MIAMI-DADE COUNTY
PRODUCT CONTROL SECTION
11805 SW 26 Street, Room 208
Miami, Florida 33175-2474
T (786) 315-2590 F (786) 315-2599
www.miamidade.gov/economy

DEPARTMENT OF REGULATORY AND ECONOMIC RESOURCES (RER)
BOARD AND CODE ADMINISTRATION DIVISION

NOTICE OF ACCEPTANCE (NOA)

Arrow United Industries
450 Riverside Drive
Wyalusing, PA 18853

SCOPE:

This NOA is being issued under the applicable rules and regulations governing the use of construction materials. The documentation submitted has been reviewed and accepted by Miami-Dade County RER-Product Control Section to be used in Miami Dade County and other areas where allowed by the Authority Having Jurisdiction (AHJ).

This NOA shall not be valid after the expiration date stated below. The Miami-Dade County Product Control Section (In Miami Dade County) and/or the AHJ (in areas other than Miami Dade County) reserve the right to have this product or material tested for quality assurance purposes. If this product or material fails to perform in the accepted manner, the manufacturer will incur the expense of such testing and the AHJ may immediately revoke, modify, or suspend the use of such product or material within their jurisdiction. RER reserves the right to revoke this acceptance, if it is determined by Miami-Dade County Product Control Section that this product or material fails to meet the requirements of the applicable building code.

This product is approved as described herein, and has been designed to comply with the Florida Building Code, including the High Velocity Hurricane Zone.

DESCRIPTION: Model EAV-66, 6" Aluminum Louver System

APPROVAL DOCUMENT: Drawing No. **1504,** titled "EAV-66 Vertical Louver System", sheets 1 through 9 of 9, dated 10/18/2006, with last revision B dated 11/08/2011, prepared by W. W. Schaefer Engineering and consulting, P.A., signed and sealed, by Warren W. Schaefer, P.E., bearing the Miami-Dade County Product Control revision stamp with the Notice of Acceptance number and expiration date by the Miami-Dade County Product Control Section.

MISSILE IMPACT RATING: Large and Small Missile Impact Resistant

LABELING: Each unit shall bear a permanent label with the manufacturer's name or logo, city, state, model/series, and following statement: "Miami-Dade County Product Control Approved", unless otherwise noted herein.

RENEWAL of this NOA shall be considered after a renewal application has been filed and there has been no change in the applicable building code negatively affecting the performance of this product.

TERMINATION of this NOA will occur after the expiration date or if there has been a revision or change in the materials, use, and/or manufacture of the product or process. Misuse of this NOA as an endorsement of any product, for sales, advertising or any other purposes shall automatically terminate this NOA. Failure to comply with any section of this NOA shall be cause for termination and removal of NOA.

ADVERTISEMENT: The NOA number preceded by the words Miami-Dade County, Florida, and followed by the expiration date may be displayed in advertising literature. If any portion of the NOA is displayed, then it shall be done in its entirety.

INSPECTION: A copy of this entire NOA shall be provided to the user by the manufacturer or its distributors and shall be available for inspection at the job site at the request of the Building Official.

This NOA **revises NOA # 11-1115.02** and consists of this page 1 and evidence pages E-1 and E-2, as well as approval document mentioned above.

The submitted documentation was reviewed by **Carlos M. Utrera, P.E.**

MIAMI-DADE COUNTY APPROVED

06/10/2014

NOA No. 14-0423.18
Expiration Date: March 15, 2017
Approval Date: June 19, 2014

NOTICE OF ACCEPTANCE: EVIDENCE SUBMITTED

A. DRAWINGS ***"Submitted under NOA # 11-1115. 02"***

1. Drawing No. **1504,** titled "EAV-66 Vertical Louver System", sheets 1 through 9 of 9, dated 10/18/2006, with last revision B dated 11/08/2011, prepared by W. W. Schaefer Engineering and consulting, P.A., signed and sealed, by Warren W. Schaefer, P.E.

B. TESTS ***"Submitted under NOA # 08-0904.01"***

1. Test report on Large Missile Test (Level E) and on Cyclic Load Test per ASTM 1886/1996 of an **EAV-66 Aluminum Louver System**, prepared by Hurricane Test Laboratories LLC., Report **# 0198-0109-07,** dated 03/08/2007, signed and sealed by Vinu J. Abraham, P .E.
2. Test report on Wind Driven Rain Test per TAS 100(A) of an EAV-66 Aluminum Louver with AFD-20 Damper, prepared by PRI Construction Materials Technologies, LLC, Test Report No. **AWV-006-02-01,** dated 02/07/2008, Duc T. Nguyen, P.E.
3. Test report on Wind Driven Rain Test per TAS 100(A) of an EAV-66 Aluminum Louver with AC-525, prepared by PRI Construction Materials Technologies, LLC, Test Report No. **AWV/AUI-006-02-01,** dated 02/14/2008, Duc T. Nguyen, P.E.

"Submitted under NOA # 06-1211.03"

4. Test report on Large Missile Impact Test per FBC, TAS 201, Cyclic Wind Pressure Test per FBC, TAS 203 and Uniform Static Air Pressure Test per FBC, TAS 202 of an EAV-66 Aluminum Louver System, prepared by Hurricane Test Laboratories, LLC,. Report No. **0198-0712-06,** dated 11/07/2006, signed and sealed by Vinu J. Abraham, P.E.

C. CALCULATIONS ***"Submitted under NOA # 11-1115. 02"***

1. Anchor calculations prepared by W.W. Schaefer Engineering and Consulting P.A., dated 11/07/2011, signed and sealed by Warren W. Schaefer, P.E.

"Submitted under NOA # 08-0904.01"

2. Anchorage, stress and deflection calculations of the Louver System with AFD-20 Dampers, sheets 1 through 4 of 4 and with AC-525/526 Dampers, sheets 1 and 2 of 2, both dated 07/22/2008, prepared by W.W. Schaefer Engineering and Consulting P.A., signed and sealed by Warren W. Schaefer, P.E.

"Submitted under NOA # 06-1211.03"

3. Anchorage calculations, 13 pages for Arrow United Industries, **Model EAV-66** Vertical Louver, prepared by W.W. Schaefer Engineering and Consulting P.A., signed and sealed on 11/07/2006 by Warren W. Schaefer, P.E.

06/10/2014

Carlos M. Utrera, P.E.
Product Control Examiner
NOA No. 14-0423.18
Expiration Date: March 15, 2017
Approval Date: June 19, 2014

NOTICE OF ACCEPTANCE: EVIDENCE SUBMITTED

D. QUALITY ASSURANCE

1. Miami-Dade Department of Regulatory and Economic Resources (RER)

E. MATERIAL CERTIFICATIONS

1. None.

F. STATEMENTS

1. Statement letter of code conformance to 2010 and 5th edition (2014) FBC issued by W.W. Schaefer Engineering and Consulting P.A., dated 04/10/2014, signed and sealed by Warren W. Schaefer, P.E.

   "Submitted under NOA # 11-1115.02"

2. No financial interest letter from W.W. Schaefer Engineering and Consulting P.A., dated 11/08/2011, signed and sealed by Warren W. Schaefer, P.E.

06/10/2014

Carlos M. Utrera, P.E.
Product Control Examiner
NOA No. 14-0423.18
Expiration Date: March 15, 2017
Approval Date: June 19, 2014

GENERAL NOTES:

1. IT SHALL BE THE RESPONSIBILITY OF THE PERMIT HOLDER TO VERIFY THE STRUCTURAL INTEGRITY OF THE EXISTING STRUCTURE TO SUPPORT THE LOADS SUPERIMPOSED BY THE LOUVERS.
2. THESE LOUVER SYSTEMS HAVE BEEN DESIGNED & TESTED IN ACCORDANCE WITH THE FLORIDA BUILDING CODE (FBC) AND PROTOCOLS TAS-100, 201, 202 & 203 INCLUDING HIGH VELOCITY HURRICANE ZONES (HVHZ).
3. EACH LOUVER ASSEMBLY SHALL BE PERMANENTLY LABELED AS FOLLOWS: ARROW UNITED INDUSTRIES
   WYALUSING, PA
   MIAMI-DADE COUNTY PRODUCT CONTROL APPROVED
4. ALL CONCRETE SUBSTRATE SHALL BE MIN. 3000 PSI.
5. ALL WOOD SUBSTRATE SHALL BE MIN. G = 0.55 DENSITY.
6. ALL METAL STUD SUBSTRATE SHALL BE MIN. 16 GA. Fy = 33 ksi.
7. ALL STRUCTURAL STEEL SUBSTRATE SHALL BE MIN. 12 GA. Fy = 36 ksi.
8. INDIVIDUAL PANEL WIDTHS ARE UNLIMITED IN DIMENSION. PANEL HEIGHTS ARE LIMITED BY THE DIMENSIONS SHOWN IN THE ELEVATIONS.
9. INDIVIDUAL PANELS MAY BE STACKED HORIZONTALLY IN AN UNLIMITED QUANTITY. IT IS THE RESPONSIBILITY OF THE SUPPORTING STRUCTURES DESIGN ENGINEER/ARCHITECT TO INSURE THE SUPPORTING STRUCTURE WILL SUPPORT ALL DESIGN LOADS TRANSFERED BY THE LOUVERS.
10. MATERIALS, INCLUDING BUT NOT LIMITED TO STEEL SCREWS, THAT COME INTO CONTACT WITH OTHER DISSIMILAR MATERIALS SHALL MEET THE REQUIREMENTS OF FLORIDA BUILDING CODE CHAPTER 20.
11. THESE LOUVERS HAVE PASSED TESTING IN ACCORDANCE WITH ASTM E1886 & E1996 FOR ESSENTIAL FACILITIES LEVEL "E" 80 FT/S LARGE MISSILE IMPACT SPEED. THEREFORE, THESE LOUVER SYSTEMS ARE APPROVED FOR USE WITH ESSENTIAL FACILITIES.
12. THIS SYSTEM HAS BEEN TESTED FOR WATER INFILTRATION RESISTANCE AND IS A WATER RESISTANT SYSTEM WHEN AN AFD-20 OR AC525/526 DAMPER IS INSTALLED WITH THE LOUVER PANEL.
13. UNLESS THE AFD-20 OR AC525/526 DAMPER IS ATTACHED TO THE LOUVER, THE LOUVER IS TO BE INSTALLED IN A LOCATION WHERE THE ROOM BEHIND THE LOUVER IS DESIGNED TO DRAIN WATER PENETRATING INTO THE ROOM, AND THE ROOM WILL HOUSE WATER RESISTANT/WATER PROOF EQUIPMENT, COMPONENTS OR SUPPLIES.

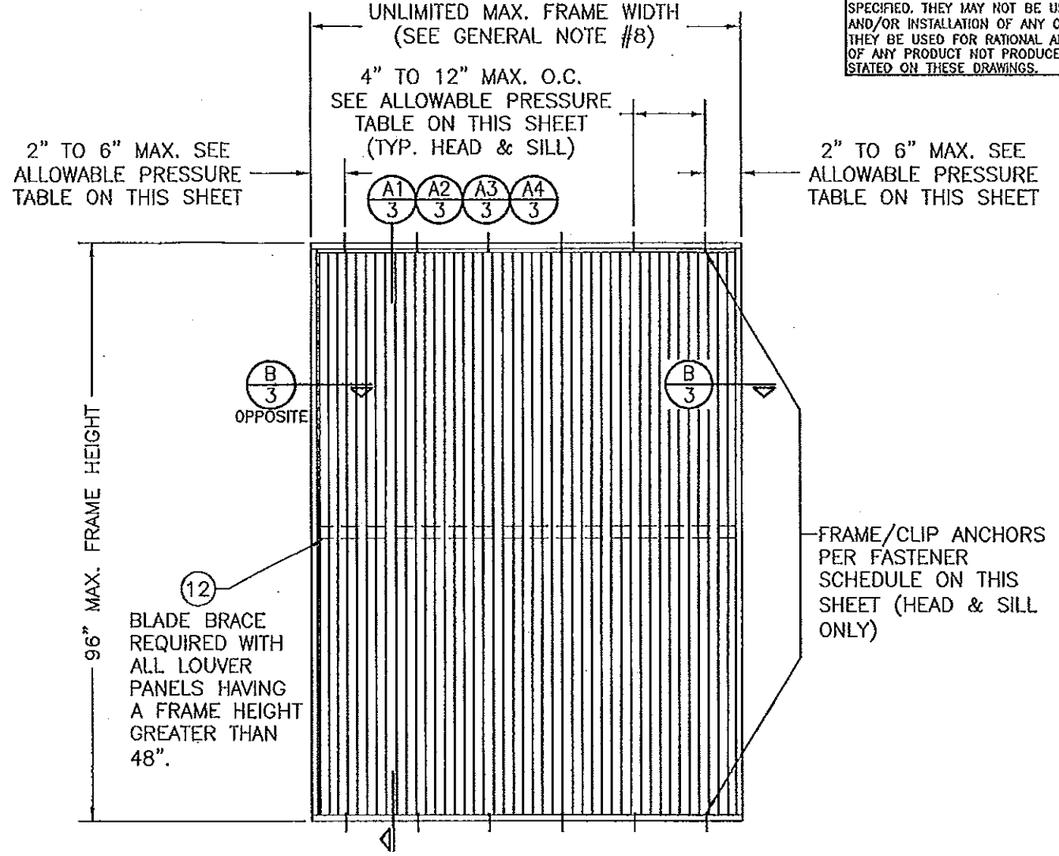

EXTERIOR ELEVATION
SINGLE LOUVER PANEL
(ARCHITECTURAL & NON-ARCHITECTURAL)
SCALE: 1/2" = 1'-0"

CORNER & BLADE END CONSTRUCTION

BLADE TO HEAD & SILL:
BLADE END IS SQUARE CUT, BUTTED AND JOINED TO HEAD AND SILL WITH TWO NO. 8 X 1" S.S. SMS SCREWS PER BLADE END.
HEAD & SILL TO JAMB:
SIDE JAMB IS SQUARE CUT, BUTTED AND JOINED TO HEAD AND SILL WITH TWO 1/4" X 1" SELF TAPPING SCREWS.

FASTENER SCHEDULE

ANCHOR TYPE	(4) SUBSTRATE	MINIMUM EMBEDMENT	MINIMUM EDGE DIST.
(3) NO. 10 S.S. SCREW	WOOD	1 1/4"	3/4"
(5) NO. 10-16 SELF TAPPING/DRILLING SCREW	METAL STUD	FULL	3/4"
(1) 1/4" CONCRETE SCREW	CONCRETE	1 1/2"	2"
(2) 1/4" BOLT	STEEL OR METAL STUD	FULL	3/4"
(5) 1/4-20 OR 1/4-14 SELF TAPPING/DRILLING SCREW	STEEL	FULL	3/4"

(1) CONCRETE SCREWS SHALL BE ELCO ULTRACONS, ELCO CRETE-FLEX, ITW RAMSET/RED HEAD TAPCONS OR HILTI KWIK-CON II (HARDENED STEEL OR S.S.).
(2) BOLT SHALL BE MIN. A307 GALVANIZED OR 304 S.S. (Fv = 10,000 PSI MIN.)
(3) SMS WOOD SCREWS SHALL HAVE MIN. YIELD STRENGTH OF Fyb = 80,000 PSI
(4) SEE GENERAL NOTES FOR SUBSTRATE REQUIREMENTS.
(5) SELF TAPPING SCREWS SHALL BE CORROSION RESISTANT MIN. SAE GRADE 2 STEEL OR MIN. ALLOY GROUP 1, 2 & 3 CONDITION "A" STAINLESS STEEL.

(2) ALLOWABLE DESIGN PRESSURE & ANCHOR SPACING REQUIREMENTS (LOUVER PANELS)

(1) MAX. ANCHOR SPACING	(1) MAX. ANCHOR END DISTANCE	ALLOWABLE PRESSURE
4"	2"	+/-150 PSF
8"	4"	+/-75 PSF
12"	6"	+/-50 PSF

(1) WHEN LOUVERS ARE USED TO PROTECT ESSENTIAL FACILITIES, MAX. ANCHOR SPACING SHALL NOT EXCEED 4" & MAX. ANCHOR END DISTANCE SHALL NOT EXCEED 2" REGARDLESS OF PRESSURE REQUIRED.
(2) FOR ALLOWABLE PRESSURE ON DAMPERS, SEE SHEET 5 OR 7.

PRODUCT REVISED
as complying with the Florida Building Code
Acceptance No 14-0923.18
Expiration Date 03/15/2017
By
Miami Dade Product Control

PRODUCT RENEWED
as complying with the Florida Building Code
Acceptance No 11-1115.02
Expiration Date 03/15/2017
By
Miami Dade Product Control

WARREN W. SCHAEFER P.E. LICENSE No. 44135 STATE OF FLORIDA PROFESSIONAL ENGINEER

THESE DRAWINGS ARE APPLICABLE ONLY TO THE PRODUCT SPECIFIED. THEY MAY NOT BE USED FOR THE ASSEMBLY AND/OR INSTALLATION OF ANY OTHER PRODUCT NOR MAY THEY BE USED FOR RATIONAL AND/OR LOCAL APPROVAL OF ANY PRODUCT NOT PRODUCED BY THE MANUFACTURER STATED ON THESE DRAWINGS.

DRAWN BY: W.R.M. | CHECKED BY: W.W.S.
PLOT: 1:1.24 | DATE: 10/18/05

NO.	REVISION DESCRIPTION	BY	DATE
A1	UPDATE TO PRESENT STANDARDS	W.W.S.	07/14/08
A2	ADDED DAMPER CONDITIONS	W.W.S.	07/14/08
A3	ADDED ESSENTIAL FACILITIES USE	W.W.S.	07/14/08
B	UPDATE TO CURRENT STANDARDS	W.R.M.	11/06/11

DRAWING TITLE: EAV-66 VERTICAL LOUVER SYSTEM

MANUFACTURER
ARROW UNITED INDUSTRIES
450 RIVERSIDE DRIVE
WYALUSING, PA 18853
570-746-1888

CONSULTANTS
W. W. SCHAEFER ENGINEERING & CONSULTING, P.A. (CA 6809)
7480 150TH COURT NORTH
PALM BEACH GARDENS, FL 33418
PHONE 561-744-3424

CERTIFICATION
NOV 08 2011
WARREN W. SCHAEFER, P.E.
P.E. NO. 44135

DRAWING NO. 1504 | REV. B
SHEET NO. 1 OF 9

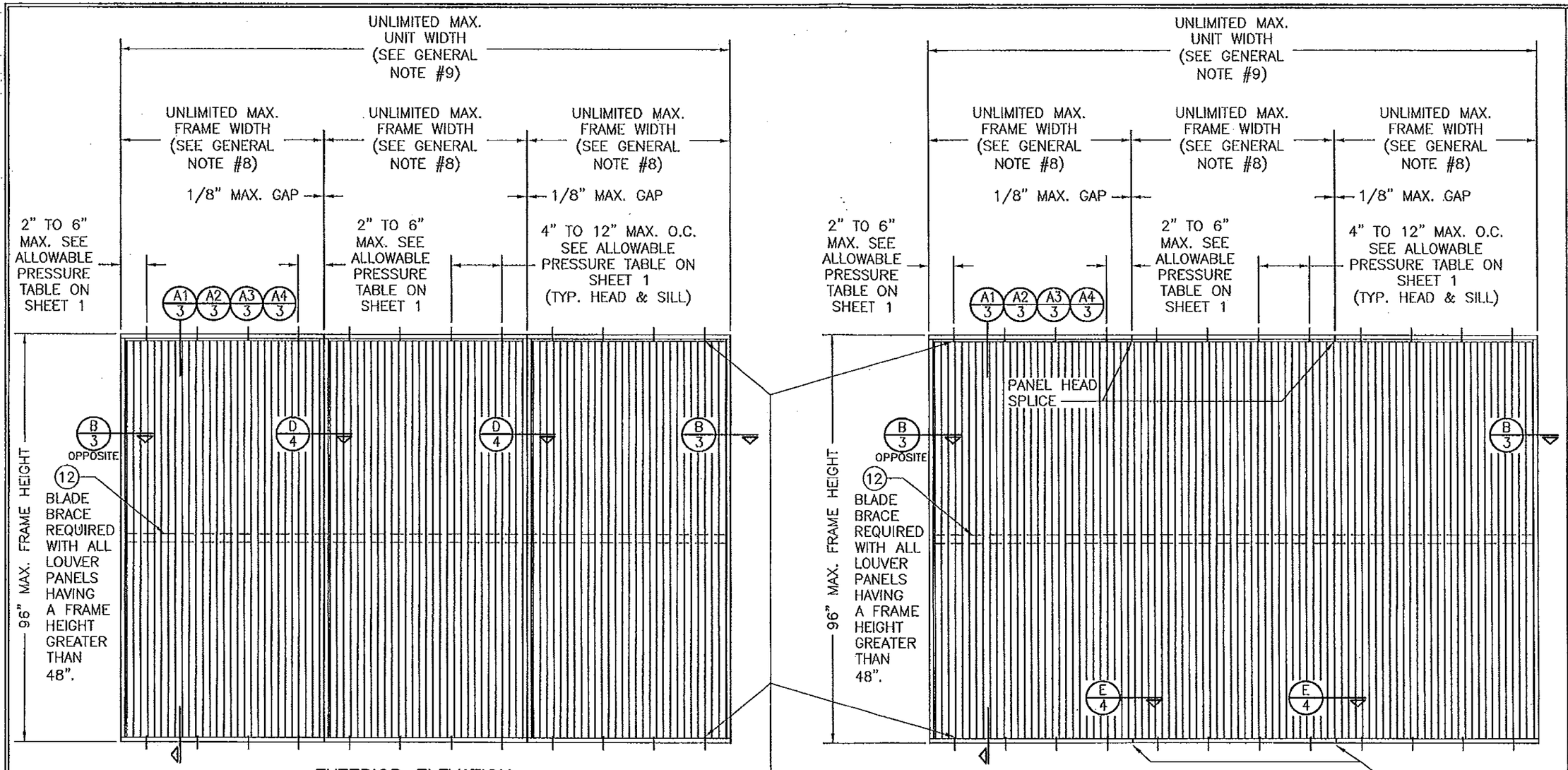

EXTERIOR ELEVATION
MULTIPLE LOUVER PANELS
(NON-ARCHITECTURAL)
SCALE: 1/2" = 1'-0"

EXTERIOR ELEVATION
MULTIPLE LOUVER PANELS
(ARCHITECTURAL)
SCALE: 1/2" = 1'-0"

PRODUCT REVISED
as complying with the Florida Building Code
Acceptance No 14-0423.18
Expiration Date 03/15/2017
By _____
Miami Dade Product Control

PRODUCT RENEWED
as complying with the Florida Building Code
Acceptance No 11-1115.02
Expiration Date 03/15/2017
By _____
Miami Dade Product Control

WARREN W. SCHAEFER LICENSE No. 44135 STATE OF FLORIDA PROFESSIONAL ENGINEER

NO.	REVISION DESCRIPTION	BY	DATE

DRAWN BY: W.R.M. | CHECKED BY: W.W.S.
PLOT: 1=24 | DATE: 10/18/06

DRAWING TITLE: EAV-66 VERTICAL LOUVER SYSTEM

MANUFACTURER: ARROW UNITED INDUSTRIES
450 RIVERSIDE DRIVE
WYALUSING, PA 18853
570-746-1888

CONSULTANTS: W. W. SCHAEFER ENGINEERING & CONSULTING, P.A. (CA 6809)
7480 150TH COURT NORTH
PALM BEACH GARDENS, FL 33418
PHONE: 561-744-3424

CERTIFICATION
NOV 08 2011
WARREN W. SCHAEFER, P.E.
P.E. NO. 44135

DRAWING NO. 1504 | REV. B
SHEET NO. 2 OF 9

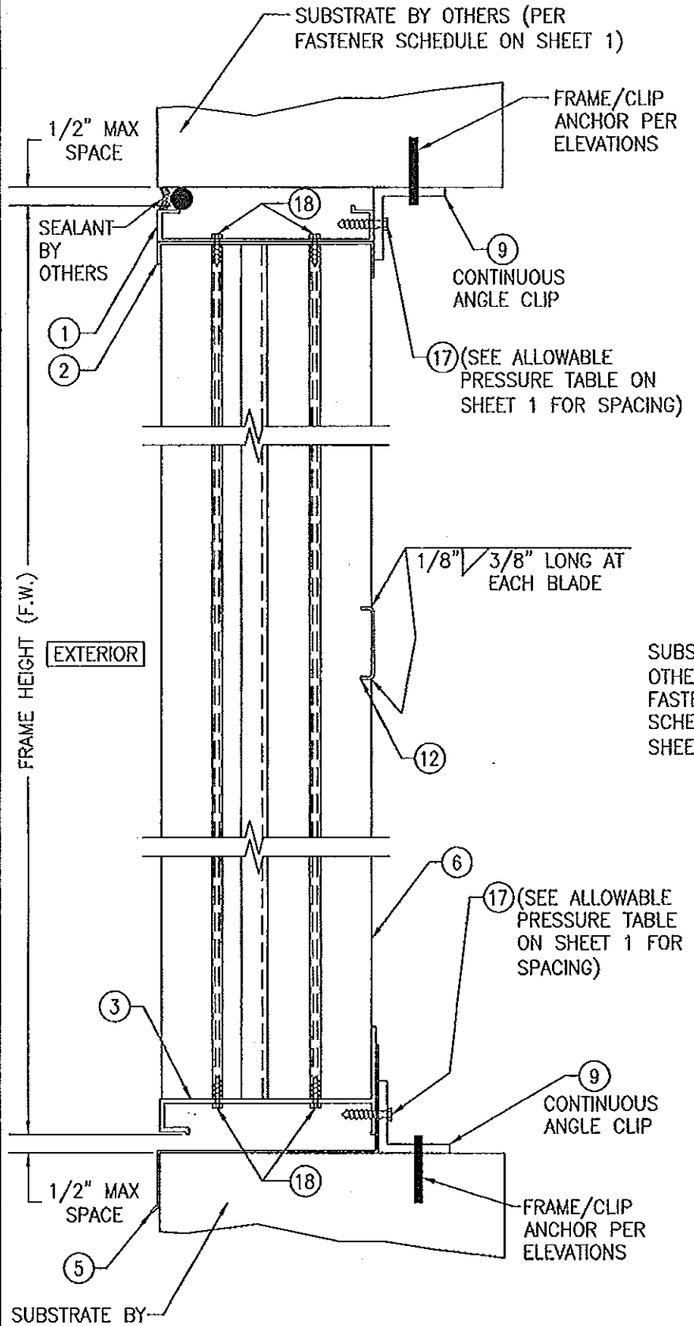

SECTION A1/3
SCALE: 1/4 FULL
(STANDARD MOUNT CONDITION WITH CLIP TURNED OUT)

PRODUCT REVISED
as complying with the Florida Building Code
Acceptance No 14-0122.18
Expiration Date 03/15/2017
By
Miami-Dade Product Control

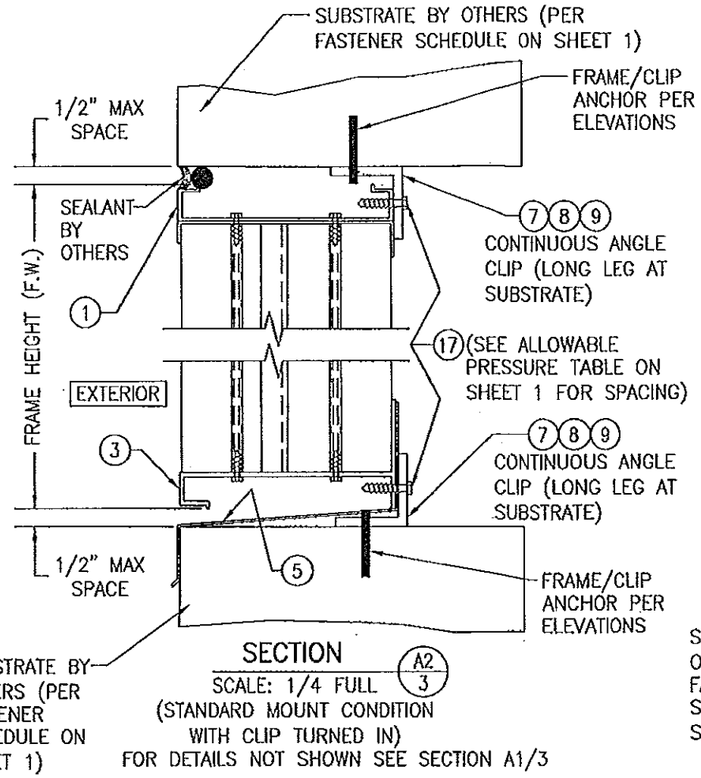

SECTION A2/3
SCALE: 1/4 FULL
(STANDARD MOUNT CONDITION WITH CLIP TURNED IN)
FOR DETAILS NOT SHOWN SEE SECTION A1/3

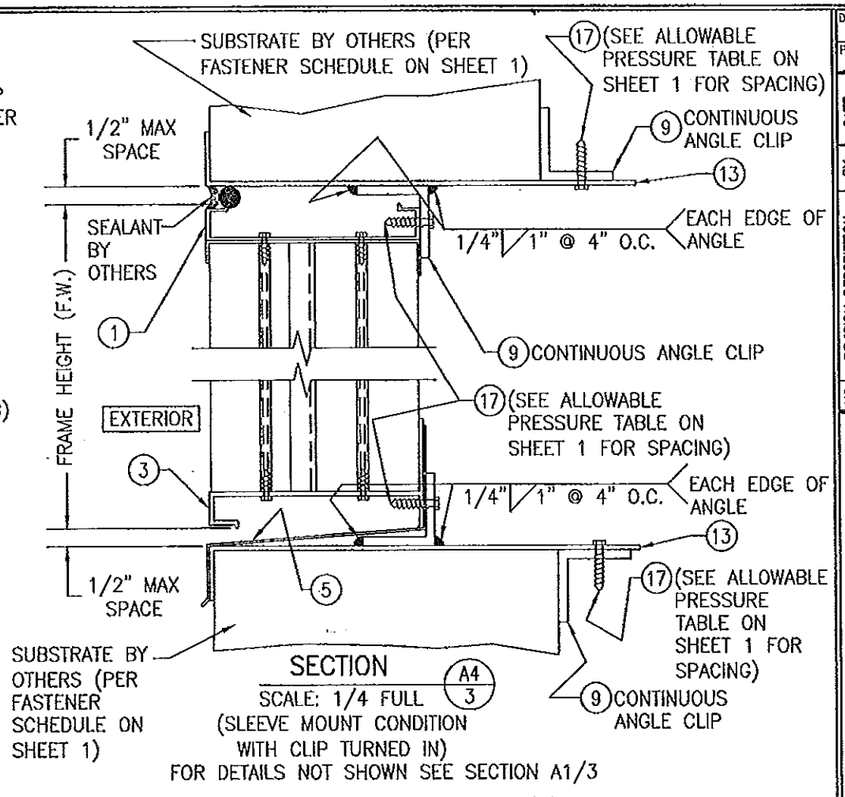

SECTION A4/3
SCALE: 1/4 FULL
(SLEEVE MOUNT CONDITION WITH CLIP TURNED IN)
FOR DETAILS NOT SHOWN SEE SECTION A1/3

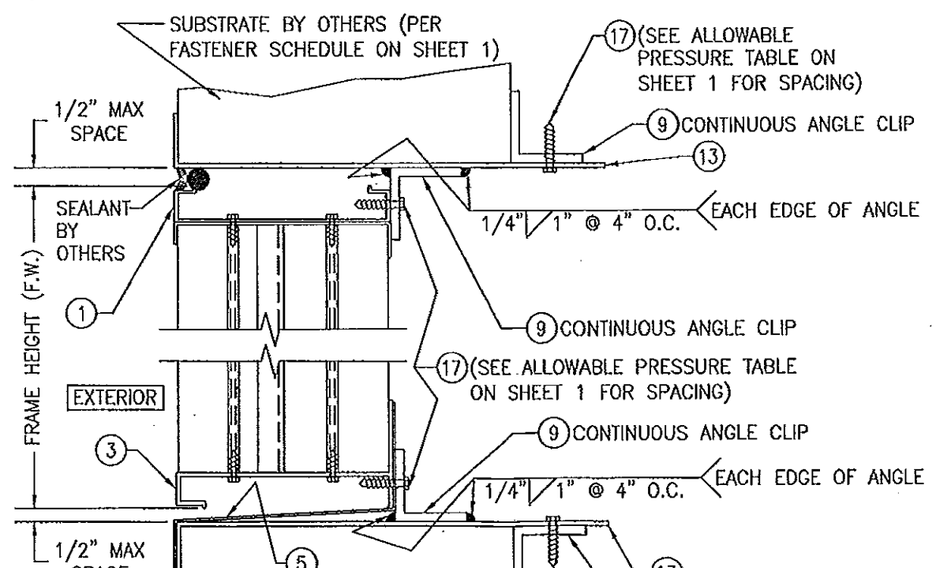

SECTION A3/3
SCALE: 1/4 FULL
(SLEEVE MOUNT CONDITION WITH CLIP TURNED OUT)
FOR DETAILS NOT SHOWN SEE SECTION A1/3

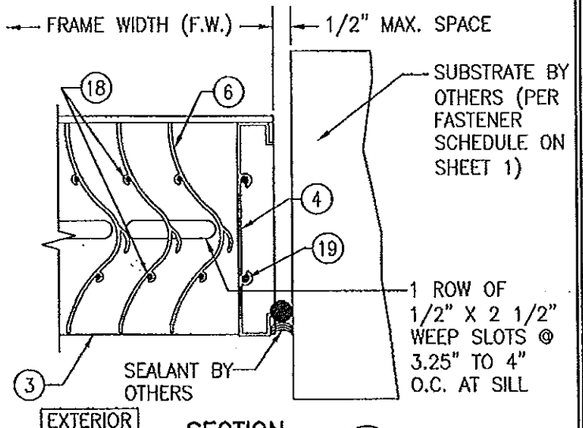

SECTION B/3
SCALE: 1/4 FULL

PRODUCT RENEWED
as complying with the Florida Building Code
Acceptance No 11-1115.02
Expiration Date 03/15/2017
By
Miami-Dade Product Control

WARREN W. SCHAEFER LICENSE No. 44135 STATE OF FLORIDA PROFESSIONAL ENGINEER

NOV 08 2011

WARREN W. SCHAEFER, P.E. No. 44135

CERTIFICATION

NO.	REVISION DESCRIPTION	BY	DATE

DRAWN BY: W.R.M. | CHECKED BY: W.W.S.
PLOT: 1=4 | DATE: 10/18/08

DRAWING TITLE
EAV-66 VERTICAL LOUVER SYSTEM

MANUFACTURER
ARROW UNITED INDUSTRIES
450 RIVERSIDE DRIVE
WYALUSING, PA 18853
570-746-1888

CONSULTANTS
W. W. SCHAEFER ENGINEERING & CONSULTING, P.A. (CA 6809)
7480 150TH COURT NORTH
PALM BEACH GARDENS, FL 33418
PHONE: 561-744-3424

DRAWING NO. 1504 | REV. B
SHEET NO. 3 OF 9

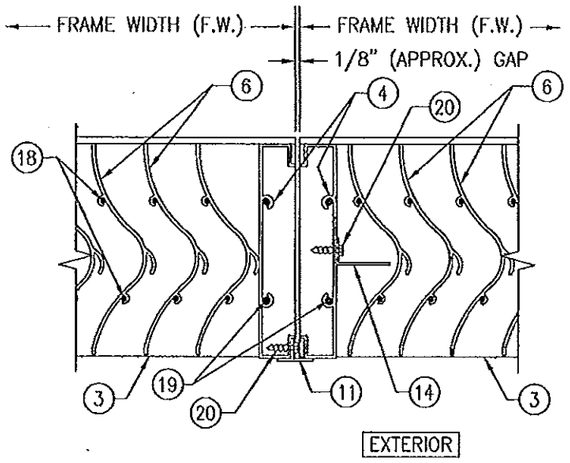

SECTION
SCALE: 1/4 FULL (D/4)

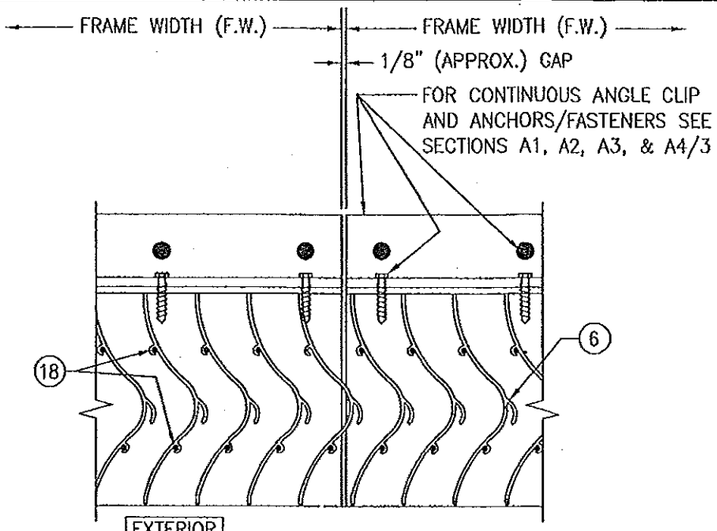

SECTION
SCALE: 1/4 FULL (E/4)

ITEM #	ITEM DESCRIPTION	MANUFACTURER/NOTES
	PARTS	
1	HEAD FRAME "A"	6063-T6 ALUMINUM
2	HEAD FRAME "B"	6063-T5 ALUMINUM
3	SILL FRAME	6063-T6 ALUMINUM
4	JAMB	6063-T6 ALUMINUM
5	SILL PAN	5052-H32 ALUMINUM
6	VERTICAL BLADE	6063-T6 ALUMINUM
7	CONTINUOUS MOUNTING CLIP	6063-T5 ALUMINUM
8	CONTINUOUS MOUNTING CLIP	6063-T5 ALUMINUM
9	CONTINUOUS MOUNTING CLIP	6063-T5 ALUMINUM
10	OPTIONAL FRAME FLANGE	6063-T52/T6 ALUMINUM
11	MULLION COVER	6063-T52/T6 ALUMINUM
12	BLADE RETAINER CHANNEL	5052-H32 ALUMINUM
13	MOUNTING SLEEVE	5052-H32 ALUMINUM
14	SIGHT-PROOF ANGLE	6063-T5 ALUMINUM
	MISC. FASTENERS	
17	NO. 14 X 1 1/4" 410 SS TEK SCREW	FOR SPACING REQUIREMENTS SEE ALLOWABLE PRESSURE TABLE ON SHEET 1
18	NO. 8 X 1" 18-8 SS SMS SCREW	2 PER BLADE END
19	1/4" X 1" 410 S.S. SELF TAPPING SCREW	2 PER FRAME CORNER
20	NO. 8 X 3/4" 18-8 SS SMS SCREW	2" FROM ENDS & 15° O.C.

PRODUCT REVISED
as complying with the Florida Building Code
Acceptance No 14-0423.18
Expiration Date 03/15/2017
By
Miami Dade Product Control

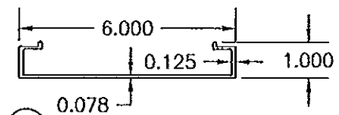

1 HEAD FRAME "A"

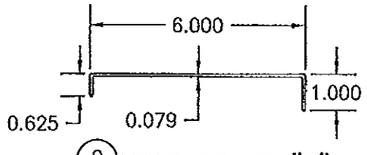

2 HEAD FRAME "B"

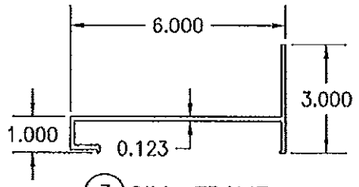

3 SILL FRAME

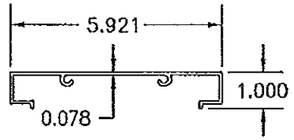

4 JAMB

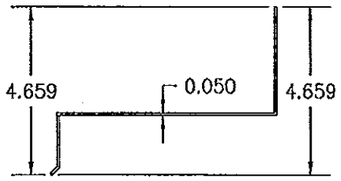

5 SILL PAN

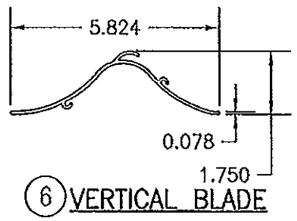

6 VERTICAL BLADE

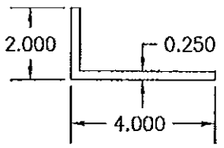

7 CONTINUOUS MOUNTING CLIP

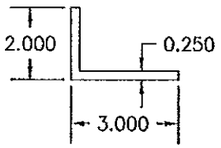

8 CONTINUOUS MOUNTING CLIP

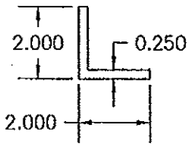

9 CONTINUOUS MOUNTING CLIP

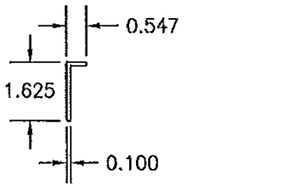

10 OPTIONAL FRAME FLANGE

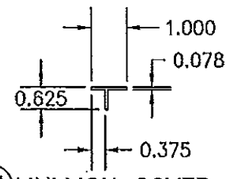

11 MULLION COVER

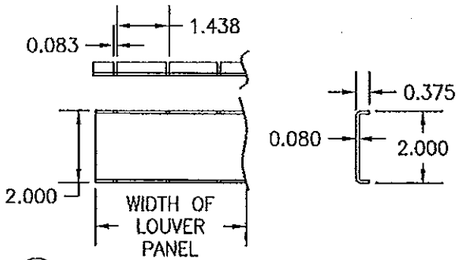

12 BLADE RETAINER CHANNEL

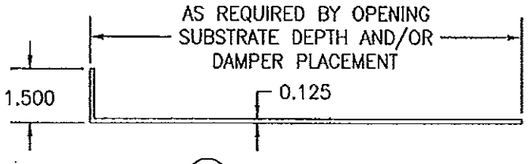

13 MOUNTING SLEEVE

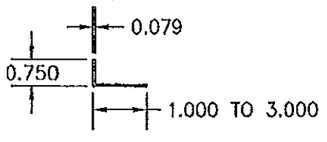

14 SIGHT-PROOF ANGLE

PRODUCT RENEWED
as complying with the Florida Building Code
Acceptance No 11-1115.02
Expiration Date 03/15/2017
By
Miami Dade Product Control

WARREN W. SCHAEFER LICENSE No. 44135 STATE OF FLORIDA PROFESSIONAL ENGINEER

DRAWN BY: W.R.U.	CHECKED BY: W.W.S.
PLOT: 1=4	DATE: 10/18/08

NO.	REVISION DESCRIPTION	BY	DATE

DRAWING TITLE
EAV-66 VERTICAL LOUVER SYSTEM

MANUFACTURER
ARROW UNITED INDUSTRIES
450 RIVERSIDE DRIVE
WYALUSING, PA 18853
570-746-1888

CONSULTANTS
W. W. SCHAEFER ENGINEERING & CONSULTING, P.A. (CA 6809)
7480 150TH COURT NORTH
PALM BEACH GARDENS, FL 33418
PHONE: 561-744-3424

CERTIFICATION
NOV 08 2011
WARREN W. SCHAEFER, P.E.
P.E. NO. 44135

DRAWING NO. 1504 | REV. B
SHEET NO. 4 OF 9

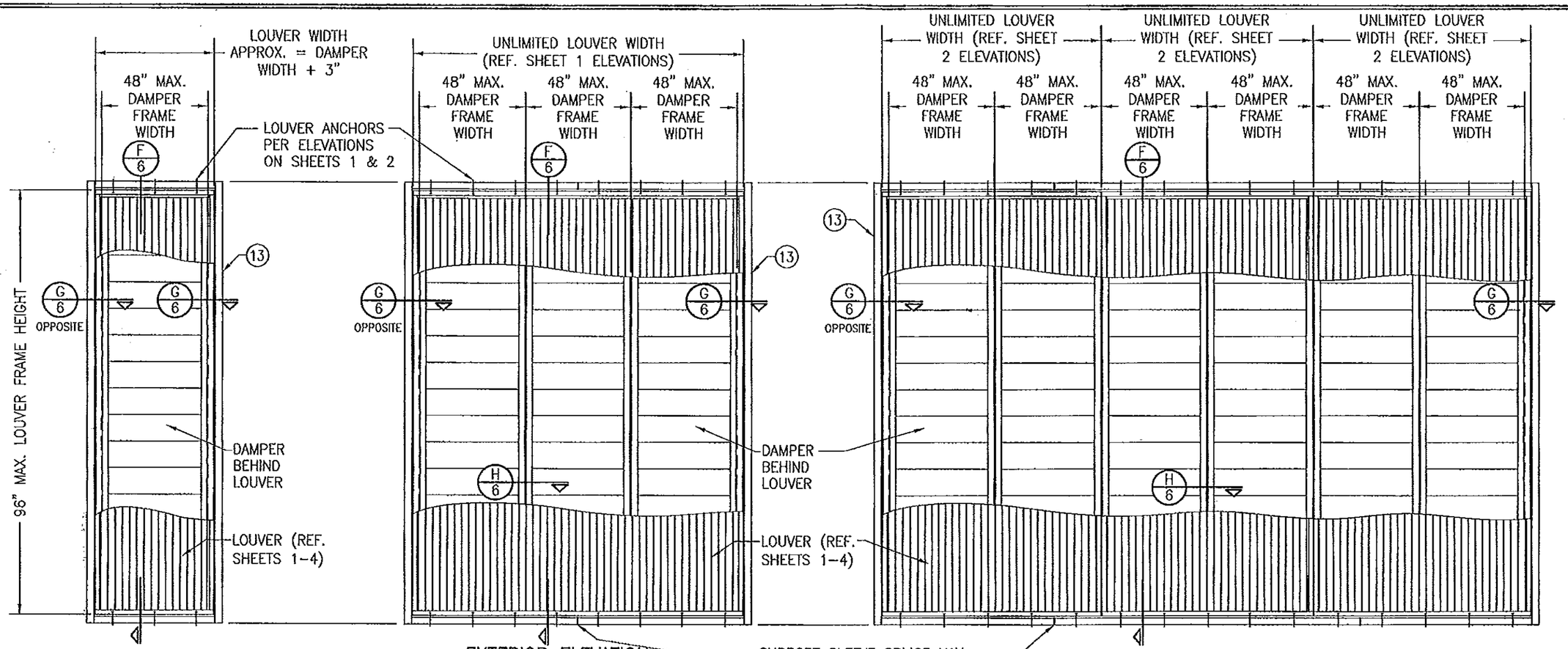

EXTERIOR ELEVATION:
SINGLE LOUVER PANEL WITH A SINGLE AFD-20 DAMPER

SCALE: 1/2" = 1'-0"

EXTERIOR ELEVATION:
SINGLE LOUVER PANEL WITH MULTIPLE AFD-20 DAMPERS

SCALE: 1/2" = 1'-0"

1) NUMBER OF DAMPERS BEHIND A LOUVER PANEL IS UNLIMITED.
2) EACH INDIVIDUAL DAMPER PANEL IS LIMITED TO A 48" FRAME WIDTH.

EXTERIOR ELEVATION:
MULTIPLE LOUVER PANELS WITH MULTIPLE AFD-20 DAMPERS

SCALE: 1/2" = 1'-0"

1) NON-ARCHITECTURAL LOUVERS SHOWN. ARCHITECTURAL LOUVERS ALSO APPLY.
2) MORE THAN 1 DAMPER MAY BE PLACED BEHIND EACH LOUVER PANEL.
3) DAMPER MULLIONS/SEAMS DO NOT HAVE TO ALIGN WITH LOUVER PANEL SEAMS.
4) EACH INDIVIDUAL DAMPER PANEL IS LIMITED TO A 48" FRAME WIDTH.

ALLOWABLE DESIGN PRESSURE (AFD-20 DAMPERS)

MAX. DAMPER FRAME HEIGHT (IN.)	MAX. DAMPER FRAME WIDTH (1) (IN.)	ALLOWABLE PRESSURE (+/- PSF)
90.5	48	90.1
	42	103.0
	36	120.1
	30	144.2
	28	150.0
84.5	48	104.2
	42	119.0
	36	138.9
	33	150.0
78.5	48	113.0
	42	129.1
	36	150.0
72.5	48	122.3
	42	139.8
	38	150.0
66.5	48	133.4
	42	150.0
60.5	48	146.6
	46	150.0

(1) DAMPER FRAME HEIGHT IS APPROXIMATELY 5.5" LESS THAN THE LOUVER FRAME HEIGHT.

DAMPER CORNER CONSTRUCTION (AFD-20): HEAD AND SILL ARE BUTTED TO THE SIDE JAMBS, SECURED WITH 4 NO. 7 X 1" SELF TAPPING 410 S.S. SCREWS AND SEALED WITH SEALANT.

SLEEVE CORNER CONSTRUCTION: SIDE MEMBERS ARE JOINED & FULLY WELDED TO HEAD & SILL MEMBERS

PRODUCT REVISED
as complying with the Florida Building Code
Acceptance No 14-0423.18
Expiration Date 2/15/2017
By
Miami Dade Product Control

PRODUCT RENEWED
as complying with the Florida Building Code
Acceptance No 11-1115.02
Expiration Date 2/15/2017
By
Miami Dade Product Control

WARREN W. SCHAEFER LICENSE No. 44135 STATE OF FLORIDA PROFESSIONAL ENGINEER

DRAWN BY: W.R.M. | CHECKED BY: W.W.S.
PLOT: 1-24 | DATE: 10/18/08

NO.	REVISION DESCRIPTION	BY	DATE

DRAWING TITLE: EAV-66 VERTICAL LOUVER SYSTEM

MANUFACTURER
ARROW UNITED INDUSTRIES
450 RIVERSIDE DRIVE
WYALUSING, PA 18853
570-746-1888

CONSULTANTS
W. W. SCHAEFER ENGINEERING & CONSULTING, P.A. (CA 6809)
7480 150TH COURT NORTH
PALM BEACH GARDENS, FL 33418
PHONE: 561-744-3424

CERTIFICATION
NOV 08 2011
WARREN W. SCHAEFER P.E.
P.E. NO. 44135

DRAWING NO. 1504 | REV. B
SHEET NO. 5 OF 9

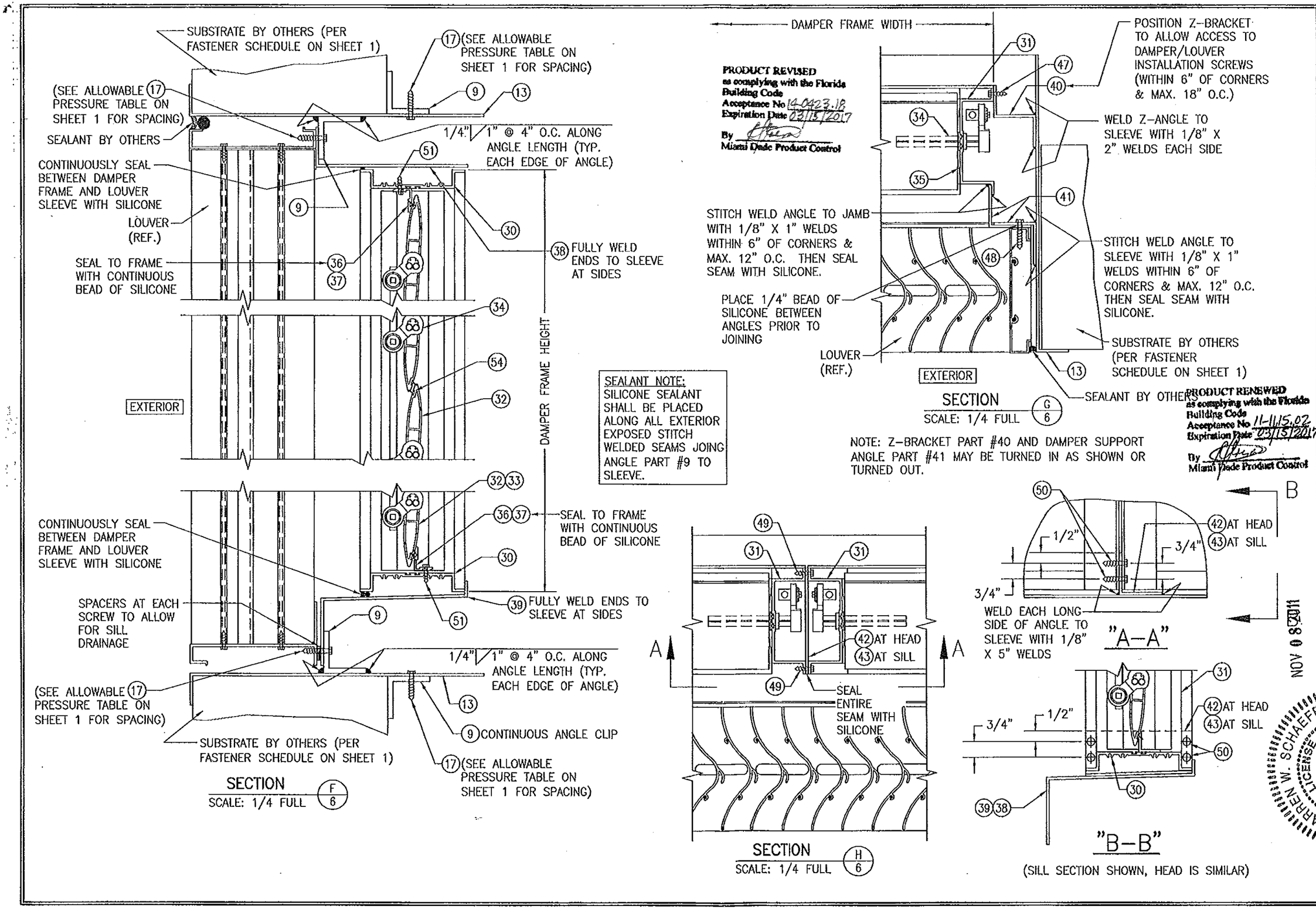

PRODUCT REVISED as complying with the Florida Building Code Acceptance No 14-0423.18 Expiration Date 03/15/2017 By Miami Dade Product Control

PRODUCT RENEWED as complying with the Florida Building Code Acceptance No 11-1115.02 Expiration Date 03/15/2017 By Miami Dade Product Control

NOV 0 8 2011

DRAWN BY: W.R.M.	CHECKED BY: W.W.S.
PLOT: 1=4	DATE: 10/18/06

NO.	REVISION DESCRIPTION	BY	DATE

DRAWING TITLE: EAV-66 VERTICAL LOUVER SYSTEM

MANUFACTURER: ARROW UNITED INDUSTRIES, 450 RIVERSIDE DRIVE, WYALUSING, PA 18853, 570-746-1888

CONSULTANTS: W. SCHAEFER ENGINEERING & CONSULTING, P.A. (CA 6809), 7480 150TH COURT NORTH, PALM BEACH GARDENS, FL 33418, PHONE: 561-744-3424

WARREN W. SCHAEFER LICENSE CERTIFICATION STATE OF FLORIDA PROFESSIONAL ENGINEER

DRAWING NO. 1504 REV. B

SHEET NO. 6 OF 9

SUPPORT SLEEVE SPLICE MAY OCCUR MID-WAY BETWEEN ANCHORS AT ANY LOCATION PROVIDING NO SLEEVE SECTION LENGTH IS LESS THAN THE DAMPER PANEL FRAME WIDTHS. SPLICING OF SLEEVES SHALL BE DONE IN A MANNER THAT DOES NOT ALLOW WATER LEAKAGE THROUGH THE SPLICE.

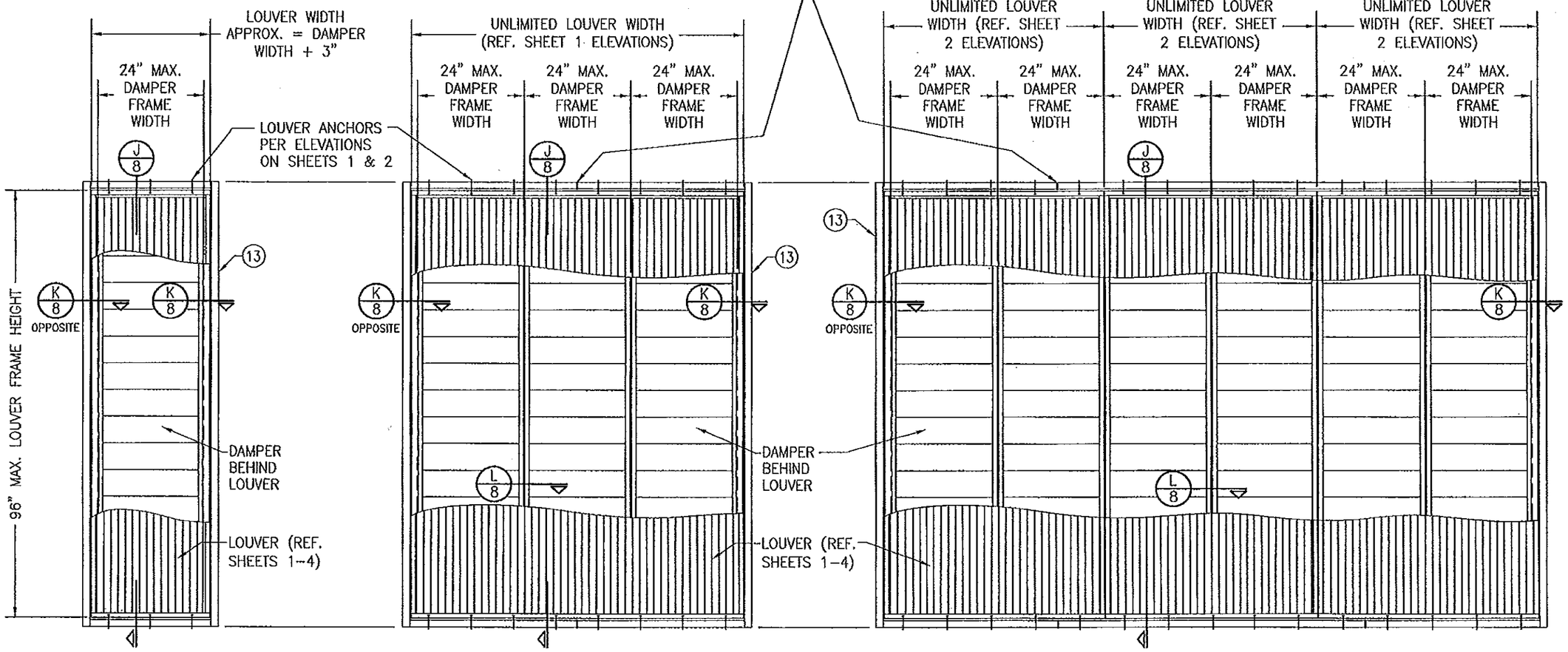

EXTERIOR ELEVATION:
SINGLE LOUVER PANEL WITH A SINGLE AC-525/526 DAMPER

SCALE: 1/2" = 1'-0"

EXTERIOR ELEVATION:
SINGLE LOUVER PANEL WITH MULTIPLE AC-525/526 DAMPERS

SCALE: 1/2" = 1'-0"

1) NUMBER OF DAMPERS BEHIND A LOUVER PANEL IS UNLIMITED.
2) EACH INDIVIDUAL DAMPER PANEL IS LIMITED TO A 24" FRAME WIDTH.

EXTERIOR ELEVATION:
MULTIPLE LOUVER PANELS WITH MULTIPLE AC-525/526 DAMPERS

SCALE: 1/2" = 1'-0"

1) NON-ARCHITECTURAL LOUVERS SHOWN. ARCHITECTURAL LOUVERS ALSO APPLY.
2) MORE THAN 1 DAMPER MAY BE PLACED BEHIND EACH LOUVER PANEL.
3) DAMPER MULLIONS/SEAMS DO NOT HAVE TO ALIGN WITH LOUVER PANEL SEAMS.
4) EACH INDIVIDUAL DAMPER PANEL IS LIMITED TO A 24" FRAME WIDTH.

DAMPER CORNER CONSTRUCTION (AC-525/526): HEAD AND SILL ARE BUTTED TO THE SIDE JAMBS, SECURED WITH 4 NO. 8 X 3/4" 410 S.S. SHEET METAL SCREWS AND SEALED WITH SEALANT.

SLEEVE CORNER CONSTRUCTION: SIDE MEMBERS ARE JOINED & FULLY WELDED TO HEAD & SILL MEMBERS

ALLOWABLE DESIGN PRESSURE (AC-525/526 DAMPERS)
+150/-150 PSF

PRODUCT REVISED
as complying with the Florida Building Code
Acceptance No 14-1122.18
Expiration Date 03/15/2017
By
Miami Dade Product Control

PRODUCT RENEWED
as complying with the Florida Building Code
Acceptance No 11-1115.02
Expiration Date 03/15/2017
By
Miami Dade Product Control

WARREN W. SCHAEFER LICENSE No. 44135 STATE OF FLORIDA PROFESSIONAL ENGINEER

DRAWN BY: W.R.M.	CHECKED BY: W.W.S.
PLOT: 1=24	DATE: 10/18/06

NO.	REVISION DESCRIPTION	BY	DATE

DRAWING TITLE: EAV-66 VERTICAL LOUVER SYSTEM

MANUFACTURER
ARROW UNITED INDUSTRIES
450 RIVERSIDE DRIVE
WYALUSING, PA 18853
570-746-1888

CONSULTANTS
W. W. SCHAEFER ENGINEERING & CONSULTING, P.A. (CA 6809)
7480 150TH COURT NORTH
PALM BEACH GARDENS, FL 33418
PHONE: 561-744-3424

CERTIFICATION
NOV 08 2011
WARREN W. SCHAEFER, P.E.
P.E. NO. 44135

DRAWING NO. 1504 | REV. B
SHEET NO. 7 OF 9

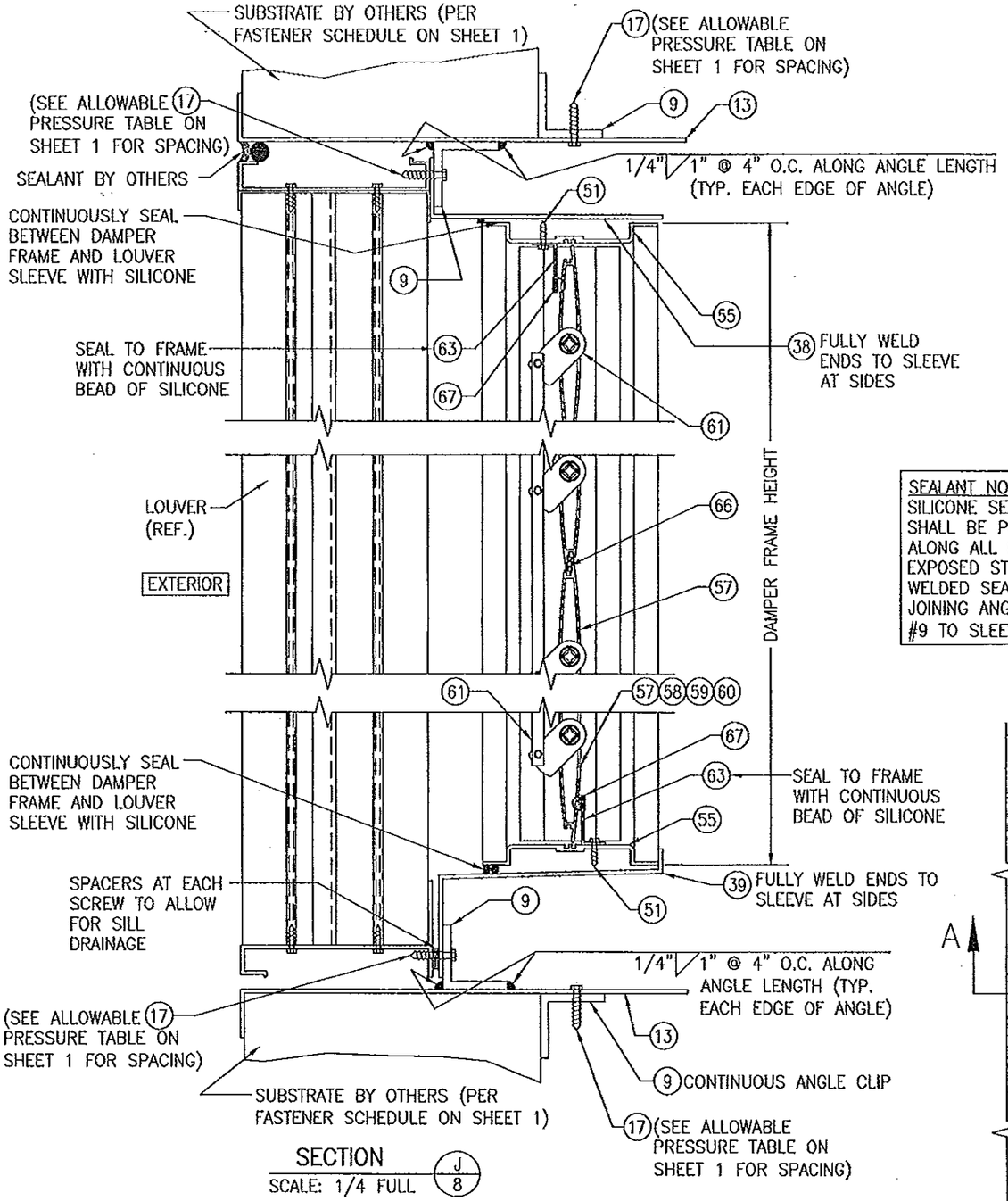

SECTION (J/8)
SCALE: 1/4 FULL

PRODUCT REVISED
as complying with the Florida Building Code
Acceptance No 14-0423.18
Expiration Date 03/15/2017
By
Miami Dade Product Control

SEALANT NOTE:
SILICONE SEALANT SHALL BE PLACED ALONG ALL EXTERIOR EXPOSED STITCH WELDED SEAMS JOINING ANGLE PART #9 TO SLEEVE.

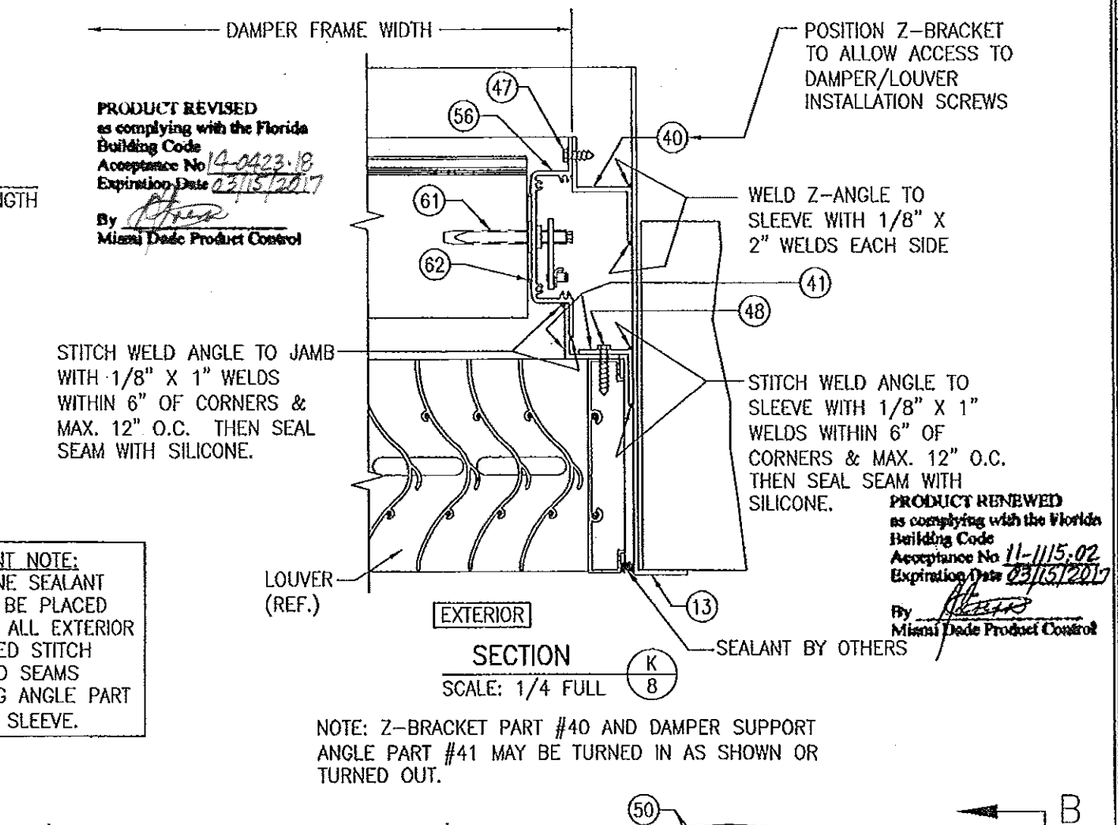

SECTION (K/8)
SCALE: 1/4 FULL

PRODUCT RENEWED
as complying with the Florida Building Code
Acceptance No 11-1115.02
Expiration Date 03/15/2017
By
Miami Dade Product Control

NOTE: Z-BRACKET PART #40 AND DAMPER SUPPORT ANGLE PART #41 MAY BE TURNED IN AS SHOWN OR TURNED OUT.

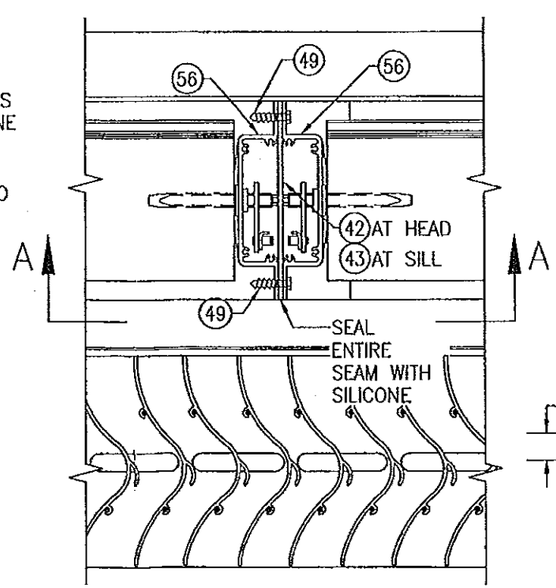

SECTION (L/8)
SCALE: 1/4 FULL

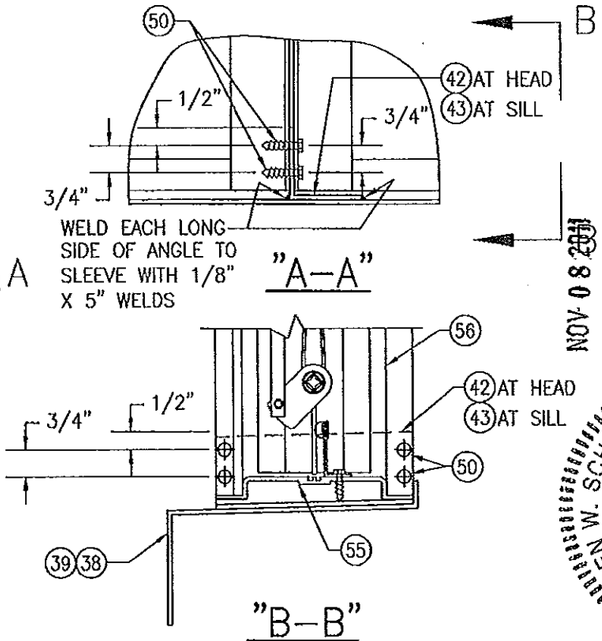

(SILL SECTION SHOWN, HEAD IS SIMILAR)

NOV 08 2017

NO.	REVISION DESCRIPTION	BY	DATE

DRAWN BY: W.R.H. | CHECKED BY: W.W.S.
PLOT: 1=4 | DATE: 10/16/06

DRAWING TITLE: EAV-66 VERTICAL LOUVER SYSTEM

MANUFACTURER
ARROW UNITED INDUSTRIES
450 RIVERSIDE DRIVE
WYALUSING, PA 18853
570-746-1888

CONSULTANTS
W. SCHAEFER ENGINEERING & CONSULTING, P.A. (CA 6809)
7480 150TH COURT NORTH
PALM BEACH GARDENS, FL. 33418
PHONE 561-744-3424

CERTIFICATION NO. 44735
WILHELM W. SCHAEFER
STATE OF FLORIDA
NOV 08 2017
PROFESSIONAL ENGINEER

DRAWING NO. 1504 | REV. B
SHEET NO. 8 OF 9

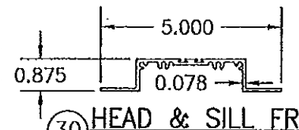

(30) HEAD & SILL FRAME
(USED WITH AFD-20 SYSTEM)

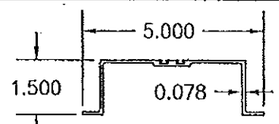

(31) JAMB
(USED WITH AFD-20 SYSTEM)

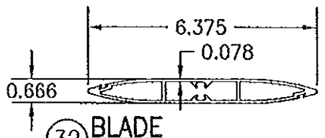

(32) BLADE
(USED WITH AFD-20 SYSTEM)

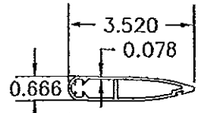

(33) HALF-BLADE
(USED WITH AFD-20 SYSTEM)

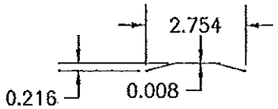

(35) JAMB SEAL
(USED WITH AFD-20 SYSTEM)

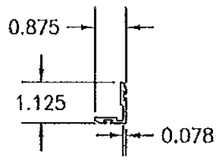

(36) BLADE STOP
(USED WITH AFD-20 SYSTEM)

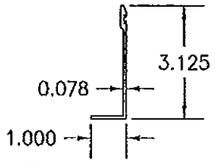

(37) BLADE STOP (OPTIONAL)
(USED WITH AFD-20 SYSTEM)

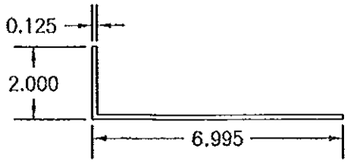

(38) HEAD PAN
(USED WITH AFD-20 & AC-525/526 SYSTEMS)

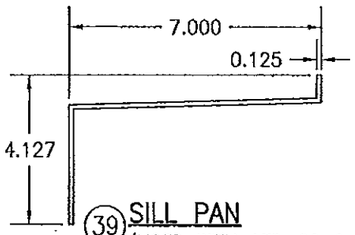

(39) SILL PAN
(USED WITH AFD-20 & AC-525/526 SYSTEMS)

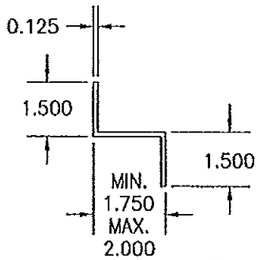

LENGTH = 3"
(40) Z-BRACKET
(USED WITH AFD-20 & AC-525/526 SYSTEMS)

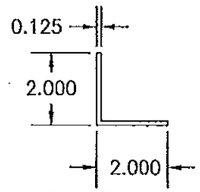

(41) CONTINUOUS SUPPORT ANGLE
(USED WITH AFD-20 & AC-525/526 SYSTEMS)

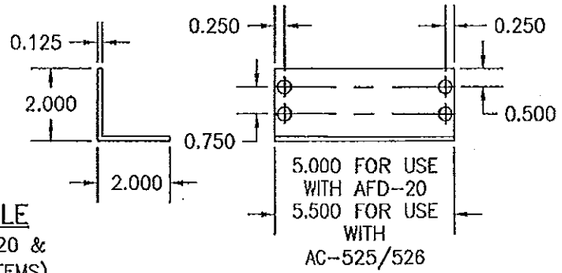

(42) MULLION END CLIP AT HEAD
(USED WITH AFD-20 & AC-525/526 SYSTEMS)

ANGLE CUT ENDS TO COUNTER THE SLOPE OF THE SILL PAN & ALLOW END EDGES TO BE COMPLETELY VERTICAL (ANGLE SHOWN IS AN EXAGERATION FOR VISUAL PURPOSE)

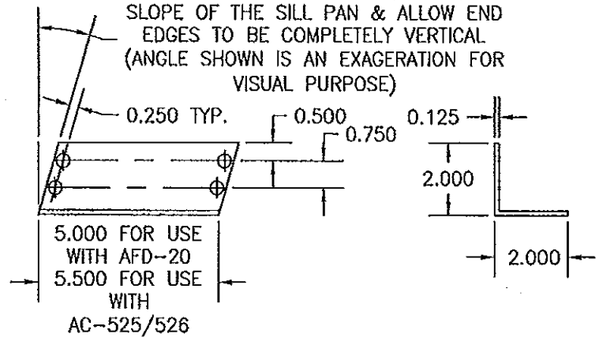

(43) MULLION END CLIP AT SILL
(USED WITH AFD-20 & AC-525/526 SYSTEMS)

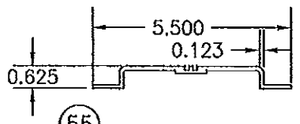

(55) HEAD & SILL
(USED WITH AC-525/526 SYSTEM)

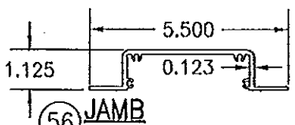

(56) JAMB
(USED WITH AC-525/526 SYSTEM)

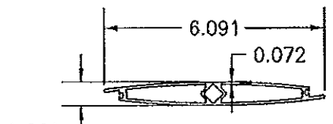

(57) BLADE
(USED WITH AC-525/526 SYSTEM)

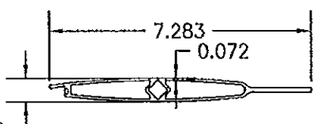

(58) BLADE (OPTIONAL AT SILL)
(USED WITH AC-525/526 SYSTEM)

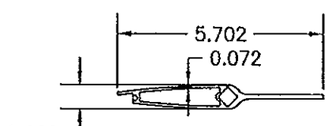

(59) BLADE (OPTIONAL AT SILL)
(USED WITH AC-525/526 SYSTEM)

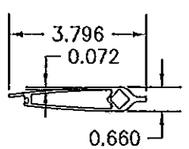

(60) BLADE (OPTIONAL AT SILL)
(USED WITH AC-525/526 SYSTEM)

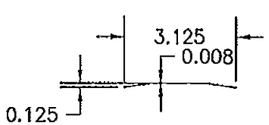

(62) JAMB SEAL
(USED WITH AC-525/526 SYSTEM)

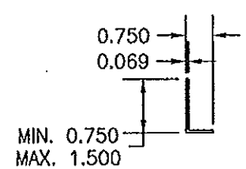

(63) BLADE STOP
(USED WITH AC-525/526 SYSTEM)

PRODUCT REVISED
as complying with the Florida Building Code
Acceptance No 11-1115.02
Expiration Date 03/15/2017
By
Miami Dade Product Control

PRODUCT RENEWED
as complying with the Florida Building Code
Acceptance No 11-1115.02
Expiration Date 03/15/2017
By
Miami Dade Product Control

AFD-20 DAMPER (ALL PARTS BY ARROW UNITED INDUSTRIES)

ITEM #	ITEM DESCRIPTION	MANUFACTURER/NOTES
	PARTS	
30	HEAD & SILL FRAME	6063-T5 ALUMINUM
31	JAMB	6063-T6 ALUMINUM
32	BLADE	6063-T5 ALUMINUM
33	HALF-BLADE	6063-T5 ALUMINUM
34	BLADE LINKAGE ASSEMBLY	BY AWV
35	JAMB SEAL	304 STAINLESS STEEL
36	BLADE STOP	6063-T5 ALUMINUM
37	BLADE STOP (OPTIONAL)	6063-T5 ALUMINUM
38	HEAD PAN	5052-H32 ALUMINUM
39	SILL PAN	5052-H32 ALUMINUM
40	Z-BRACKET	5052-H32 ALUMINUM
41	CONTINUOUS SUPPORT ANGLE	6063-T5 ALUMINUM
42	MULLION END CLIP AT HEAD	6063-T5 ALUMINUM
43	MULLION END CLIP AT SILL	6063-T5 ALUMINUM
	MISC. FASTENERS	
47	NO. 8 X 3/4" 18-8 SS SMS SCREW	2 PER Z-BRACKET
48	1/4" X 1" 410 S.S. SELF TAPPING SCREW	WITHIN 6" OF ENDS & MAX. 12" O.C.
49	NO. 8 X 3/4" 18-8 SS SMS SCREW	WITHIN 6" OF ENDS & MAX. 12" O.C.
50	1/4" X 1" 410 S.S. SELF TAPPING SCREW	4 PER MULLION END CLIP
51	NO. 8 X 3/4" 18-8 SS SMS SCREW	WITHIN 2" OF CORNERS & MAX. 12" O.C.
	SEALS & SEALANTS	
54	BLADE SEAL	SOLID SILICONE

AC-525/526 DAMPER (ALL PARTS BY AIR BALANCE, INC.)

ITEM #	ITEM DESCRIPTION	MANUFACTURER/NOTES
	PARTS	
55	HEAD & SILL FRAME	6063-T5 ALUMINUM
56	JAMB	6063-T6 ALUMINUM
57	BLADE	6063-T5 ALUMINUM
58	BLADE (OPTIONAL AT SILL)	6063-T5 ALUMINUM
59	BLADE (OPTIONAL AT SILL)	6063-T5 ALUMINUM
60	BLADE (OPTIONAL AT SILL)	6063-T5 ALUMINUM
61	BLADE LINKAGE ASSEMBLY	BY AWV
62	JAMB SEAL	304 STAINLESS STEEL
63	BLADE STOP	6063-T5 ALUMINUM
	SEALS & SEALANTS	
66	BLADE SEAL	SANTOPRENE
67	BULB SEAL	VINYL

DRAWN BY: W.R.W. | CHECKED BY: W.W.S.
PLOT: 1=1 | DATE: 10/18/06

NO.	REVISION DESCRIPTION	BY	DATE

MANUFACTURER
ARROW UNITED INDUSTRIES
450 RIVERSIDE DRIVE
WYALUSING, PA 18853
570-746-1888

DRAWING TITLE
EAV-66 VERTICAL LOUVER SYSTEM

CONSULTANTS
W. W. SCHAEFER ENGINEERING & CONSULTING, P.A. (CA 6809)
7480 150TH COURT NORTH
PALM BEACH GARDENS, FL 33418
PHONE: 561-744-3424

CERTIFICATION
NOV 08 2011
WARREN W. SCHAEFER, P.E.
P.E. NO. 44135

WARREN W. SCHAEFER LICENSE No. 44135 STATE OF FLORIDA ENGINEER PROFESSIONAL

DRAWING NO. 1504 | REV. B
SHEET NO. 9 OF 9