MIAMI-DADE COUNTY
PRODUCT CONTROL SECTION
11805 SW 26 Street, Room 208
Miami, Florida 33175-2474
T (786) 315-2590 F (786) 315-2599
www.miamidade.gov/economy

DEPARTMENT OF REGULATORY AND ECONOMIC RESOURCES (RER)
BOARD AND CODE ADMINISTRATION DIVISION

NOTICE OF ACCEPTANCE (NOA)

Arrow United Industries
450 Riverside Drive
Wyalusing, PA 18853

SCOPE: This NOA is being issued under the applicable rules and regulations governing the use of construction materials. The documentation submitted has been reviewed and accepted by Miami-Dade County RER-Product Control Section to be used in Miami Dade County and other areas where allowed by the Authority Having Jurisdiction (AHJ).

This NOA shall not be valid after the expiration date stated below. The Miami-Dade County Product Control Section (In Miami Dade County) and/or the AHJ (in areas other than Miami Dade County) reserve the right to have this product or material tested for quality assurance purposes. If this product or material fails to perform in the accepted manner, the manufacturer will incur the expense of such testing and the AHJ may immediately revoke, modify, or suspend the use of such product or material within their jurisdiction. RER reserves the right to revoke this acceptance, if it is determined by Miami-Dade County Product Control Section that this product or material fails to meet the requirements of the applicable building code.

This product is approved as described herein, and has been designed to comply with the Florida Building Code, including the High Velocity Hurricane Zone.

DESCRIPTION: Model EA-22 4" Aluminum Louver System

APPROVAL DOCUMENT: Drawing No. **35972-4**, titled "EA-22 Test Louver, Architectural & Non-Architectural Louver", sheets 1 through 7 of 7, dated 06/16/2000, with revision C1, dated 11/08/2011, prepared by W. W. Schaefer Engineering & Consulting, P.A. signed and sealed by Warren. W. Schaefer, P.E., bearing the Miami-Dade County Product Control revision stamp with the Notice of Acceptance number and expiration date by the Miami-Dade County Product Control Section.

MISSILE IMPACT RATING: Large and Small Missile Impact Resistant

LABELING: Each unit shall bear a permanent label with the manufacturer's name or logo, city, state, model/series, and following statement: "Miami-Dade County Product Control Approved", unless otherwise noted herein.

RENEWAL of this NOA shall be considered after a renewal application has been filed and there has been no change in the applicable building code negatively affecting the performance of this product.

TERMINATION of this NOA will occur after the expiration date or if there has been a revision or change in the materials, use, and/or manufacture of the product or process. Misuse of this NOA as an endorsement of any product, for sales, advertising or any other purposes shall automatically terminate this NOA. Failure to comply with any section of this NOA shall be cause for termination and removal of NOA.

ADVERTISEMENT: The NOA number preceded by the words Miami-Dade County, Florida, and followed by the expiration date may be displayed in advertising literature. If any portion of the NOA is displayed, then it shall be done in its entirety.

INSPECTION: A copy of this entire NOA shall be provided to the user by the manufacturer or its distributors and shall be available for inspection at the job site at the request of the Building Official.

This NOA **revises NOA # 13-0422.09** and consists of this page 1 and evidence page E-1, as well as approval document mentioned above.

The submitted documentation was reviewed by **Carlos M. Utrera, P.E.**

MIAMI-DADE COUNTY APPROVED

06/11/2014

NOTICE OF ACCEPTANCE: EVIDENCE SUBMITTED

A. DRAWINGS *"Submitted under NOA No. 11-1117.07"*

1. Drawing No. **35972-4**, titled "EA-22 Test Louver, Architectural & Non-Architectural Louver", sheets 1 through 7 of 7, dated 06/16/2000, with revision C1, dated 11/08/2011, prepared by W. W. Schaefer Engineering & Consulting, P.A. signed and sealed by Warren W. Schaefer, P.E.

B. TESTS *"Submitted under NOA No. 08-1030.03"*

1. Test reports on: 1) Uniform Static Air Pressure Test, Loading per FBC TAS 202-94
   2) Large Missile Impact Test per FBC, TAS 201-94
   3) Cyclic Wind Pressure Loading per FBC, TAS 203-94

   along with marked-up drawings and installation diagram, of "A.U.I. EA-22 Architectural & Non-Architectural Fixed Louver", prepared by Hurricane Test Laboratory, Inc., Report No. **0198-0811-08**, dated 09/17/2008, signed and sealed by Vinu J. Abraham, P.E.

"Submitted under NOA No. 03-0514.13"

2. Test reports on: 1) Uniform Static Air Pressure Test, Loading per FBC TAS 202-94
   2) Large Missile Impact Test per FBC, TAS 201-94
   3) Cyclic Wind Pressure Loading per FBC, TAS 203-94

   along with marked-up drawings and installation diagram, of "A.U.I. EA-22 Architectural & Non-Architectural Fixed Louver", prepared by Hurricane Test Laboratory, Inc., Report No. **0199-0518-99** and **0199-0615-99**, dated 12/06/1999, signed and sealed by Vinu J. Abraham, P.E.

C. CALCULATIONS *"Submitted under NOA # 13-0422.09"*

1. Wood anchors calculations prepared by W.W. Schaefer Engineering & Consulting, P.A., dated 04/10/2013, signed and sealed by Warren W. Schaefer, P.E.

"Submitted under NOA No. 08-1030.03"

2. Revision calculations prepared by W.W. Schaefer Engineering & Consulting, P.A., dated 04/17/2008, signed and sealed by Warren W. Schaefer, P.E.

D. QUALITY ASSURANCE

1. Miami-Dade Department of Regulatory and Economic Resources (RER)

E. MATERIAL CERTIFICATIONS

1. None.

F. STATEMENTS

1. Statement letter of code conformance to 2010 and 5th edition (2014) FBC issued by W. W. Schaefer Engineering & Consulting, P.A., dated 04/10/2014, signed and sealed by Warren W. Schaefer, P.E.

"Submitted under NOA # 13-0422.09"

2. No financial interest letter issued by W. W. Schaefer Engineering & Consulting, P.A, dated 04/10/2013, signed and sealed by Warren W. Schaefer, P.E.

06/11/2014

Carlos M. Utrera, P.E.
Product Control Examiner
NOA No. 14-0423.20
Expiration Date: July 27, 2018
Approval Date: June 19, 2014

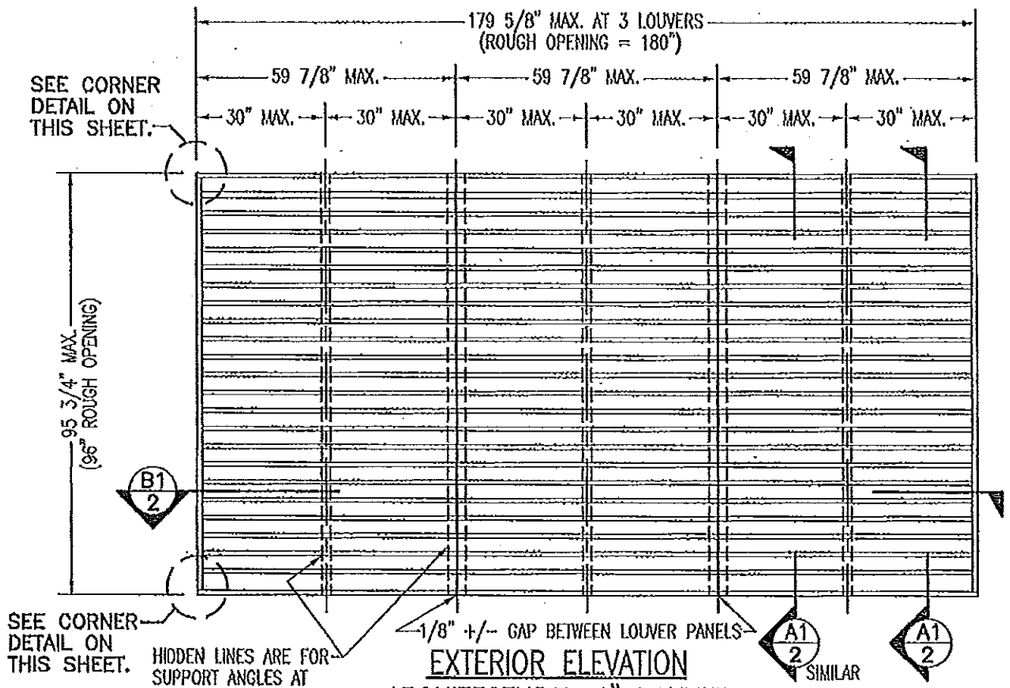

EXTERIOR ELEVATION
ARCHITECTURAL 4" LOUVER

SCALE: 3/8"=1'-0"

NOTE: THIS LOUVER SYSTEM MAY CONSIST OF AN UNLIMITED NUMBER OF SECTIONS PROVIDING EACH SECTION DOES NOT EXCEED 59 7/8" X 95 3/4" IN SIZE.

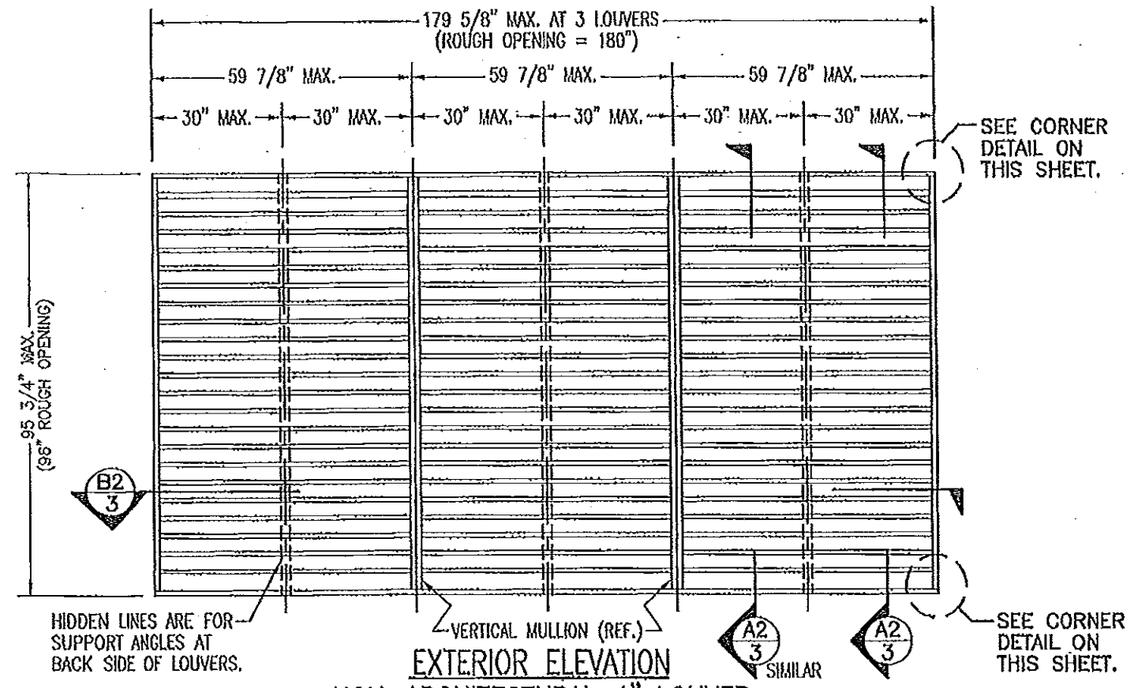

EXTERIOR ELEVATION
NON-ARCHITECTURAL 4" LOUVER

SCALE: 3/8"=1'-0"

NOTE: THIS LOUVER SYSTEM MAY CONSIST OF AN UNLIMITED NUMBER OF SECTIONS PROVIDING EACH SECTION DOES NOT EXCEED 59 7/8" X 95 3/4" IN SIZE.

THESE DRAWINGS ARE APPLICABLE ONLY TO THE PRODUCT SPECIFIED. THEY MAY NOT BE USED FOR THE ASSEMBLY AND/OR INSTALLATION OF ANY OTHER PRODUCT NOR MAY THEY BE USED FOR RATIONAL AND/OR LOCAL APPROVAL OF ANY PRODUCT NOT PRODUCED BY THE MANUFACTURER STATED ON THESE DRAWINGS.

GENERAL NOTES:

1. THESE LOUVER SYSTEMS HAVE BEEN TESTED, ANALYZED & APPROVED FOR DESIGN PRESSURES NOT TO EXCEED THOSE SHOWN IN THE "ALLOWABLE DESIGN PRESSURE TABLE(S).
2. OPENINGS MUST BE PROPERLY DESIGNED & CONSTRUCTED TO TRANSFER WIND LOADS TO THE STRUCTURE.
3. ALL HARDWARE & FASTENERS SHALL BE IN ACCORDANCE WITH THESE DRAWINGS & SHALL NOT VARY UNLESS SPECIFICALLY MENTIONED ON THE DRAWINGS. SPECIFIED ANCHOR EMBED TO BASE MATERIAL SHALL BE BEYOND WALL FINISH OR STUCCO.
4. THE DETAILS & SPECIFICATIONS SHOWN HEREIN REPRESENT THE PRODUCTS TESTED & PROPOSED FOR IMPACT, CYCLIC & UNIFORM STATIC AIR PRESSURE TESTING IN CONFORMANCE WITH THE FLORIDA BUILDING CODE PROTOCALS TAS-201, 202 & 203 FOR LARGE MISSILE IMPACT LOUVERS.
5. THESE LOUVER SYSTEMS HAVE BEEN DESIGNED IN ACCORDANCE WITH AND MEET THE REQUIREMENTS OF THE FLORIDA BUILDING CODE (FBC) INCLUDING HIGH VELOCITY HURRICANE ZONES (HVHZ).
6. ALL ANCHORS SECURING LOUVER FRAME TO PRESSURE TREATED BUCKS OR WOOD FRAMING SHALL BE CAPABLE OF RESISTING CORROSION CAUSED BY THE PRESSURE TREATING CHEMICALS IN THE WOOD.
7. DETERMINE THE POSITIVE & NEGATIVE DESIGN LOADS TO USE WHEN REFERENCING THESE DOCUMENTS IN ACCORDANCE WITH THE GOVERNING CODE AND GOVERNING WIND VELOCITY. FOR WIND LOAD CALCULATIONS IN ACCORDANCE WITH THE FLORIDA BUILDING CODE, A DIRECTIONALITY FACTOR OF Kd = 0.85 MAY BE APPLIED PER THE ASCE 7 STANDARD.
8. NO INCREASE IN ALLOWABLE STRESS HAS BEEN USED IN THE CERTIFICATION OF THIS PRODUCT. WIND LOAD DURATION FACTOR Cd = 1.6 WAS USED FOR WOOD SCREW ANALYSIS ONLY.
9. MATERIALS, INCLUDING BUT NOT LIMITED TO STEEL SCREWS, THAT COME INTO CONTACT WITH OTHER DISSIMILAR MATERIALS SHALL MEET THE REQUIREMENTS OF FLORIDA BUILDING CODE CHAPTER 20.
10. MAXIMUM ALLOWABLE INDIVIDUAL PANEL SIZE = 59 7/8" X 95 3/4".
11. MAXIMUM ASSEMBLY SIZE = UNLIMITED WIDTH; UP TO 95 3/4" HEIGHT.
12. ASSEMBLIES/SECTIONS MAY BE STACKED VERTICALLY PROVIDING A STRUCTURAL SUPPORT IS DESIGNED & INSTALLED BY OTHERS TO SUPPORT ALL LOADS TRANSFERED FROM THE LOUVER ASSEMBLY.
13. MAXIMUM UNSUPPORTED BLADE LENGTH SHALL NOT EXCEED 30"
14. ALL FASTENERS SHALL BE PLATED STEEL OR 304 STAINLESS STEEL.
15. SPECIFIED SUBSTRATES REQUIREMENTS:
    CONCRETE: MIN. 3000 PSI
    MASONRY: MIN. C90 CMU
    WOOD: MIN. GRADE 2; G = 0.55
    STEEL: MIN. 1/8" THICK A36 (36 KSI)
16. THIS SYSTEM HAS NOT BEEN TESTED FOR WATER INFILTRATION RESISTANCE & IS NOT A WATER RESISTANT SYSTEM.

PRODUCT RENEWED
as complying with the Florida Building Code
Acceptance No 13-0422.09
Expiration Date 07/27/2018
By
Miami Dade Product Control

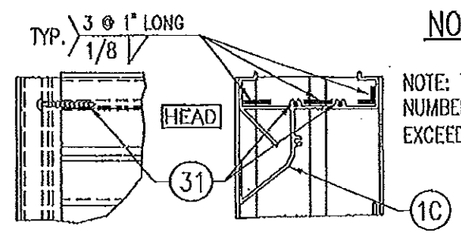

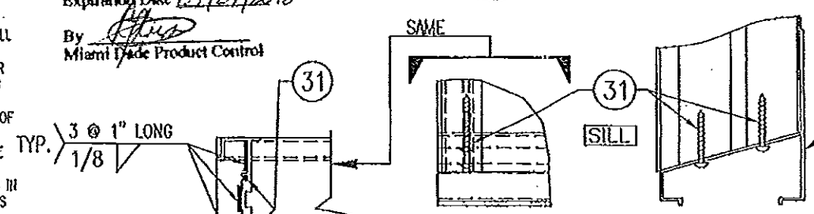

CORNER DETAIL OPTION 2

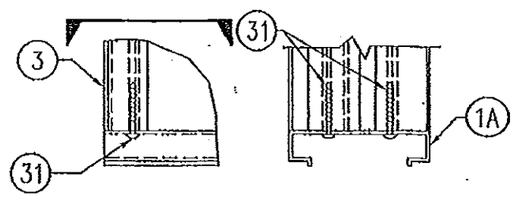

CORNER DETAIL OPTION 1
(SILL CORNER SHOWN; HEAD IS MIRRORED IMAGE)

MAX. ALLOWABLE DESIGN WIND PRESSURE	
POSITIVE	NEGATIVE
150 PSF	150 PSF
NOTE: SEE LOAD TABLE ON SHEET 7 FOR VARIATIONS OF PRESSURES WITH RESPECT TO PANEL WIDTH & CLIP SPACING.	

PRODUCT REVISED
as complying with the Florida Building Code
Acceptance No 11-1117.07
Expiration Date 07/27/2013
By
Miami Dade Product Control

PRODUCT REVISED
as complying with the Florida Building Code
Acceptance No 14-0423.20
Expiration Date 07/27/2018
By
Miami Dade Product Control

WARREN W. SCHAEFER LICENSE No. 44135 STATE OF FLORIDA PROFESSIONAL ENGINEER

NOV. 08 2011
WARREN W. SCHAEFER, P.E.
STRUCTURAL ENGINEER
P.E. No. 44135

W.W. SCHAEFER ENGINEERING & CONSULTING, P.A. (CA 6809)
STRUCTURAL CONSULTING ENGINEERS
7480 150TH COURT NORTH
PALM BEACH GARDENS, FL 33418
PHONE: 561-744-3424

	REVISION	DATE	DRN	CK	APPD
A1	REVISED CORNER DETAIL; ADDED CORNER DETAIL OPTION 2	01/28/03	K.P.S.	W.W.S.	
A2	UPDATE GENERAL NOTES 6, 12, 13 & 14	01/28/03	K.P.S.	W.W.S.	
B1	UPDATE FOR CODE COMPLIANCE	04/17/08	W.R.M.	W.W.S.	
C1	UPDATE TO CURRENT STANDARDS	11/08/11	W.R.M.	W.W.S.	

ARROW UNITED INDUSTRIES
A Division of Mestek, Inc.
450 RIVERSIDE DRIVE – P.O. BOX 69
WYALUSING, PA 18853
PHONE 570-746-1888; FAX 570-746-9286

EA-22 TEST LOUVER
ARCHITECTURAL & NON-ARCHITECTURAL LOUVER
ELEVATIONS & NOTES

CKD.BY		APPD.BY W.W.S.	SHEET: 1 of 7
DRN.BY W.W.S.		DWG. NO. 35972-4	REV. C
DATE 06-16-00			

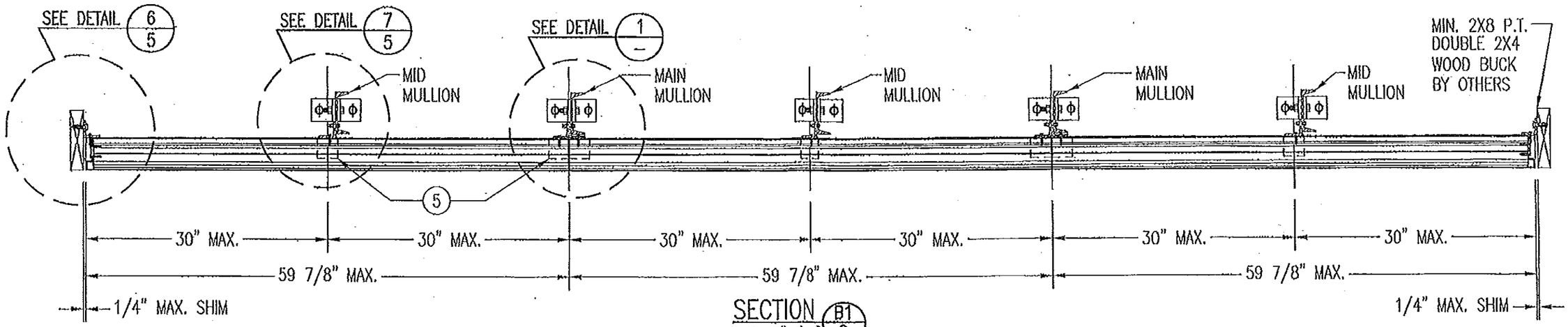

SECTION B1/2
SCALE: 1"=1'-0"
ARCHITECTURAL LOUVER

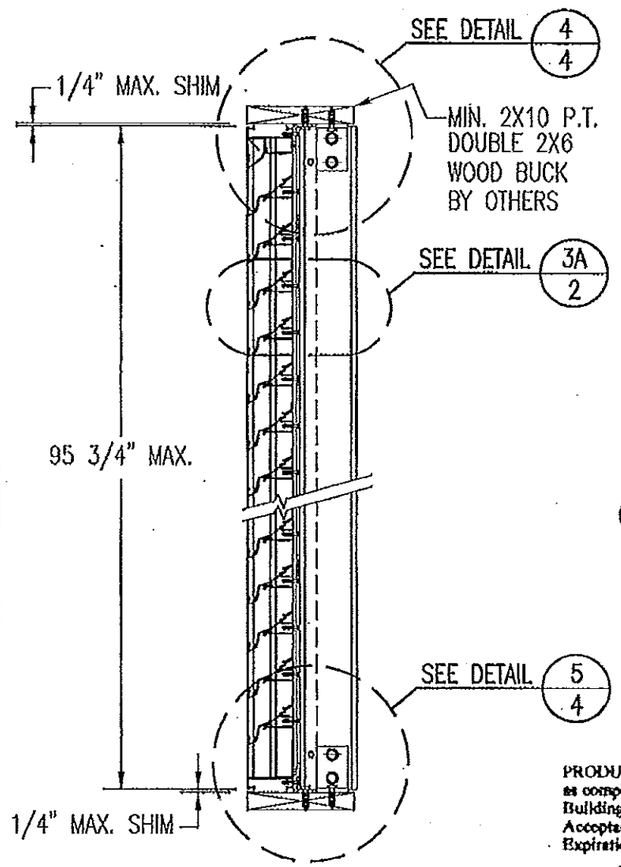

SECTION A1/2
SCALE: 1"=1'-0"
ARCHITECTURAL LOUVER

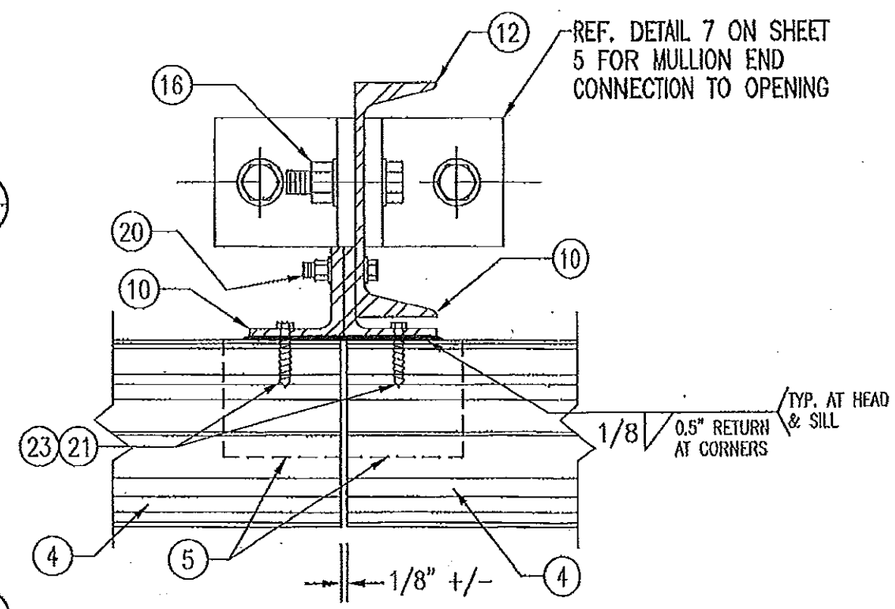

DETAIL 1/–
SCALE: 1/3 FULL
ARCHITECTURAL LOUVER

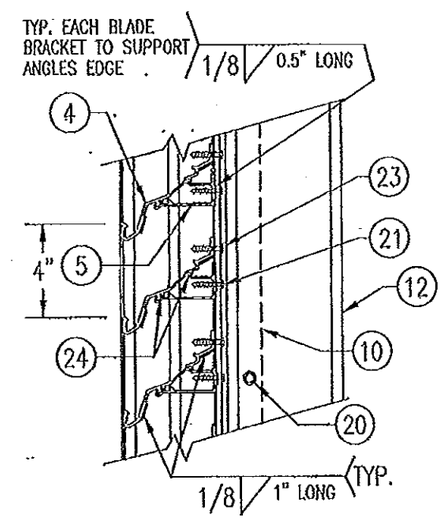

DETAIL 3A/2
SCALE: 2"=1'-0"
TYP. AT ALL MULLIONS THIS SHEET

PRODUCT RENEWED
as complying with the Florida Building Code
Acceptance No 13-0422.09
Expiration Date 07/27/2018
By
Miami Dade Product Control

PRODUCT REVISED
as complying with the Florida Building Code
Acceptance No 11-1117.017
Expiration Date 07/27/2013
By
Miami Dade Product Control

PRODUCT REVISED
as complying with the Florida Building Code
Acceptance No 14-0423.20
Expiration Date 07/27/2018
By
Miami Dade Product Control

WARREN W. SCHAEFER
LICENSE
No. 44135
STATE OF FLORIDA
PROFESSIONAL ENGINEER

NOV 08 2011
WARREN W. SCHAEFER, P.E.
STRUCTURAL ENGINEER
P.E. No. 44135

W. W. SCHAEFER ENGINEERING & CONSULTING, P.A. (CA 6809)
STRUCTURAL CONSULTING ENGINEERS
7480 150TH COURT NORTH
PALM BEACH GARDENS, FL 33418
PHONE: 561-744-3424

REVISION	DATE	DRN	CK	APPD

ARROW UNITED INDUSTRIES
A Division of Mestek, Inc.
450 RIVERSIDE DRIVE – P.O. BOX 69
WYALUSING, PA 18853
PHONE 570-746-1888; FAX 570-746-9286

EA-22 TEST LOUVER
ARCHITECTURAL LOUVER
SECTIONS & DETAILS

CKD.BY	APPD.BY W.W.S.	SHEET: 2 of 7
DRN.BY W.W.S.	DWG. NO. 35972-4	REV. C
DATE 06-16-00		

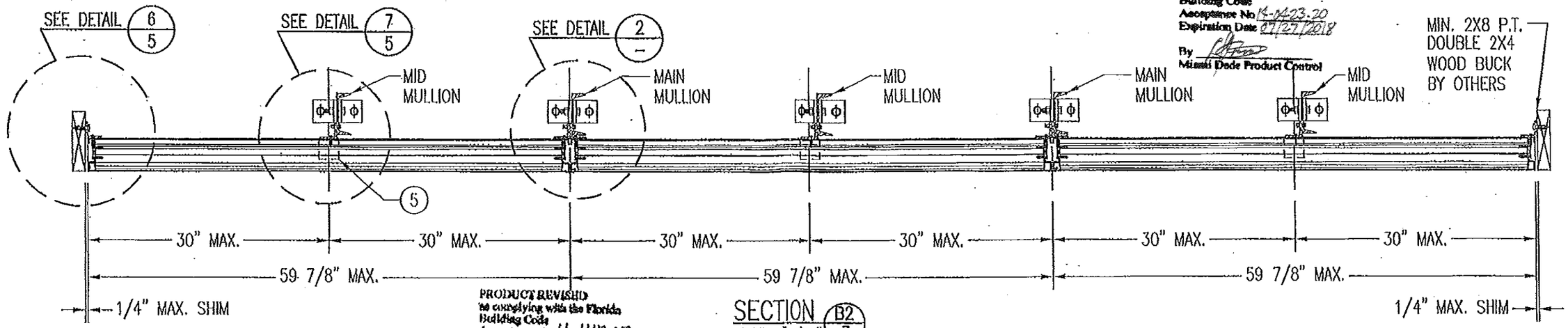

PRODUCT REVISED
as complying with the Florida Building Code
Acceptance No 15-0423.20
Expiration Date 07/27/2018
By
Miami Dade Product Control

PRODUCT REVISED
as complying with the Florida Building Code
Acceptance No 11-1117.07
Expiration Date 07/27/2013
By
Miami Dade Product Control

SECTION B2/3
SCALE: 1"=1'-0"
NON-ARCHITECTURAL LOUVER

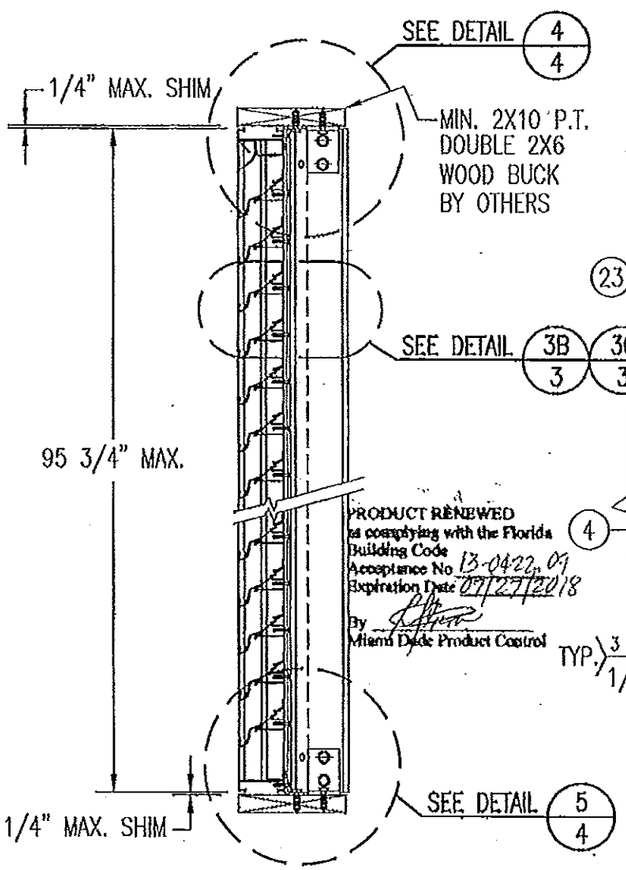

PRODUCT RENEWED
as complying with the Florida Building Code
Acceptance No 13-0422.07
Expiration Date 07/27/2018
By
Miami Dade Product Control

SECTION A2/3
SCALE: 1"=1'-0"
NON-ARCHITECTURAL LOUVER

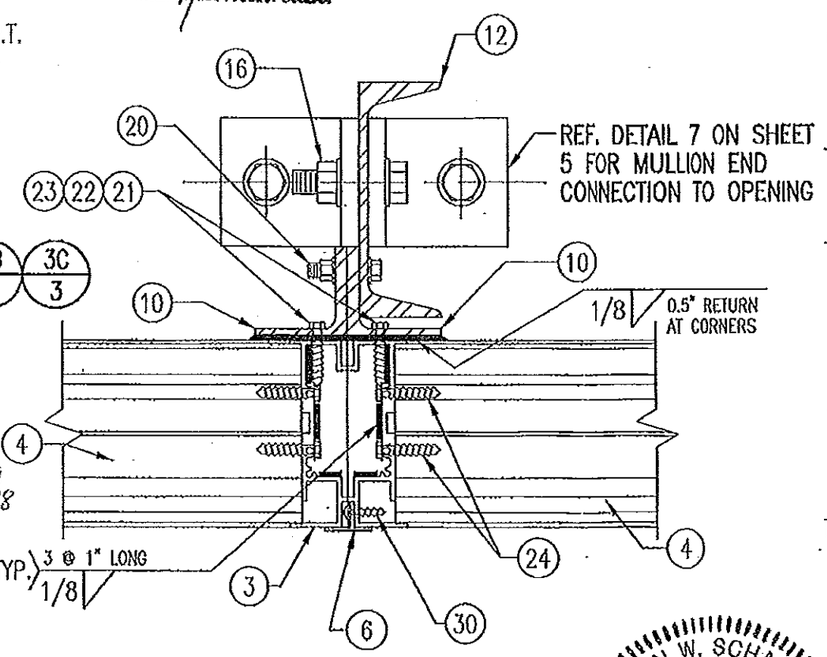

DETAIL 2/-
SCALE: 2"=1'-0"
NON-ARCHITECTURAL LOUVER

NOTE: SIDE JAMBS ARE ADDITIONALLY FASTENED TO THE SILL & HEAD WITH 2 NO. 7 X 1" SMS THROUGH SILL & INTO JAMB SPLINES.

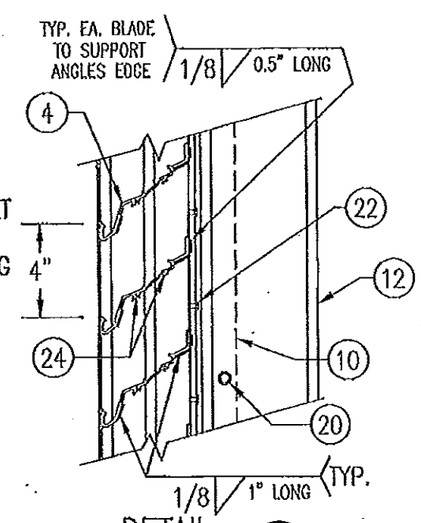

DETAIL 3B/3
SCALE: 2"=1'-0"
TYP. AT MAIN MULLIONS THIS SHEET

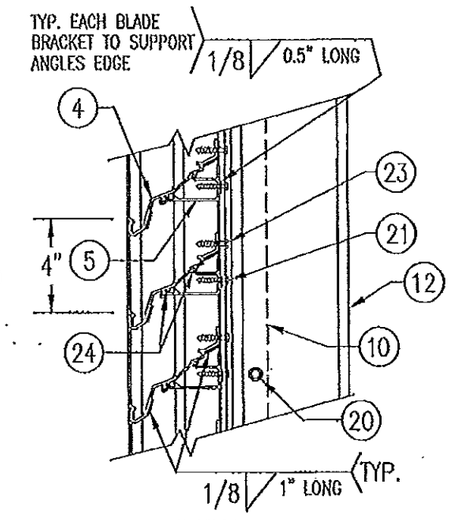

DETAIL 3C/3
SCALE: 2"=1'-0"
TYP. AT ALL MID-SPAN MULLIONS THIS SHEET

WARREN W. SCHAEFER LICENSE No. 44135 STATE OF FLORIDA PROFESSIONAL ENGINEER

NOV 08 2011
WARREN W. SCHAEFER, P.E.
STRUCTURAL ENGINEER
P.E. No. 44135

W. W. SCHAEFER ENGINEERING & CONSULTING, P.A. (CA 6809)
STRUCTURAL CONSULTING ENGINEERS
7480 150TH COURT NORTH
PALM BEACH GARDENS, FL 33418
PHONE: 561-744-3424

REVISION	DATE	DRN	CK	APPD

ARROW UNITED INDUSTRIES
A Division of Mestek, Inc.
450 RIVERSIDE DRIVE – P.O. BOX 89
WYALUSING, PA 18853
PHONE 570-746-1888; FAX 570-746-9286

EA-22 TEST LOUVER
ARCHITECTURAL LOUVER
SECTIONS & DETAILS

CKD.BY	APPD.BY W.W.S.	SHEET: 3 of 7
DRN.BY W.W.S.	DWG. NO. 35972-4	REV. C
DATE 06-16-00		

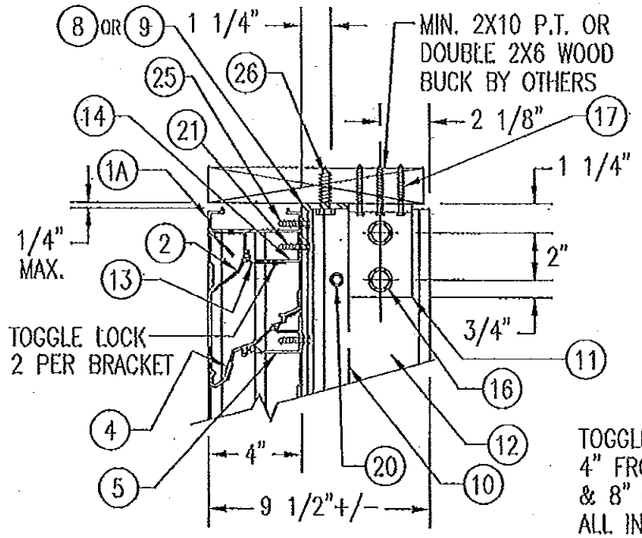

WOOD FRAMED OPENING

SEE "DETAIL 3A & 3B" FOR LOUVER BLADE DETAILS
NOTE: STANDARD HEADER (ITEMS #1A & 2) IS SHOWN IN THIS VIEW. 1-PIECE HEADER (ITEM 1C) ALSO APPLIES.

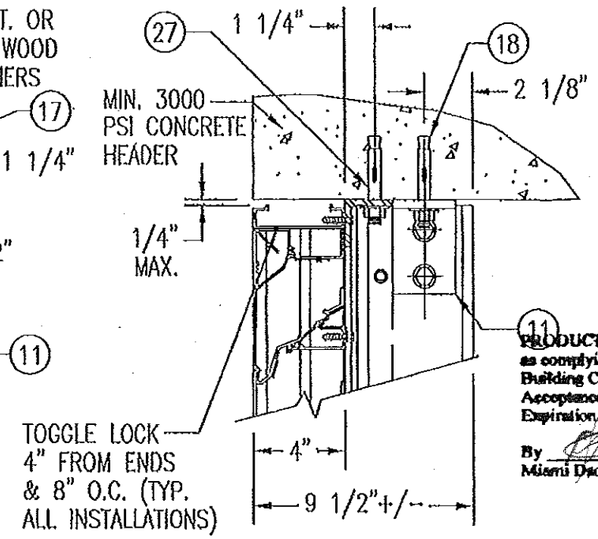

CONCRETE HEAD

SEE "WOOD OPENING" FOR DETAIL NOT SHOWN
(MASONRY ACCEPTABLE AT SIDES ONLY AND MAY NOT BE USED AT HEAD OR SILL)

DETAIL 4/4
SCALE: 2"=1'-0"

PRODUCT REVISED
as complying with the Florida Building Code
Acceptance No 14-0423.20
Expiration Date 07/27/2018
By
Miami Dade Product Control

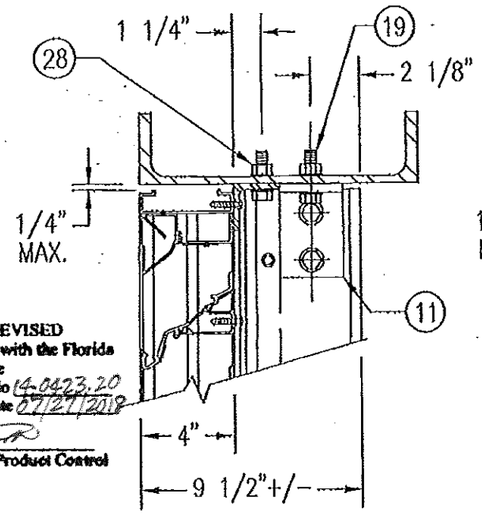

STEEL FRAME OPENING (BOLTED)

SEE "WOOD OPENING" FOR DETAIL NOT SHOWN

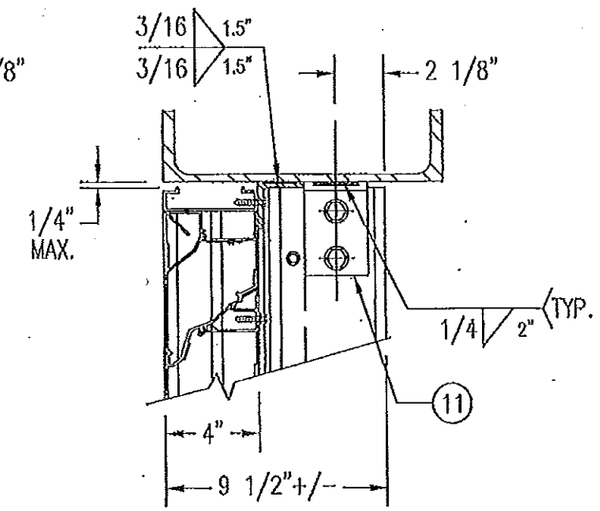

STEEL FRAME OPENING (WELDED)

SEE "WOOD OPENING" FOR DETAIL NOT SHOWN

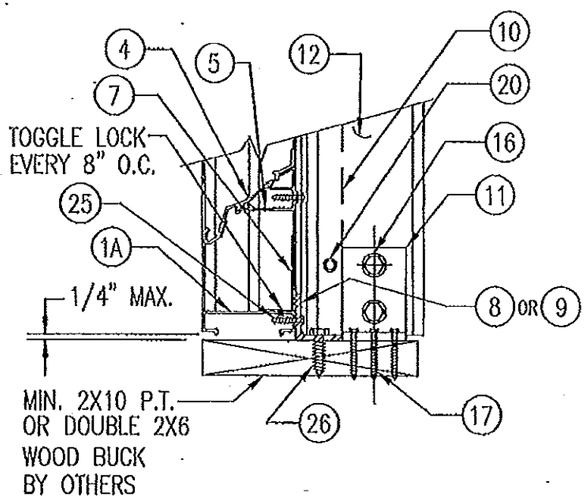

WOOD FRAMED OPENING

SEE "DETAIL 3A & 3B" FOR LOUVER BLADE DETAILS
NOTE: STANDARD SILL (ITEM #1A) IS SHOWN IN THIS VIEW. SLOPED SILL (ITEM 1B) ALSO APPLIES.

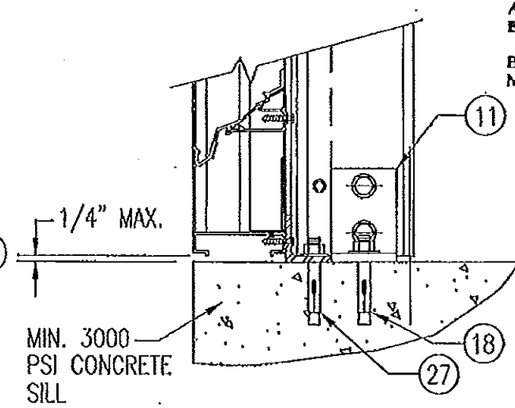

CONCRETE SILL

SEE "WOOD OPENING" FOR DETAIL NOT SHOWN
(MASONRY ACCEPTABLE AT SIDES ONLY AND MAY NOT BE USED AT HEAD OR SILL)

DETAIL 5/4
SCALE: 2"=1'-0"

PRODUCT RENEWED
as complying with the Florida Building Code
Acceptance No 13-0422.09
Expiration Date 07/27/2018
By
Miami Dade Product Control

PRODUCT REVISED
as complying with the Florida Building Code
Acceptance No 11-1117.07
Expiration Date 07/27/2013
By
Miami Dade Product Control

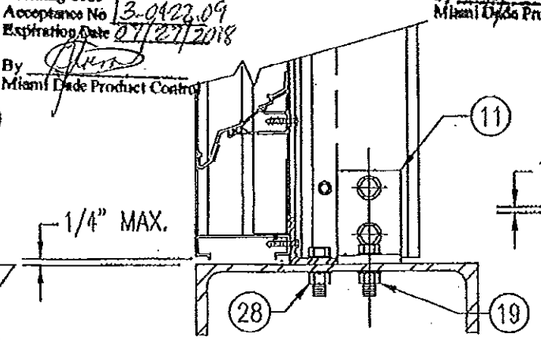

STEEL FRAME OPENING (BOLTED)

SEE "WOOD OPENING" FOR DETAIL NOT SHOWN

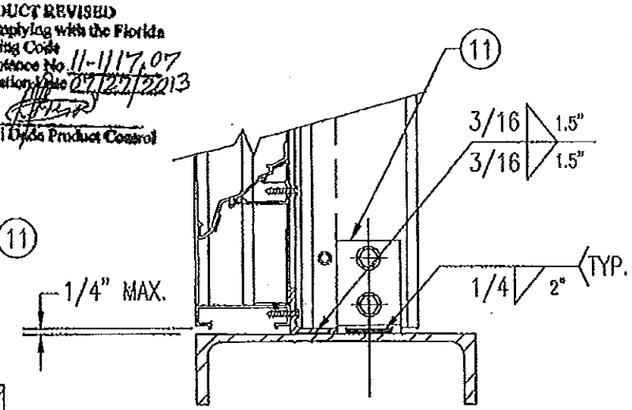

STEEL FRAME OPENING (WELDED)

SEE "WOOD OPENING" FOR DETAIL NOT SHOWN

MASONRY MAY ONLY BE USED AT SIDES OF LOUVER PANELS & MAY NOT BE USED AT THE HEAD OR SILL.

WARREN W. SCHAEFER LICENSE No. 44135 STATE OF FLORIDA PROFESSIONAL ENGINEER

NOV 08 2011
WARREN W. SCHAEFER, P.E.
STRUCTURAL ENGINEER
P.E. No. 44135

W. W. SCHAEFER ENGINEERING & CONSULTING, P.A. (CA 6809)
STRUCTURAL CONSULTING ENGINEERS
7480 150TH COURT NORTH
PALM BEACH GARDENS, FL 33418
PHONE: 561-744-3424

	REVISION	DATE	DRN CK	APPD
A1	BUBBLE "1A" WAS "1"; ADDED NOTES TO "WOOD FRAMED OPENING"	01/29/03	K.P.S.	W.W.S.

ARROW UNITED INDUSTRIES
A Division of Mestek, Inc.
450 RIVERSIDE DRIVE – P.O. BOX 69
WYALUSING, PA 18853
PHONE 570-746-1888; FAX 570-746-9286

EA-22 TEST LOUVER
ARCHITECTURAL & NON-ARCHITECTURAL LOUVER DETAILS

CKD.BY	APPD.BY W.W.S.	SHEET: 4 of 7
DRN.BY W.W.S.	DWG. NO. 35972-4	REV. C
DATE 06-16-00		

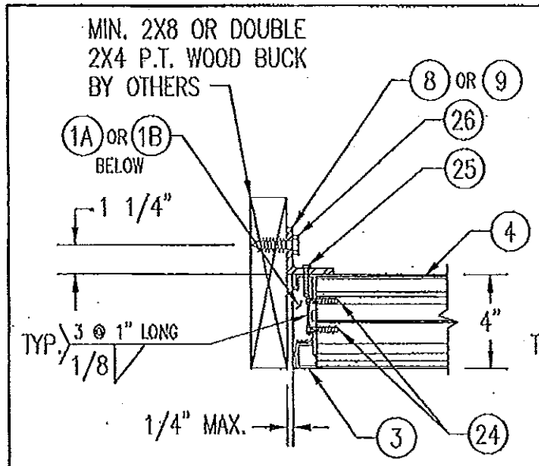

WOOD FRAMED OPENING

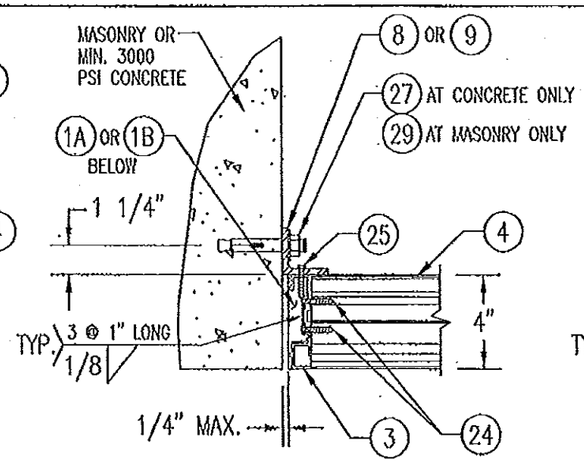

CONCRETE/MASONRY OPENING

(MASONRY ACCEPTABLE AT SIDES ONLY
AND MAY NOT BE USED AT HEAD OR SILL)

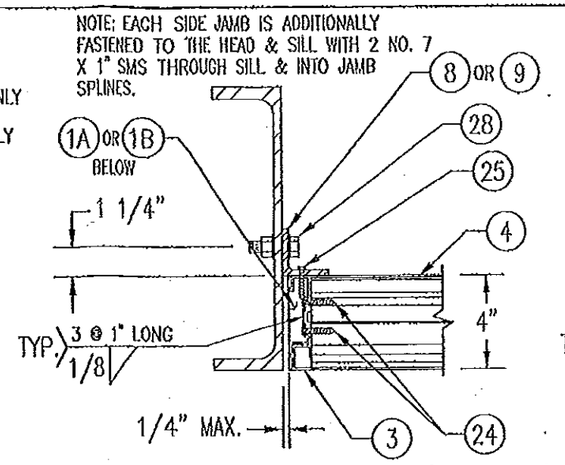

STEEL FRAME OPENING (BOLTED)

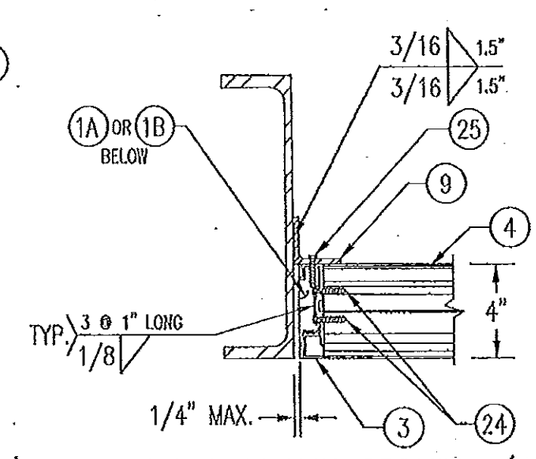

STEEL FRAME OPENING (WELDED)

DETAIL 6/5
SCALE: 2"=1'-0"

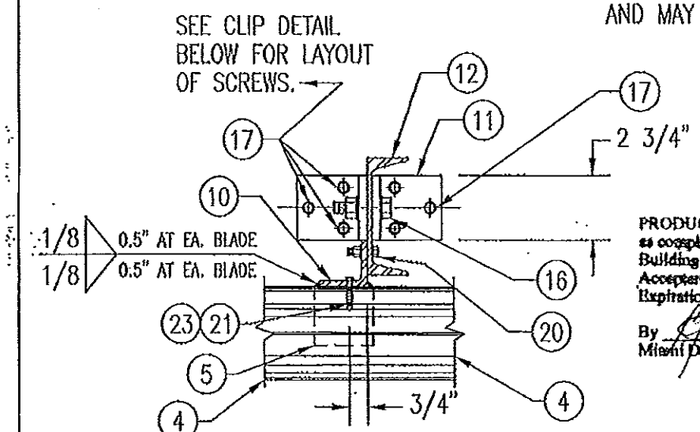

WOOD FRAMED OPENING

PRODUCT RENEWED
as complying with the Florida
Building Code
Acceptance No 13-0422.09
Expiration Date 07/27/2018
By
Miami Dade Product Control

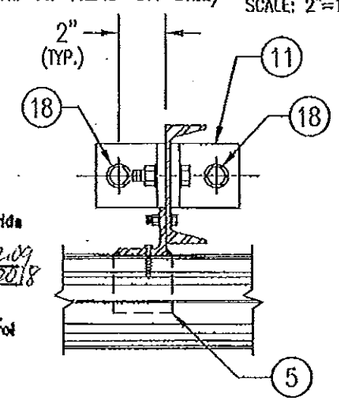

CONCRETE SILL & HEAD

SEE "WOOD OPENING" FOR DETAIL NOT SHOWN
(MASONRY ACCEPTABLE AT SIDES ONLY
AND MAY NOT BE USED AT HEAD OR SILL)

DETAIL 7/5
SCALE: 2"=1'-0"

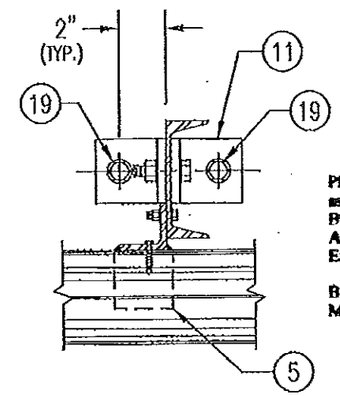

STEEL FRAME OPENING (BOLTED)

SEE "WOOD OPENING" FOR DETAIL NOT SHOWN

PRODUCT REVISED
as complying with the Florida
Building Code
Acceptance No 14-1123.20
Expiration Date 07/27/2018
By
Miami Dade Product Control

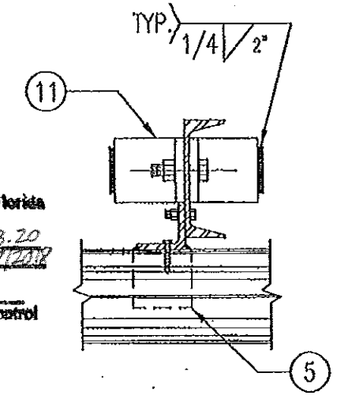

STEEL FRAME OPENING (WELDED)

SEE "WOOD OPENING" FOR DETAIL NOT SHOWN

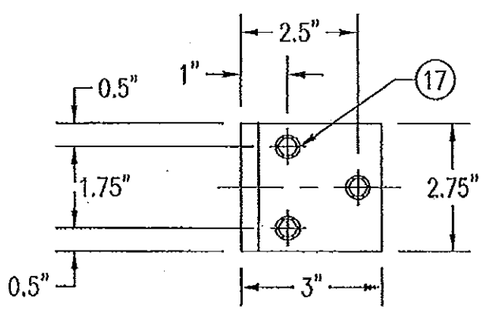

MULLION CLIP DETAIL @ WOOD INSTALLATION

MASONRY MAY ONLY BE USED AT SIDES OF LOUVER PANELS & MAY NOT BE USED AT THE HEAD OR SILL.

PRODUCT REVISED
as complying with the Florida
Building Code
Acceptance No 11-1117.07
Expiration Date 07/27/2013
By
Miami Dade Product Control

WARREN W. SCHAEFER
LICENSE
No. 44135
STATE OF
FLORIDA
PROFESSIONAL ENGINEER

NOV 08 2011
WARREN W. SCHAEFER, P.E.
STRUCTURAL ENGINEER
P.E. NO. 44135

W. W. SCHAEFER ENGINEERING
& CONSULTING, P.A. (CA 6809)
STRUCTURAL CONSULTING ENGINEERS
7480 150TH COURT NORTH
PALM BEACH GARDENS, FL 33418
PHONE: 561-744-3424

A1	BUBBLE "1A" WAS "1"	01/29/03	K.P.S.	W.W.S.	
	REVISION	DATE	DRN CK	APPD	

ARROW UNITED INDUSTRIES
A Division of Mestek, Inc.
450 RIVERSIDE DRIVE – P.O. BOX 69
WYALUSING, PA 18853
PHONE 570-746-1888; FAX 570-746-9266

EA-22 TEST LOUVER
ARCHITECTURAL & NON-ARCHITECTURAL LOUVER
DETAILS

CKD.BY	APPD.BY W.W.S.	SHEET: 5 of 7
DRN.BY W.W.S.	DWG. NO. 35972-4	REV. C
DATE 06-16-00		

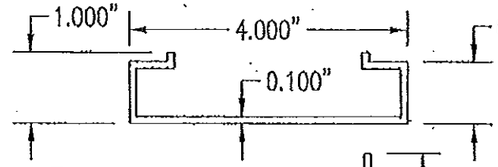

1A STANDARD HEADER & SILL JAMB
6063-T5 ALUMINUM
SCALE: 1/2 FULL

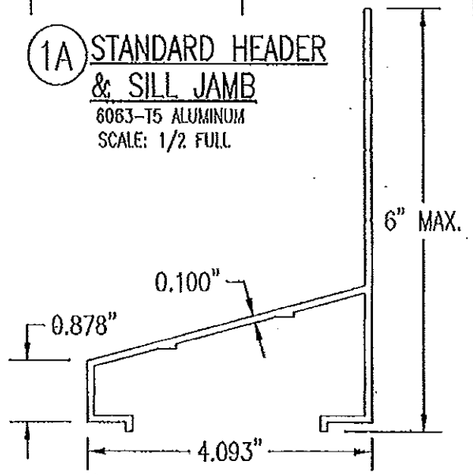

1B OPTIONAL SLOPED SILL
6063-T5 ALUMINUM
SCALE: 1/2 FULL

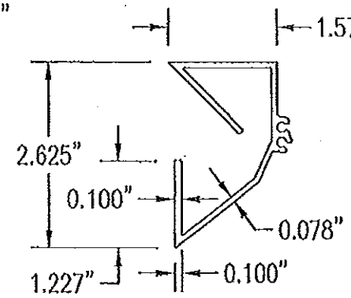

2 PARTIAL BLADE
6063-T5 ALUMINUM
SCALE: 1/2 FULL

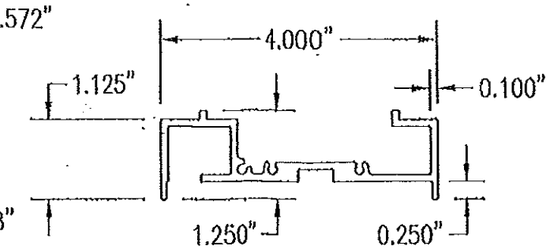

3 SIDE JAMB
6063-T5 ALUMINUM
SCALE: 1/2 FULL

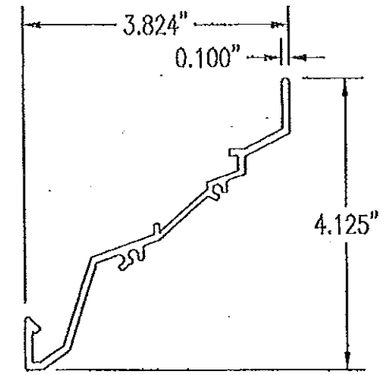

4 LOUVER BLADE
6063-T5 ALUMINUM
SCALE: 1/2 FULL

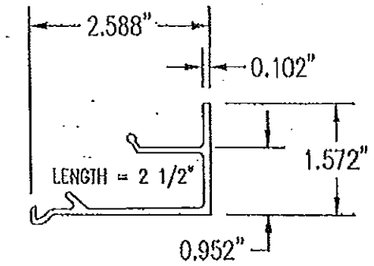

5 BLADE BRACE
6063-T5 ALUMINUM
SCALE: 1/2 FULL

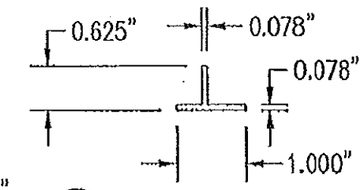

6 MULLION CAP
6063-T5 ALUMINUM
SCALE: 1/2 FULL

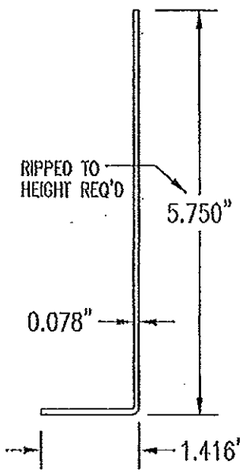

7 SILL ANGLE
6063-T5 ALUMINUM
SCALE: 1/2 FULL

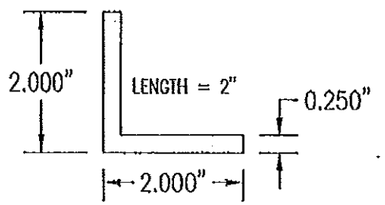

8 CONNECTION ANGLE
6063-T5 ALUMINUM
SCALE: 1/2 FULL

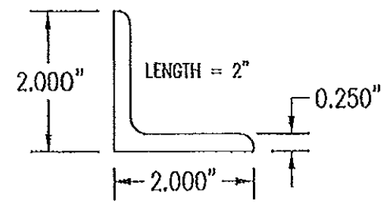

9 CONNECTION ANGLE
A36 STEEL
SCALE: 1/2 FULL

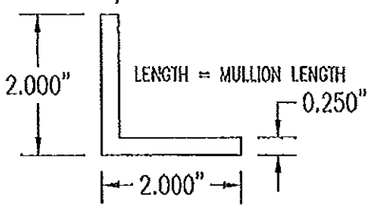

10 MULLION ANGLE
6063-T5 ALUMINUM
SCALE: 1/2 FULL

PRODUCT RENEWED
as complying with the Florida Building Code
Acceptance No 13-0422.09
Expiration Date 07/27/2018
By
Miami-Dade Product Control

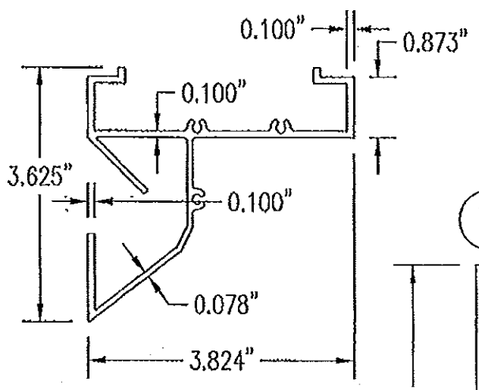

1C OPTIONAL 1-PIECE HEADER
6063-T5 ALUMINUM
SCALE: 1/2 FULL

PRODUCT REVISED
as complying with the Florida Building Code
Acceptance No 14-0423.20
Expiration Date 07/27/2018
By
Miami-Dade Product Control

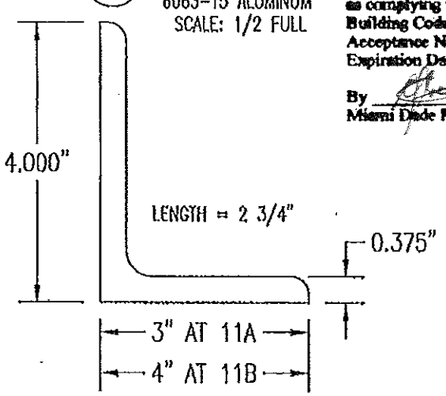

11A 11B MULLION END CONNECTION ANGLE
A36 STEEL
SCALE: 1/2 FULL

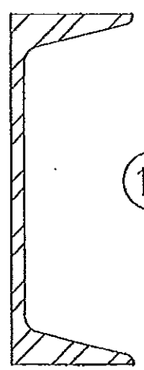

12 C5X6.7 MULLION
A36 STEEL
SCALE: 1/2 FULL

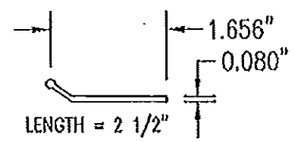

13 PARTIAL BLADE REINFORCEMENT PLATE
6063-T5 ALUMINUM
SCALE: 1/2 FULL

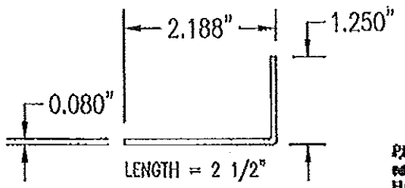

14 PARTIAL BLADE REINFORCEMENT ANGLE
6063-T5 ALUMINUM
SCALE: 1/2 FULL

PRODUCT REVISED
as complying with the Florida Building Code
Acceptance No 11-1117.07
Expiration Date 07/27/2013
By
Miami-Dade Product Control

WARREN W. SCHAEFER LICENSE No. 44135 STATE OF FLORIDA PROFESSIONAL ENGINEER

NOV 08 2011
WARREN W. SCHAEFER, P.E.
STRUCTURAL ENGINEER
P.E. No. 44135

W. W. SCHAEFER ENGINEERING & CONSULTING, P.A. (CA 6809)
STRUCTURAL CONSULTING ENGINEERS
7480 150TH COURT NORTH
PALM BEACH GARDENS, FL 33418
PHONE: 561-744-3424

A1	ITEM "1A" WAS "1"; ADDED ITEMS "1B" & "1C"	01/29/03	K.P.S.	W.W.S.
	REVISION	DATE	DSN	CK	APPD

ARROW UNITED INDUSTRIES
A Division of Mestek, Inc.
450 RIVERSIDE DRIVE - P.O. BOX 69
WYALUSING, PA 18853
PHONE 570-746-1888; FAX 570-746-9286

EA-22 TEST LOUVER
ARCHITECTURAL & NON-ARCHITECTURAL LOUVER PARTS & EXTRUSIONS

CKD.BY		APPD.BY W.W.S.	SHEET: 6 of 7
DRN.BY W.W.S.		DWG. NO. 35972-4	REV. C
DATE 06-16-00			

ALLOWABLE WIND PRESSURE VS. JAMB CLIP SPACING AND PANEL WIDTH

PANEL WIDTH (INCHES)	CLIP SPACING (INCHES)	ALLOWABLE PRESSURE WITH MID SPAN MULLION (PSF)	ALLOWABLE PRESSURE WITHOUT MID SPAN MULLION (PSF)
16	8	150	150
	12	150	150
	16	150	140
	20	150	105
	24	150	70
20	8	150	150
	12	150	140
	16	150	112
	20	150	84
	24	150	56
24	8	150	140
	12	150	117
	16	150	93
	20	150	70
	24	125	47
28	8	150	82
	12	150	68
	16	150	54
	20	150	41
	24	107	27
30	8	150	62
	12	150	52
	16	150	41
	20	140	31
	24	93	–
36	8	150	–
	12	150	–
	16	150	–
	20	125	–
	24	83	–
42	8	150	–
	12	150	–
	16	142	–
	20	107	–
	24	71	–
48	8	150	–
	12	150	–
	16	125	–
	20	93	–
	24	62	–
54	8	150	–
	12	138	–
	16	111	–
	20	83	–
	24	55	–
60	8	150	–
	12	125	–
	16	100	–
	20	75	–
	24	50	–

MATERIAL LIST

NO.	DESCRIPTION	NOTES/SPECIFICATIONS
		PARTS/EXTRUSIONS
1A	STANDARD HEADER & SILL JAMB	6063-T5 ALUMINUM
1B	OPTIONAL SLOPED SILL	6063-T5 ALUMINUM
1C	OPTIONAL 1-PIECE HEADER	6063-T5 ALUMINUM
2	PARTIAL BLADE & HEAD	6063-T5 ALUMINUM
3	SIDE JAMB	6063-T5 ALUMINUM
4	LOUVER BLADE	6063-T5 ALUMINUM
5	BLADE SUPPORT BRACKET (2 1/2" LONG)	6063-T5 ALUMINUM
6	MULLION CAP	6063-T5 ALUMINUM; FULL LENGTH OF MULLION JAMBS
7	SILL ANGLE	6063-T5 ALUMINUM; FULL WIDTH OF PANEL
8	L2X2X1/4 JAMB CONNECTION ANGLE 2" LONG	6063-T5 ALUMINUM; WITHIN 4" OF JAMB ENDS & SPACED PER LOAD TABLE ON SHT. 2
9	L2X2X1/4 OPTIONAL JAMB CONNECTION ANGLE 2" LONG	A36 STEEL; WITHIN 4" OF JAMB ENDS & SPACED PER LOAD TABLE ON SHT. 2
10	L2X2X1/4 CONTINUOUS MULLION CONNECTION ANGLE	6063-T5 ALUMINUM; FULL LENGTH OF CHANNEL MULLION
11	L4X3X3/8 MULLION END CONNECTION ANGLE 2 3/4" LONG	A36 STEEL; 2 PER MULLION END
12	C5X6.7 MULLION	A36 STEEL; FULL HEIGHT OF PANELS
13	PARTIAL BLADE REINFORCEMENT PLATE (2 1/2" LONG)	6063-T5 ALUMINUM
14	PARTIAL BLADE REINFORCEMENT ANGLE (2 1/2" LONG)	6063-T5 ALUMINUM
15	OPEN	
		FASTENERS
16	1/2" X 2" A307 HEX HEAD PLATED STEEL OR S/STL BOLT	WITH FLAT WASHERS, LOCK WASHER & NUT; 2 PER MULLION END
17	NO. 14 S.S. SMS SCREWS	3 PER MULLION END CLIP WITH MIN. 1 1/2" WOOD EMBED
18	5/8" X 2 1/4" SLEEVE ANCHOR WITH FLAT WASHER	USA KINGPIN ANCHOR; 1 PER CHANNEL END CONNECTION ANGLE INTO CONCRETE ONLY
19	1/2" X 2" A307 HEX HEAD PLATED STEEL OR S/STL BOLT	WITH FLAT WASHERS, LOCK WASHER & NUT; 1 PER CHANNEL END CONNECTION ANGLE INTO STEEL FRAME
20	5/16-18 UNC X 1 1/2" HEX HEAD STEEL OR S/STL BOLT	WITH FLAT WASHER, LOCK WASHER & NUT; WITHIN 4" OF MULLION ENDS & MAX. 8" O.C.
21	NO. 8 X 3/4" SMS SCREW	1 AT EACH LOUVER BLADE SUPPORT BRACKET AT ARCHITECTURAL MAIN MULLIONS & ALL MID-SPAN MULLIONS
22	NO. 14 X 1 1/4" HILTI TEK SCREW	WITHIN 3/4" OF MULLION ENDS & MAX. 4" O.C. INTO FRAME
23	NO. 14 X 1" SMS SCREW	1 AT EACH LOUVER BLADE AT ALL ARCHITECTURAL MAIN MULLIONS & ALL MID-SPAN MULLIONS
24	NO. 7 X 1" SMS SCREW	2 PER EACH LOUVER BLADE END THROUGH JAMB & INTO BLADE SPLINES
25	NO. 14 X 1 1/4" HILTI TEK SCREW	2 PER EACH HEAD, SILL & SIDE JAMB CONNECTION ANGLE
26	1/2" X 2" LAG SCREW WITH FLAT WASHER	1 PER EACH HEAD, SILL & SIDE JAMB CONNECTION ANGLE INTO WOOD FRAME
27	5/8" X 2 1/4" SLEEVE ANCHOR WITH FLAT WASHER	USA KINGPIN ANCHOR; 1 PER EACH HEAD, SILL & SIDE JAMB CONNECTION ANGLE INTO CONCRETE ONLY
28	1/2" X 2" HEX HEAD A307 PLATED STEEL OR S/STL BOLT	WITH FLAT WASHERS, LOCK WASHER & NUT; 1 PER EA. JAMB CONNECTION ANGLE INTO STEEL FRAME
29	3/8" X 1 7/8" SLEEVE ANCHOR WITH FLAT WASHER	RED HEAD DYNABOLT WITH MIN 1 1/2" BLOCK/CONCRETE EMBED (1 PER FRAME SUPPORT CLIP)
30	NO. 8 X 1/2" SMS SCREW	WITHIN 2" OF MULLION ENDS & MAX. 12" O.C. (MULLION CAP TO MULLION)
31	NO. 7 X 1" SMS SCREWS	2 PER FRAME CORNER THROUGH SILL/HEAD FRAME & INTO JAMB SPLINES

PRODUCT REVISED
as complying with the Florida
Building Code
Acceptance No K-0422.20
Expiration Date 07/27/2018
By
Miami Dade Product Control

PRODUCT REVISED
as complying with the Florida
Building Code
Acceptance No 11-1117.07
Expiration Date 07/27/2013
By
Miami Dade Product Control

PRODUCT RENEWED
as complying with the Florida
Building Code
Acceptance No 13-0422.09
Expiration Date 07/27/2018
By
Miami Dade Product Control

PRESSURE TABLE NOTES:

1. WHEN THE PANEL WIDTH IS 30" OR LESS, NO MID SPAN MULLION IS REQUIRED PROVIDING COMPLIANCE WITH THE TABLE.
2. ALL PRESSURES IN THIS TABLE ARE FOR BOTH POSITIVE & NEGATIVE WIND PRESSURE.

WARREN W. SCHAEFER
LICENSE
No. 44135
STATE OF FLORIDA
PROFESSIONAL ENGINEER

NOV. 08 2011
WARREN W. SCHAEFER, P.E.
STRUCTURAL ENGINEER
P.E. No. 44135

W. W. SCHAEFER ENGINEERING & CONSULTING, P.A. (CA 6809)
STRUCTURAL CONSULTING ENGINEERS
7480 150TH COURT NORTH
PALM BEACH GARDENS, FL 33418
PHONE: 561-744-3424

A1	ITEM "1A" WAS "1"; ADDED ITEMS "1B" & "1C"	01/29/03	K.P.S.	W.W.S.
	REVISION	DATE	DRN CK	APPD

ARROW UNITED INDUSTRIES
A Division of Mestek, Inc.
450 RIVERSIDE DRIVE – P.O. BOX 69
WYALUSING, PA 18853
PHONE 570-746-1888; FAX 570-746-9286

EA-22 TEST LOUVER
ARCHITECTURAL & NON-ARCHITECTURAL LOUVER
MATERIAL LIST & LOAD TABLE

CKD.BY	APPD.BY W.W.S.	SHEET: 7 of 7
DRN.BY W.W.S.	DWG. NO. 35972-4	REV. C
DATE 06-16-00		