MIAMI-DADE COUNTY
DEPARTMENT OF REGULATORY AND ECONOMIC RESOURCES (RER)
BOARD AND CODE ADMINISTRATION DIVISION

MIAMI-DADE COUNTY
PRODUCT CONTROL SECTION
11805 SW 26 Street, Room 208
T (786) 315-2590 F (786) 315-2599
www.miamidade.gov/economy

NOTICE OF ACCEPTANCE (NOA)

Weather Shield Manufacturing, Inc.
One Weather Shield Plaza (P.O. Box 309)
Medford, WI 54451–0309

SCOPE:

This NOA is being issued under the applicable rules and regulations governing the use of construction materials. The documentation submitted has been reviewed and accepted by Miami-Dade County RER - Product Control Section to be used in Miami Dade County and other areas where allowed by the Authority Having Jurisdiction (AHJ).

This NOA shall not be valid after the expiration date stated below. The Miami-Dade County Product Control Section (In Miami Dade County) and/or the AHJ (in areas other than Miami Dade County) reserve the right to have this product or material tested for quality assurance purposes. If this product or material fails to perform in the accepted manner, the manufacturer will incur the expense of such testing and the AHJ may immediately revoke, modify, or suspend the use of such product or material within their jurisdiction. RER reserves the right to revoke this acceptance, if it is determined by Miami-Dade County Product Control Section that this product or material fails to meet the requirements of the applicable building code.

This product is approved as described herein, and has been designed to comply with the Florida Building Code, including the High Velocity Hurricane Zone.

DESCRIPTION: Series "Legacy 1103 Tilt" Aluminum Clad Wood Double Hung Window – L.M.I.

APPROVAL DOCUMENT: Drawing No. **1496**, titled "Legacy Aluminum Clad Double Hung Tilt Window. (Model 1103)", sheets 1 through 5 of 5, dated 08/28/06, with revision A1 dated 07/21/11, prepared by W. W. Schaefer Engineering & Consulting, P.A., signed and sealed by Warren W. Schaefer, P.E., bearing the Miami-Dade County Product Control Revision stamp with the Notice of Acceptance number and expiration date by the Miami-Dade County Product Control Section.

MISSILE IMPACT RATING: Large and Small Missile Impact Resistant

LABELING: Each unit shall bear a permanent label with the manufacturer's name or logo, city, state, model/series, and following statement: "Miami-Dade County Product Control Approved", unless otherwise noted herein.

RENEWAL of this NOA shall be considered after a renewal application has been filed and there has been no change in the applicable building code negatively affecting the performance of this product.

TERMINATION of this NOA will occur after the expiration date or if there has been a revision or change in the materials, use, and/or manufacture of the product or process. Misuse of this NOA as an endorsement of any product, for sales, advertising or any other purposes shall automatically terminate this NOA. Failure to comply with any section of this NOA shall be cause for termination and removal of NOA.

ADVERTISEMENT: The NOA number preceded by the words Miami-Dade County, Florida, and followed by the expiration date may be displayed in advertising literature. If any portion of the NOA is displayed, then it shall be done in its entirety.

INSPECTION: A copy of this entire NOA shall be provided to the user by the manufacturer or its distributors and shall be available for inspection at the job site at the request of the Building Official.

This NOA **revises NOA# 11-0822.11** and consists of this page 1 and evidence pages E-1 and E-2, as well as approval document mentioned above.

The submitted documentation was reviewed by **Manuel Perez, P.E.**

MIAMI-DADE COUNTY APPROVED

6/9/14

Weather Shield Manufacturing, Inc.

NOTICE OF ACCEPTANCE: EVIDENCE SUBMITTED

A. DRAWINGS

1. Manufacturer's die drawings and sections.
2. Drawing No **1496**, sheets 1 through 5 of 5, titled "Legacy Aluminum Clad Double Hung Tilt Window (Model 1103)", dated 08/28/06, with revision A1 dated 07/21/11, prepared by W. W. Schaefer Engineering & Consulting, P.A., signed and sealed by Warren W. Schaefer, P.E.
   (Submitted under previous NOA #11-0822.11)

B. TESTS

1. Test reports on: 1) Air Infiltration Test, per FBC, TAS 202-94
   2) Uniform Static Air Pressure Test, Loading per FBC TAS 202-94
   3) Water Resistance Test, per FBC, TAS 202-94
   4) Large Missile Impact Test per FBC, TAS 201-94
   5) Cyclic Wind Pressure Loading per FBC, TAS 203-94
   6) Forced Entry Test, per FBC 2411 3.2.1, TAS 202-94

   along with marked-up drawings and installation diagram of mulled double hung alum. clad wood windows, prepared by Stork Twin City Testing Corporation, Test Report No. **TCTCC- 180-7086 Rev. A**, dated 01/10/06-02/28/06, revised on 01/19/07, signed and sealed by Thomas A. Kolden, P.E.
   (Submitted under NOA #06-1005.07)
2. Test reports on: 1) Air Infiltration Test, per FBC, TAS 202-94
   2) Uniform Static Air Pressure Test, Loading per FBC TAS 202-94
   3) Water Resistance Test, per FBC, TAS 202-94
   4) Large Missile Impact Test per FBC, TAS 201-94
   5) Cyclic Wind Pressure Loading per FBC, TAS 203-94
   6) Forced Entry Test, per FBC 2411 3.2.1, TAS 202-94

   along with marked-up drawings and installation diagram of mulled double hung alum. clad wood windows with transom lites, prepared by Stork Twin City Testing Corporation, Test Report No. **TCTCC- 180-7087.2, Rev. A**, dated 01/10/06-02/28/06, revised on 01/19/07, signed and sealed by Thomas A. Kolden, P.E.
   (Submitted under NOA #06-1005.07)

C. CALCULATIONS

1. Anchor verification calculations and structural analysis, complying with FBC-2007 and FBC-2010, prepared by W. W. Schaefer Engineering & Consulting, P.A., dated 9/22/06 and revised on 08/02/11, signed and sealed by Warren W. Schaefer, P.E.
   (Submitted under previous NOA #11-0822.11)
2. Glazing complies with **ASTM E1300-04**

Manuel Perez

Manuel Perez, P.E.
Product Control Examiner
NOA No. 14-0424.08
Expiration Date: February 22, 2017
Approval Date: June 19, 2014

NOTICE OF ACCEPTANCE: EVIDENCE SUBMITTED

D. QUALITY ASSURANCE

1. Miami-Dade Department of Regulatory and Economic Resources (RER)

E. MATERIAL CERTIFICATIONS

1. Notice of Acceptance No. **12–1231.10** issued to **Eastman Chemical Company (MA)** for their "**Saflex Clear and Color Glass Interlayers**" dated 03/28/13, expiring on 05/21/16.

F. STATEMENTS

1. Statement letter of conformance, complying with **FBC-2010** and **FBC 5th Edition (2014)**, dated April 10, 2014, signed and sealed by Warren W. Schaefer, P.E.
2. Statement letter of no financial interest, dated August 02, 2011, signed and sealed by Warren W. Schaefer, P.E.
   (Submitted under previous NOA #11-0822.11)

G. OTHERS

1. Notice of Acceptance No. **11-0822.11**, issued to Weather Shield Manufacturing, Inc. for their Series "1103 Legacy Tilt" Aluminum Clad Wood Double Hung Window – L.M.I., approved on 10/20/11 and expiring on 02/22/17.

Manuel Perez

Manuel Perez, P.E.
Product Control Examiner
NOA No. 14-0424.08
Expiration Date: February 22, 2017
Approval Date: June 19, 2014

GENERAL NOTES:

1. THESE WINDOW SYSTEMS HAVE BEEN TESTED, ANALYZED & APPROVED FOR DESIGN PRESSURES NOT TO EXCEED THOSE SHOWN IN THE "ALLOWABLE DESIGN PRESSURE TABLE(S).
2. OPENINGS, BUCKING & BUCKING FASTENERS MUST BE PROPERLY DESIGNED & INSTALLED TO TRANSFER WIND LOADS TO THE STRUCTURE.
3. ALL HARDWARE & FASTENERS SHALL BE IN ACCORDANCE WITH THESE DRAWINGS & SHALL NOT VARY UNLESS SPECIFICALLY MENTIONED ON THE DRAWINGS. SPECIFIED ANCHOR EMBED TO BASE MATERIAL SHALL BE BEYOND WALL FINISH OR STUCCO.
4. THE DETAILS & SPECIFICATIONS SHOWN HEREIN REPRESENT THE PRODUCTS TESTED & PROPOSED FOR WATER, AIR, IMPACT, CYCLIC & UNIFORM STATIC AIR PRESSURE TESTING IN CONFORMANCE WITH THE FLORIDA BUILDING CODE PROTOCALS TAS--201, 202 & 203 FOR LARGE MISSILE IMPACT WINDOWS.
5. THESE WINDOW SYSTEMS HAVE BEEN DESIGNED IN ACCORDANCE WITH AND MEET THE REQUIREMENTS OF THE FLORIDA BUILDING CODE (FBC) INCLUDING HIGH VELOCITY HURRICANE ZONES (HVHZ).
6. IMPACT SHUTTERS ARE NOT REQUIRED WITH THESE WINDOWS.
7. ALL ANCHORS SECURING WINDOW FRAME TO PRESSURE TREATED BUCKS OR WOOD FRAMING SHALL BE CAPABLE OF RESISTING CORROSION CAUSED BY THE PRESSURE TREATING CHEMICALS IN THE WOOD.
8. DETERMINE THE POSITIVE & NEGATIVE DESIGN LOADS TO USE WHEN REFERENCING THESE DOCUMENTS IN ACCORDANCE WITH THE GOVERNING CODE AND GOVERNING WIND VELOCITY. FOR WIND LOAD CALCULATIONS IN ACCORDANCE WITH THE FLORIDA BUILDING CODE, A DIRECTIONALITY FACTOR OF Kd = 0.85 MAY BE APPLIED PER THE ASCE-7 STANDARD.
9. NO INCREASE IN ALLOWABLE STRESS HAS BEEN USED IN THE CERTIFICATION OF THIS PRODUCT. WIND LOAD DURATION FACTOR Cd = 1.6 WAS USED FOR WOOD SCREW ANALYSIS ONLY.
10. MATERIALS, INCLUDING BUT NOT LIMITED TO STEEL SCREWS, THAT COME INTO CONTACT WITH OTHER DISSIMILAR MATERIALS SHALL MEET THE REQUIREMENTS OF FLORIDA BUILDING CODE CHAPTER 20.
11. ALL WOOD MEMBERS OF WINDOWS THAT MAY POSSIBLY COME INTO CONTACT WITH MASONRY OR CONCRETE SUBSTRATES, ARE SUBJECT TO MOISTURE &/OR ARE SUBJECT TO THE OUTSIDE ENVIRONMENT SHALL BE OF AN APPROVED DURABLE SPECIES OR BE TREATED IN AN APPROVED METHOD WITH AN APPROVED PRESERVATIVE PER FBC SECTION 2326.

CORNER CONSTRUCTION:

FRAME CORNERS: WOOD/LVL JAMBS ARE RABBETED, BUTTED, SEALED WITH SILICONE & SECURED WITH THREE(3) 16 GAGE X 1/2" X 1 3/4" STAPLES PER CORNER. CLAD IS MITER CUT, CORNER KEYED, SEALED AND SECURED WITH 1 NO. 6 X 1 1/4" SMS 410 S.S. SCREW PER CORNER.
SASH CORNERS: WOOD SASH CORNERS ARE TONGUE & GROOVE FIT WITH CORNERS BUTTED AND SECURED WITH 1 F16 X 2" FINISH NAIL THROUGH THE STILE INTO THE RAIL. ALUMINUM CLAD CORNERS ARE MITER CUT, JOINED WITH CORNER KEY, SECURED WITH 2 NO. 6 X 1 1/4" SMS 410 S.S. SCREWS & SEALED WITH SILICONE.

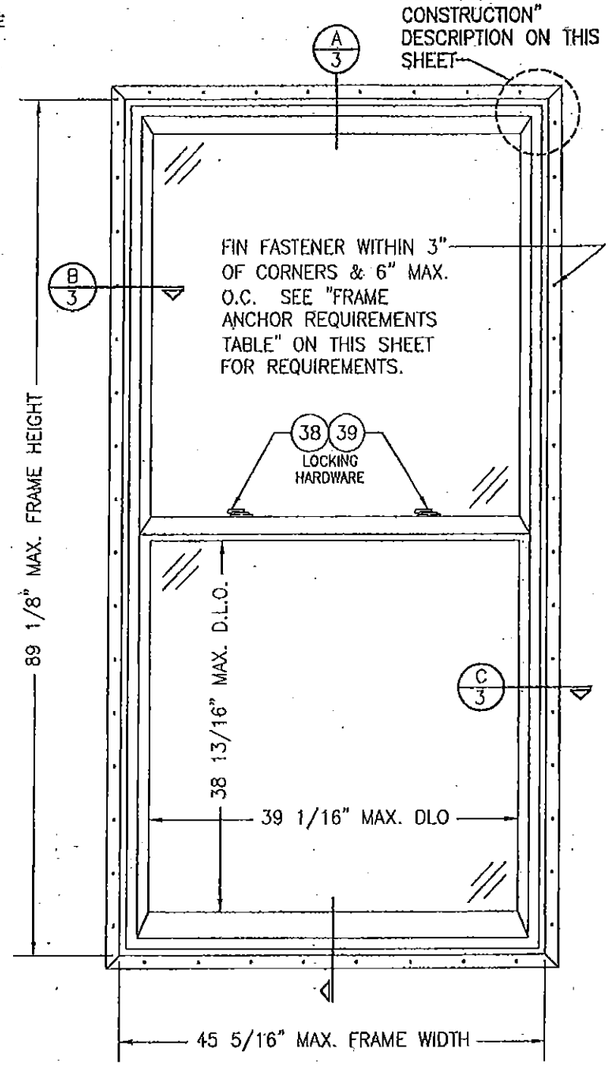

EXTERIOR ELEVATION: SINGLE WINDOW

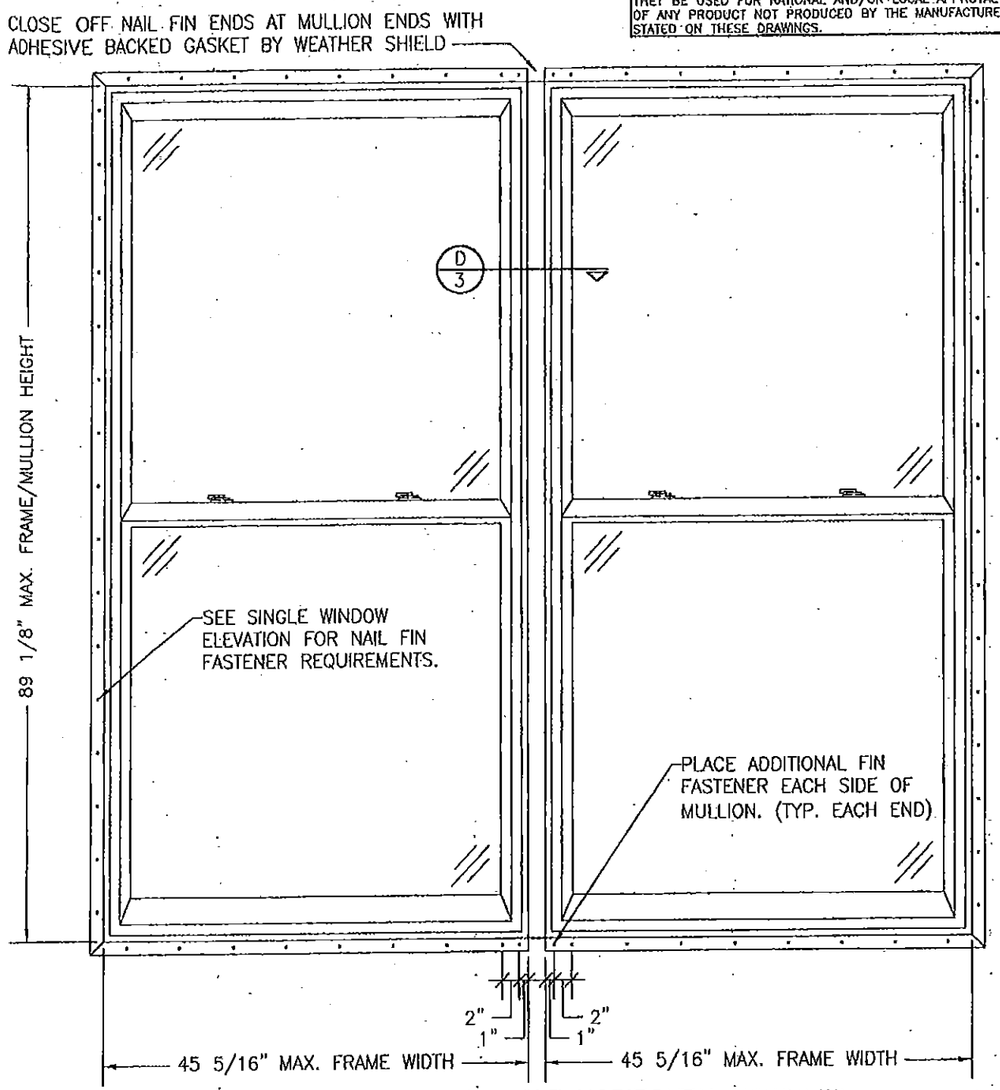

EXTERIOR ELEVATION: MULTIPLE HORIZONTAL WINDOWS

(FOR DETAIL NOT SHOWN, SEE SINGLE WINDOW ELEVATION)

NOTES: 1. ALL MULLED WINDOWS ARE RESTRICTED BY THE DIMENSIONS SPECIFIED.
2. UP TO 4 WINDOWS MAY BE STACKED HORIZONTALLY IN ONE OPENING PROVIDING THE OPENING IS DESIGNED TO SUPPORT THE WINDOWS & THEIR TRANSFERED WIND LOADS.

ALLOWABLE DESIGN PRESSURE (SINGLE & MULLED UNITS)
+55/-70 PSF

FRAME ANCHOR REQUIREMENTS TABLE			
NAILING FIN FASTENERS			
OPENING TYPE (SUBSTRATE)	NAIL FIN TO OPENING FASTENER TYPE	MINIMUM EMBED	MINIMUM EDGE DIST.
MIN. 2X4 WOOD FRAME OR BUCK (MIN. GR. 3 & G=0.55)	NO. 8 SMS SCREW	1 1/2"	1/2"

PRODUCT REVISED as complying with the Florida Building Code
Acceptance No 14-0424.08
Expiration Date Feb 22, 2017
By Manuel Perez
Miami-Dade Product Control

PRODUCT REVISED as complying with the Florida Building Code
Acceptance No 11-0822.11
Expiration Date FEB. 22, 2017
By Manuel Perez
Miami-Dade Product Control

WARREN W. SCHAEFER LICENSE No. 44135 STATE OF FLORIDA PROFESSIONAL ENGINEER

THESE DRAWINGS ARE APPLICABLE ONLY TO THE PRODUCT SPECIFIED. THEY MAY NOT BE USED FOR THE ASSEMBLY AND/OR INSTALLATION OF ANY OTHER PRODUCT NOR MAY THEY BE USED FOR RATIONAL AND/OR LOCAL APPROVAL OF ANY PRODUCT NOT PRODUCED BY THE MANUFACTURER STATED ON THESE DRAWINGS.

DRAWN BY: W.R.H. | CHECKED BY: W.W.S.
PLOT: 1=16 | DATE: 08/28/08

NO.	REVISION DESCRIPTION	BY	DATE
A1	ADDED LOCK OPTION	W.R.H.	07/21/11

DRAWING TITLE
LEGACY ALUMINUM CLAD DOUBLE HUNG TILT WINDOW (MODEL 1103)

MANUFACTURER
WEATHER SHIELD WINDOWS & DOORS
ONE WEATHER SHIELD PLAZA
MEDFORD, WI 54451
715-748-6555

CONSULTANTS
W. W. SCHAEFER ENGINEERING & CONSULTING, P.A. (CA 6809)
7480 150TH COURT NORTH
PALM BEACH GARDENS, FL 33418
PHONE: 561-744-3424

CERTIFICATION
AUG 03 2011
WARREN W. SCHAEFER, P.E.
P.E. NO. 44135

DRAWING NO. 1496 | REV. A
SHEET NO. 1 OF 5

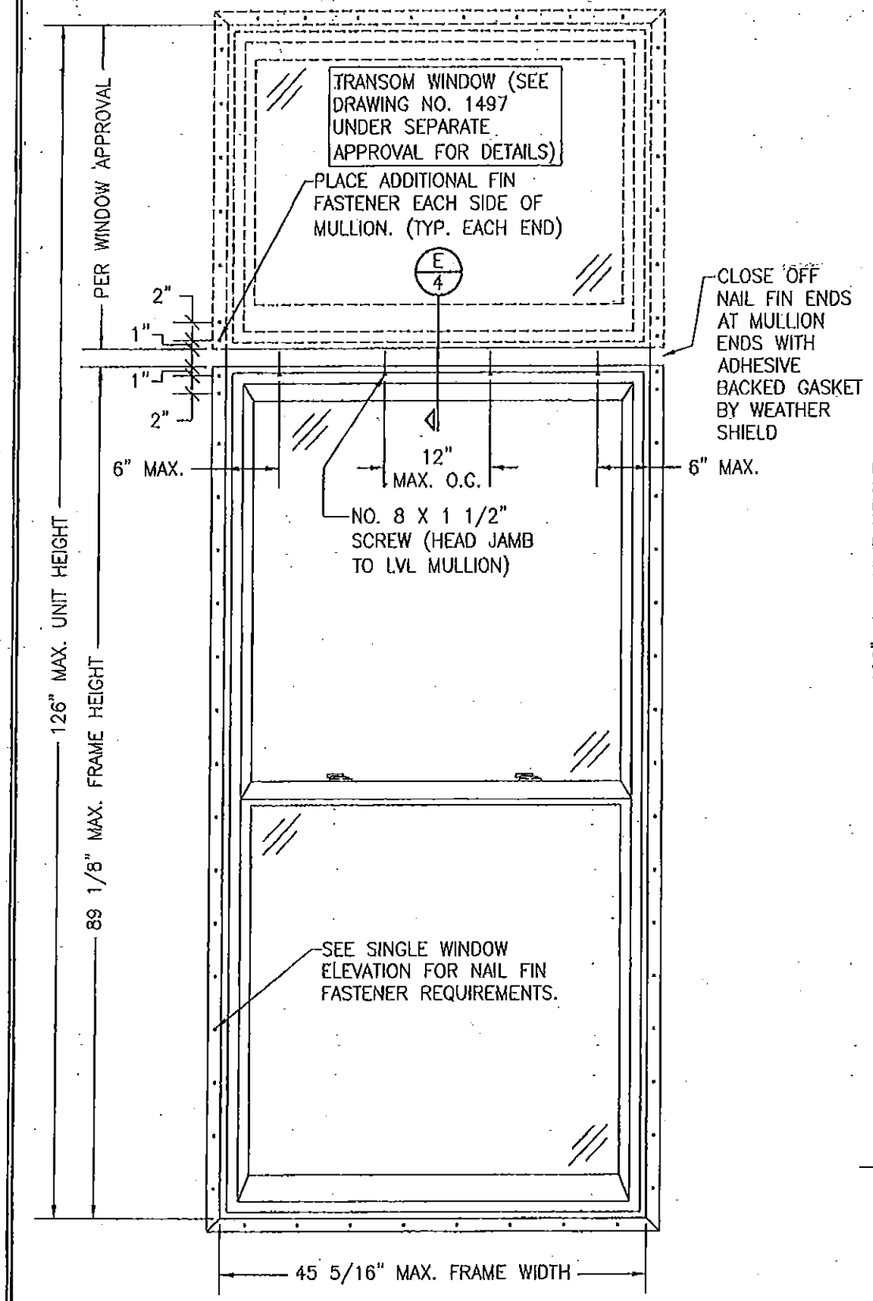

EXTERIOR ELEVATION:
SINGLE WINDOW WITH TRANSOM

(FOR DETAIL NOT SHOWN, SEE SINGLE WINDOW ELEVATION ON SHEET 1)

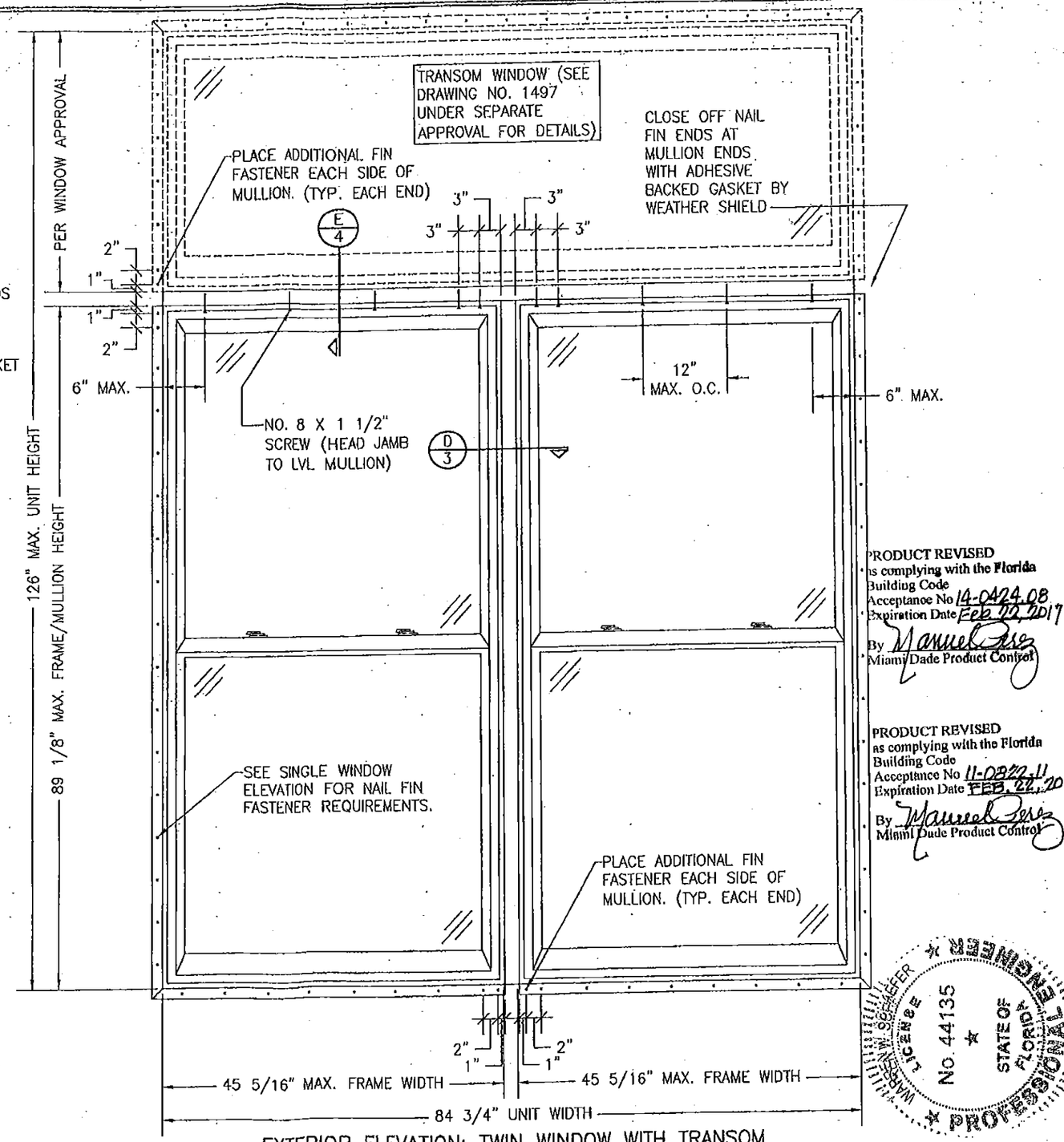

EXTERIOR ELEVATION: TWIN WINDOW WITH TRANSOM

(FOR DETAIL NOT SHOWN, SEE SINGLE WINDOW ELEVATION ON SHEET 1)

NOTE: ALL MULLED WINDOWS ARE RESTRICTED BY THE DIMENSIONS SPECIFIED.

PRODUCT REVISED
as complying with the Florida Building Code
Acceptance No 14-0424.08
Expiration Date Feb 22, 2017
By Manuel Perez
Miami Dade Product Control

PRODUCT REVISED
as complying with the Florida Building Code
Acceptance No 11-0822.11
Expiration Date FEB. 22, 2017
By Manuel Perez
Miami Dade Product Control

WARREN W. SCHAEFER LICENSE No. 44135 STATE OF FLORIDA PROFESSIONAL ENGINEER

DRAWN BY: W.R.M.	CHECKED BY: W.W.S.
PLOT: 1=16	DATE: 08/28/08

NO.	REVISION DESCRIPTION	BY	DATE

DRAWING TITLE
LEGACY ALUMINUM CLAD DOUBLE HUNG TILT WINDOW (MODEL 1103)

MANUFACTURER
WEATHER SHIELD WINDOWS & DOORS
ONE WEATHER SHIELD PLAZA
MEDFORD, WI 54451
715-748-6555

CONSULTANTS
W. W. SCHAEFER ENGINEERING & CONSULTING, P.A. (CA 6809)
7480 150TH COURT NORTH
PALM BEACH GARDENS, FL 33418
PHONE: 561-744-3424

CERTIFICATION
AUG 03 2011
WARREN W. SCHAEFER, P.E.
P.E. NO. 44135

DRAWING NO. 1496
REV. A
SHEET NO. 2 OF 5

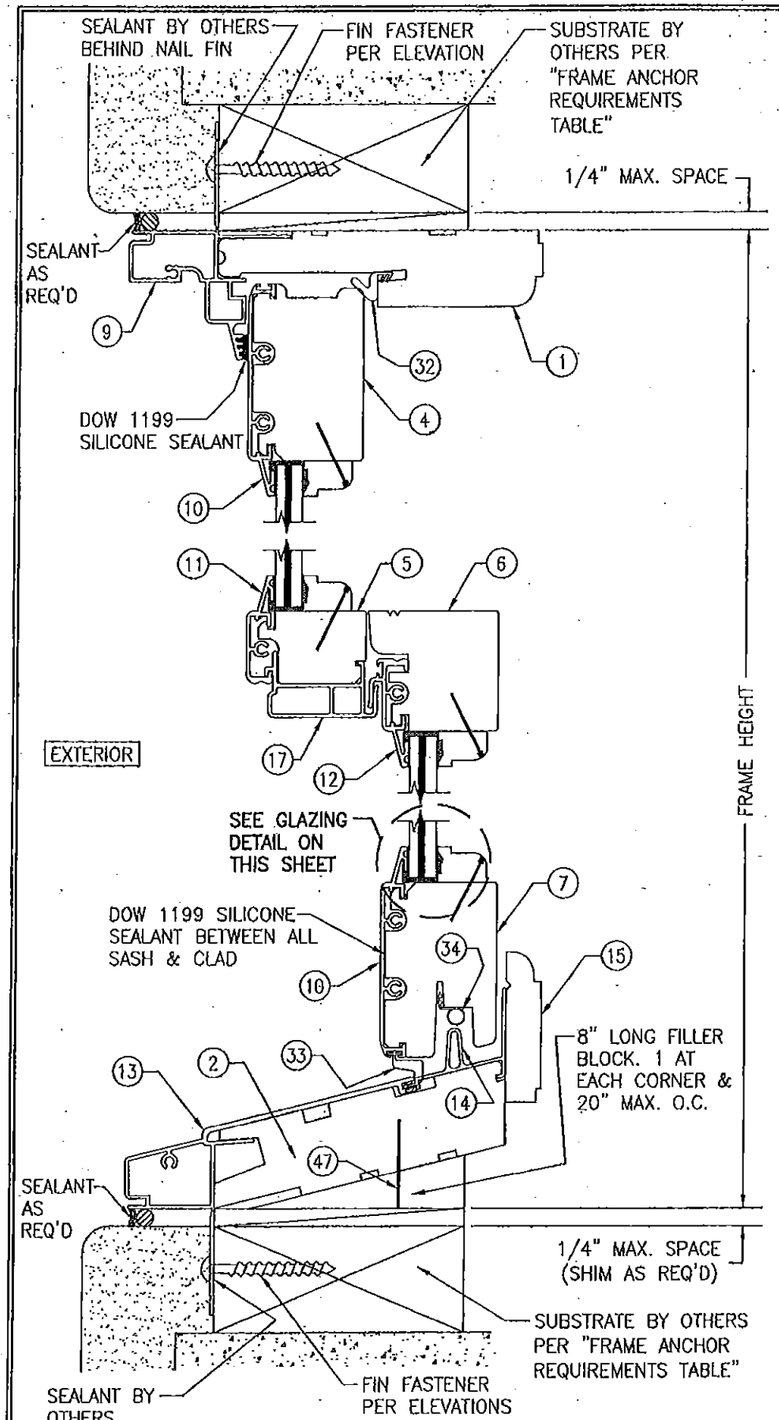

SECTION A/3
SCALE: 1/2 FULL

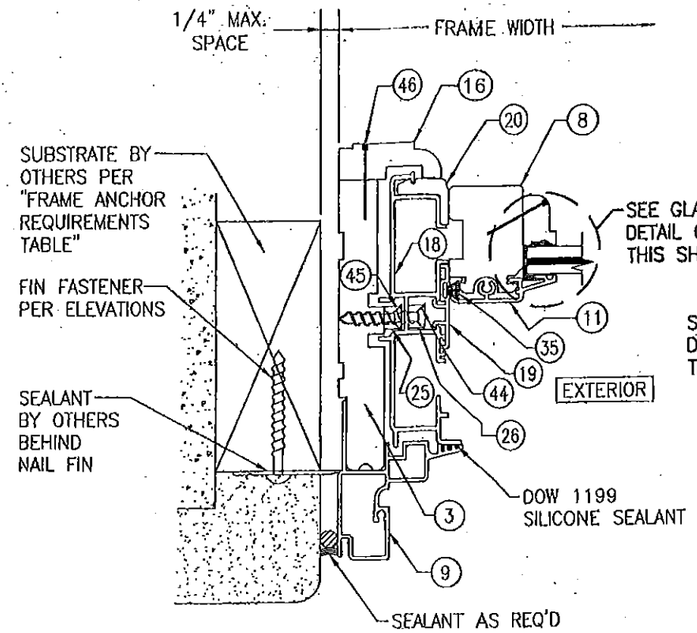

SECTION B/3
SCALE: 1/2 FULL

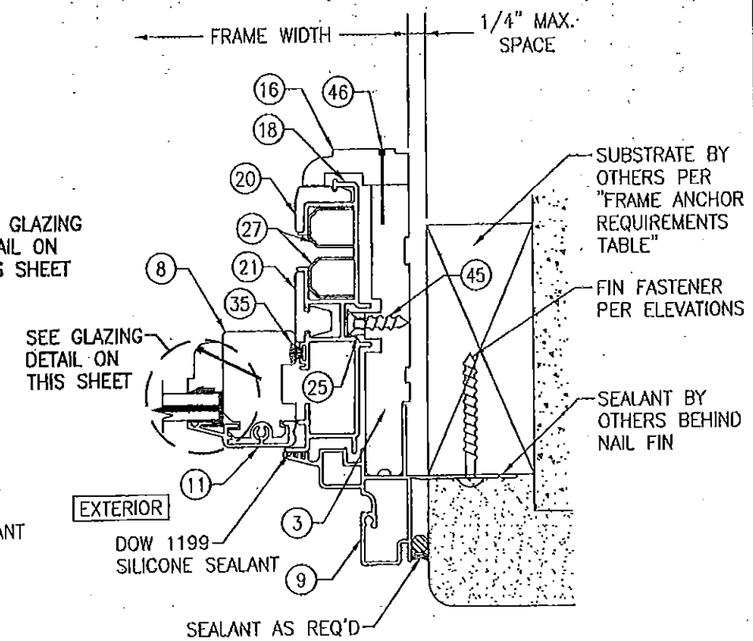

SECTION C/3
SCALE: 1/2 FULL

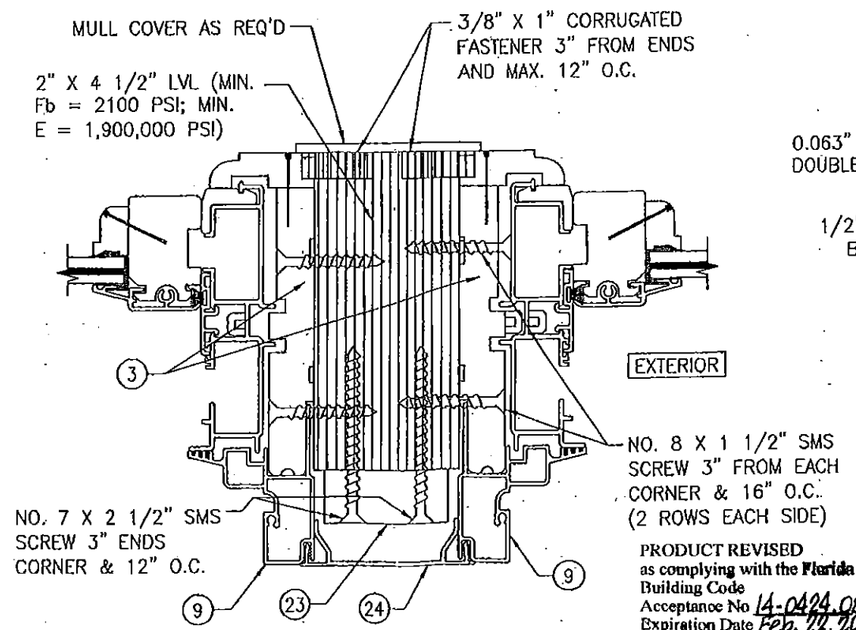

SECTION D/3
SCALE: 1/2 FULL
(FOR DETAIL NOT SHOWN, SEE OTHER SECTIONS)

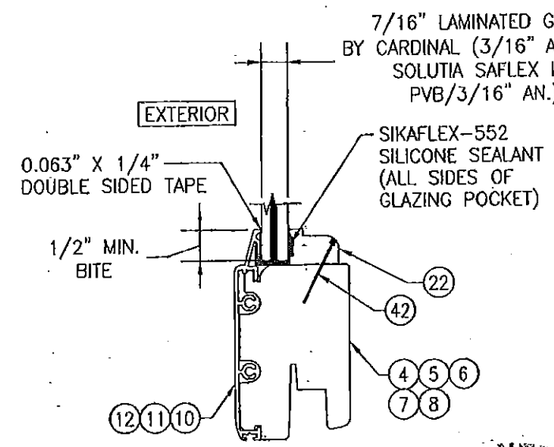

TYP. GLAZING DETAIL

PRODUCT REVISED
as complying with the Florida Building Code
Acceptance No 14-0424.08
Expiration Date Feb. 22, 2017
By Manuel Perez
Miami Dade Product Control

PRODUCT REVISED
as complying with the Florida Building Code
Acceptance No 11-0822.11
Expiration Date Feb. 22, 2017
By Manuel Perez
Miami Dade Product Control

WARREN W. SCHAEFER LICENSE No. 44135 STATE OF FLORIDA PROFESSIONAL ENGINEER

NO.	REVISION DESCRIPTION	BY	DATE

DRAWN BY: W.R.M
CHECKED BY: W.W.S.
PLOT: 1-2
DATE: 08/28/06

DRAWING TITLE
LEGACY ALUMINUM CLAD DOUBLE HUNG TILT WINDOW (MODEL 1103)

MANUFACTURER
WEATHER SHIELD WINDOWS & DOORS
ONE WEATHER SHIELD PLAZA
MEDFORD, WI 54451
715-748-6555

CONSULTANTS
W. W. SCHAEFER ENGINEERING & CONSULTING, P.A. (CA 6809)
7480 150TH COURT NORTH
PALM BEACH GARDENS, FL 33418
PHONE: 561-744-3424

CERTIFICATION
AUG 08 2011
WARREN W. SCHAEFER, P.E.
P.E. NO. 44135

DRAWING NO. 1496
REV. A
SHEET NO. 3 OF 5

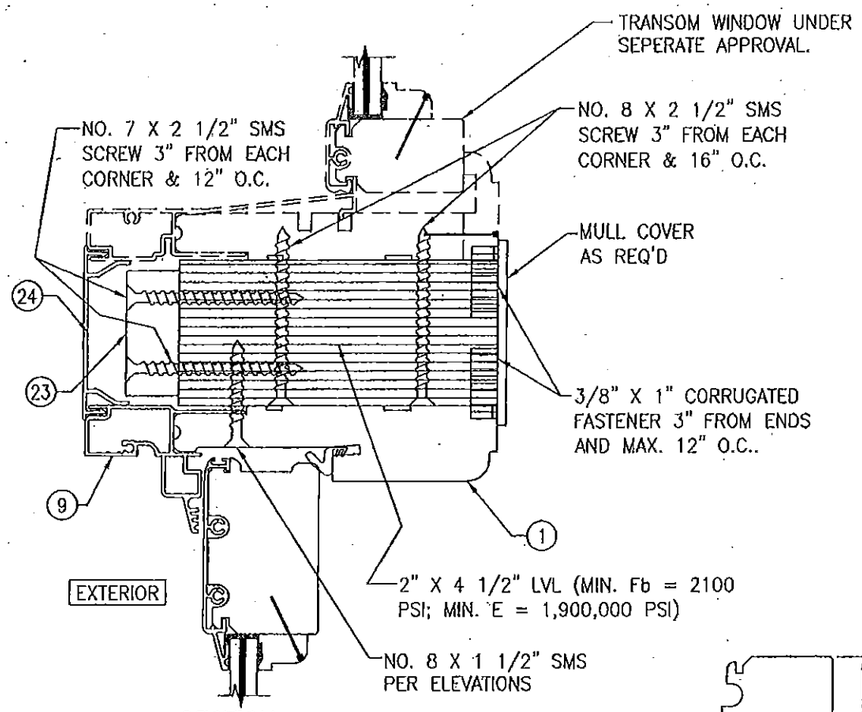

SECTION E/4
SCALE: 1/2 FULL
(FOR DETAIL NOT SHOWN, SEE OTHER SECTIONS)

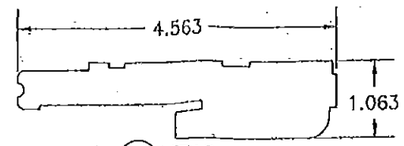

1 HEAD

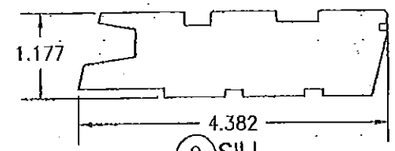

2 SILL

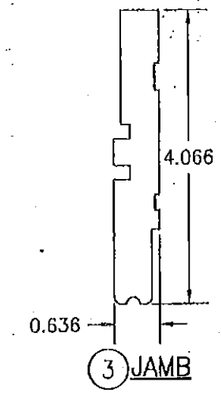

3 JAMB

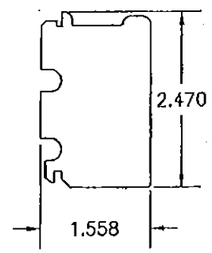

4 HEAD RAIL

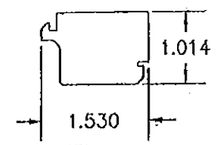

5 UPPER CHECK RAIL

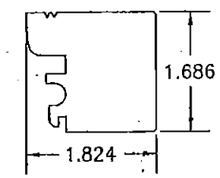

6 LOWER CHECK RAIL

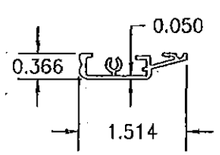

11 STILE & UPPER CHECK RAIL CLAD

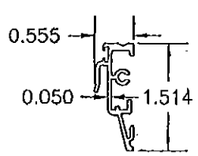

12 LOWER CHECK RAIL CLAD

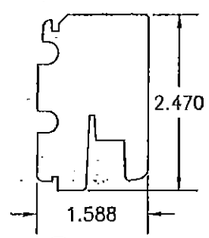

7 SILL RAIL

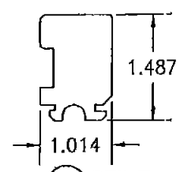

8 STILE

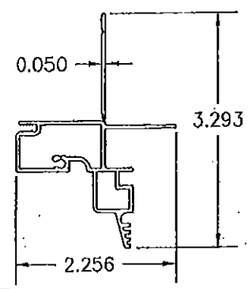

9 HEAD/JAMB CLAD

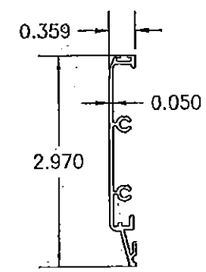

10 RAIL CLAD

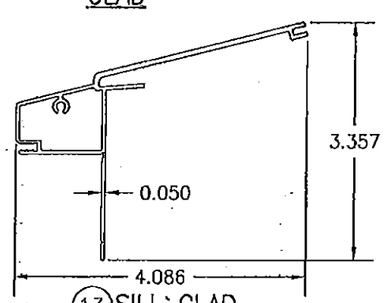

13 SILL CLAD

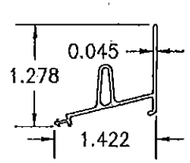

14 SILL RISER

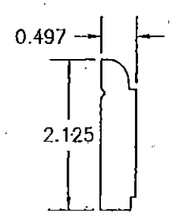

15 SILL INSIDE STOP

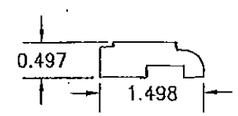

16 JAMB INSIDE STOP

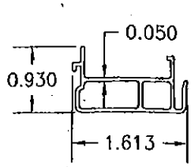

17 UPPER CHECK RAIL INTERLOCK

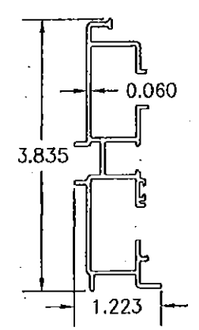

18 JAMB LINER

PRODUCT REVISED
as complying with the Florida Building Code
Acceptance No 14-0424.08
Expiration Date Feb. 22, 2017
By Manuel Perez
Miami Dade Product Control

PRODUCT REVISED
as complying with the Florida Building Code
Acceptance No 11-0822.11
Expiration Date Feb. 22, 2017
By Manuel Perez
Miami Dade Product Control

WARREN W. SCHAEFER LICENSE No. 44135 STATE OF FLORIDA PROFESSIONAL ENGINEER

DRAWN BY: W.R.M	CHECKED BY: W.W.S.
PLOT: 1=2	DATE: 08/28/08

NO.	REVISION DESCRIPTION	BY	DATE

DRAWING TITLE
LEGACY ALUMINUM CLAD DOUBLE HUNG TILT WINDOW (MODEL 1103)

MANUFACTURER
WEATHER SHIELD WINDOWS & DOORS
ONE WEATHER SHIELD PLAZA
MEDFORD, WI 54451
715-748-6555

CONSULTANTS
W. W. SCHAEFER ENGINEERING & CONSULTING, P.A. (CA 6809)
7480 150TH COURT NORTH
PALM BEACH GARDENS, FL 33418
PHONE: 561-744-3424

CERTIFICATION
AUG 03 2011
WARREN W. SCHAEFER, P.E. P.E. NO. 44135

DRAWING NO. 1496 REV. A
SHEET NO. 4 OF 5

ITEM #	PART #	ITEM DESCRIPTION	MANUFACTURER/NOTES
		PARTS	
1	08-1008-01	HEAD	* PONDEROSA PINE
2	08-1003-01	SILL	* PONDEROSA PINE
3	60-4931-01	JAMB	LVL (Fb = 2,100 PSI; E = 1,900,000 PSI)
4	08-1897-02	HEAD RAIL	* PONDEROSA PINE
5	70-0502-01	UPPER CHECK RAIL	* PONDEROSA PINE
6	60-1588-01	LOWER CHECK RAIL	* PONDEROSA PINE
7	08-1022-01	SILL RAIL	* PONDEROSA PINE
8	08-1025-01	STILE	* PONDEROSA PINE
9	P0119700	HEAD/JAMB CLAD	6063-T5 ALUMINUM
10	04-1017-01	RAIL CLAD	6063-T5 ALUMINUM
11	60-1596-01	STILE & UPPER CHECL RAIL CLAD	6063-T5 ALUMINUM
12	60-1584-01	LOWER CHECK RAIL CLAD	6063-T5 ALUMINUM
13	P0120600	SILL CLAD	6063-T5 ALUMINUM
14	224-063	SILL RISER	6063-T5 ALUMINUM
15	08-1005-01	SILL INSIDE STOP	* PONDEROSA PINE
16	08-1892-02	JAMB INSIDE STOP	* PONDEROSA PINE
17	70-0501-01	UPPER CHECK RAIL INTERLOCK	6063-T5 ALUMINUM
18	60-2493-01	JAMB LINER	VINYL BY FIVE STAR PLASTICS
19	60-2490-01	WEATHER STRIP CARRIER	6063-T5 ALUMINUM
20	60-2493-01	JAMB LINER INSERT (INNER)	* PONDEROSA PINE
21	60-2487-01	JAMB LINER INSERT (UPPER)	* PONDEROSA PINE
22	08-1492-02	GLAZING BEAD	* PONDEROSA PINE
23	–	MULLION BLOCK	* PONDEROSA PINE
24	04-2225-02	MULLION COVER	6063-T5 ALUMINUM
25	60-5437-01	JAMB LINER REINFORCEMENT	PVC/FIVE STAR PLASTICS
26	60-5437-01	JAMB LINER REINFORCEMENT	PVC/FIVE STAR PLASTICS
27	60-4832-01	BLOCK & TACKLE BALANCE HOUSINGS	BALANCE SYSTEMS, INC.
		SEALS AND SEALANTS	
32	12-0011-M01	WEATHERSTRIP	VINYL/SCHLEGEL
33	12-0055-M0456	WEATHERSTRIP	VINYL/SCHLEGEL
34	02-V8045	BULB WEATHERSTRIP	VINYL
35	12-0030-V0166	WEATHERSTRIP	PILE/AMESBURY
		HARDWARE	
38	60-3526-01	LOCK ASSEMBLY	5 STAR PLASTICS
39	80-0857-01	LOCK ASSEMBLY	TRUTH
		MISC. FASTENERS	
42	–	18 GA. X 1" BRAD	WITHIN 3" OF ENDS & 8" O.C.
44	–	NO: 8 X 1 1/4" SCREW	5 PER REINFORCEMENT
45	–	NO. 8 X 7/8" SCREW	2 PER REINFORCEMENT
46	–	18 GA. X 3/16" X 1 1/4" STAPLE	WITHIN 3" OF ENDS & 10" O.C.
47	–	7/16" CROWN X 1 1/8"	MIN. 4 PER BLOCK

* WOOD USED WITH TEST UNITS WAS GRADE 2 PONDEROSA PINE. ALTERNATE WOOD SPECIES TO BE APPLICABLE WITH THESE WINDOWS IS MIN. GRADE 2 MAHOGANY, SOUTHERN PINE, OAK, CHERRY, MAPLE, DOUGLAS FIR & CYPRUS.

NOTE: ALL WOOD IS RECEIVED BY WEATHER SHIELD AS GRADE 2, BUT IS MACHINED BY WEATHER SHIELD TO A SELECT GRADE USE.

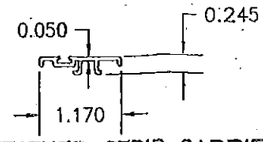

(19) WEATHER STRIP CARRIER

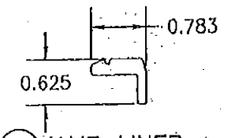

(20) JAMB LINER INSERT (INNER)

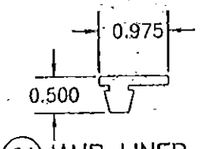

(21) JAMB LINER INSERT (UPPER)

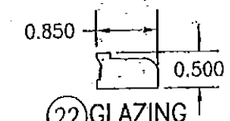

(22) GLAZING BEAD

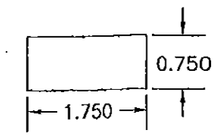

(23) MULLION BLOCK

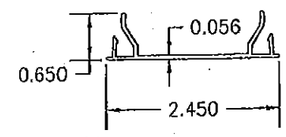

(24) MULLION COVER

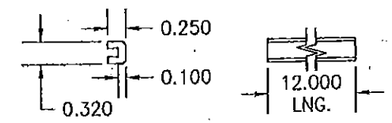

(25) JAMB LINER REINFORCEMENT

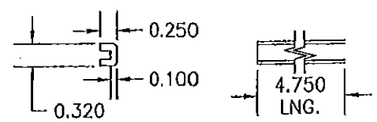

(26) JAMB LINER REINFORCEMENT

PRODUCT REVISED
as complying with the Florida Building Code
Acceptance No 14-0424.08
Expiration Date Feb. 22, 2017
By Manuel Perez
Miami Dade Product Control

PRODUCT REVISED
as complying with the Florida Building Code
Acceptance No 11-0822.11
Expiration Date FEB. 22, 2017
By Manuel Perez
Miami Dade Product Control

WARREN W. SCHAEFER LICENSE No. 44135 STATE OF FLORIDA PROFESSIONAL ENGINEER

NO.	REVISION DESCRIPTION	BY	DATE

DRAWN BY: W.R.M
CHECKED BY: W.W.S.
PLOT: 1=2
DATE: 08/28/08

DRAWING TITLE
LEGACY ALUMINUM CLAD DOUBLE HUNG TILT WINDOW (MODEL 1103)

MANUFACTURER
WEATHER SHIELD WINDOWS & DOORS
ONE WEATHER SHIELD PLAZA
MEDFORD, WI 54451
715-748-6555

CONSULTANTS
W. W. SCHAEFER ENGINEERING & CONSULTING, P.A. (CA 6809)
7480 150TH COURT NORTH
PALM BEACH GARDENS, FL 33418
PHONE: 561-744-3424

CERTIFICATION
AUG 03 2011
WARREN W. SCHAEFER, P.E.
P.E. NO. 44135

DRAWING NO. 1496
REV. A
SHEET NO. 5 OF 5