MIAMI-DADE COUNTY
DEPARTMENT OF REGULATORY AND ECONOMIC RESOURCES (RER)
BOARD AND CODE ADMINISTRATION DIVISION

MIAMI–DADE COUNTY, FLORIDA
PRODUCT CONTROL SECTION
11805 SW 26 Street, Room 208
T (786) 315–2590 F (786) 315–2599
www.miamidade.gov/economy

NOTICE OF ACCEPTANCE (NOA)

Tischler und Sohn (USA) Ltd.
Six Suburban Avenue
Stamford, CT 06901

SCOPE:

This NOA is being issued under the applicable rules and regulations governing the use of construction materials. The documentation submitted has been reviewed and accepted by Miami–Dade County RER–Product Control Section to be used in Miami–Dade County and other areas where allowed by the Authority Having Jurisdiction (AHJ).

This NOA shall not be valid after the expiration date stated below. The Miami–Dade County Product Control Section (In Miami–Dade County) and/ or the AHJ (in areas other than Miami–Dade County) reserve the right to have this product or material tested for quality assurance purposes. If this product or material fails to perform in the accepted manner, the manufacturer will incur the expense of such testing and the AHJ may immediately revoke, modify, or suspend the use of such product or material within their jurisdiction. RER reserves the right to revoke this acceptance, if it is determined by Miami–Dade County Product Control Section that this product or material fails to meet the requirements of the applicable building code.

This product is approved as described herein, and has been designed to comply with the Florida Building Code, including the High Velocity Hurricane Zone.

DESCRIPTION: Series "Lift & Slide" Wood Sliding Glass Doors – L.M.I.

APPROVAL DOCUMENT: Drawing No. **1755**, titled Series "Wood Impact Lift & Slide Door", sheets 01 through 32 of 32, dated 03/29/12, prepared by manufacture, with the latest revision, dated 08/21/12, signed and sealed by Warren W. Schaefer, P. E., bearing the Miami–Dade County Product Control Section Revision stamp with the Notice of Acceptance number and expiration date by the Miami–Dade County Product Control Section.

MISSILE IMPACT RATING: Large and Small Missile Impact Resistant

LABELING: Each unit shall bear a permanent label with the manufacturer's name or logo, **Wedel/ Hamburg (Schleswig–Holzstein), Germany**, series, and following statement: "Miami–Dade County Product Control Approved", unless otherwise noted herein.

RENEWAL of this NOA shall be considered after a renewal application has been filed and there has been no change in the applicable building code negatively affecting the performance of this product.

TERMINATION of this NOA will occur after the expiration date or if there has been a revision or change in the materials, use, and/ or manufacture of the product or process. Misuse of this NOA as an endorsement of any product, for sales, advertising or any other purposes shall automatically terminate this NOA. Failure to comply with any section of this NOA shall be cause for termination and removal of NOA.

ADVERTISEMENT: The NOA number preceded by the words Miami–Dade County, Florida, and followed by the expiration date may be displayed in advertising literature. If any portion of the NOA is displayed, then it shall be done in its entirety.

INSPECTION: A copy of this entire NOA shall be provided to the user by the manufacturer or its distributors and shall be available for inspection at the job site at the request of the Building Official.

This NOA **revises NOA No. 12–0516.08** and consists of this page 1 and evidence pages E–1, E–2 and E–3, as well as approval document mentioned above.

The submitted documentation was reviewed by **Jaime D. Gascon, P.E.**

MIAMI-DADE COUNTY APPROVED

J GASCON 6/3/14

Tischler und Sohn (USA) Ltd.

NOTICE OF ACCEPTANCE: EVIDENCE SUBMITTED

A. DRAWINGS

1. Manufacturer's die drawings and sections.
   (Submitted under previous NOA No. 12–0516.08)
2. Drawing No. **1755**, titled Series "Wood Impact Lift & Slide Door", sheets 01 through 32 of 32, dated 03/29/12, prepared by manufacture, with the latest revision dated 08/21/12, signed and sealed by Warren W. Schaefer, P.E.
   (Submitted under previous NOA No. 12–0516.08)

B. TESTS

1. Test reports on: 1) Air Infiltration Test, per FBC, TAS 202–94
   2) Uniform Static Air Pressure Test, Loading per FBC TAS 202–94
   3) Water Resistance Test, per FBC, TAS 202–94
   4) Large Missile Impact Test per FBC, TAS 201–94
   5) Cyclic Wind Pressure Loading per FBC, TAS 203–94
   6) Forced Entry Test, per FBC 2411.3.2.1, ASTM F 588–07 and ASTM F 842–04

   along with marked–up drawings and installation diagram of a Wood Lift and Slide Door, prepared by Architectural Testing, Inc., Test Report No **ATI–A9319.01–109–18**, dated 03/01/12, signed and sealed by Michael D. Stremmel, P. E.
   (Submitted under previous NOA No. 12–0516.08)

C. CALCULATIONS

1. Anchor calculations and structural analysis, complying with FBC, prepared by W. W. Schaefer Engineering & Consulting, P. A., dated 03/29/12, signed and sealed by Warren W. Schaefer, P. E.
   (Submitted under previous NOA No. 12–0516.08)
2. **Glazing complies with ASTM E1300–04/ 09**

D. QUALITY ASSURANCE

1. Miami–Dade Department of Regulatory and Economic Resources (RER).

E. MATERIAL CERTIFICATIONS

1. Notice of Acceptance No. **12–1231.08** issued to **Eastman Chemical Company (MA)** for their **"Saflex CP – Saflex and Saflex HP Composite Glass Interlayers with PET Core"** dated 03/28/13, expiring on 12/11/18.

Jaime D. Gascon, P. E.
Product Control Section Supervisor
NOA No. 14–0428.14
Expiration Date: September 13, 2017
Approval Date: June 12, 2014

E. MATERIAL CERTIFICATIONS (CONTINUED)

2. Test reports on:1) Test Method for Mechanical Fasteners in Wood per FBC and per ASTM D 1761–06;
2) Standard Test Methods for Mechanical Properties of Lumber and Wood–Base Structural Material per FBC and ASTM D4761–05.

along with marked–up drawings and installation diagram of durability of wood–base structural composite lumber and panels, prepared by Architectural Testing, Inc., Test Report No. **ATI–86006.01–106–18**, dated 12/12/08, signed and sealed by Joseph A. Reed, P. E.
(Submitted under previous NOA No. 12–0516.08)

F. STATEMENTS

1. Statement letter of no financial interest, independence, conformance to and complying with **FBC 5th Edition (2014)**, issued by W. W. Schaefer Engineering & Consulting, P. A., dated 04/15/14, signed and sealed by Warren W. Schaefer, P. E.

2. Statement letter of conformance and complying with **FBC–2010** and **ANSI/ AAMA/ NWWDA 101/ I.S.2–97**, issued by W. W. Schaefer Engineering & Consulting, P. A., dated 08/21/12, signed and sealed by Warren W. Schaefer, P. E.
(Submitted under previous NOA No. 12–0516.08)

3. Statement letter of no financial interest and independence, issued by W. W. Schaefer Engineering & Consulting, P. A., dated 03/29/12, signed and sealed by Warren W. Schaefer, P. E.
(Submitted under previous NOA No. 12–0516.08)

4. Laboratory addendum letter for Test Report No. **ATI–A9319.01–109–18**, issued by Architectural Testing, Inc. dated 04/09/12, signed and sealed by Michael D. Stremmel, P. E.
(Submitted under previous NOA No. 12–0516.08)

5. Laboratory compliance letter for Test Report No. **ATI–A9319.01–109–18**, issued by Architectural Testing, Inc. dated 03/01/12, signed and sealed by Michael D. Stremmel, P. E.
(Submitted under previous NOA No. 12–0516.08)

6. Proposal No. 10–1241R issued by Product Control, dated 01/06/11, signed by Ishaq Chanda, P. E. and Jaime D. Gascon, P. E.
(Submitted under previous NOA No. 12–0516.08)

7. Laboratory compliance letter for Test Report No. **ATI–86006.01–106–18**, issued by Architectural Testing, Inc. dated 04/09/12, signed and sealed by Michael D. Stremmel, P. E.
(Submitted under previous NOA No. 12–0516.08)

Jaime D. Gascon, P. E.
Product Control Section Supervisor
NOA No. 14–0428.14
Expiration Date: September 13, 2017
Approval Date: June 12, 2014

F. STATEMENTS (CONTINUED)

8. Proposal No. 10–1241 issued by Product Control, dated 01/06/10, revised 01/06/11, signed by Ishaq Chanda, P. E.
(Submitted under previous NOA No. 12–0516.08)

9. Distributor Agreement between Tischler/ Cornelius Korn, G.m.b.H, Wedel/ Hamburg (Schleswig–Holzstein), Germany and Tischler und Sohn (USA), Ltd., Stamford, Connecticut, USA, dated 05/15/2012, signed by Wilhelm Korn and by Timothy K. Carpenter, respectively.
(Submitted under previous NOA No. 12–0516.08)

G. OTHERS

1. Notice of Acceptance No. **12–0516.08**, issued to Tischler und Sohn (USA) Ltd. for their Series "**Lift & Slide Wood Sliding Glass Doors**", approved on 09/13/12 and expiring on 09/13/17.

Jaime D. Gascon, P. E.
Product Control Section Supervisor
NOA No. 14–0428.14
Expiration Date: September 13, 2017
Approval Date: June 12, 2014

FRAME SCREW MOUNT NOTES:

1. POSITION OF FRAME/SILL SCREW MAY BE AT ANY TRACK RUN LOCATION ALONG THE FRAME/SILL MEMBER.
2. SUBSTRATE POSITION MAY VARY DEPENDING ON POSITION OF FRAME SCREW.
3. SUBSTRATE DEPTH MAY BE REQUIRED TO BE INCREASED OVER THAT SPECIFIED IN THE SECTIONS IF NEEDED TO PROPERLY STABILIZE THE DOOR FRAME & SEAL THE OPENING.
4. WITH DEEP FRAMES, INSTALLER MAY OPTION TO ADD A ROW OF FRAME SCREWS IF DEEMED NECESSARY TO STABILIZE THE FRAME MEMBER & RESIST POTENTIAL CUPPING OF THAT MEMBER.

FRAME ANCHOR REQUIREMENTS TABLE

(1) OPENING TYPE (SUBSTRATE)	FRAME/SILL/CLIP/BRACKET TO OPENING FASTENER TYPE	MINIMUM EMBED	MINIMUM EDGE DIST.
FRAME/SILL SCREWS			
MIN. 2X_ WOOD FRAME OR BUCK (MIN. GR. 3 & G=0.55)	NO. 14 SMS/WOOD SCREW OR 1/4" BTI SCREW	1 1/4"	1"
MIN. 18 GA. 33 KSI METAL STUD	1/4" GR. 5 SELF TAP/DRILLING SCREW	FULL	1/2"
MIN. 1/8" THK A36 STEEL	1/4" GR. 5 SELF TAP/DRILLING SCREW	FULL	1/2"
MIN. 1/8" THK 6063-T5 ALUM.	1/4" GR. 5 SELF TAP/DRILLING SCREW	FULL	1/2"
C-90 CMU	(2) 1/4" CONCRETE SCREW	1 1/4"	2 1/2"
2500 PSI CONCRETE	(2) 1/4" CONCRETE SCREW	1 3/4"	2 1/2"
POCKET PANEL SCREWS			
MIN. 2X4 WOOD FRAME OR BUCK (MIN. GR. 3 & G=0.55)	NO. 14 SMS/WOOD SCREW	1 1/2"	1/2"
MIN. 1/8" THK A36 STEEL	1/4" GR. 5 SELF TAP/DRILLING SCREW	FULL	1/2"
INSTALLATION CLIP SCREWS			
MIN. 2X_ WOOD FRAME OR BUCK (MIN. GR. 3 & G=0.55)	NO. 12 SMS OR WOOD SCREW	1 3/8"	1"
MIN. 18 GA. 33 KSI METAL STUD	NO. 12 GR. 5 SELF TAP/DRILL SCREW	FULL	1/2"
MIN. 1/8" THK A36 STEEL	NO. 12 GR. 5 SELF TAP/DRILL SCREW	FULL	1/2"
MIN. 1/8" THK 6063-T5 ALUM.	NO. 12 GR. 5 SELF TAP/DRILL SCREW	FULL	1/2"
C-90 CMU	(2) 1/4" CONCRETE SCREW	1 1/4"	2"
2500 PSI CONCRETE	(2) 1/4" CONCRETE SCREW	1 3/4"	2"
ANGLE CLIP SCREWS			
MIN. 2X_ WOOD FRAME OR BUCK (MIN. GR. 3 & G=0.55)	NO. 8 SMS OR WOOD SCREW	1 3/8"	1"
MIN. 18 GA. 33 KSI METAL STUD	NO. 8 GR. 5 SELF TAP/DRILL SCREW	FULL	1/2"
MIN. 1/8" THK A36 STEEL	NO. 8 GR. 5 SELF TAP/DRILL SCREW	FULL	1/2"
MIN. 1/8" THK 6063-T5 ALUM.	NO. 8 GR. 5 SELF TAP/DRILL SCREW	FULL	1/2"
C-90 CMU	(2) 3/16" CONCRETE SCREW	1 1/4"	2"
2500 PSI CONCRETE	(2) 3/16" CONCRETE SCREW	1 1/2"	2"

(1) SUBSTRATE DEPTH SHALL BE MINIMUM AS SHOWN IN THE DRAWING SECTIONS.
(2) CONCRETE SCREWS SHALL BE ELCO ULTRACONS (C.S.), ELCO CRETE-FLEX (S.S.), ITW RAMSET/RED HEAD TAPCONS (C.S. OR S.S.) OR HILTI KWIK-CON II (C.S OR S.S.).

GENERAL NOTES:

1. THESE DOOR SYSTEMS HAVE BEEN TESTED, ANALYZED & APPROVED FOR DESIGN PRESSURES NOT TO EXCEED THOSE SHOWN IN THE "ALLOWABLE DESIGN PRESSURE TABLE(S)".
2. OPENINGS, BUCKING & BUCKING FASTENERS MUST BE PROPERLY DESIGNED & INSTALLED TO TRANSFER WIND LOADS TO THE STRUCTURE.
3. ALL HARDWARE & FASTENERS SHALL BE IN ACCORDANCE WITH THESE DRAWINGS & SHALL NOT VARY UNLESS SPECIFICALLY MENTIONED ON THE DRAWINGS. SPECIFIED ANCHOR EMBED TO BASE MATERIAL SHALL BE BEYOND WALL FINISH OR STUCCO.
4. THE DETAILS & SPECIFICATIONS SHOWN HEREIN REPRESENT THE PRODUCTS TESTED & PROPOSED FOR WATER, AIR, IMPACT, CYCLIC & UNIFORM STATIC AIR PRESSURE TESTING IN CONFORMANCE WITH THE FLORIDA BUILDING CODE PROTOCOLS TAS-201, 202 & 203 FOR LARGE MISSILE IMPACT DOORS.
5. THESE DOOR SYSTEMS HAVE BEEN DESIGNED IN ACCORDANCE WITH AND MEET THE REQUIREMENTS OF THE FLORIDA BUILDING CODE (FBC) INCLUDING HIGH VELOCITY HURRICANE ZONES (HVHZ).
6. IMPACT SHUTTERS ARE NOT REQUIRED WITH THESE DOORS.
7. ALL ANCHORS SECURING DOOR FRAME TO PRESSURE TREATED BUCKS OR WOOD FRAMING SHALL BE CAPABLE OF RESISTING CORROSION CAUSED BY THE PRESSURE TREATING CHEMICALS IN THE WOOD.
8. DETERMINE THE POSITIVE & NEGATIVE DESIGN LOADS TO USE WHEN REFERENCING THESE DOCUMENTS IN ACCORDANCE WITH THE GOVERNING CODE AND GOVERNING WIND VELOCITY. FOR WIND LOAD CALCULATIONS IN ACCORDANCE WITH THE FLORIDA BUILDING CODE, A DIRECTIONALITY FACTOR OF KD = 0.85 MAY BE APPLIED PER THE ASCE-7 STANDARD.
9. NO INCREASE IN ALLOWABLE STRESS HAS BEEN USED IN THE CERTIFICATION OF THIS PRODUCT. WIND LOAD DURATION FACTOR CD = 1.6 WAS USED FOR WOOD SCREW ANALYSIS ONLY.
10. MATERIALS, INCLUDING BUT NOT LIMITED TO STEEL SCREWS, THAT COME INTO CONTACT WITH OTHER DISSIMILAR MATERIALS SHALL MEET THE REQUIREMENTS OF FLORIDA BUILDING CODE CHAPTER 20.
11. ALL WOOD MEMBERS OF DOORS THAT MAY POSSIBLY COME INTO CONTACT WITH MASONRY OR CONCRETE SUBSTRATES, ARE SUBJECT TO MOISTURE &/OR ARE SUBJECT TO THE OUTSIDE ENVIRONMENT SHALL BE OF AN APPROVED DURABLE SPECIES OR BE TREATED IN AN APPROVED METHOD WITH AN APPROVED PRESERVATIVE PER FBC SECTION 2326.
12. DOOR POCKETS SHALL BE CONSTRUCTED BY TISCHLER AS DETAILED IN THESE DRAWINGS. BECAUSE THE POCKETS ARE NOT IMPACT NOR WIND PRESSURE RATED, THEY SHALL BE COVERED BY AN IMPACT RESISTANT WALL STRUCTURE DESIGNED BY OTHERS.

CORNER CONSTRUCTION:

FRAME CORNERS: SQUARE CUT, BUTTED, JOINED WITH THREE(3) 5/16" X 3 15/16" LONG SOCKET MACHINE SCREWS WITH A CRESCENT NUT & GLUED WITH PONAL SUPER 3 WOOD GLUE OR EQUIVALENT.
TOP PANEL CORNERS: SQUARE CUT, BUTTED, JOINED WITH FIVE(5) ø5/16 X 2" WOOD DOWELS, & GLUED WITH PONAL SUPER 3 WOOD GLUE OR EQUIVALENT.
BOTTOM PANEL CORNERS: SQUARE CUT, BUTTED, JOINED WITH SEVEN(7) ø5/16 X 2" WOOD DOWELS, & GLUED WITH PONAL SUPER 3 WOOD GLUE OR EQUIVALENT.

LOCKING BOLT QUANTITY REQUIREMENTS	
(1) PANEL HEIGHT	QUANTITY PER PANEL
OVER 114 1/8"	5
114 1/8" & LESS	4
(1) PANEL HEIGHT IS FRAME HEIGHT MINUS 5 7/8".	

INTERLOCK PLATE QUANTITY REQUIREMENTS
3 PER PANEL

POCKET INTERLOCK PLATE QUANTITY REQUIREMENTS	
(1) PANEL HEIGHT	QUANTITY PER PANEL
OVER 107 3/8"	4
107 3/8" & LESS	3
(1) PANEL HEIGHT IS FRAME HEIGHT MINUS 5 7/8".	

ALLOWABLE DESIGN PRESSURE

(1) (2) MAX. PANEL HEIGHT (IN.)	(3) MAX. PANEL WIDTH (IN.)	MAX. VERTICAL D.L.O. (IN.)	MAX. HORIZONTAL D.L.O. (IN.)	ALLOWABLE PRESSURE (+/- PSF)
134 1/8	64 1/16	123 3/4	55 9/16	70
123 5/8	69 1/2	113 1/4	61	70
114 1/8	74 15/16	103 3/4	66 7/16	70

(1) PANEL WIDTH IS CONSIDERED AS THE DISTANCE BETWEEN EACH STILE PERIMETER & DOES NOT INCLUDE ANY ATTACHED POCKET FILLER OR BUMPER PARTS.
(2) WITH SINGLE PANEL DEEP DOORS (PX & PXXP), PANEL WIDTH STATED IN THIS TABLE SHALL BE INCREASED 1".
(3) PANEL HEIGHT IS FRAME HEIGHT MINUS 5 7/8".

Approved as complying with the Florida Building Code
Date 08/13/2012
NOA# 12-0516.08
Miami Dade Product Control
By

PRODUCT REVISED
as complying with the Florida Building Code
Acceptance No. 14-0428.14
Expiration Date 04/13/2017
By
Miami Dade Product Control

WARREN W. SCHAEFER LICENSE No. 44135 STATE OF FLORIDA PROFESSIONAL ENGINEER

THESE DRAWINGS ARE APPLICABLE ONLY TO THE PRODUCT SPECIFIED. THEY MAY NOT BE USED FOR THE ASSEMBLY AND/OR INSTALLATION OF ANY OTHER PRODUCT NOR MAY THEY BE USED FOR RATIONAL AND/OR LOCAL APPROVAL OF ANY PRODUCT NOT PRODUCED BY THE MANUFACTURER STATED ON THESE DRAWINGS.

DETAILED ELEVATIONS SHOWN ON SHEETS 2 THROUGH 11 ARE ONLY THOSE NECESSARY TO SHOW ALL APPLICABLE DOOR SECTIONS & ANCHOR CONDITIONS. FOR ALL ELEVATION CONFIGURATIONS APPLICABLE TO THIS APPROVAL, SEE SHEET 12.

DRAWN BY: W.R.M.	CHECKED BY: W.W.S.
PLOT: 1=24	DATE: 03/29/12

NO.	REVISION DESCRIPTION	BY	DATE

DRAWING TITLE
WOOD IMPACT LIFT & SLIDE DOOR

MANUFACTURER
TISCHLER UND SOHN (USA) LTD.
SIX SUBURBAN AVENUE
STAMFORD, CONNECTICUT 06901
203-674-0600

CONSULTANTS
W. W. SCHAEFER ENGINEERING & CONSULTING, P.A. (CA 6809)
7480 150TH COURT NORTH
PALM BEACH GARDENS, FL 33418
PHONE: 561-744-3424

CERTIFICATION
AUG 21 2012
WARREN W. SCHAEFER, P.E.
P.E. NO. 44135

DRAWING NO. 1755 REV.
SHEET NO. 1 OF 32

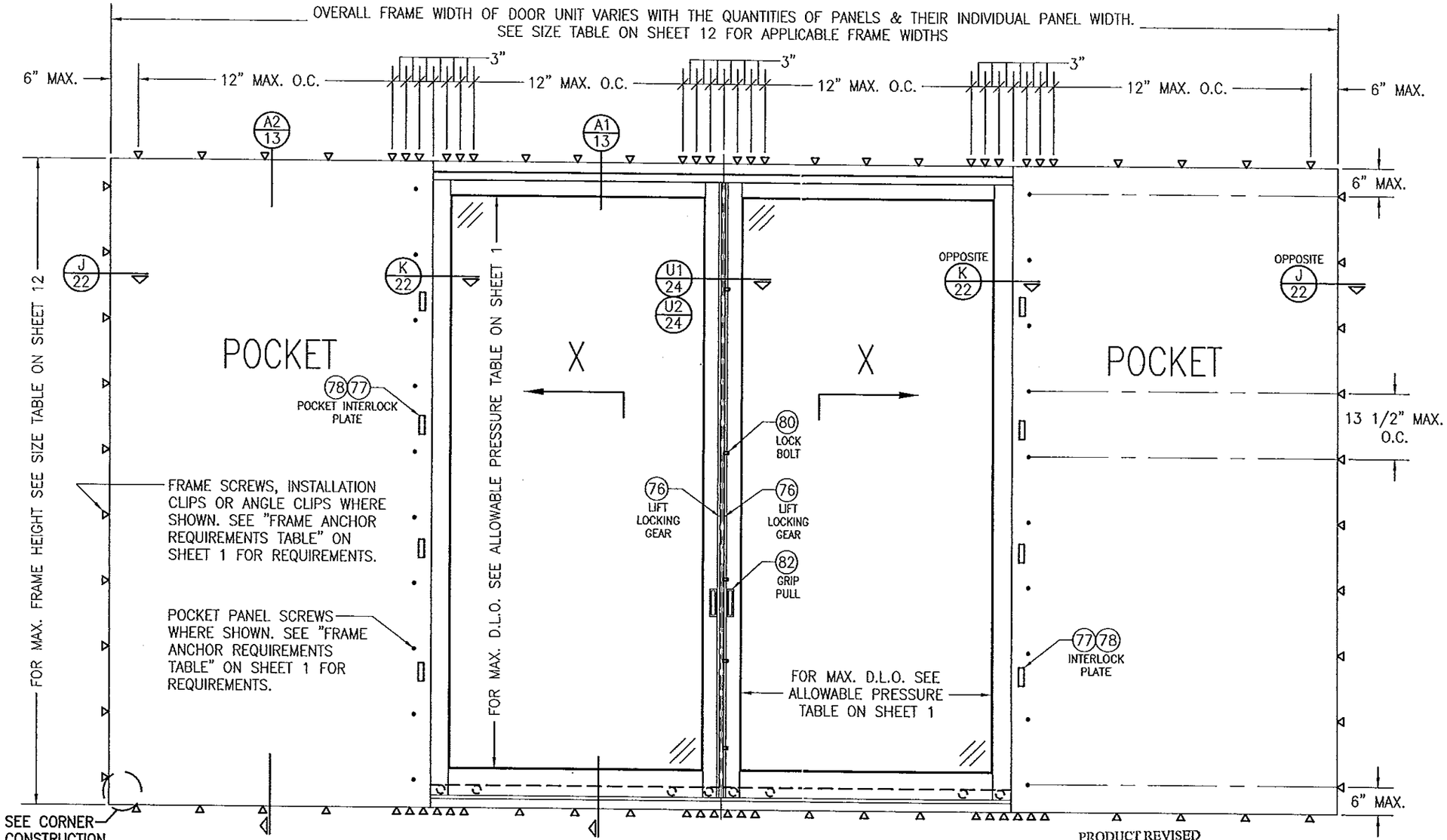

EXTERIOR ELEVATION:
SINGLE PANEL DEEP CONDITION
SCALE: 1/2" = 1'-0"

PRODUCT REVISED
as complying with the Florida
Building Code
Acceptance No 14-0428.14
Expiration Date 09/13/2017
By
Miami Dade Product Control

Approved as complying with the
Florida Building Code
Date 09/13/2012
NOA# 12-0516.08
Miami Dade Product Control
By

WARREN W. SCHAEFER LICENSE No. 44135 STATE OF FLORIDA PROFESSIONAL ENGINEER

DRAWN BY: W.R.M.	CHECKED BY: W.W.S.
PLOT: 1=24	DATE: 03/29/12

NO.	REVISION DESCRIPTION	BY	DATE

DRAWING TITLE
WOOD IMPACT LIFT & SLIDE DOOR

MANUFACTURER
TISCHLER UND SOHN (USA) LTD.
SIX SUBURBAN AVENUE
STAMFORD, CONNECTICUT 06901
203-674-0600

CONSULTANTS
W. W. SCHAEFER ENGINEERING & CONSULTING, P.A. (CA 6809)
7480 150TH COURT NORTH
PALM BEACH GARDENS, FL 33418
PHONE: 561-744-3424

CERTIFICATION
AUG 21 2012
WARREN W. SCHAEFER, P.E.
P.E. NO. 44135

DRAWING NO. 1755
REV.

SHEET NO. 2 OF 32

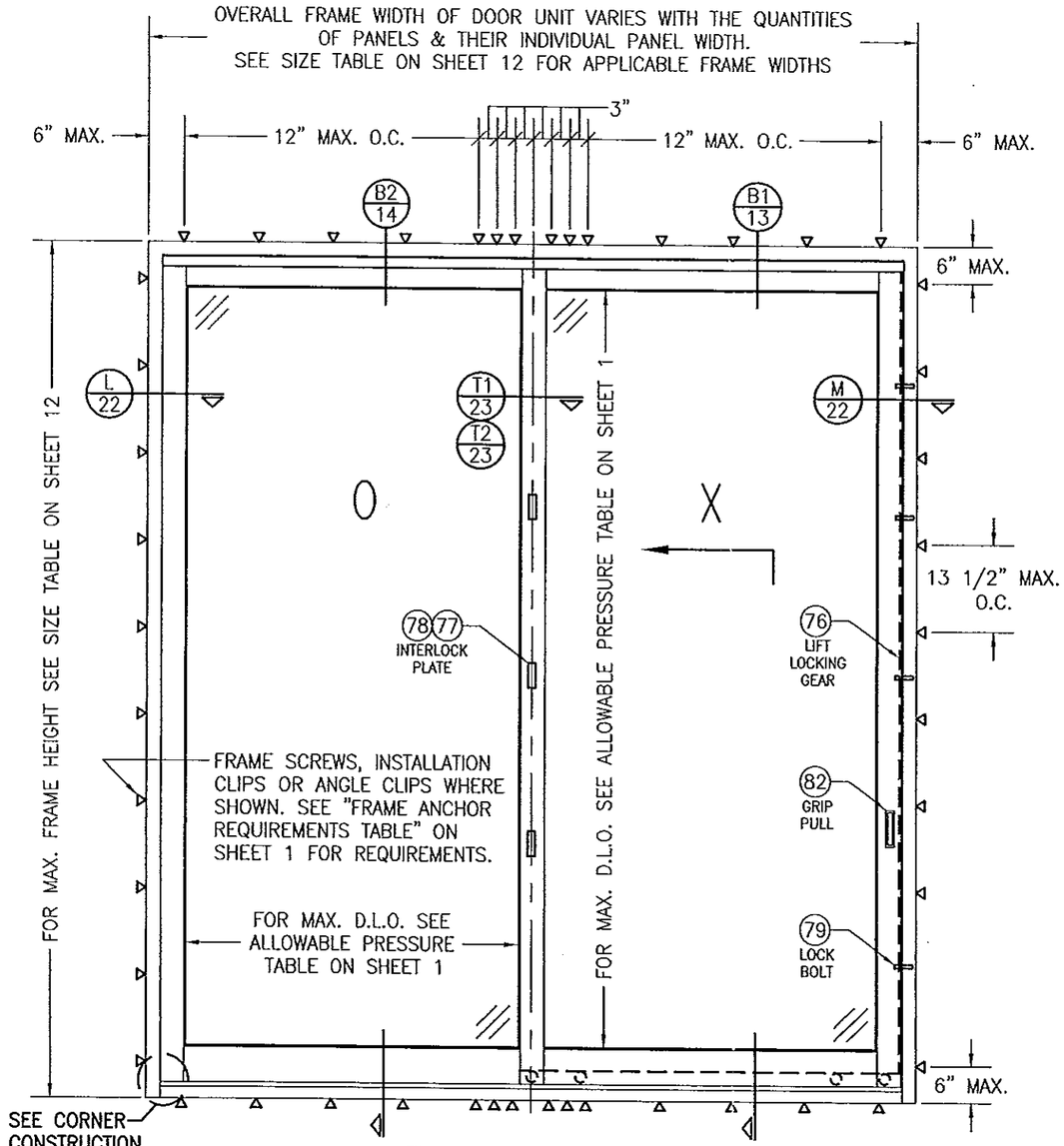

EXTERIOR ELEVATION:
2 PANEL DEEP OX CONDITION
SCALE: 1/2" = 1'-0"

PRODUCT REVISED
as complying with the Florida
Building Code
Acceptance No 14-0428.14
Expiration Date 09/13/2017
By
Miami Dade Product Control

Approved as complying with the
Florida Building Code
Date 09/13/2012
NOA# 12-0516.08
Miami Dade Product Control
By

WARREN W. SCHAEFER LICENSE No. 44135 STATE OF FLORIDA PROFESSIONAL ENGINEER

DRAWN BY: W.R.M.	CHECKED BY: W.W.S.
PLOT: 1=24	DATE: 03/29/12

NO.	REVISION DESCRIPTION	BY	DATE

DRAWING TITLE
WOOD IMPACT LIFT & SLIDE DOOR

MANUFACTURER
TISCHLER UND SOHN (USA) LTD.
SIX SUBURBAN AVENUE
STAMFORD, CONNECTICUT 06901
203-674-0600

CONSULTANTS
W. W. SCHAEFER ENGINEERING & CONSULTING, P.A. (CA 6809)
7480 150TH COURT NORTH
PALM BEACH GARDENS, FL 33418
PHONE: 561-744-3424

CERTIFICATION
AUG 21 2012
WARREN W. SCHAEFER, P.E.
P.E. NO. 44135

DRAWING NO. 1755
REV.
SHEET NO. 3 OF 32

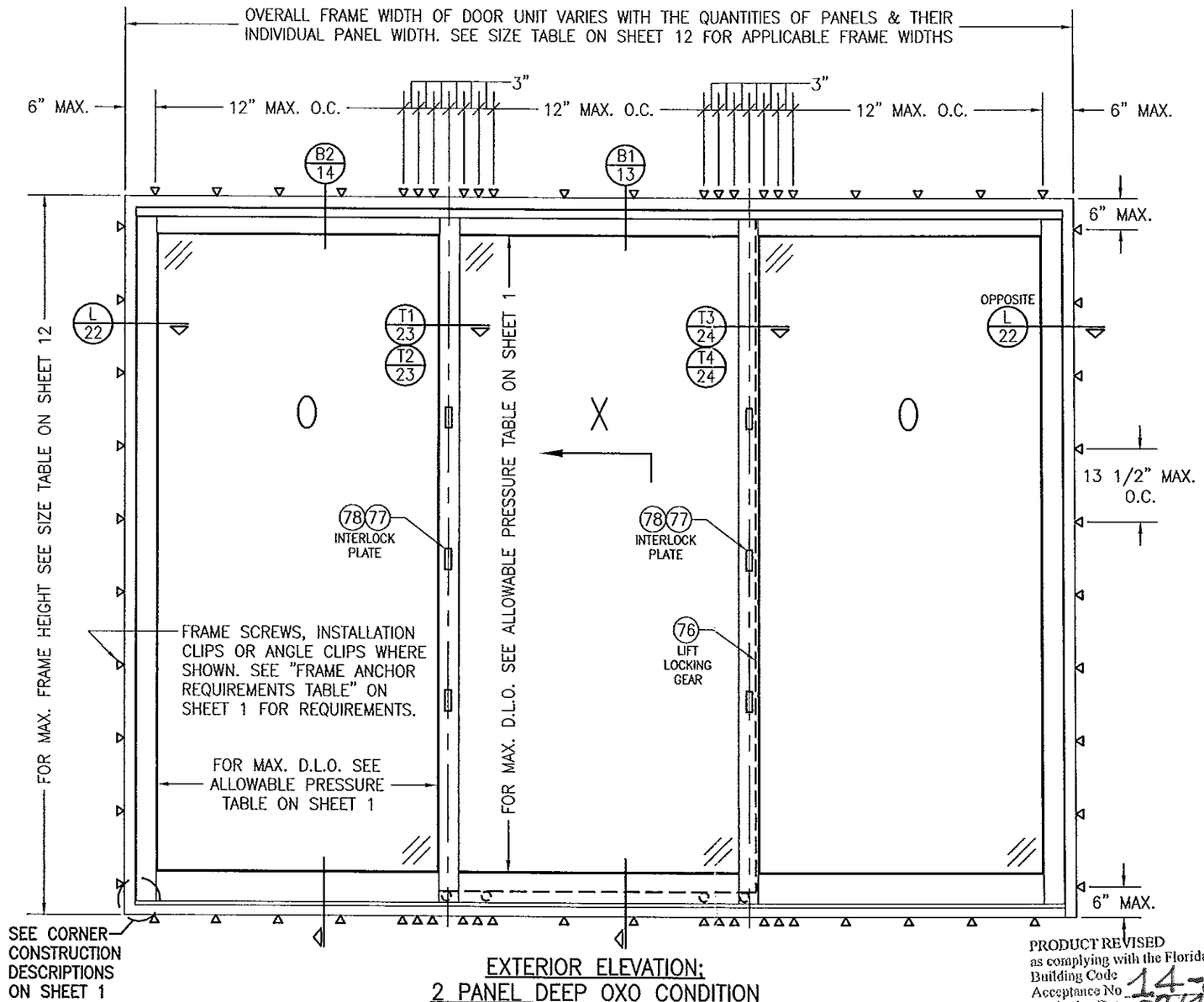

EXTERIOR ELEVATION:
2 PANEL DEEP OXO CONDITION
SCALE: 1/2" = 1'-0"

PRODUCT REVISED
as complying with the Florida
Building Code
Acceptance No 14-0428.14
Expiration Date 09/13/2017

By _____
Miami Dade Product Control

Approved as complying with the
Florida Building Code
Date 09/13/2012
NOA# 12-0516.08
Miami Dade Product Control
By _____

WARREN W. SCHAEFER LICENSE No. 44135 STATE OF FLORIDA PROFESSIONAL ENGINEER

NO.	REVISION DESCRIPTION	BY	DATE

DRAWN BY: W.R.W.
CHECKED BY: W.W.S.
PLOT: 1=24
DATE: 03/29/12

DRAWING TITLE
WOOD IMPACT LIFT & SLIDE DOOR

MANUFACTURER
TISCHLER UND SOHN (USA) LTD.
SIX SUBURBAN AVENUE
STAMFORD, CONNECTICUT 06901
203-674-0600

CONSULTANTS
W. W. SCHAEFER ENGINEERING & CONSULTING, P.A. (CA 6809)
7480 150TH COURT NORTH
PALM BEACH GARDENS, FL 33418
PHONE: 561-744-3424

CERTIFICATION
AUG 21 2012
WARREN W. SCHAEFER, P.E.
P.E. NO. 44135

DRAWING NO. 1755
REV.
SHEET NO. 4 OF 32

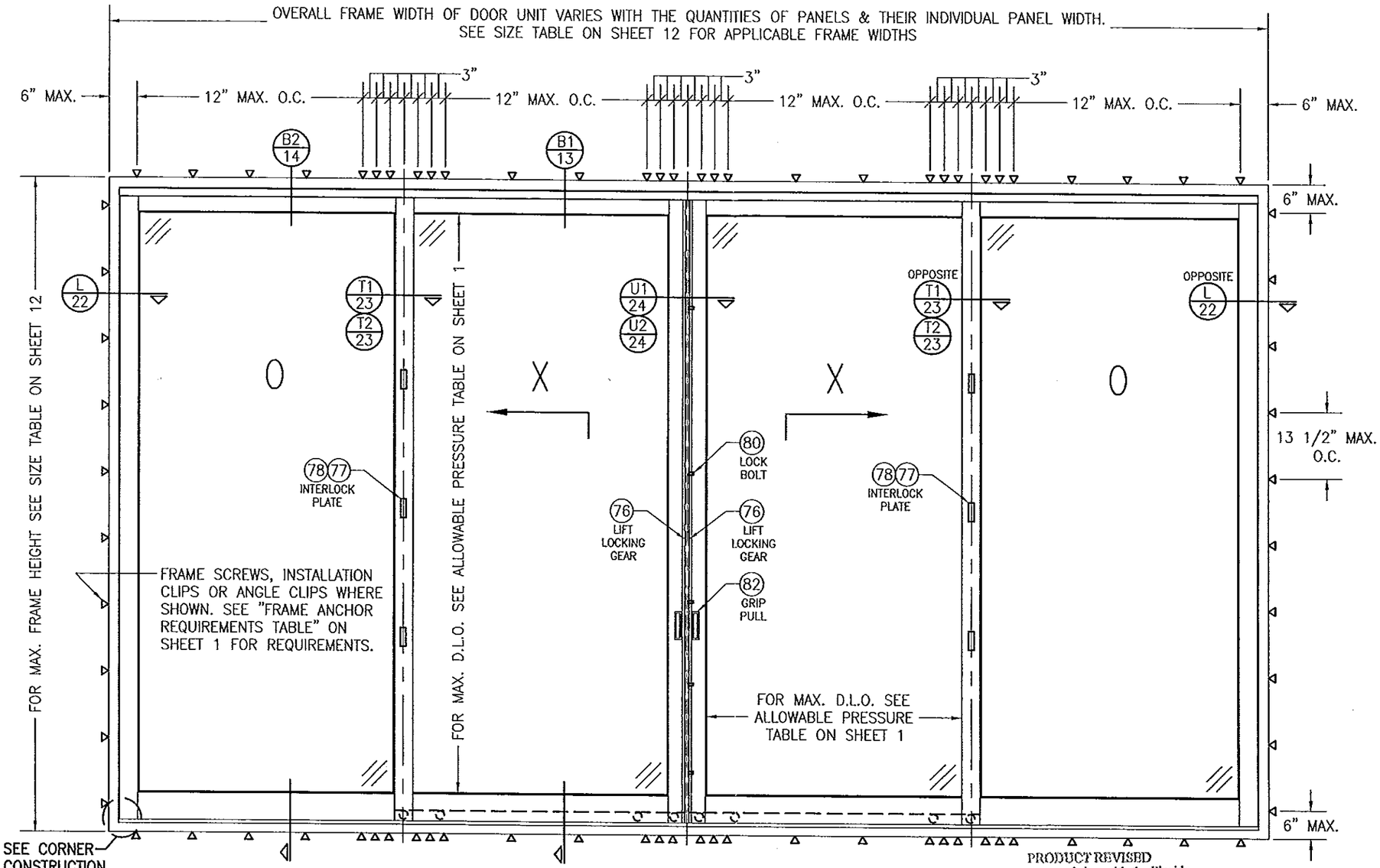

EXTERIOR ELEVATION:
2 PANEL DEEP OXXO CONDITION
SCALE: 1/2" = 1'-0"

PRODUCT REVISED
as complying with the Florida
Building Code
Acceptance No 14-0428.14
Expiration Date 09/13/2017
By
Miami Dade Product Control

Approved as complying with the
Florida Building Code
Date 09/13/2012
NOA# 12-0516.08
Miami Dade Product Control
By

WARREN W. SCHAEFER LICENSE NO. 44135 STATE OF FLORIDA PROFESSIONAL ENGINEER

DRAWN BY: W.R.M.	CHECKED BY: W.W.S.
PLOT: 1=24	DATE: 03/29/12

NO.	REVISION DESCRIPTION	BY	DATE

DRAWING TITLE
WOOD IMPACT LIFT & SLIDE DOOR

MANUFACTURER
TISCHLER UND SOHN (USA) LTD.
SIX SUBURBAN AVENUE
STAMFORD, CONNECTICUT 06901
203-674-0600

CONSULTANTS
W. W. SCHAEFER ENGINEERING & CONSULTING, P.A. (CA 6809)
7480 150TH COURT NORTH
PALM BEACH GARDENS, FL 33418
PHONE: 561-744-3424

CERTIFICATION
AUG 21 2012
WARREN W. SCHAEFER, P.E.
P.E. NO. 44135

DRAWING NO. 1755
REV.
SHEET NO. 5 OF 32

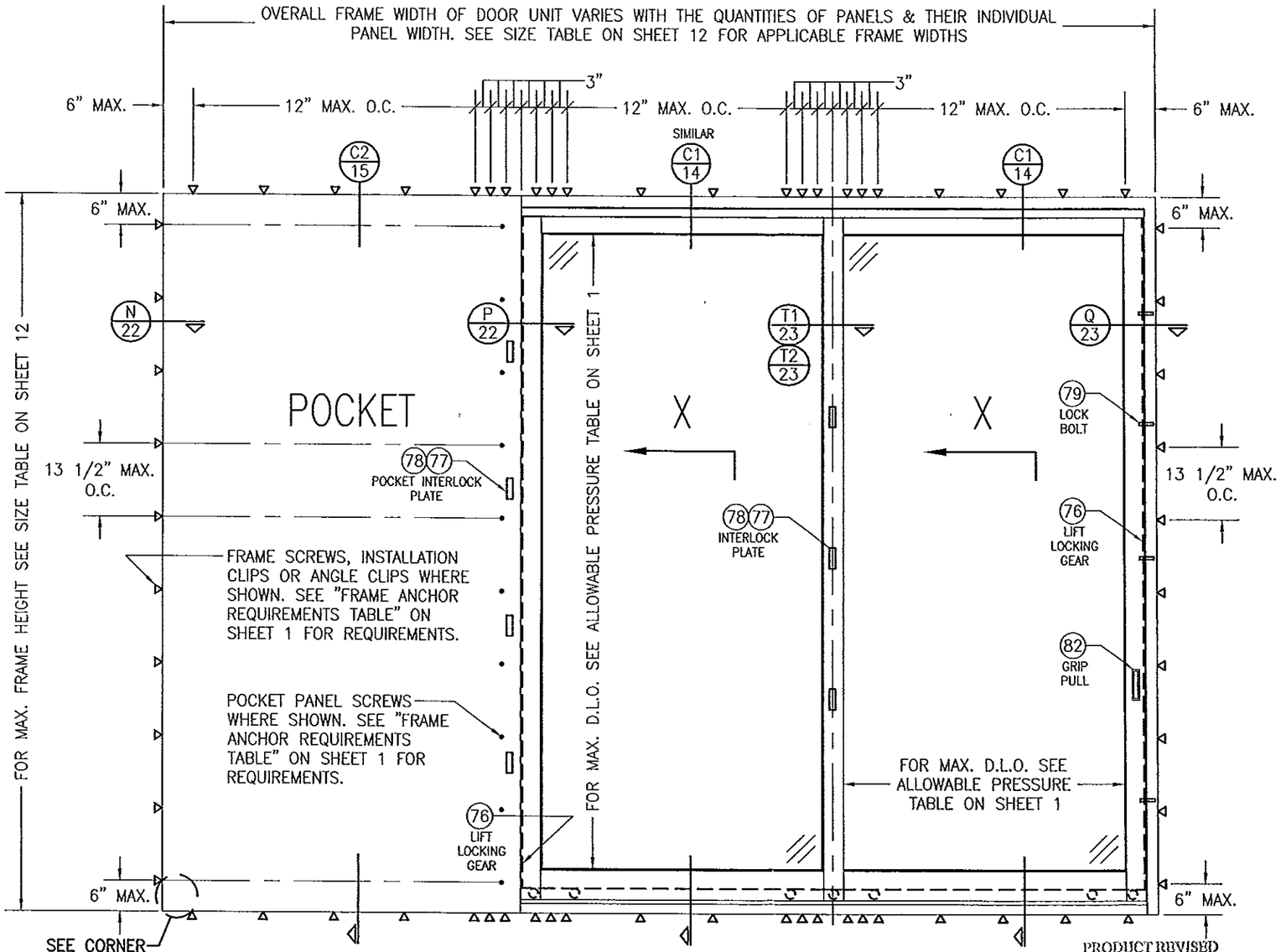

EXTERIOR ELEVATION;
2 PANEL DEEP WITH POCKET CONDITION
SCALE: 1/2" = 1'-0"

PRODUCT REVISED
as complying with the Florida
Building Code
Acceptance No 14-0428.14
Expiration Date 09/13/2017

By _____
Miami Dade Product Control

Approved as complying with the
Florida Building Code
Date 09/13/2012
NOA# 12-0516.08
Miami Dade Product Control

By _____

WARREN W. SCHAEFER LICENSE No. 44135 STATE OF FLORIDA PROFESSIONAL ENGINEER

DRAWN BY: W.R.M.	CHECKED BY: W.W.S.
PLOT: 1=24	DATE: 03/29/12

NO.	REVISION DESCRIPTION	BY	DATE

DRAWING TITLE
WOOD IMPACT LIFT & SLIDE DOOR

MANUFACTURER
TISCHLER UND SOHN (USA) LTD.
SIX SUBURBAN AVENUE
STAMFORD, CONNECTICUT 06901
203-674-0600

CONSULTANTS
W. W. SCHAEFER ENGINEERING & CONSULTING, P.A. (CA 6809)
7480 150TH COURT NORTH
PALM BEACH GARDENS, FL 33418
PHONE: 561-744-3424

CERTIFICATION
AUG 21 2012
WARREN W. SCHAEFER, P.E.
P.E. NO. 44135

DRAWING NO. 1755
REV.
SHEET NO. 6 OF 32

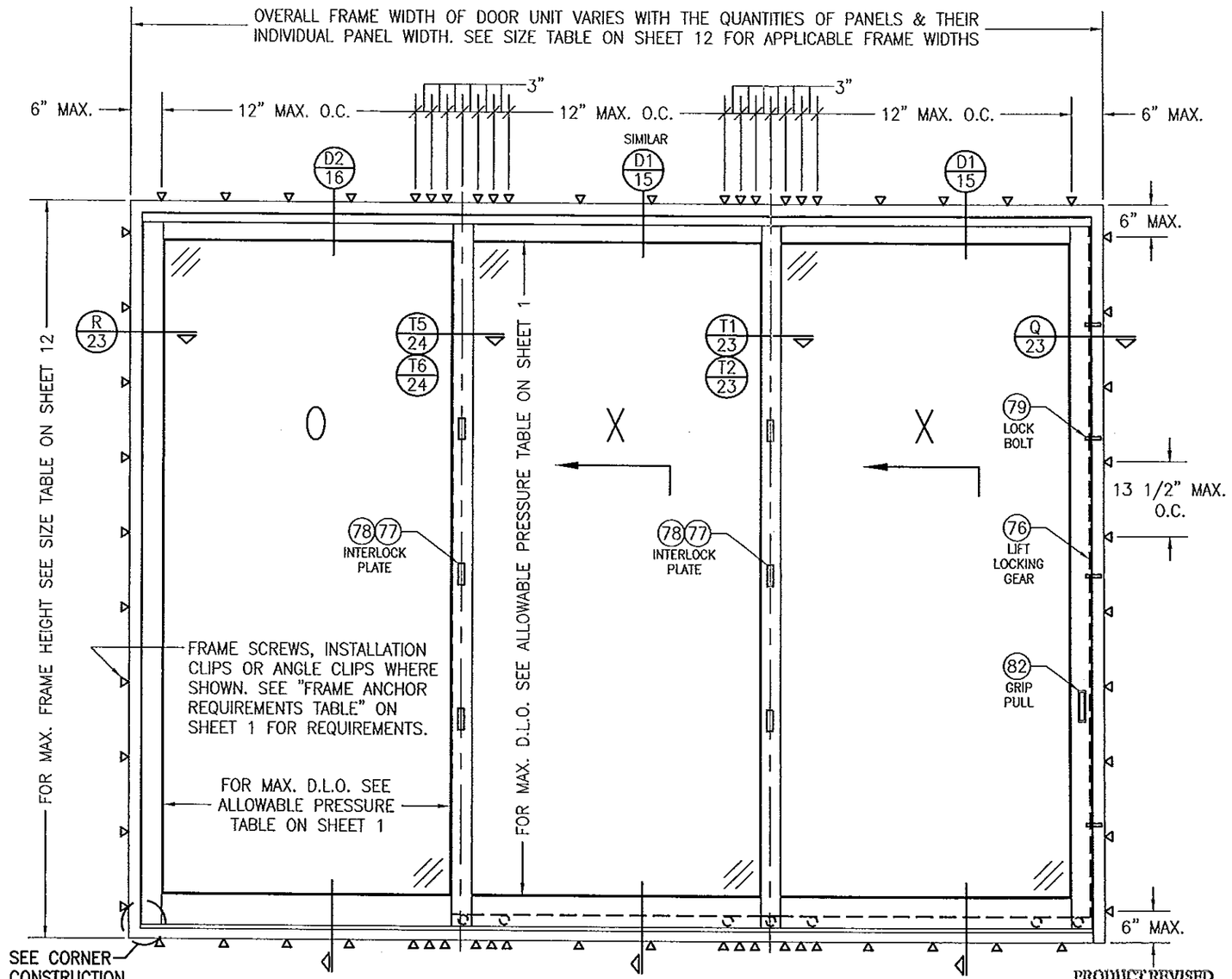

EXTERIOR ELEVATION:
3 PANEL DEEP OXX CONDITION
SCALE: 1/2" = 1'-0"

PRODUCT REVISED
as complying with the Florida Building Code
Acceptance No. 14-0428.14
Expiration Date 04/13/2017
By
Miami Dade Product Control

Approved as complying with the Florida Building Code
Date 09/13/2012
NOA# 12-0516.08
Miami Dade Product Control
By

WARREN W. SCHAEFER LICENSE No. 44135 STATE OF FLORIDA PROFESSIONAL ENGINEER

NO.	REVISION DESCRIPTION	BY	DATE

DRAWN BY: W.R.W.
CHECKED BY: W.W.S.
PLOT: 1-24
DATE: 03/29/12

DRAWING TITLE
WOOD IMPACT LIFT & SLIDE DOOR

MANUFACTURER
TISCHLER UND SOHN (USA) LTD.
SIX SUBURBAN AVENUE
STAMFORD, CONNECTICUT 06901
203-674-0600

CONSULTANTS
W. W. SCHAEFER ENGINEERING & CONSULTING, P.A. (CA 6809)
7480 150TH COURT NORTH
PALM BEACH GARDENS, FL 33418
PHONE: 561-744-3424

CERTIFICATION
AUG 21 2012
WARREN W. SCHAEFER, P.E.
P.E. NO. 44135

DRAWING NO. 1755
REV.
SHEET NO. 7 OF 32

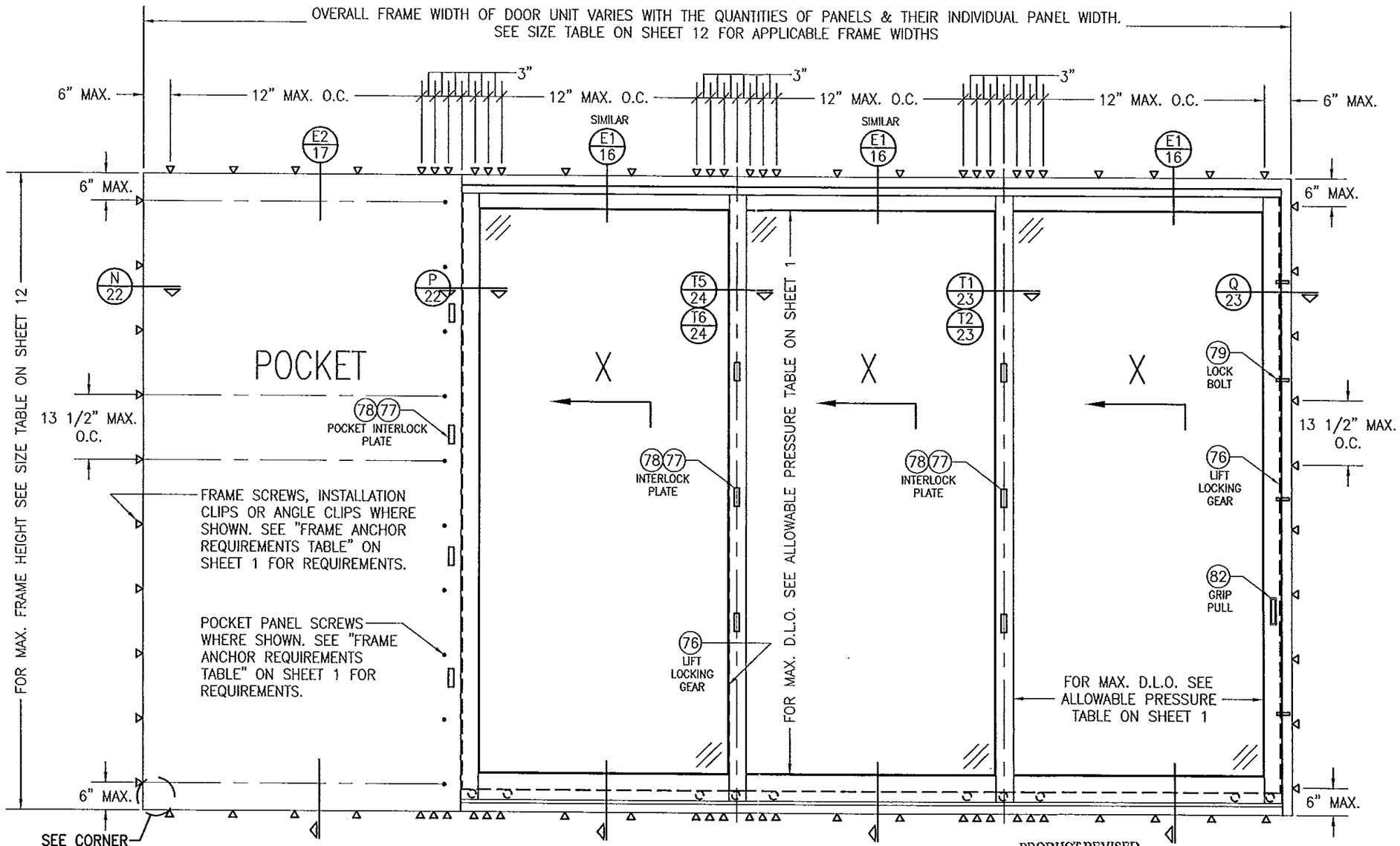

EXTERIOR ELEVATION:
3 PANEL DEEP WITH POCKET CONDITION
SCALE: 1/2" = 1'-0"

PRODUCT REVISED
as complying with the Florida
Building Code
Acceptance No 14-0428.14
Expiration Date 09/13/2017
By
Miami Dade Product Control

Approved as complying with the
Florida Building Code
Date 09/13/2012
NOA# 12-0516.08
Miami Dade Product Control
By

WARREN W. SCHAEFER LICENSE No. 44135 STATE OF FLORIDA PROFESSIONAL ENGINEER

DRAWN BY: W.R.M.	CHECKED BY: W.W.S.
PLOT: 1=24	DATE: 03/29/12

NO.	REVISION DESCRIPTION	BY	DATE

DRAWING TITLE
WOOD IMPACT LIFT & SLIDE DOOR

MANUFACTURER
TISCHLER UND SOHN (USA) LTD.
SIX SUBURBAN AVENUE
STAMFORD, CONNECTICUT 06901
203-674-0600

CONSULTANTS
W. W. SCHAEFER ENGINEERING & CONSULTING, P.A. (CA 6809)
7480 150TH COURT NORTH
PALM BEACH GARDENS, FL 33418
PHONE: 561-744-3424

CERTIFICATION
AUG 21 2012
WARREN W. SCHAEFER, P.E.
P.E. NO. 44135

DRAWING NO. 1755
REV.
SHEET NO. 8 OF 32

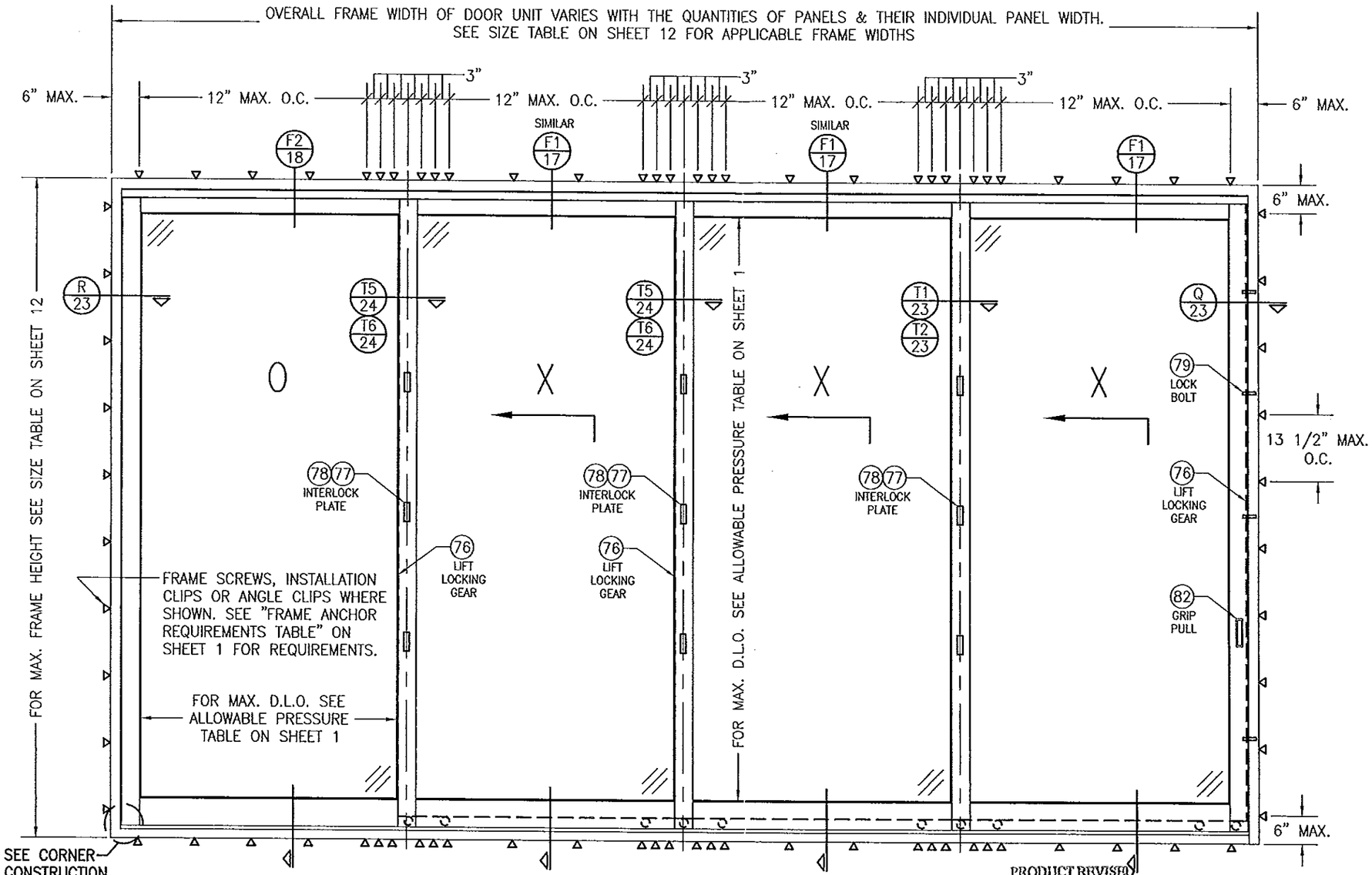

EXTERIOR ELEVATION:
4 PANEL DEEP OXXX CONDITION
SCALE: 1/2" = 1'-0"

PRODUCT REVISED
as complying with the Florida
Building Code
Acceptance No 14-0428.14
Expiration Date 09/13/2017
By
Miami Dade Product Control

Approved as complying with the
Florida Building Code
Date 09/13/2012
NOA# 12-0516.08
Miami Dade Product Control
By

WARREN W. SCHAEFER LICENSE No. 44135 STATE OF FLORIDA PROFESSIONAL ENGINEER

DRAWN BY: W.R.M.	CHECKED BY: W.W.S.
PLOT: 1=24	DATE: 03/29/12

NO.	REVISION DESCRIPTION	BY	DATE

DRAWING TITLE
WOOD IMPACT LIFT & SLIDE DOOR

MANUFACTURER
TISCHLER UND SOHN (USA) LTD.
SIX SUBURBAN AVENUE
STAMFORD, CONNECTICUT 06901
203-674-0600

CONSULTANTS
W. W. SCHAEFER ENGINEERING & CONSULTING, P.A. (CA 6809)
7480 150TH COURT NORTH
PALM BEACH GARDENS, FL 33418
PHONE: 561-744-3424

CERTIFICATION
AUG 21 2012
WARREN W. SCHAEFER, P.E.
P.E. NO. 44135

DRAWING NO. 1755
REV.

SHEET NO. 9 OF 32

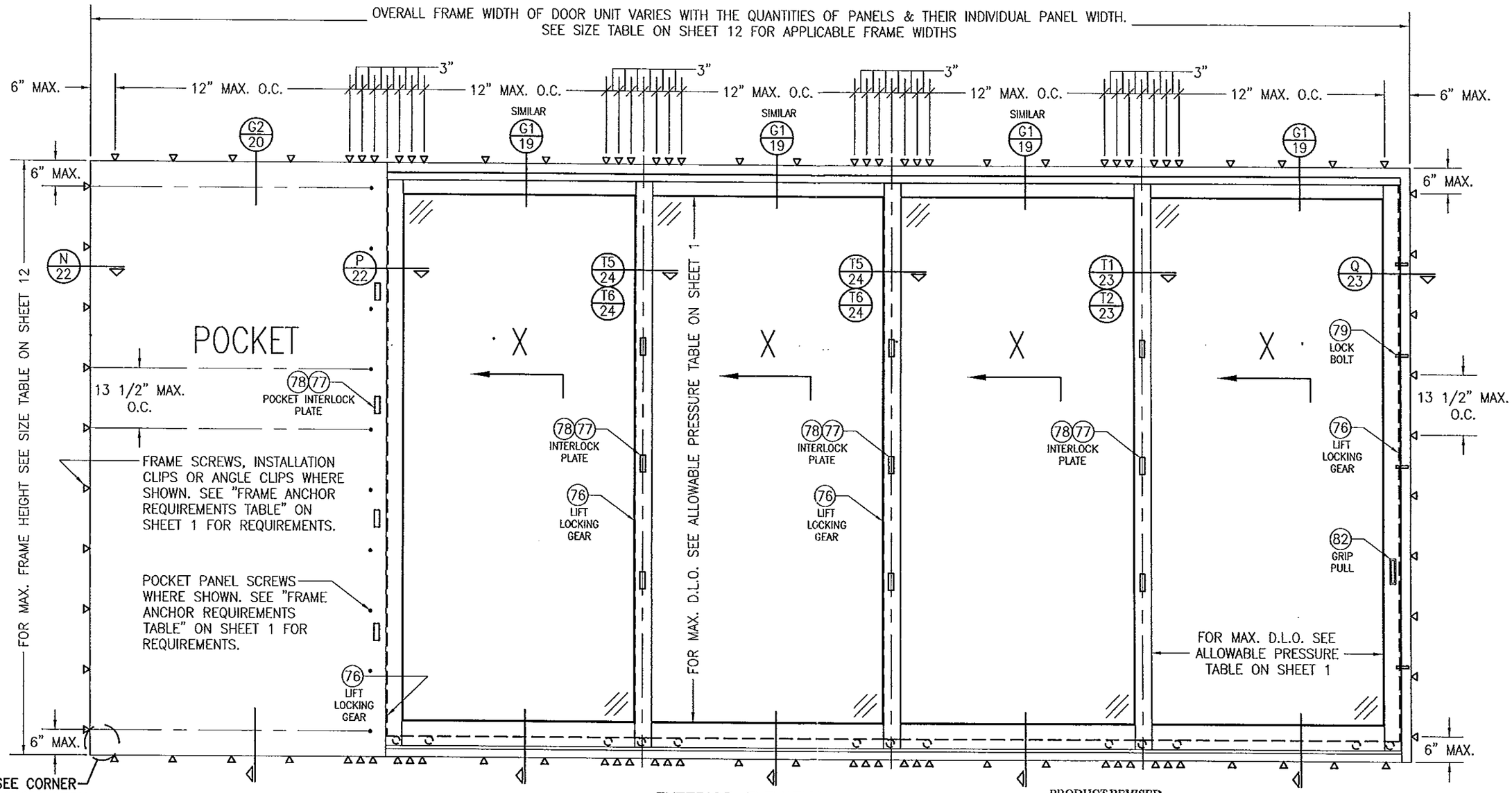

EXTERIOR ELEVATION:
4 PANEL DEEP WITH POCKET CONDITION
SCALE: 1/2" = 1'-0"

PRODUCT REVISED
as complying with the Florida
Building Code
Acceptance No 14-0428.14
Expiration Date 09/13/2017
By
Miami Dade Product Control

Approved as complying with the
Florida Building Code
Date 09/13/2012
NOA# 12-0516.08
Miami-Dade Product Control
By

WARREN W. SCHAEFER LICENSE No. 44135 STATE OF FLORIDA PROFESSIONAL ENGINEER

DRAWN BY: W.R.M.	CHECKED BY: W.W.S.
PLOT: 1=24	DATE: 03/29/12

NO.	REVISION DESCRIPTION	BY	DATE

DRAWING TITLE
WOOD IMPACT LIFT & SLIDE DOOR

MANUFACTURER
TISCHLER UND SOHN (USA) LTD.
SIX SUBURBAN AVENUE
STAMFORD, CONNECTICUT 06901
203-674-0600

CONSULTANTS
W. W. SCHAEFER ENGINEERING & CONSULTING, P.A. (CA 6809)
7480 150TH COURT NORTH
PALM BEACH GARDENS, FL 33418
PHONE: 561-744-3424

CERTIFICATION
AUG 21 2012
WARREN W. SCHAEFER, P.E.
P.E. NO. 44135

DRAWING NO. 1755
REV.
SHEET NO. 10 OF 32

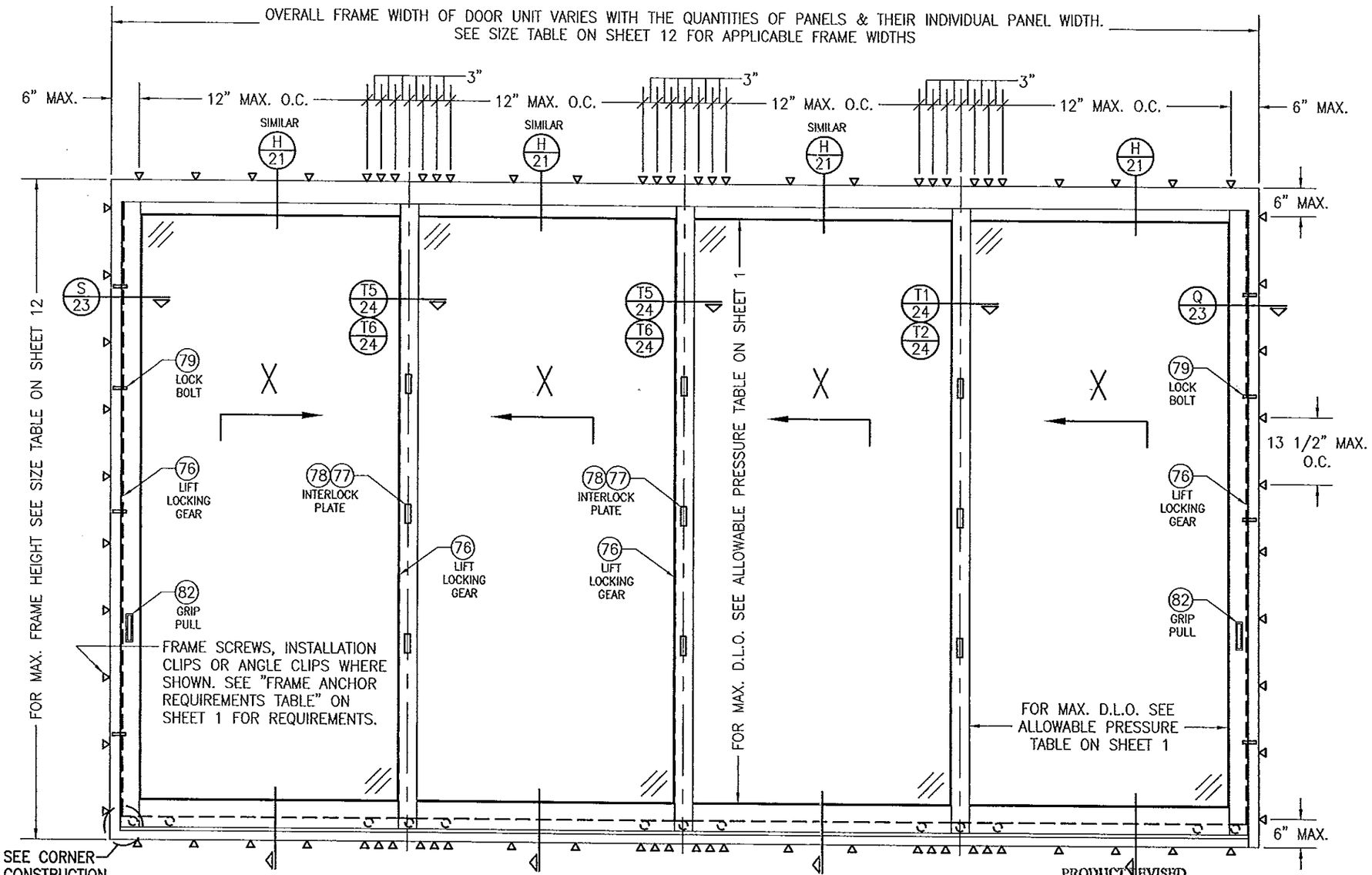

EXTERIOR ELEVATION;
4 PANEL DEEP XXXX BI-PASS CONDITION
SCALE: 1/2" = 1'-0"

PRODUCT REVISED
as complying with the Florida
Building Code
Acceptance No 14-0428.14
Expiration Date 09/13/2017
By
Miami Dade Product Control

Approved as complying with the
Florida Building Code
Date 09/13/2012
NOA# 12-0516.08
Miami Dade Product Control
By

WARREN W. SCHAEFER LICENSE No. 44135 STATE OF FLORIDA PROFESSIONAL ENGINEER

DRAWN BY: W.R.M.	CHECKED BY: W.W.S.
PLOT: 1=24	DATE: 03/29/12

NO.	REVISION DESCRIPTION	BY	DATE

DRAWING TITLE
WOOD IMPACT LIFT & SLIDE DOOR

MANUFACTURER
TISCHLER UND SOHN (USA) LTD.
SIX SUBURBAN AVENUE
STAMFORD, CONNECTICUT 06901
203-674-0600

CONSULTANTS
W. W. SCHAEFER ENGINEERING & CONSULTING, P.A. (CA 6809)
7480 150TH COURT NORTH
PALM BEACH GARDENS, FL 33418
PHONE: 561-744-3424

CERTIFICATION
AUG 21 2012
WARREN W. SCHAEFER, P.E.
P.E. NO. 44135

DRAWING NO. 1755
REV.

SHEET NO. 11 OF 32

APPROVED CONFIGURATIONS

CONFIGURATIONS WITHOUT POCKETS

2-PANEL DEEP CONDITIONS

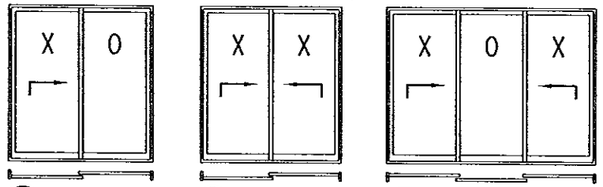

(1) XO CONDITION (2) XX CONDITION (3) OXO CONDITION

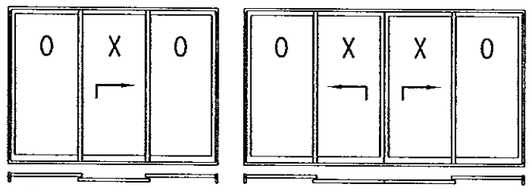

(9) OXO CONDITION (10) OXXO CONDITION

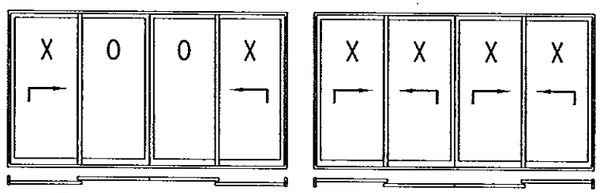

(14) XOOX CONDITION (15) XXXX CONDITION

3-PANEL DEEP CONDITIONS

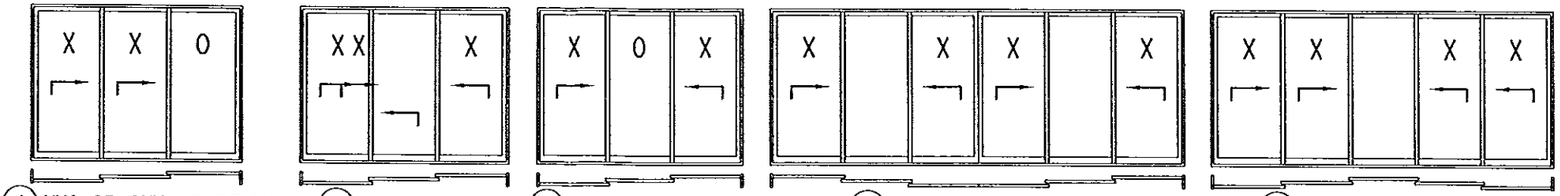

(4) XXO OR OXX CONDITION (5) XXX CONDITION (6) XOX CONDITION (7) XOXXOX CONDITION (8) XXOXX CONDITION

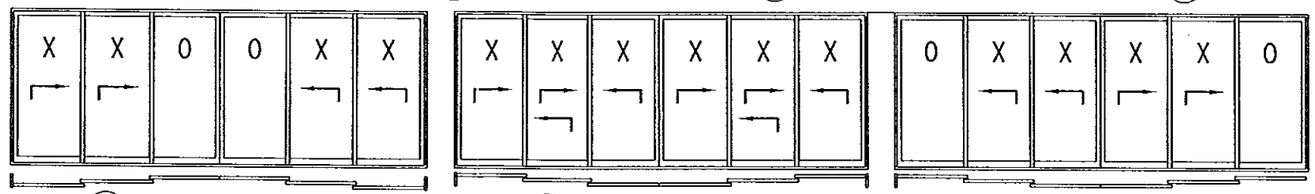

(11) XXOOXX CONDITION (12) XXXXXX CONDITION (13) OXXXXO CONDITION

4-PANEL DEEP CONDITIONS

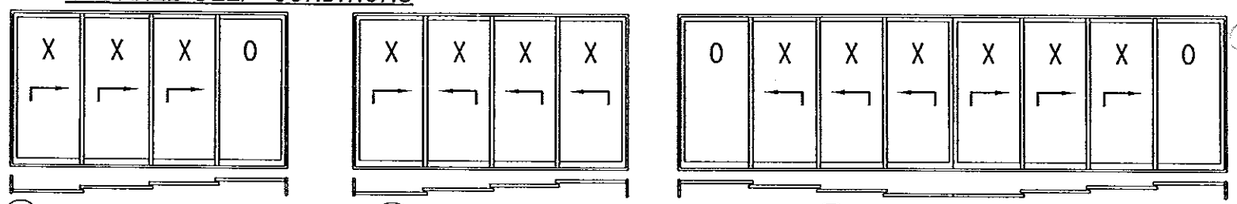

(16) XXXO OR OXXX CONDITION (17) XXXX CONDITION (18) OXXXXXXO CONDITION

PRODUCT REVISED
as complying with the Florida
Building Code
Acceptance No 14-0428.14
Expiration Date 09/13/2017
By
Miami Dade Product Control

Approved as complying with the
Florida Building Code
Date 08/13/2012
NOA# 12-0516.03
Miami Dade Product Control
By

CONFIGURATIONS WITH POCKETS

1-PANEL DEEP CONDITIONS

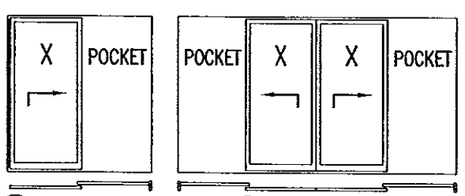

(19) X CONDITION (20) XX CONDITION

3-PANEL DEEP CONDITIONS

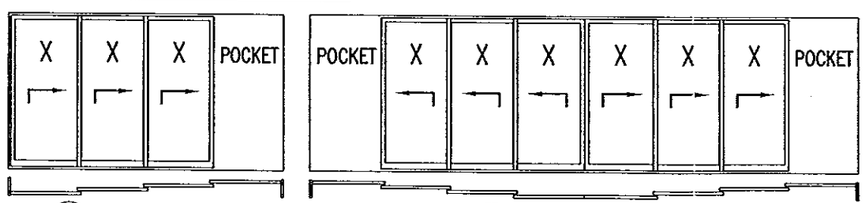

(21) XXX CONDITION (22) XXXXXX CONDITION

2-PANEL DEEP CONDITIONS

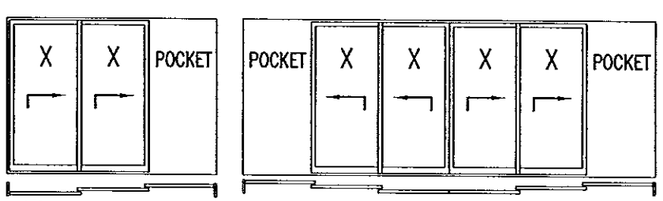

(23) XX CONDITION (24) XXXX CONDITION

4-PANEL DEEP CONDITIONS

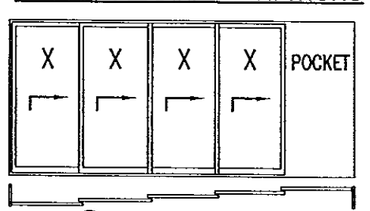

(25) XXXX CONDITION

CONDITIONS SHOWN ARE THE MAJORITY OF THOSE USED. OTHER CONDITIONS OF "O" & "X" PANELS APPLY PROVIDING THEY ARE WITHIN THE SCOPE OF THE DETAILS WITHIN THIS DRAWING

ALLOWABLE DOOR SIZE

ELEVATION NUMBER	MAX. FRAME HEIGHT (IN.)	MAX. FRAME WIDTH (IN.)	ELEVATION NUMBER	MAX. FRAME HEIGHT (IN.)	MAX. FRAME WIDTH (IN.)
1 & 2	120	150 1/2	19	120	149
	129 1/2	139 5/8		129 1/2	143 1/2
	140	128 3/4		140	138
3, 4, 5, 6 & 9	120	221 3/16	20	120	293
	129 1/2	204 7/8		129 1/2	282
	140	188 1/2		140	271 1/4
7, 11, 12 & 13	120	437 3/4	21	120	290 1/4
	129 1/2	405		129 1/2	273 7/8
	140	372		140	257 1/2
8	120	362 5/8	22	120	576
	129 1/2	335 1/4		129 1/2	543
	140	308		140	510 1/2
10, 14 & 15	120	296 3/8	23	120	219 1/2
	129 1/2	274 9/16		129 1/2	208 5/8
	140	252 3/4		140	197 3/4
16 & 17	120	291 7/8	24	120	434 1/2
	129 1/2	270		129 1/2	412 13/16
	140	248 1/4		140	391
18	120	579 1/4	25	120	361
	129 1/2	535 5/8		129 1/2	339
	140	492		140	317 3/8

WARREN W. SCHAEFER LICENSE No. 44135 STATE OF FLORIDA PROFESSIONAL ENGINEER

DRAWN BY: W.R.U.	CHECKED BY: W.W.S.
PLOT: 1=24	DATE: 03/29/12

NO.	REVISION DESCRIPTION	BY	DATE

DRAWING TITLE: WOOD IMPACT LIFT & SLIDE DOOR

MANUFACTURER: TISCHLER UND SOHN (USA) LTD.
SIX SUBURBAN AVENUE
STAMFORD, CONNECTICUT 06901
203-674-0600

CONSULTANTS: W. W. SCHAEFER ENGINEERING & CONSULTING, P.A. (CA 6809)
7480 150TH COURT NORTH
PALM BEACH GARDENS, FL 33418
PHONE: 561-744-3424

CERTIFICATION: AUG 21 2012
WARREN W. SCHAEFER, P.E.
P.E. NO. 44135

DRAWING NO. 1755 REV.

SHEET NO. 12 OF 32

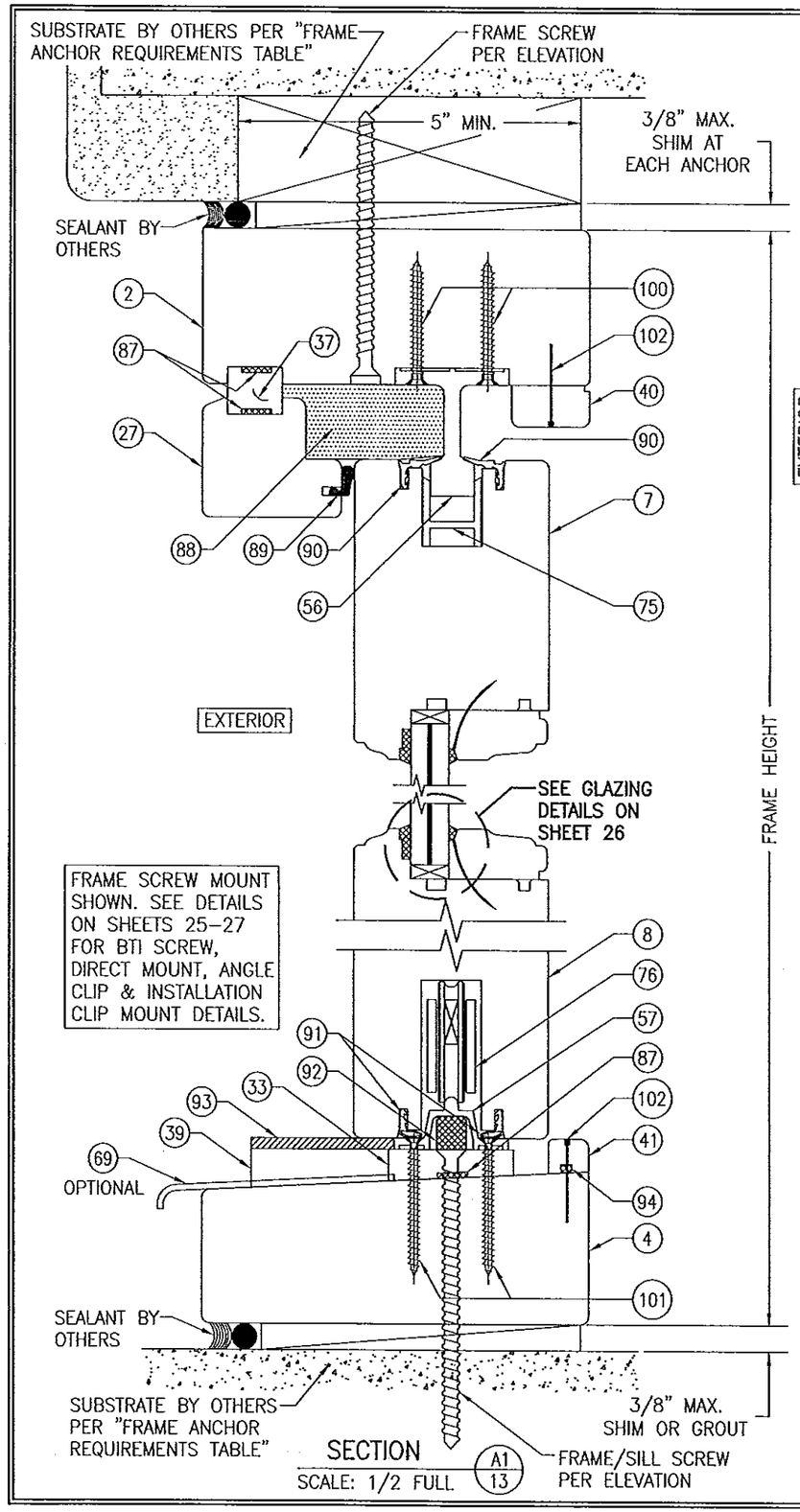

SECTION A1/13
SCALE: 1/2 FULL

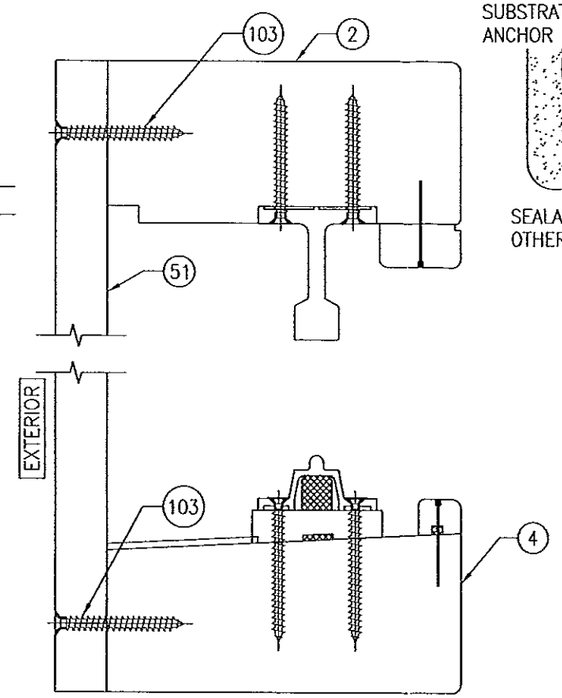

SECTION A2/13
SCALE: 1/2 FULL

(FOR INSTALLATION & DETAIL NOT SHOWN, SEE SECTION A1/13)

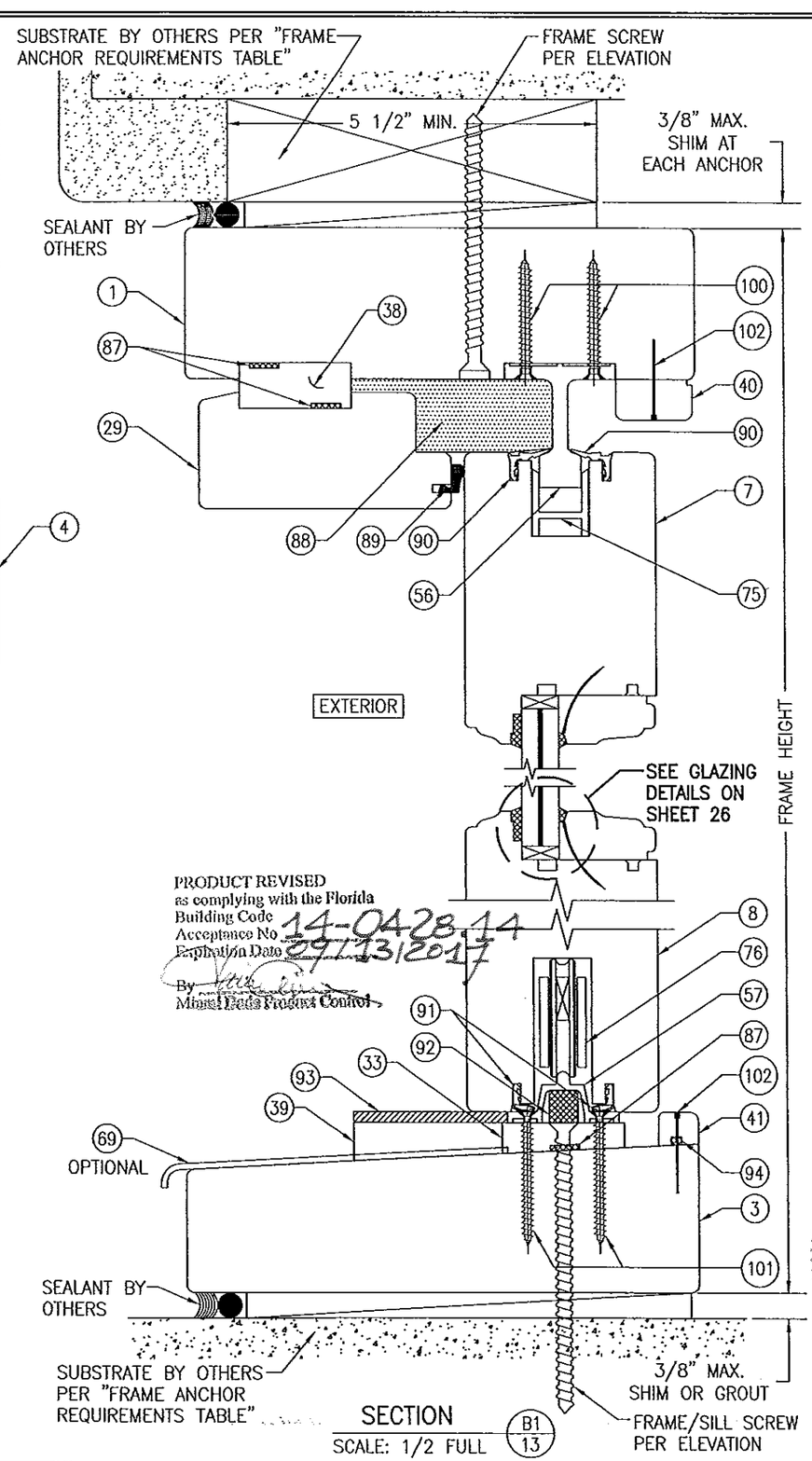

SECTION B1/13
SCALE: 1/2 FULL

PRODUCT REVISED
as complying with the Florida Building Code
Acceptance No 14-0428.14
Expiration Date 09/13/2017
By
Miami-Dade Product Control

Approved as complying with the Florida Building Code
Date 09/13/2012
NOA# 12-0516.08
Miami-Dade Product Control
By

AUG 21 2012

NO.	REVISION DESCRIPTION	BY	DATE

DRAWN BY: W.R.U.
CHECKED BY: W.W.S.
PLOT: 1=2
DATE: 03/29/12

MANUFACTURER
TISCHLER UND SOHN (USA) LTD.
SIX SUBURBAN AVENUE
STAMFORD, CONNECTICUT 06901
203-674-0600

DRAWING TITLE
WOOD IMPACT LIFT & SLIDE DOOR

CONSULTANTS
W. W. SCHAEFER ENGINEERING & CONSULTING, P.A. (CA 6809)
7480 150TH COURT NORTH
PALM BEACH GARDENS, FL 33418
PHONE: 561-744-3424

CERTIFICATION
WARREN W. SCHAEFER, P.E.
LICENSE NO. 44135
STATE OF FLORIDA
PROFESSIONAL ENGINEER
AUG 21 2012

DRAWING NO. 1755
REV.
SHEET NO. 13 OF 32

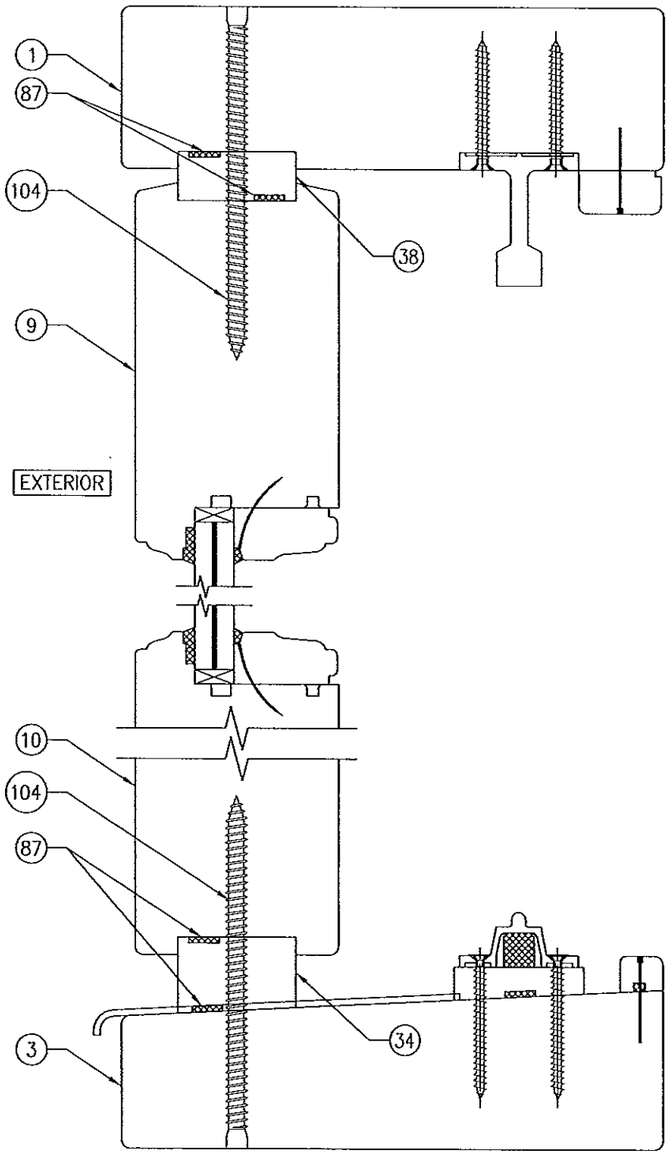

SECTION B2/14
SCALE: 1/2 FULL

(FOR INSTALLATION & DETAIL NOT SHOWN, SEE SECTION B1/13)

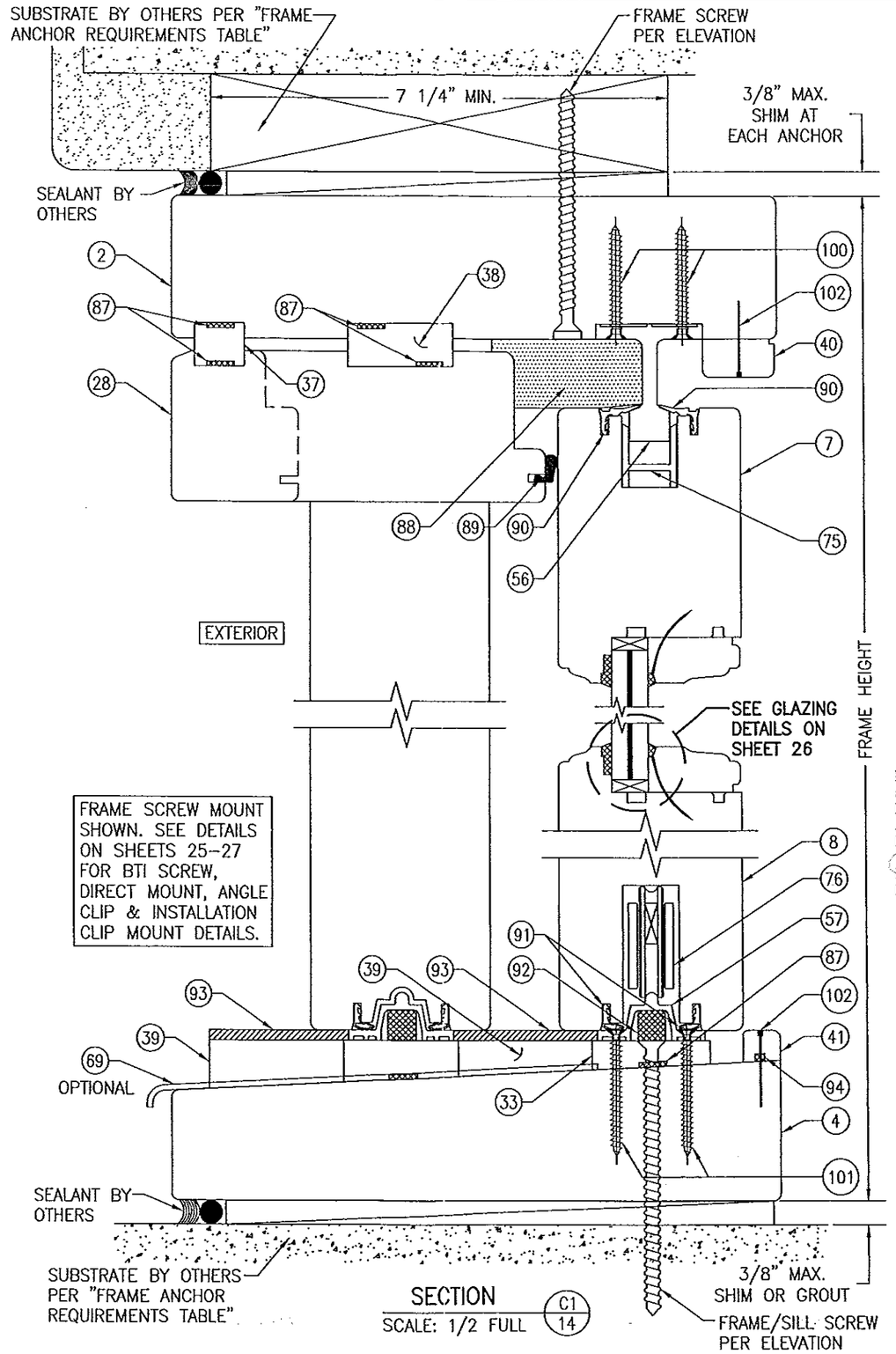

SECTION C1/14
SCALE: 1/2 FULL

PRODUCT REVISED
as complying with the Florida Building Code
Acceptance No 14-0428.14
Expiration Date 09/23/2017
By
Miami Dade Product Control

Approved as complying with the Florida Building Code
Date 09/13/2012
NOA# 12-0516.08
Miami Dade Product Control
By

WARREN W. SCHAEFER LICENSE No. 44135 STATE OF FLORIDA PROFESSIONAL ENGINEER

DRAWN BY: W.R.W.	CHECKED BY: W.W.S.
PLOT: 1=2	DATE: 03/29/12

NO.	REVISION DESCRIPTION	BY	DATE

DRAWING TITLE
WOOD IMPACT LIFT & SLIDE DOOR

MANUFACTURER
TISCHLER UND SOHN (USA) LTD.
SIX SUBURBAN AVENUE
STAMFORD, CONNECTICUT 06901
203-674-0600

CONSULTANTS
W. W. SCHAEFER ENGINEERING & CONSULTING, P.A. (CA 6809)
7480 150TH COURT NORTH
PALM BEACH GARDENS, FL 33418
PHONE: 561-744-3424

CERTIFICATION
AUG 21 2012
WARREN W. SCHAEFER, P.E.
P.E. NO. 44135

DRAWING NO. 1755
REV.
SHEET NO. 14 OF 32

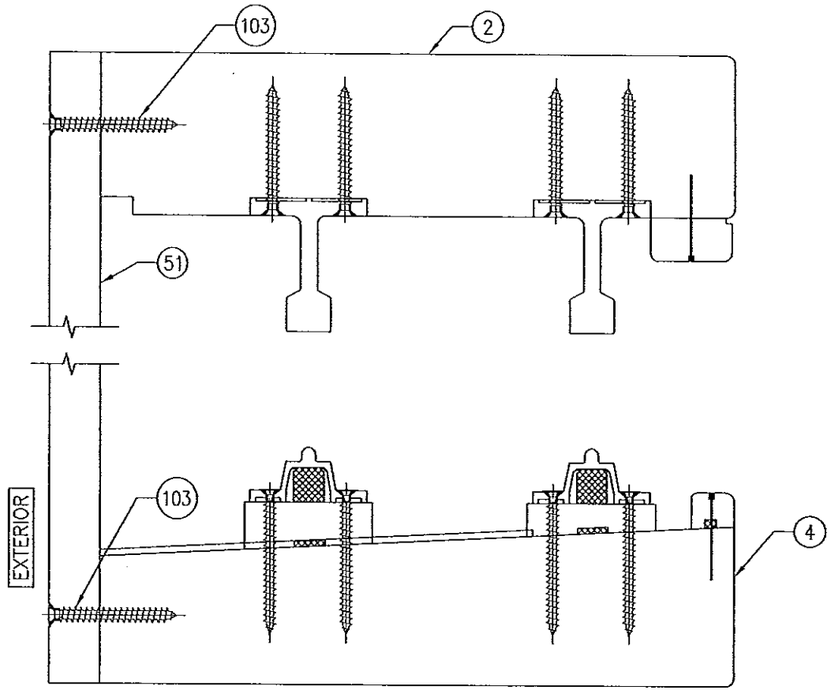

SECTION (C2/15)
SCALE: 1/2 FULL

(FOR INSTALLATION & DETAIL NOT SHOWN, SEE SECTION C1/14.)

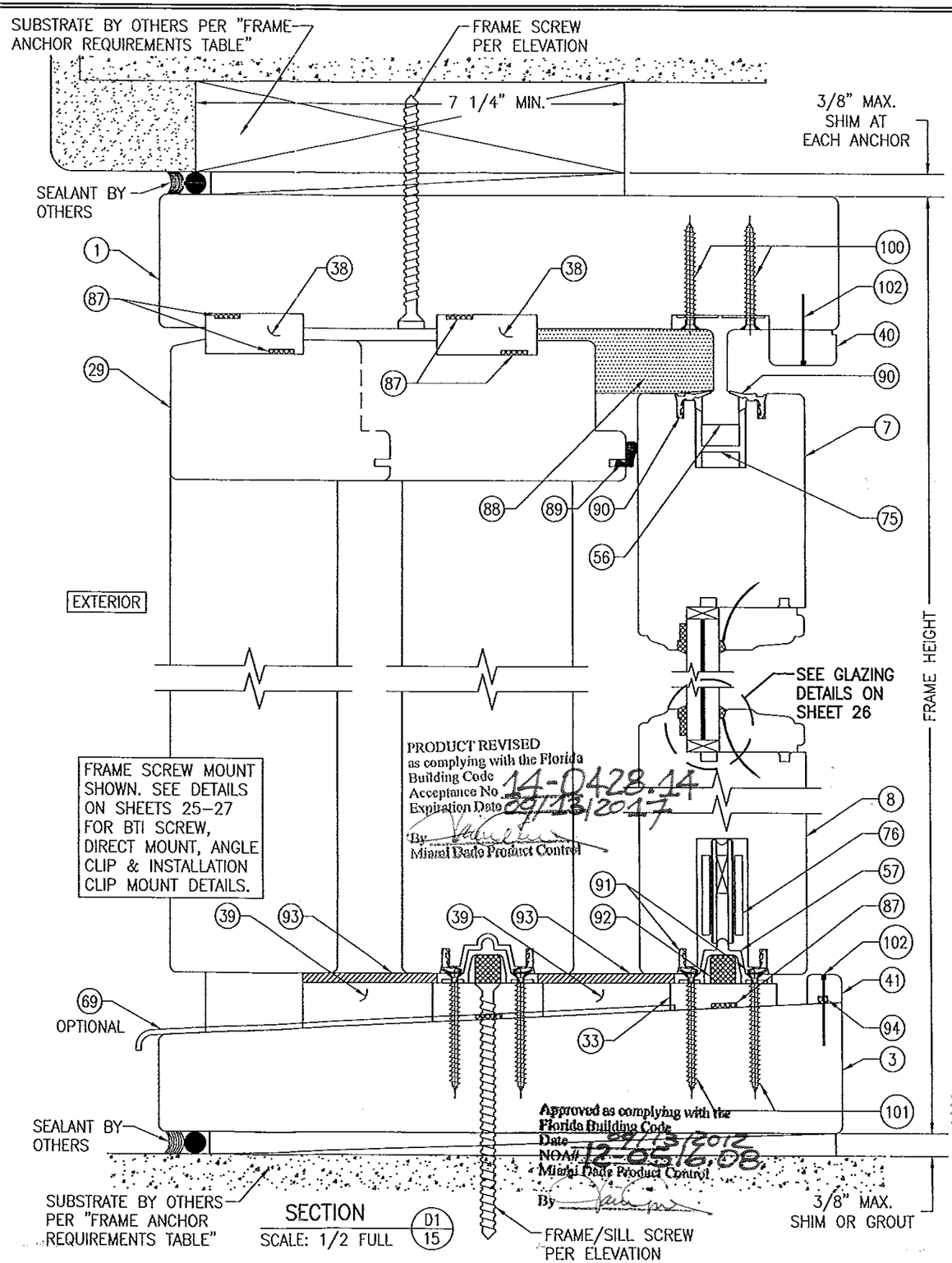

PRODUCT REVISED
as complying with the Florida Building Code
Acceptance No. 14-0428.14
Expiration Date 09/13/2017
By
Miami Dade Product Control

Approved as complying with the Florida Building Code
Date 09/13/2012
NOA# 12-0516.08
Miami Dade Product Control
By

SECTION (D1/15)
SCALE: 1/2 FULL

DRAWN BY: W.R.M.	CHECKED BY: W.W.S.
PLOT: 1=2	DATE: 03/29/12

NO.	REVISION DESCRIPTION	BY	DATE

DRAWING TITLE
WOOD IMPACT LIFT & SLIDE DOOR

MANUFACTURER
TISCHLER UND SOHN (USA) LTD.
SIX SUBURBAN AVENUE
STAMFORD, CONNECTICUT 06901
203-674-0600

CONSULTANTS
W. W. SCHAEFER ENGINEERING & CONSULTING, P.A. (CA 6809)
7480 150TH COURT NORTH
PALM BEACH GARDENS, FL 33418
PHONE: 561-744-3424

CERTIFICATION
AUG 21 2012
WARREN W. SCHAEFER P.E.
P.E. NO. 44135

WARREN W. SCHAEFER LICENSE No. 44135 STATE OF FLORIDA PROFESSIONAL ENGINEER

DRAWING NO. 1755
REV.
SHEET NO. 15 OF 32

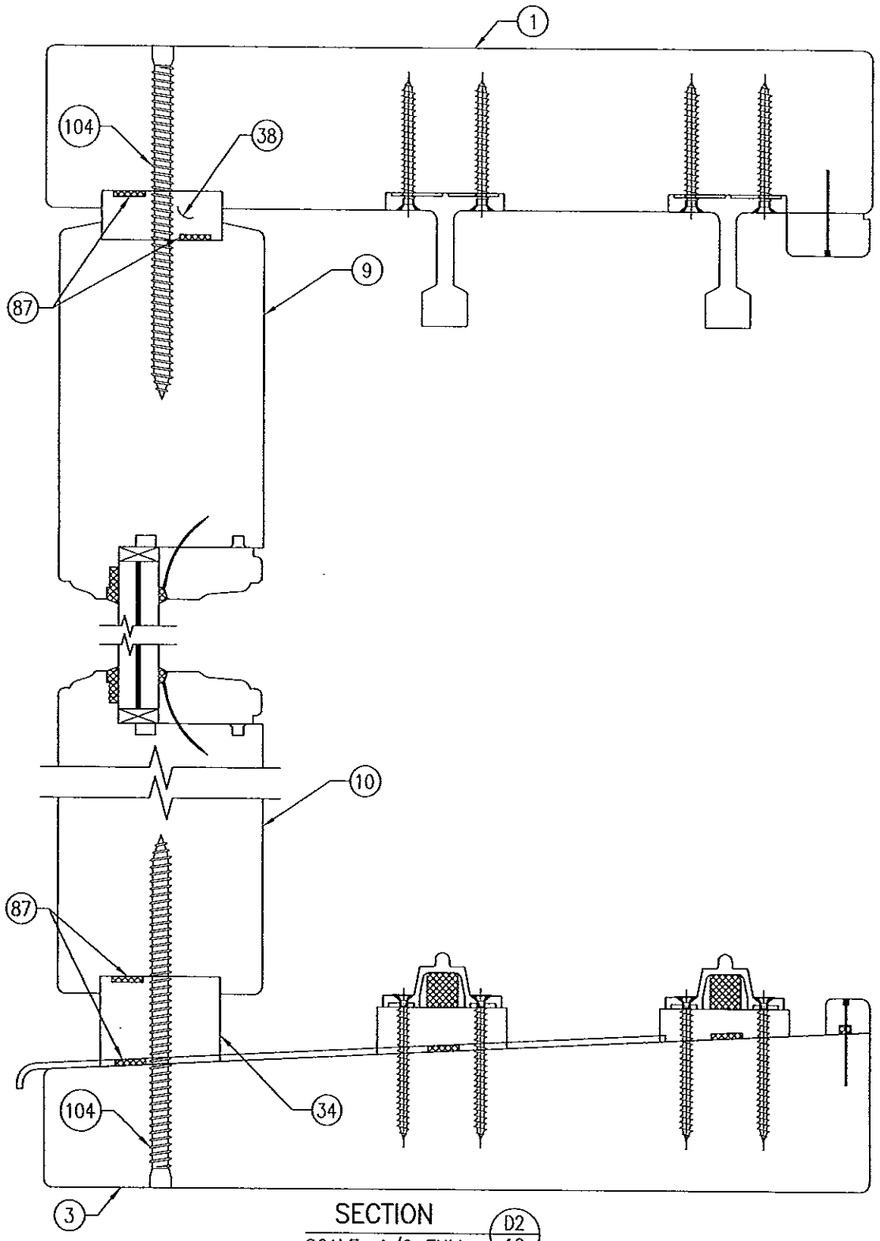

SECTION D2/16
SCALE: 1/2 FULL

(FOR INSTALLATION & DETAIL NOT SHOWN, SEE SECTION D1/15)

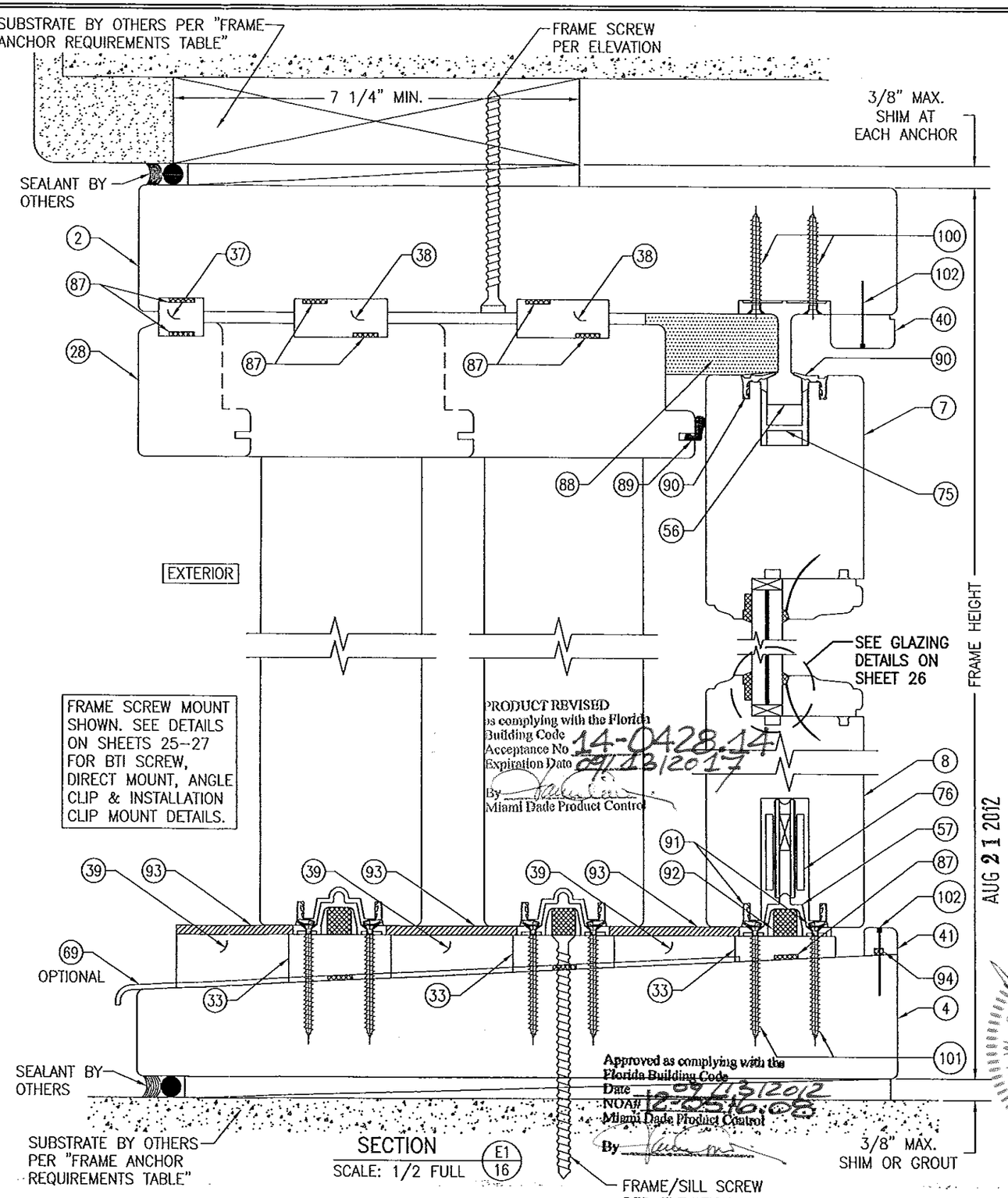

SECTION E1/16
SCALE: 1/2 FULL

PRODUCT REVISED
as complying with the Florida Building Code
Acceptance No 14-0428.14
Expiration Date 09/23/2017
By
Miami Dade Product Control

Approved as complying with the Florida Building Code
Date 08/13/2012
NOA# 12-0516.08
Miami Dade Product Control
By

AUG 21 2012

DRAWN BY: W.R.M.	CHECKED BY: W.W.S.
PLOT: 1=2	DATE: 03/29/12

NO.	REVISION DESCRIPTION	BY	DATE

DRAWING: WOOD IMPACT LIFT & SLIDE DOOR

MANUFACTURER
TISCHLER UND SOHN (USA) LTD.
SIX SUBURBAN AVENUE
STAMFORD, CONNECTICUT 06901
203-674-0600

CONSULTANTS
W. W. SCHAEFER ENGINEERING & CONSULTING, P.A. (CA 6809)
7480 150TH COURT NORTH
PALM BEACH GARDENS, FL 33418
PHONE: 561-744-3424

CERTIFICATION
WARREN W. SCHAEFER, P.E.
FL. P.E. (NO) 44135
AUG 21 2012

DRAWING NO. 1755
REV.
SHEET NO. 16 OF 32

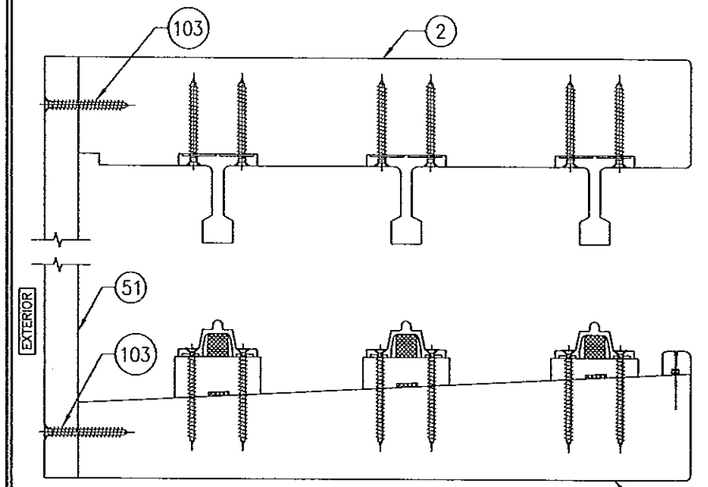

SECTION E2/17
SCALE: 1/3 FULL

(FOR INSTALLATION & DETAIL NOT SHOWN, SEE SECTION E1/16)

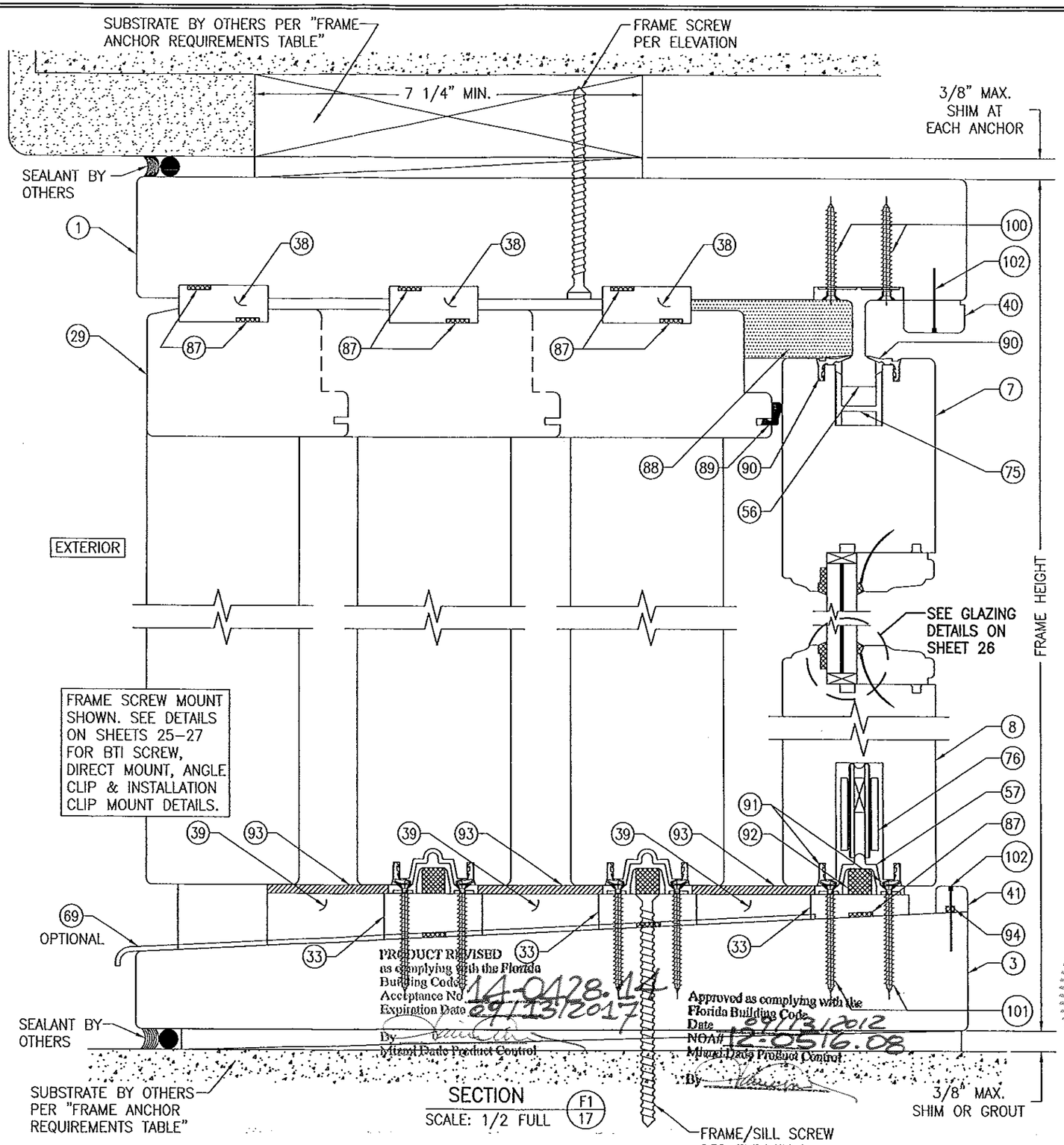

SECTION F1/17
SCALE: 1/2 FULL

PRODUCT REVISED as complying with the Florida Building Code Acceptance No 14-0428.14 Expiration Date 09/13/2017
By
Miami-Dade Product Control

Approved as complying with the Florida Building Code Date 09/13/2012 NOA# 12-0516.08
Miami-Dade Product Control
By

AUG 21 2012

DRAWN BY: W.R.M.	CHECKED BY: W.W.S.
PLOT: 1=2	DATE: 03/29/12

NO.	REVISION DESCRIPTION	BY	DATE

DRAWING TITLE
WOOD IMPACT LIFT & SLIDE DOOR

MANUFACTURER
TISCHLER UND SOHN (USA) LTD.
SIX SUBURBAN AVENUE
STAMFORD, CONNECTICUT 06901
203-674-0600

CONSULTANTS
W. W. SCHAEFER ENGINEERING & CONSULTING, P.A. (CA 6809)
7480 150TH COURT NORTH
PALM BEACH GARDENS, FL 33418
PHONE: 561-744-3424

CERTIFICATION
WARREN W. SCHAEFER No. 44135 STATE OF FLORIDA PROFESSIONAL ENGINEER
AUG 21 2012

DRAWING NO. 1755
REV.
SHEET NO. 17 OF 32

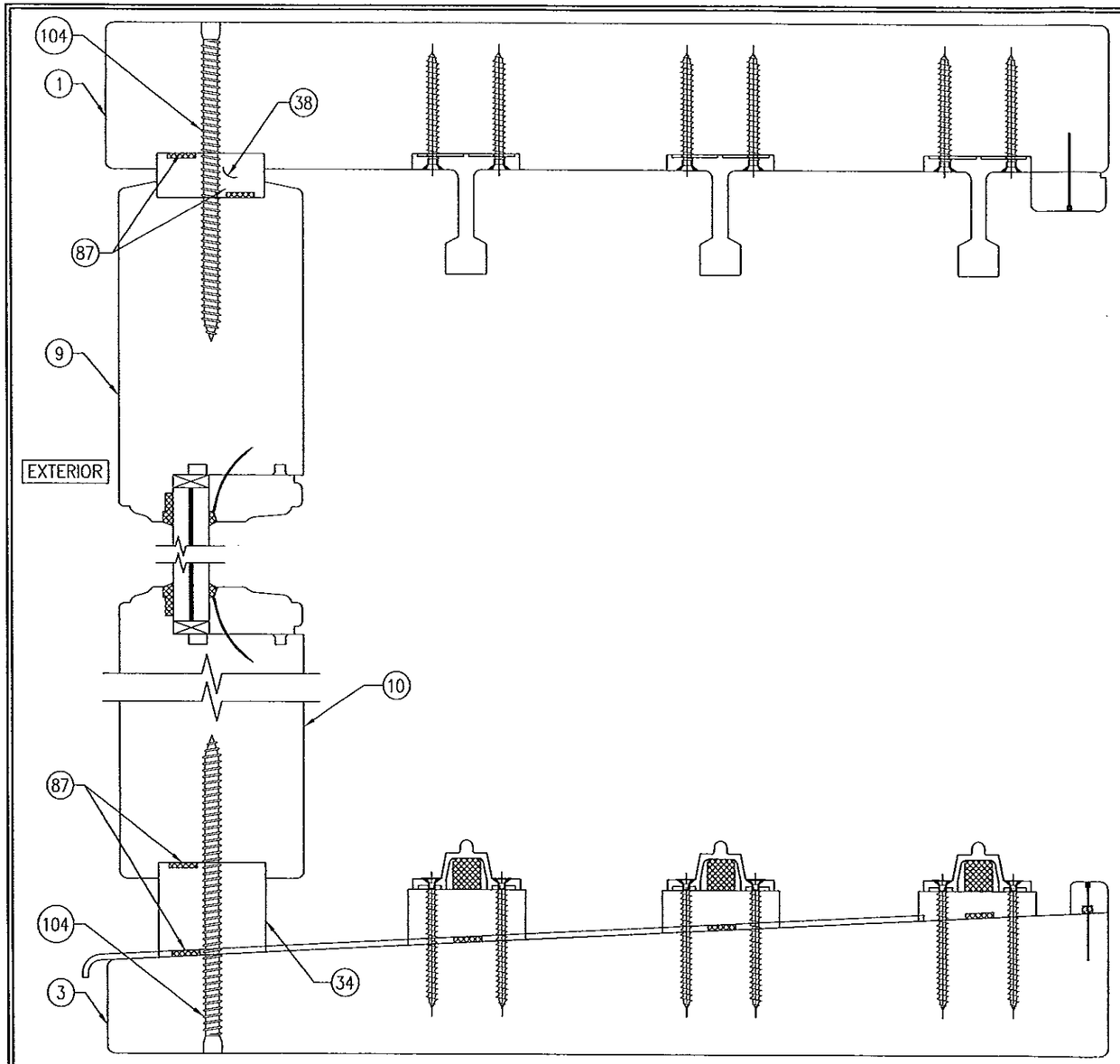

SECTION F2/18
SCALE: 1/2 FULL

(FOR INSTALLATION & DETAIL NOT SHOWN, SEE SECTION F1/17)

PRODUCT REVISED
as complying with the Florida
Building Code
Acceptance No 14-0428.14
Expiration Date 09/13/2017
By
Miami Dade Product Control

Approved as complying with the
Florida Building Code
Date 09/13/2012
NOA# 12-0516.08
Miami Dade Product Control
By

WARREN W. SCHAEFFER LICENSE No. 44135 STATE OF FLORIDA PROFESSIONAL ENGINEER

DRAWN BY: W.R.M.	CHECKED BY: W.W.S.
PLOT: 1=2	DATE: 03/29/12

NO.	REVISION DESCRIPTION	BY	DATE

DRAWING TITLE
WOOD IMPACT LIFT & SLIDE DOOR

MANUFACTURER
TISCHLER UND SOHN (USA) LTD.
SIX SUBURBAN AVENUE
STAMFORD, CONNECTICUT 06901
203-674-0600

CONSULTANTS
W. W. SCHAEFFER ENGINEERING & CONSULTING, P.A. (CA 6809)
7480 150TH COURT NORTH
PALM BEACH GARDENS, FL 33418
PHONE: 561-744-3424

CERTIFICATION
AUG 21 2012
WARREN W. SCHAEFFER, P.E.
P.E. NO. 44135

DRAWING NO. 1755
REV.
SHEET NO. 18 OF 32

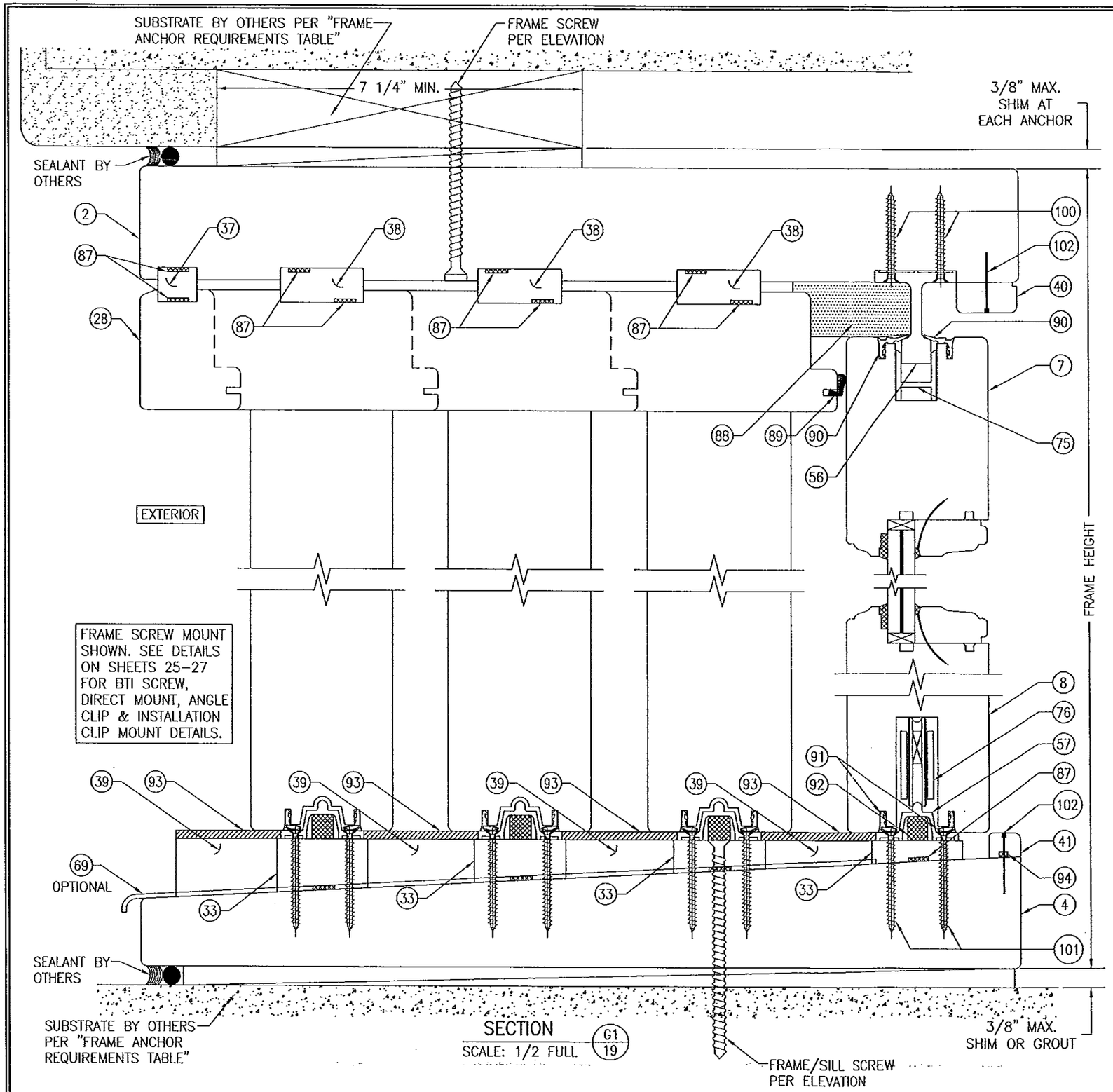

SECTION G1/19
SCALE: 1/2 FULL

PRODUCT REVISED
as complying with the Florida Building Code
Acceptance No. 14-0428.14
Expiration Date 09/13/2017
By
Miami Dade Product Control

Approved as complying with the Florida Building Code
Date 09/13/2012
NOA# 12-0516.08
Miami Dade Product Control
By

WARREN W. SCHAEFER LICENSE No. 44135 STATE OF FLORIDA PROFESSIONAL ENGINEER

DRAWN BY: W.R.M.	CHECKED BY: W.W.S.
PLOT: 1=2	DATE: 03/29/12

NO.	REVISION DESCRIPTION	BY	DATE

DRAWING TITLE
WOOD IMPACT LIFT & SLIDE DOOR

MANUFACTURER
TISCHLER UND SOHN (USA) LTD.
SIX SUBURBAN AVENUE
STAMFORD, CONNECTICUT 06901
203-674-0600

CONSULTANTS
W. W. SCHAEFER ENGINEERING & CONSULTING, P.A. (CA 6809)
7480 150TH COURT NORTH
PALM BEACH GARDENS, FL 33418
PHONE: 561-744-3424

CERTIFICATION
AUG 21 2012
WARREN W. SCHAEFER, P.E.
P.E. NO. 44135

DRAWING NO. 1755
REV.

SHEET NO. 19 OF 32

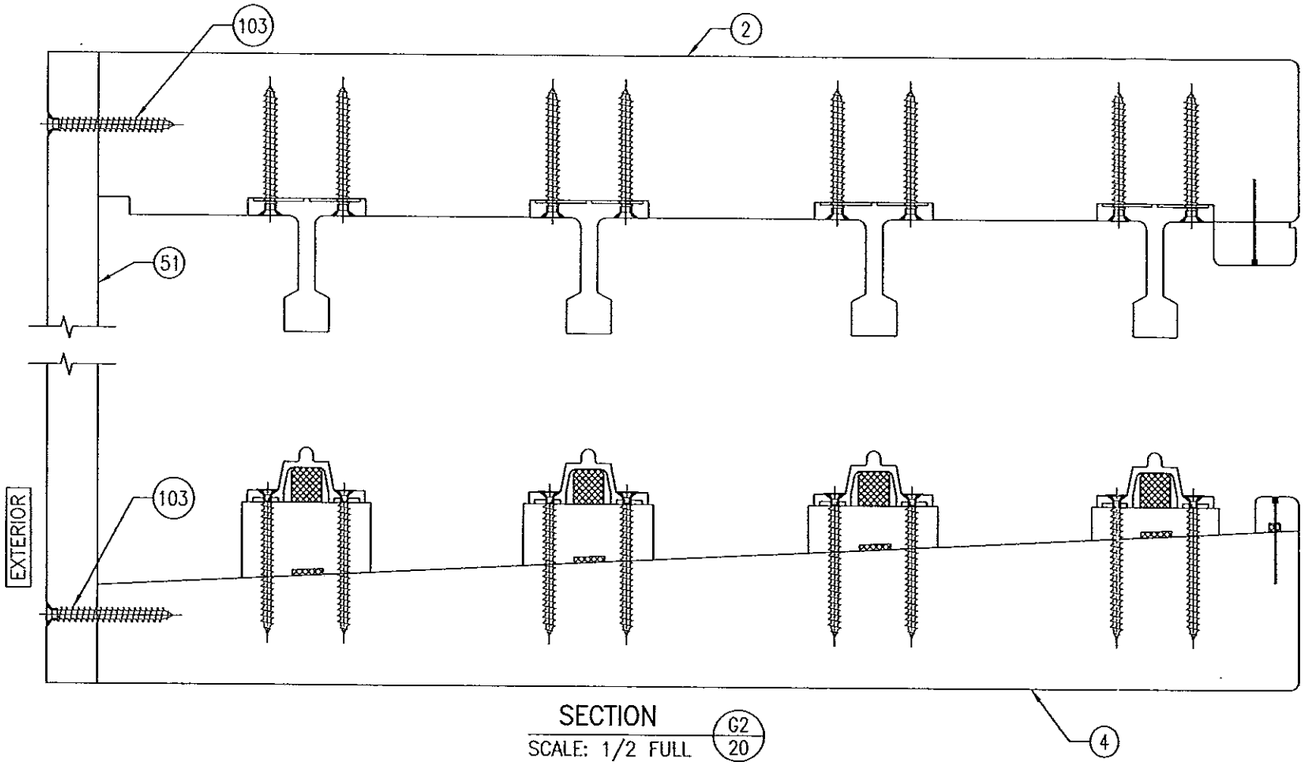

SECTION G2/20
SCALE: 1/2 FULL

(FOR INSTALLATION & DETAIL NOT SHOWN, SEE SECTION G1/19)

PRODUCT REVISED
as complying with the Florida
Building Code
Acceptance No 14-0428.14
Expiration Date 09/13/2017
By
Miami Dade Product Control

Approved as complying with the
Florida Building Code
Date 03/13/2012
NOA# 12-0516.08
Miami Dade Product Control
By

WARREN W. SCHAEFER LICENSE No. 44135 STATE OF FLORIDA PROFESSIONAL ENGINEER

DRAWN BY: W.R.M.	CHECKED BY: W.W.S.
PLOT: 1=2	DATE: 03/29/12

NO.	REVISION DESCRIPTION	BY	DATE

DRAWING TITLE
WOOD IMPACT LIFT & SLIDE DOOR

MANUFACTURER
TISCHLER UND SOHN (USA) LTD.
SIX SUBURBAN AVENUE
STAMFORD, CONNECTICUT 06901
203-674-0600

CONSULTANTS
W. W. SCHAEFER ENGINEERING
& CONSULTING, P.A. (CA 6809)
7480 150TH COURT NORTH
PALM BEACH GARDENS, FL 33418
PHONE: 561-744-3424

CERTIFICATION
AUG 21 2012
WARREN W. SCHAEFER, P.E.
P.E. NO. 44135

DRAWING NO. 1755
REV.
SHEET NO. 20 OF 32

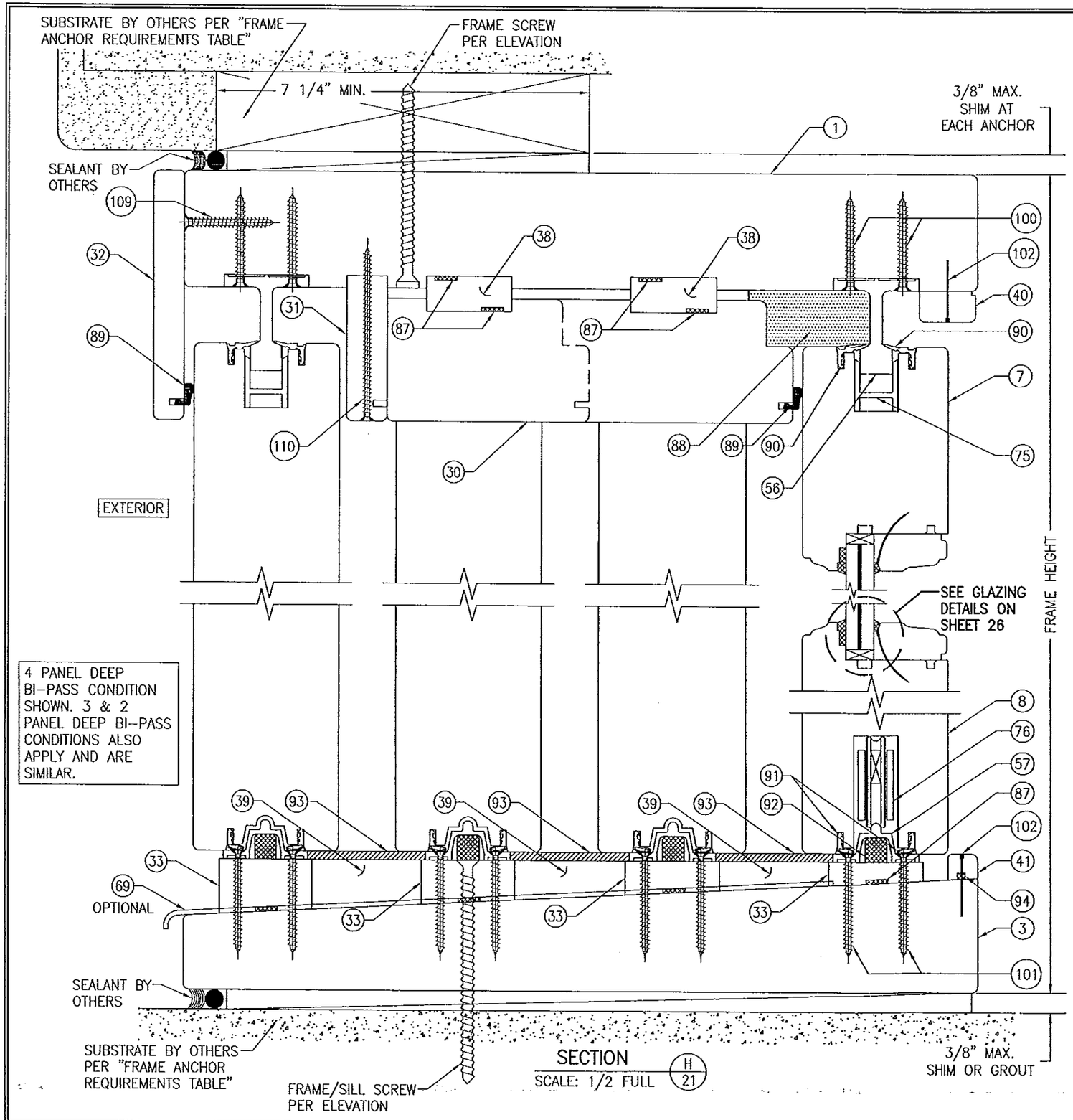

SECTION (H / 21)
SCALE: 1/2 FULL

FRAME SCREW MOUNT SHOWN. SEE DETAILS ON SHEETS 25–27 FOR BTI SCREW, DIRECT MOUNT, ANGLE CLIP & INSTALLATION CLIP MOUNT DETAILS.

PRODUCT REVISED
as complying with the Florida Building Code
Acceptance No 14-0428.14
Expiration Date 09/13/2017
By
Miami Dade Product Control

Approved as complying with the Florida Building Code
Date 09/13/2012
NOA# 12-0516.08
Miami Dade Product Control
By

WARREN W. SCHAEFER LICENSE No. 44135 STATE OF FLORIDA PROFESSIONAL ENGINEER

DRAWN BY: W.R.M.	CHECKED BY: W.W.S.
PLOT: 1=2	DATE: 03/29/12

NO.	REVISION DESCRIPTION	BY	DATE

DRAWING TITLE
WOOD IMPACT LIFT & SLIDE DOOR

MANUFACTURER
TISCHLER UND SOHN (USA) LTD.
SIX SUBURBAN AVENUE
STAMFORD, CONNECTICUT 06901
203-674-0600

CONSULTANTS
W. W. SCHAEFER ENGINEERING & CONSULTING, P.A. (CA 6809)
7480 150TH COURT NORTH
PALM BEACH GARDENS, FL 33418
PHONE: 561-744-3424

CERTIFICATION
AUG 21 2012
WARREN W. SCHAEFER, P.E.
P.E. NO. 44135

DRAWING NO. 1755
REV.
SHEET NO. 21 OF 32

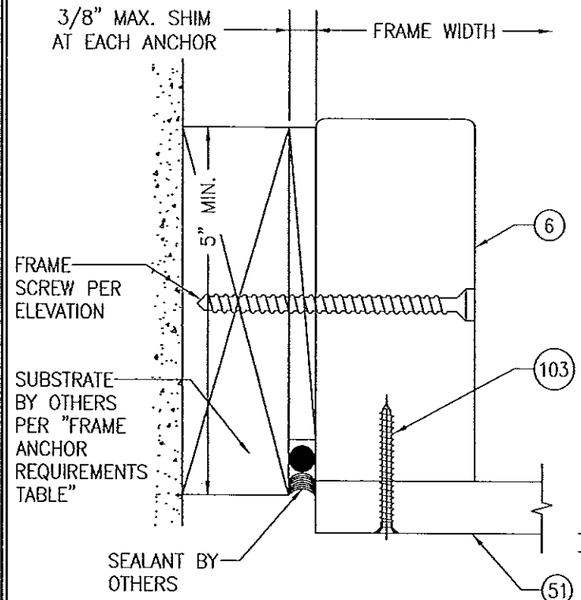

SECTION J/22
SCALE: 1/2 FULL

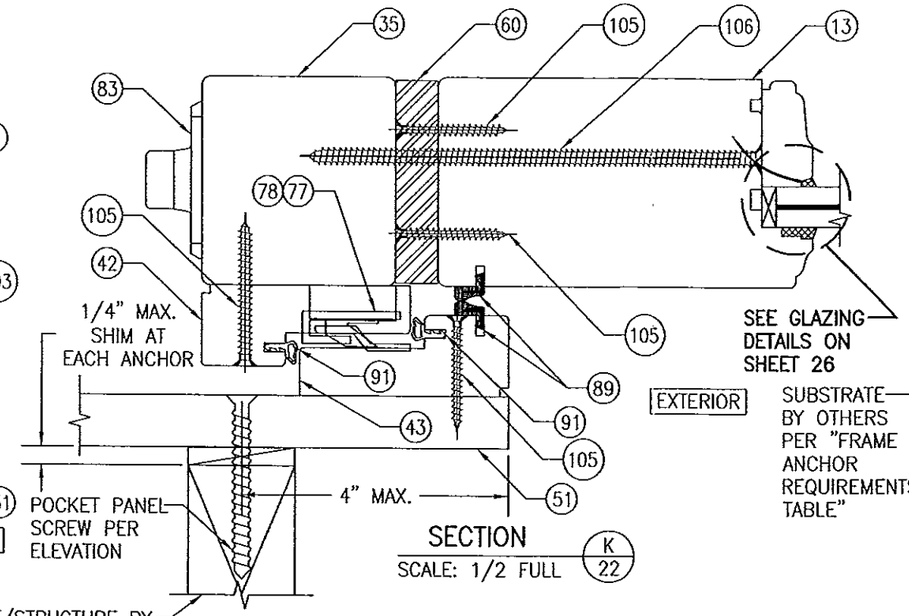

SECTION K/22
SCALE: 1/2 FULL

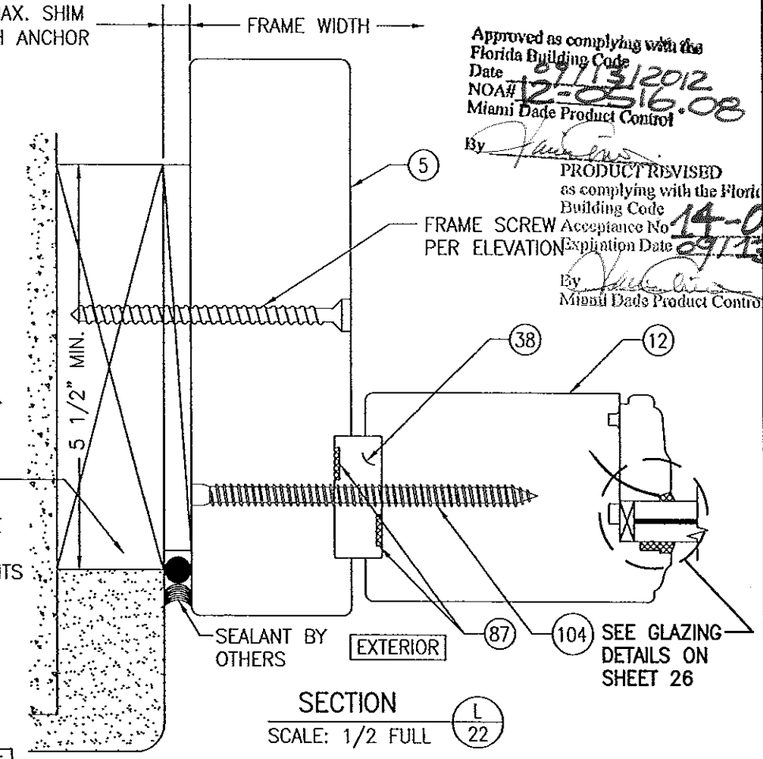

SECTION L/22
SCALE: 1/2 FULL

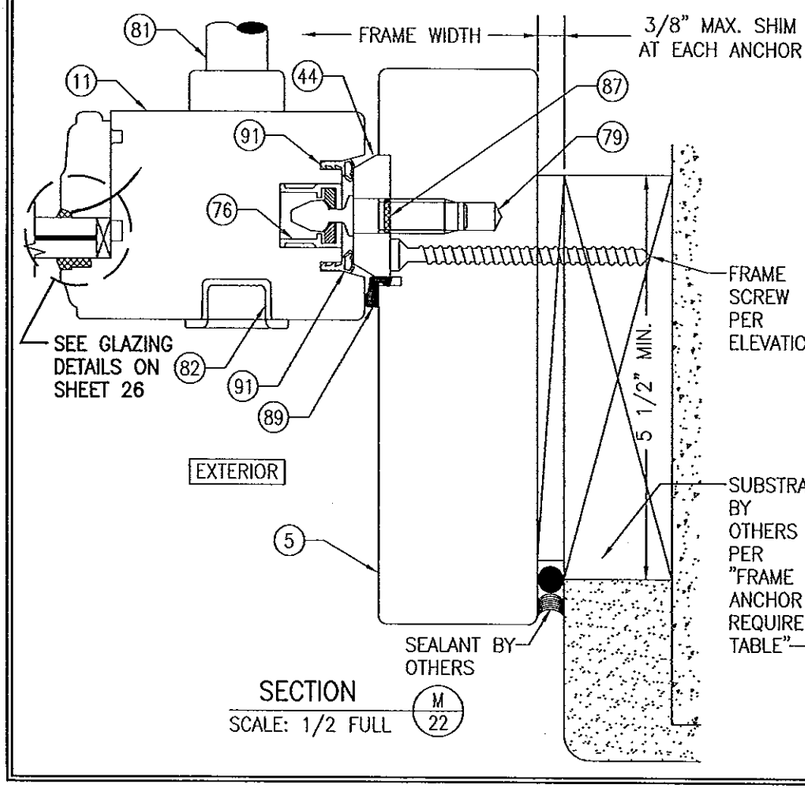

SECTION M/22
SCALE: 1/2 FULL

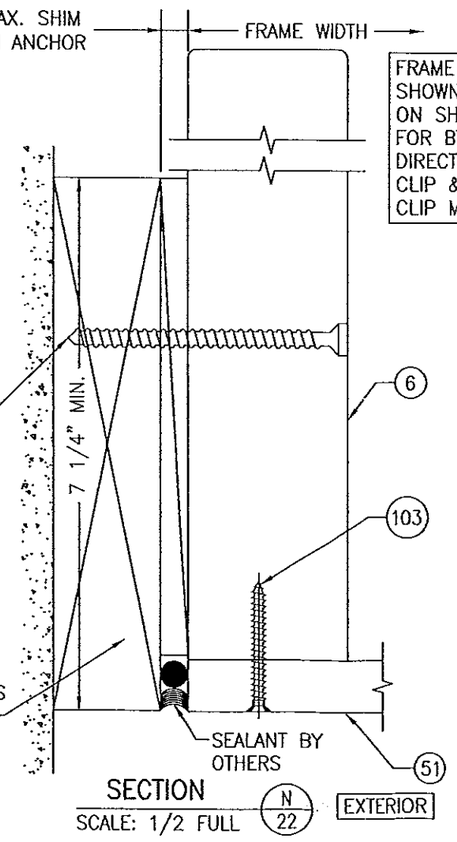

SECTION N/22
SCALE: 1/2 FULL

FRAME SCREW MOUNT SHOWN. SEE DETAILS ON SHEETS 25--27 FOR BTI SCREW, DIRECT MOUNT, ANGLE CLIP & INSTALLATION CLIP MOUNT DETAILS.

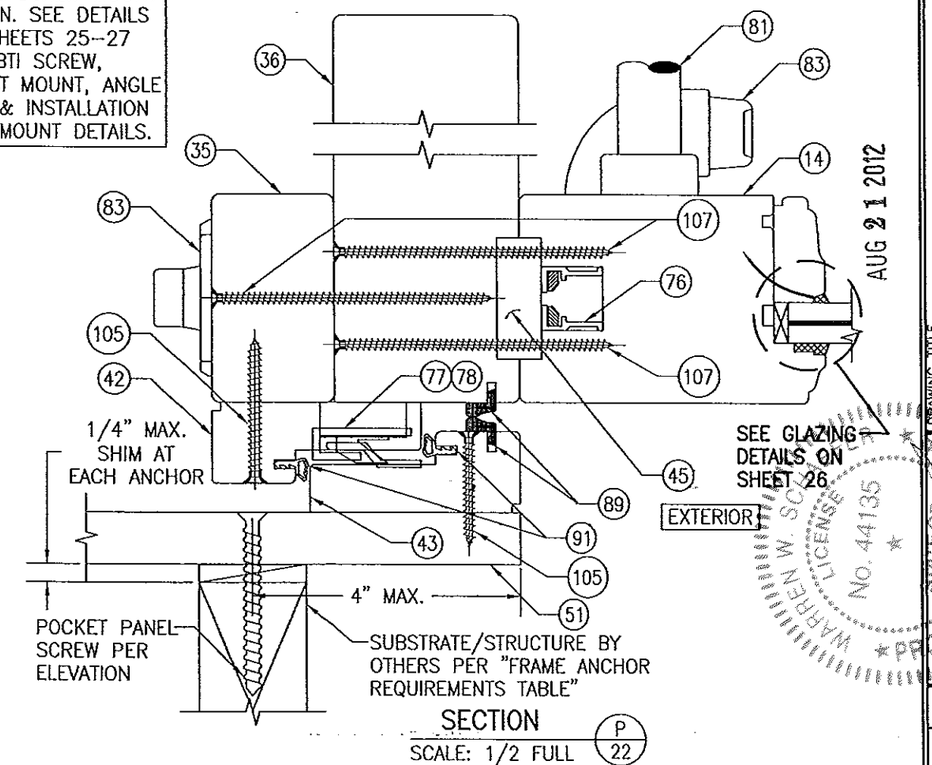

SECTION P/22
SCALE: 1/2 FULL

Approved as complying with the Florida Building Code
Date 09/13/2012
NOA# 12-0516.08
Miami Dade Product Control
By

PRODUCT REVISED
as complying with the Florida Building Code
Acceptance No 14-0528.14
Expiration Date 09/13/2017
By
Miami Dade Product Control

AUG 21 2012

NO.	REVISION DESCRIPTION	BY	DATE

DRAWN BY: W.R.M. | CHECKED BY: W.W.S.
PLOT: 1=2 | DATE: 03/29/12

DRAWING TITLE: WOOD IMPACT LIFT & SLIDE DOOR

MANUFACTURER: TISCHLER UND SOHN (USA) LTD.
SIX SUBURBAN AVENUE
STAMFORD, CONNECTICUT 06901
203-674-0600

CONSULTANTS: W. W. SCHAEFER ENGINEERING & CONSULTING, P.A. (CA 6809)
7480 150TH COURT NORTH
PALM BEACH GARDENS, FL 33418
PHONE: 561-744-3424

CERTIFICATION: WARREN W. SCHAEFER, P.E. No. 44135 — PROFESSIONAL ENGINEER — STATE OF FLORIDA — LICENSE — AUG 21 2012
WARREN W. SCHAEFER, P.E.
P.E. NO. 44135

DRAWING NO. 1755 | REV.
SHEET NO. 22 OF 32

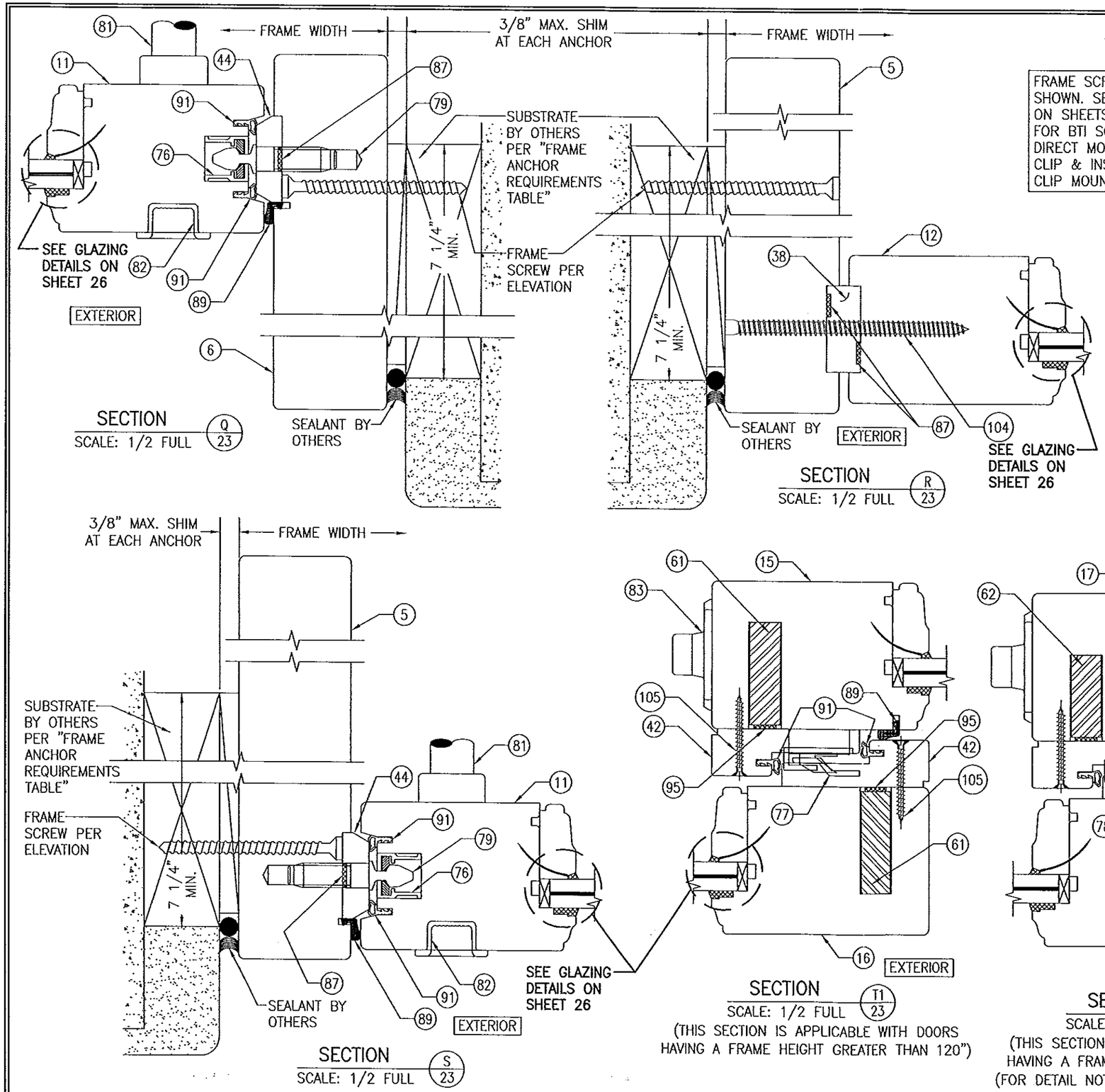

FRAME SCREW MOUNT SHOWN. SEE DETAILS ON SHEETS 25–27 FOR BTI SCREW, DIRECT MOUNT, ANGLE CLIP & INSTALLATION CLIP MOUNT DETAILS.

PRODUCT REVISED
as complying with the Florida Building Code
Acceptance No. 14-0428.14
Expiration Date 09/13/2017
By
Miami Dade Product Control

Approved as complying with the Florida Building Code
Date 08/13/2012
NOA# 12-0516.08
Miami Dade Product Control
By

WARREN W. SCHAEFER LICENSE No. 44135 STATE OF FLORIDA PROFESSIONAL ENGINEER

NO.	REVISION DESCRIPTION	BY	DATE

DRAWN BY: W.R.W. | CHECKED BY: W.W.S.
PLOT: 1=2 | DATE: 03/29/12

DRAWING TITLE: WOOD IMPACT LIFT & SLIDE DOOR

MANUFACTURER: TISCHLER UND SOHN (USA) LTD.
SIX SUBURBAN AVENUE
STAMFORD, CONNECTICUT 06901
203-674-0600

CONSULTANTS: W. W. SCHAEFER ENGINEERING & CONSULTING, P.A. (CA 6809)
7480 150TH COURT NORTH
PALM BEACH GARDENS, FL 33418
PHONE: 561-744-3424

CERTIFICATION
AUG 21 2012
WARREN W. SCHAEFER, P.E.
P.E. NO. 44135

DRAWING NO. 1755 | REV.
SHEET NO. 23 OF 32

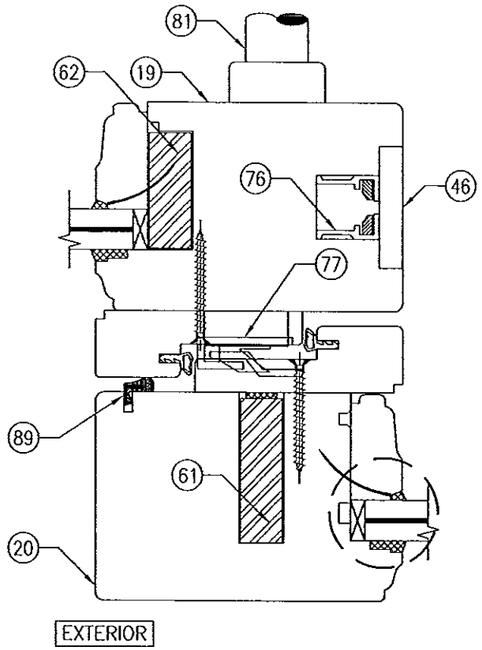

SECTION T3/24
SCALE: 1/2 FULL
(THIS SECTION IS APPLICABLE WITH DOORS HAVING A FRAME HEIGHT GREATER THAN 120")
(FOR DETAIL NOT SHOWN, SEE SECTION T1/23)

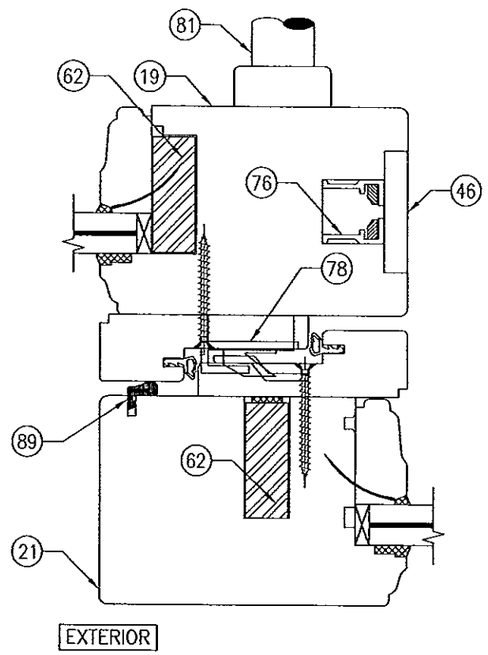

SECTION T4/24
SCALE: 1/2 FULL
(THIS SECTION IS APPLICABLE WITH DOORS HAVING A FRAME HEIGHT OF 120" & LESS)
(FOR DETAIL NOT SHOWN, SEE SECTION T1/23)

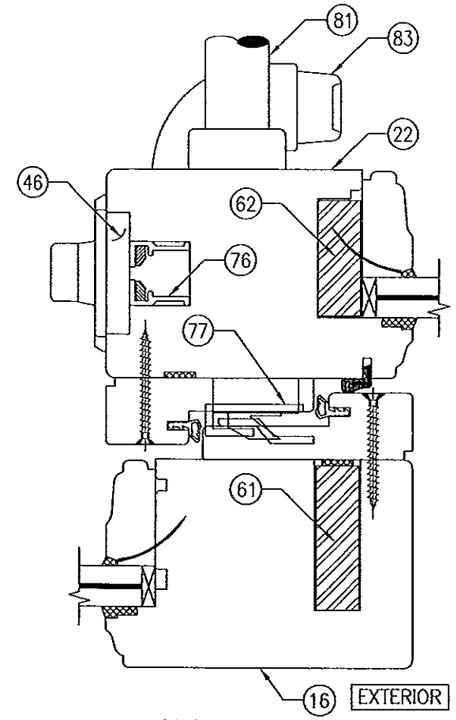

SECTION T5/24
SCALE: 1/2 FULL
(THIS SECTION IS APPLICABLE WITH DOORS HAVING A FRAME HEIGHT GREATER THAN 120")
(FOR DETAIL NOT SHOWN, SEE SECTION T1/23)

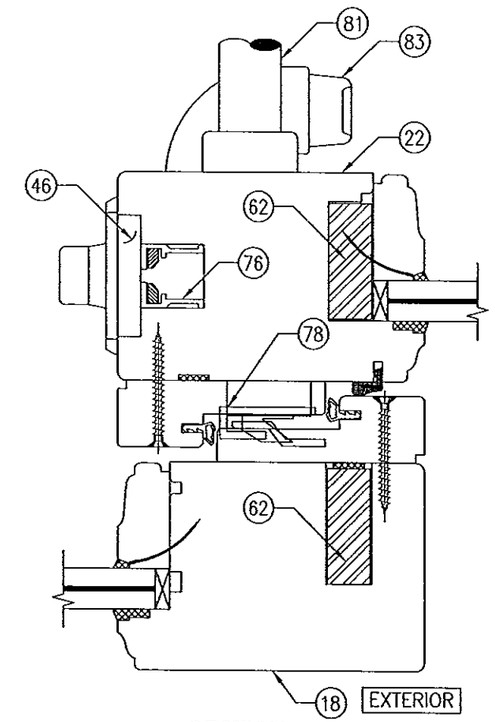

SECTION T6/24
SCALE: 1/2 FULL
(THIS SECTION IS APPLICABLE WITH DOORS HAVING A FRAME HEIGHT OF 120" & LESS)
(FOR DETAIL NOT SHOWN, SEE SECTION T1/23)

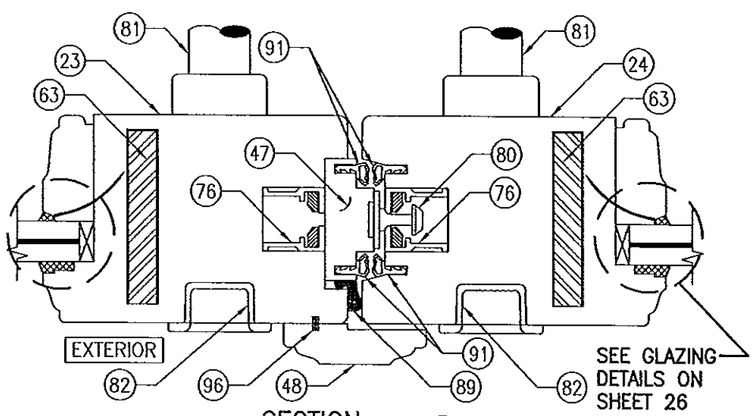

SECTION U1/24
SCALE: 1/2 FULL
(THIS SECTION IS APPLICABLE WITH DOORS HAVING A FRAME HEIGHT GREATER THAN 120")

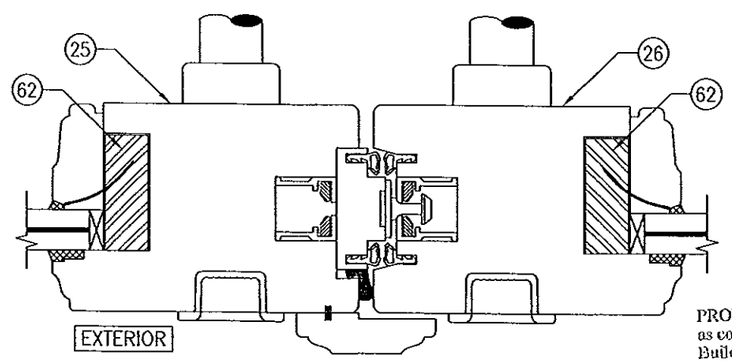

SECTION U2/24
SCALE: 1/2 FULL
(THIS SECTION IS APPLICABLE WITH DOORS HAVING A FRAME HEIGHT OF 120" & LESS)
(FOR DETAIL NOT SHOWN, SEE SECTION U1/24)

PRODUCT REVISED
as complying with the Florida
Building Code
Acceptance No 14-0428.14
Expiration Date 09/13/2017
By
Miami Dade Product Control

Approved as complying with the
Florida Building Code
Date 09/13/2012
NOA# 12-0516.08
Miami Dade Product Control
By

WARREN W. SCHAEFER LICENSE No. 44135 STATE OF FLORIDA PROFESSIONAL ENGINEER

DRAWN BY: W.R.M.	CHECKED BY: W.W.S.
PLOT: 1=2	DATE: 03/29/12

NO.	REVISION DESCRIPTION	BY	DATE

DRAWING TITLE
WOOD IMPACT LIFT & SLIDE DOOR

MANUFACTURER
TISCHLER UND SOHN (USA) LTD.
SIX SUBURBAN AVENUE
STAMFORD, CONNECTICUT 06901
203-674-0600

CONSULTANTS
W. W. SCHAEFER ENGINEERING & CONSULTING, P.A. (CA 6809)
7480 150TH COURT NORTH
PALM BEACH GARDENS, FL 33418
PHONE: 561-744-3424

CERTIFICATION
AUG 21 2012
WARREN W. SCHAEFER, P.E.
P.E. NO. 44135

DRAWING NO. 1755
REV.
SHEET NO. 24 OF 32

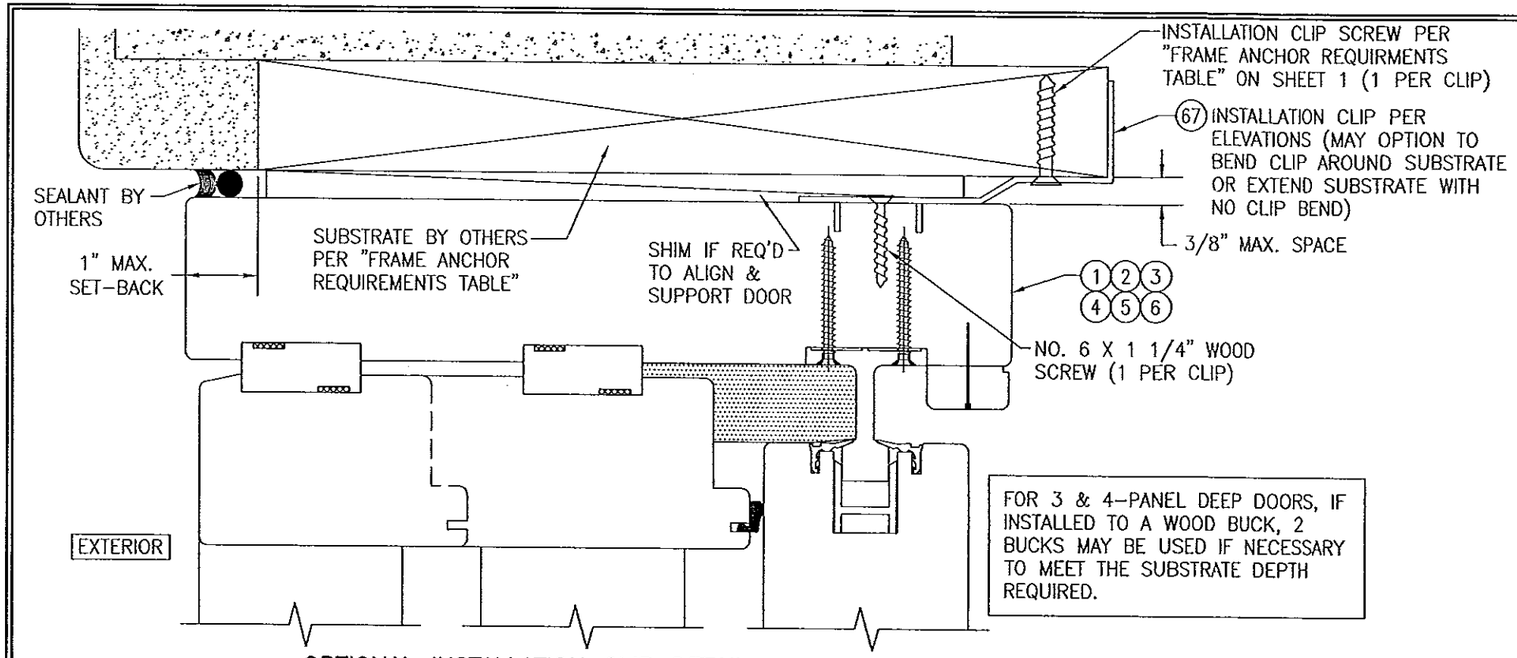

OPTIONAL INSTALLATION CLIP DETAIL

(HEAD SECTION SHOWN, SIDES & SILL ARE INSTALLED THE SAME)
(FOR DETAIL NOT SHOWN, SEE OTHER SECTIONS)
(3-PANEL DEEP DOOR SHOWN. ALL OTHER DEPTH DOORS ALSO APPLY.)

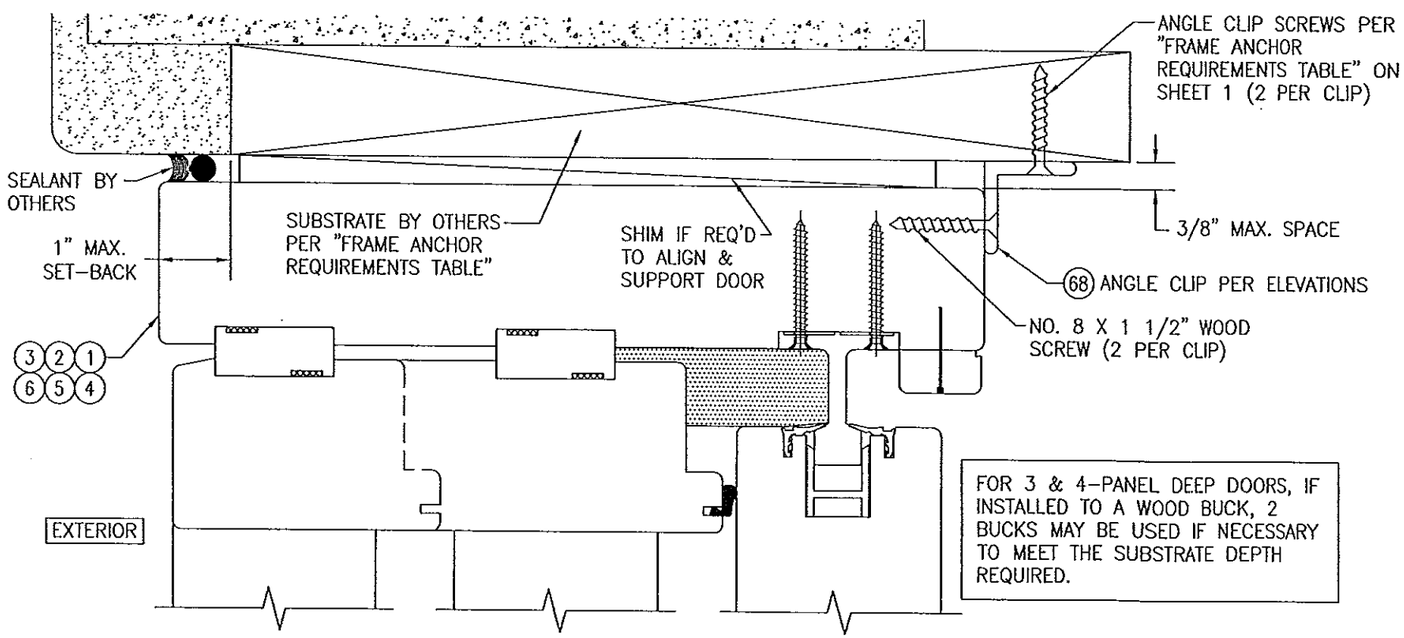

OPTIONAL ANGLE CLIP INSTALLATION DETAIL
(ANGLE LEG TURNED OUT & SHEAR CONNECTED TO SUBSTRATE)

(HEAD SECTION SHOWN, SIDES & SILL ARE INSTALLED THE SAME)
(FOR DETAIL NOT SHOWN, SEE OTHER SECTIONS)
(3-PANEL DEEP DOOR SHOWN. ALL OTHER DEPTH DOORS ALSO APPLY.)

PRODUCT REVISED
as complying with the Florida
Building Code
Acceptance No 14-0428.14
Expiration Date 09/13/2017
By
Miami Dade Product Control

Approved as complying with the
Florida Building Code
Date 09/13/2012
NOA# 12-0516.08
Miami Dade Product Control
By

WARREN W. SCHAEFER LICENSE No. 44135 STATE OF FLORIDA PROFESSIONAL ENGINEER

DRAWN BY: W.R.M.	CHECKED BY: W.W.S.
PLOT: 1=2	DATE: 03/29/12

NO.	REVISION DESCRIPTION	BY	DATE

DRAWING TITLE
WOOD IMPACT LIFT & SLIDE DOOR

MANUFACTURER
TISCHLER UND SOHN (USA) LTD.
SIX SUBURBAN AVENUE
STAMFORD, CONNECTICUT 06901
203-674-0600

CONSULTANTS
W. W. SCHAEFER ENGINEERING & CONSULTING, P.A. (CA 6809)
7480 150TH COURT NORTH
PALM BEACH GARDENS, FL 33418
PHONE: 561-744-3424

CERTIFICATION
AUG 21 2012
WARREN W. SCHAEFER, P.E.
P.E. NO. 44135

DRAWING NO. 1755
REV.
SHEET NO. 25 OF 32

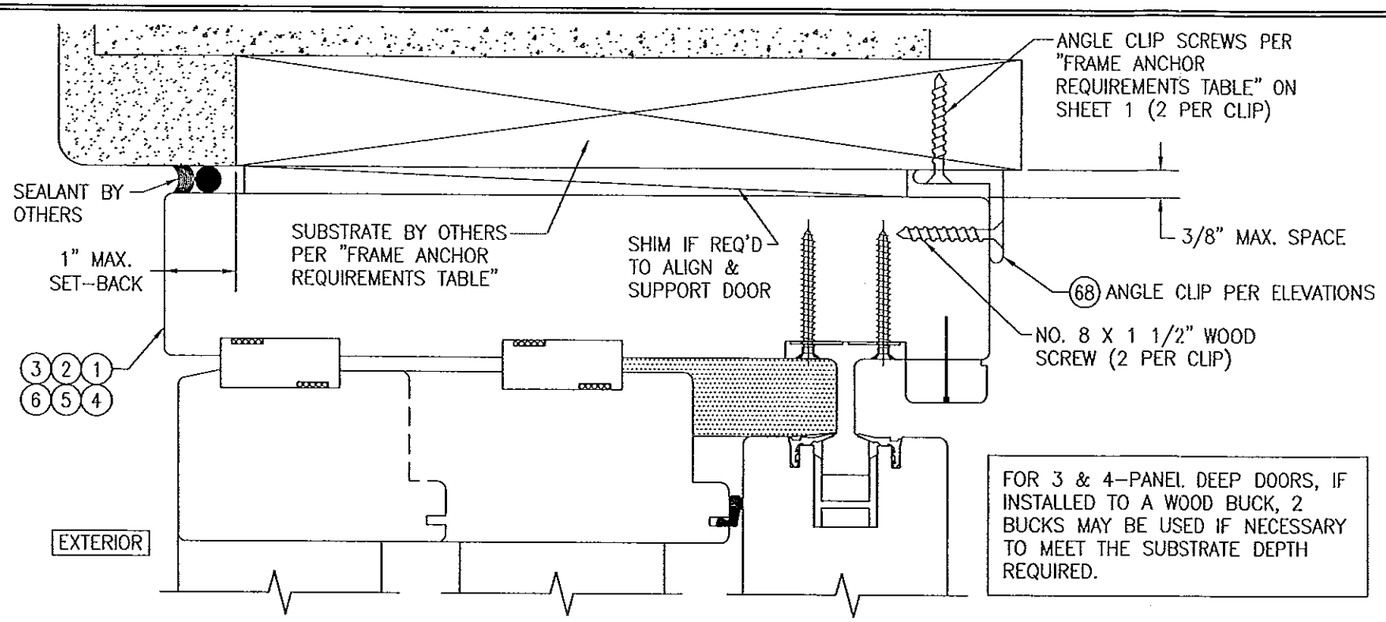

FOR 3 & 4-PANEL DEEP DOORS, IF INSTALLED TO A WOOD BUCK, 2 BUCKS MAY BE USED IF NECESSARY TO MEET THE SUBSTRATE DEPTH REQUIRED.

OPTIONAL ANGLE CLIP INSTALLATION DETAIL
(ANGLE LEG TURNED IN & SHEAR CONNECTED TO SUBSTRATE)

(HEAD SECTION SHOWN, SIDES & SILL ARE INSTALLED THE SAME)
(FOR DETAIL NOT SHOWN, SEE OTHER SECTIONS)
(3-PANEL DEEP DOOR SHOWN. ALL OTHER DEPTH DOORS ALSO APPLY.)

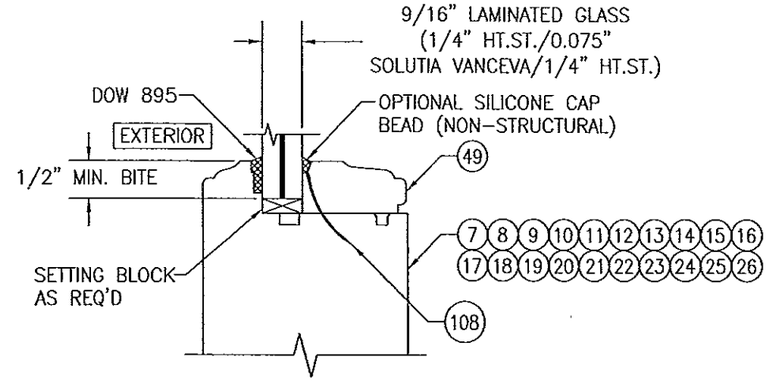

TYPICAL GLAZING DETAIL
(NON-I.G. CONDITION)

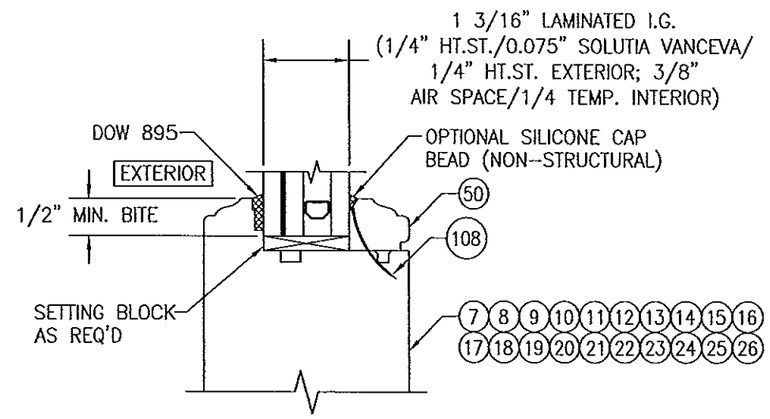

TYPICAL GLAZING DETAIL
(I.G. CONDITION)

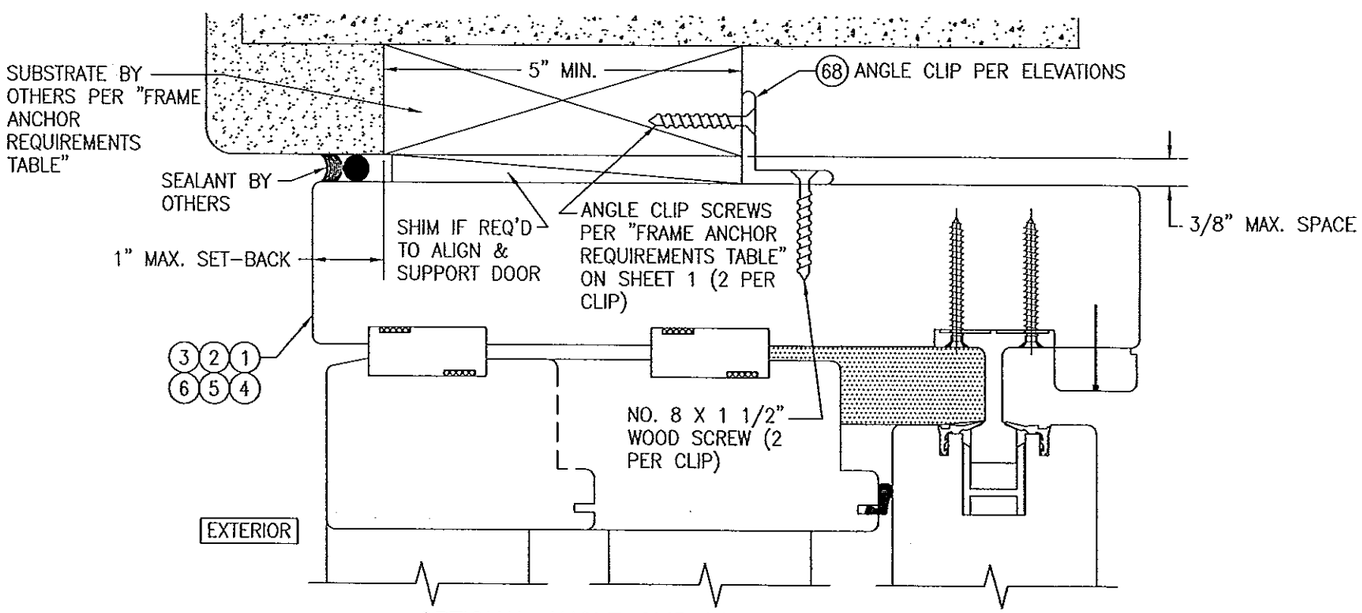

OPTIONAL ANGLE CLIP INSTALLATION DETAIL
(ANGLE LEG TURNED OUT & FACE CONNECTED TO SUBSTRATE)

(HEAD SECTION SHOWN, SIDES & SILL ARE INSTALLED THE SAME)
(FOR DETAIL NOT SHOWN, SEE OTHER SECTIONS)
(3-PANEL DEEP DOOR SHOWN. ALL OTHER DEPTH DOORS ALSO APPLY.)

PRODUCT REVISED
as complying with the Florida
Building Code
Acceptance No 14-0428.14
Expiration Date 09/13/2017
By
Miami Dade Product Control

Approved as complying with the
Florida Building Code
Date 09/13/2012
NOA# 12-0516.08
Miami Dade Product Control
By

WARREN W. SCHAEFER LICENSE No. 44135 STATE OF FLORIDA PROFESSIONAL ENGINEER

DRAWN BY: W.R.M.	CHECKED BY: W.W.S.
PLOT: 1=2	DATE: 03/29/12

NO.	REVISION DESCRIPTION	BY	DATE

DRAWING TITLE
WOOD IMPACT LIFT & SLIDE DOOR

MANUFACTURER
TISCHLER UND SOHN (USA) LTD.
SIX SUBURBAN AVENUE
STAMFORD, CONNECTICUT 06901
203-674-0600

CONSULTANTS
W. W. SCHAEFER ENGINEERING & CONSULTING, P.A. (CA 6809)
7480 150TH COURT NORTH
PALM BEACH GARDENS, FL 33418
PHONE: 561-744-3424

CERTIFICATION
AUG 21 2012
WARREN W. SCHAEFER, P.E.
P.E. NO. 44135

DRAWING NO. 1755
REV.
SHEET NO. 26 OF 32

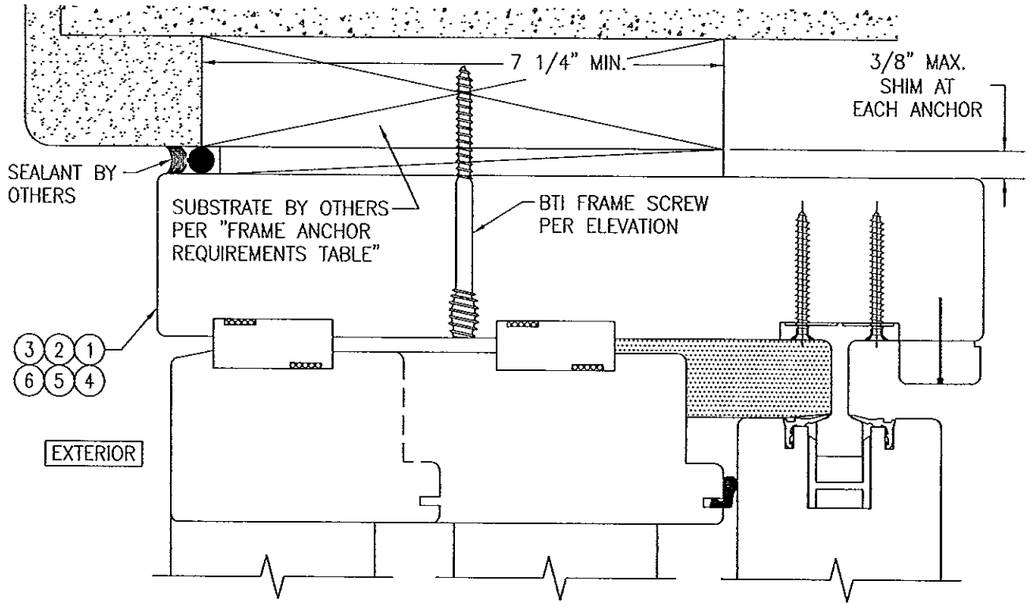

OPTIONAL BTI SCREW INSTALLATION DETAIL

(HEAD SECTION SHOWN, SIDES & SILL ARE SIMILAR.)
(FOR DETAIL NOT SHOWN, SEE OTHER SECTIONS. BTI INSTALL IS THE SAME AS FRAME SCREW INSTALL SHOWN IN THE SECTIONS.)
(3-PANEL DEEP DOOR SHOWN. ALL OTHER DEPTH DOORS ALSO APPLY.)

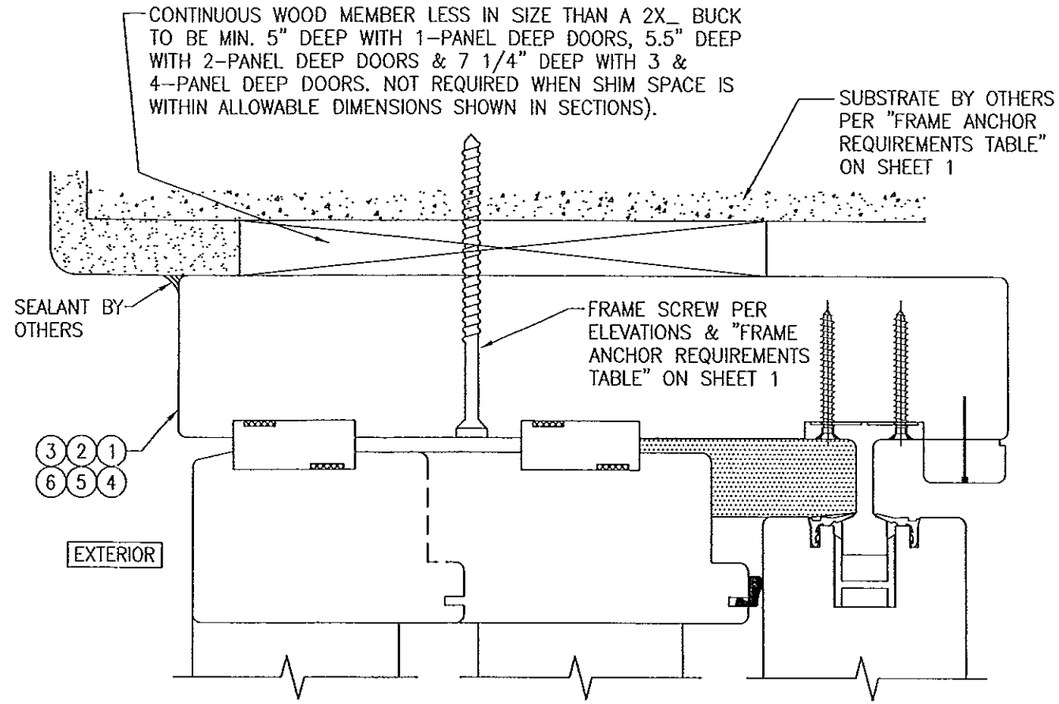

OPTIONAL DIRECT MOUNT DETAIL TO SUBSTRATE WITH SPACER

(HEAD SECTION SHOWN, SIDES & SILL ARE INSTALLED THE SAME)
(FOR DETAIL NOT SHOWN, SEE OTHER SECTIONS)

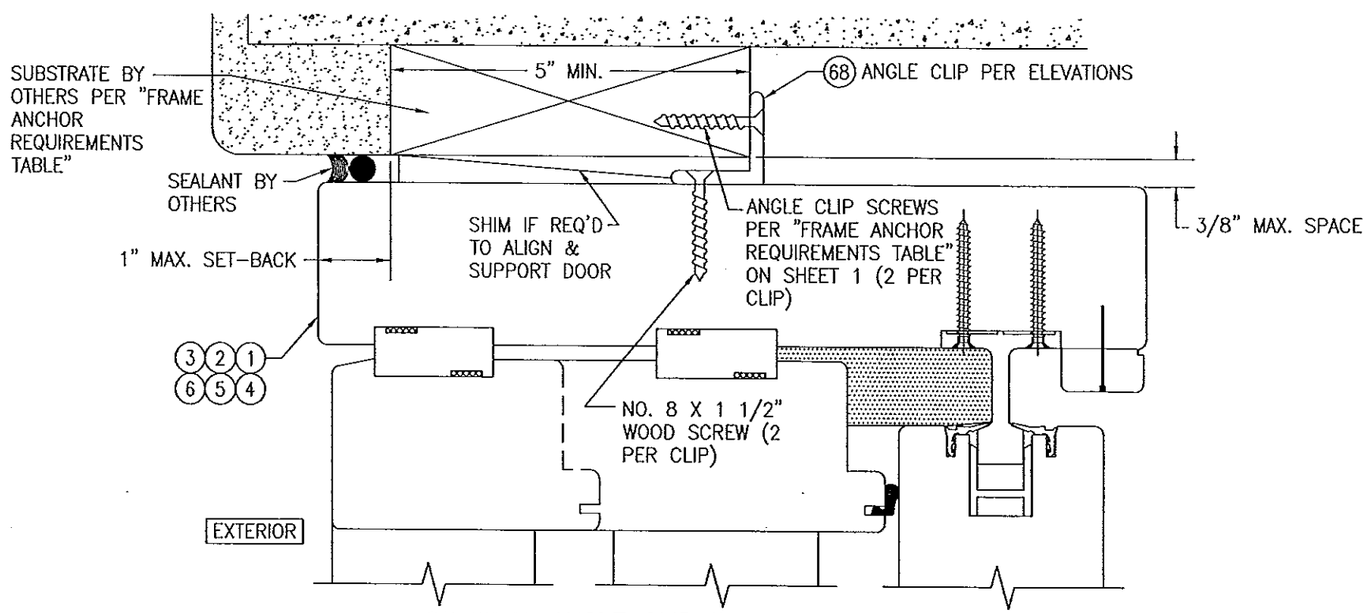

OPTIONAL ANGLE CLIP INSTALLATION DETAIL (ANGLE LEG TURNED IN & FACE CONNECTED TO SUBSTRATE)

(HEAD SECTION SHOWN, SIDES & SILL ARE INSTALLED THE SAME)
(FOR DETAIL NOT SHOWN, SEE OTHER SECTIONS)
(3-PANEL DEEP DOOR SHOWN. ALL OTHER DEPTH DOORS ALSO APPLY.)

PRODUCT REVISED
as complying with the Florida Building Code
Acceptance No 14-0428.14
Expiration Date 09/13/2017
By
Miami Dade Product Control

Approved as complying with the Florida Building Code
Date 9/13/2012
NOA# 12-0516.08
Miami Dade Product Control
By

WARREN W. SCHAEFER LICENSE No. 44135 STATE OF FLORIDA PROFESSIONAL ENGINEER

NO.	REVISION DESCRIPTION	BY	DATE

DRAWN BY: W.R.M. | CHECKED BY: W.W.S.
PLOT: 1=2 | DATE: 03/29/12

DRAWING TITLE: WOOD IMPACT LIFT & SLIDE DOOR

MANUFACTURER: TISCHLER UND SOHN (USA) LTD.
SIX SUBURBAN AVENUE
STAMFORD, CONNECTICUT 06901
203-674-0600

CONSULTANTS: W. W. SCHAEFER ENGINEERING & CONSULTING, P.A. (CA 6809)
7480 150TH COURT NORTH
PALM BEACH GARDENS, FL 33418
PHONE: 561-744-3424

CERTIFICATION
AUG 21 2012
WARREN W. SCHAEFER, P.E.
P.E. NO. 44135

DRAWING NO. 1755 | REV.
SHEET NO. 27 OF 32

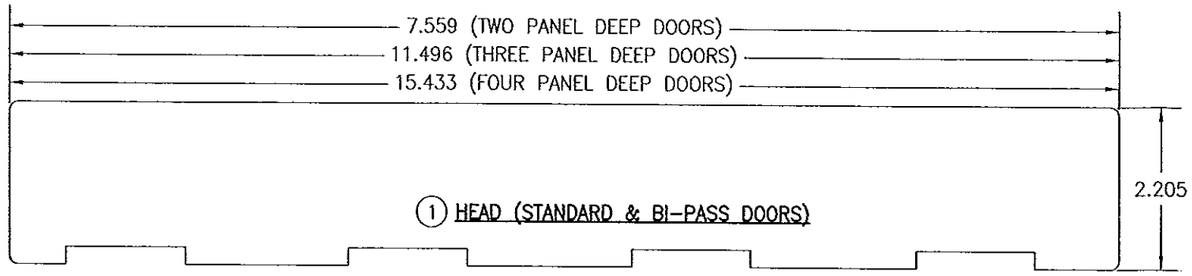

1 HEAD (STANDARD & BI-PASS DOORS)

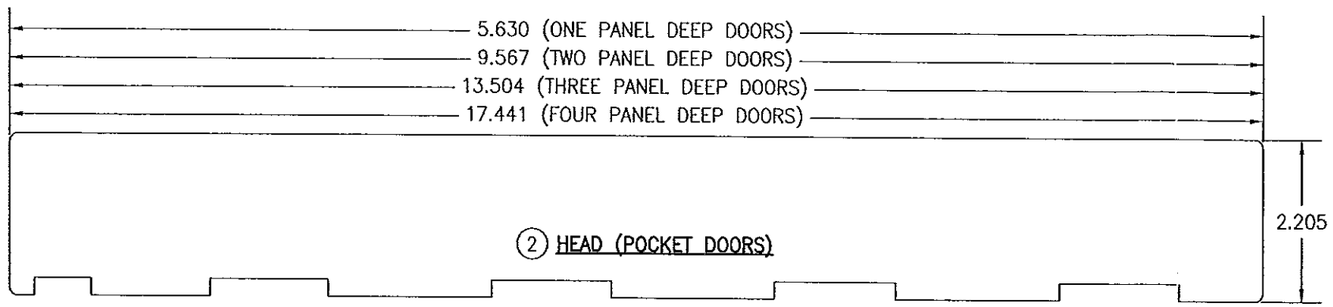

2 HEAD (POCKET DOORS)

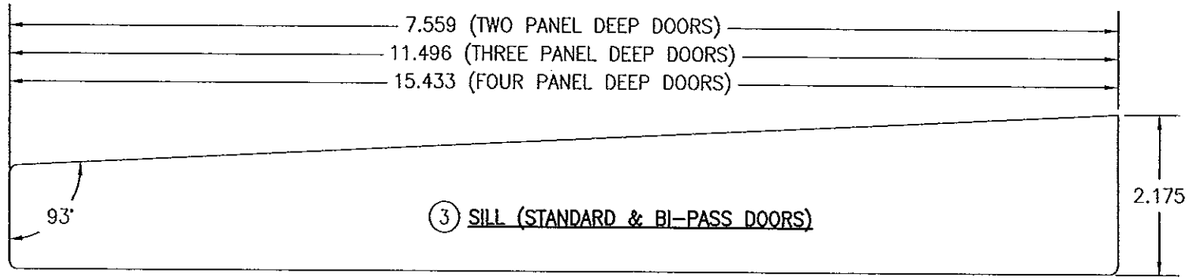

3 SILL (STANDARD & BI-PASS DOORS)

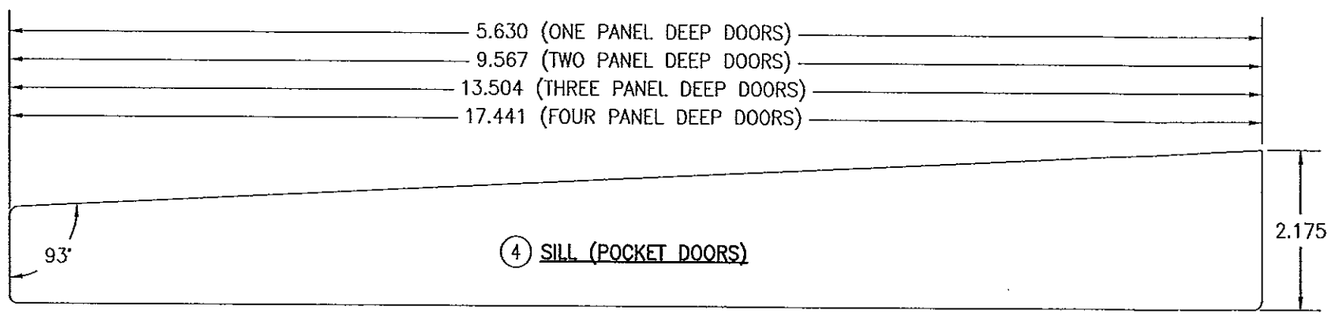

4 SILL (POCKET DOORS)

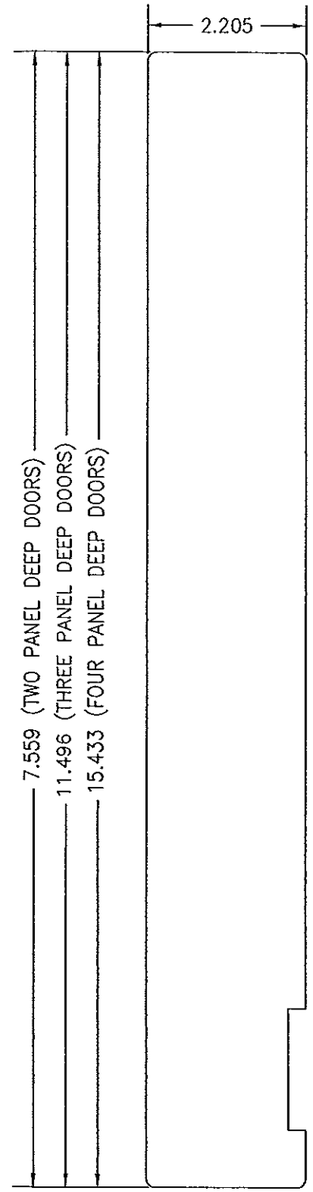

5 JAMB (STANDARD & BI-PASS DOORS)

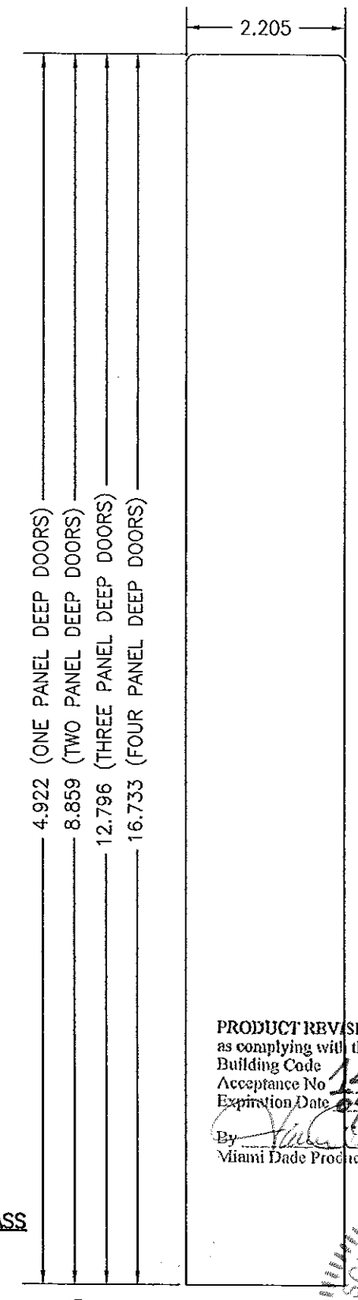

6 JAMB (POCKET DOORS)

PRODUCT REVISED
as complying with the Florida
Building Code
Acceptance No 14-0428.14
Expiration Date 09/13/2017
By
Miami Dade Product Control

Approved as complying with the
Florida Building Code
Date 09/13/2012
NOA# 12-0516.08
Miami Dade Product Control
By

WARREN W. SCHAEFER LICENSE NO. 44135 STATE OF FLORIDA PROFESSIONAL ENGINEER

DRAWN BY: W.R.M.	CHECKED BY: W.W.S.
PLOT: 1=2	DATE: 03/29/12

NO.	REVISION DESCRIPTION	BY	DATE

DRAWING TITLE
WOOD IMPACT LIFT & SLIDE DOOR

MANUFACTURER
TISCHLER UND SOHN (USA) LTD.
SIX SUBURBAN AVENUE
STAMFORD, CONNECTICUT 06901
203-674-0600

CONSULTANTS
W. W. SCHAEFER ENGINEERING & CONSULTING, P.A. (CA 6809)
7480 150TH COURT NORTH
PALM BEACH GARDENS, FL 33418
PHONE: 561-744-3424

CERTIFICATION
AUG 21 2012
WARREN W. SCHAEFER, P.E.
P.E. NO. 44135

DRAWING NO. 1755
REV.

SHEET NO. 28 OF 32

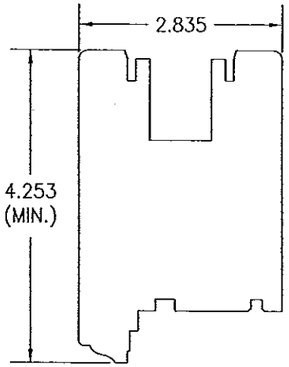

(7) TOP RAIL (OPERABLE PANEL)

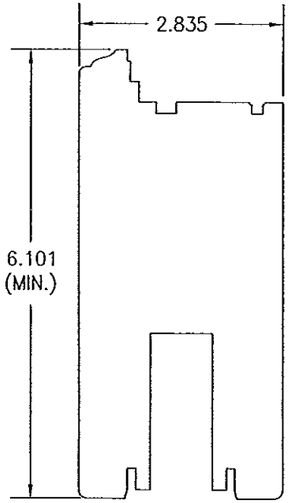

(8) BOTTOM RAIL (OPERABLE PANEL)

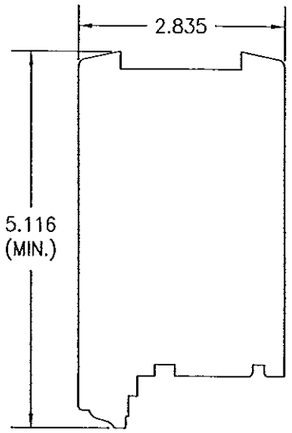

(9) TOP RAIL (FIXED PANEL)

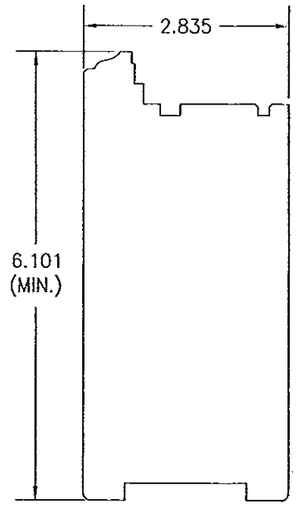

(10) BOTTOM RAIL (FIXED PANEL)

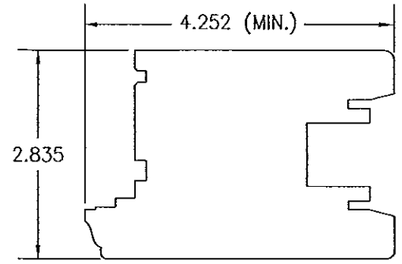

(11) JAMB STILE (OPERABLE PANEL)

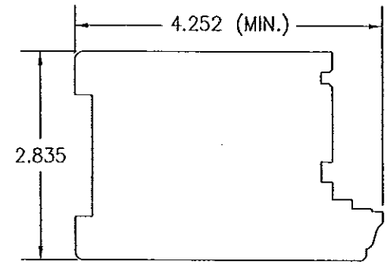

(12) JAMB STILE (FIXED PANEL)

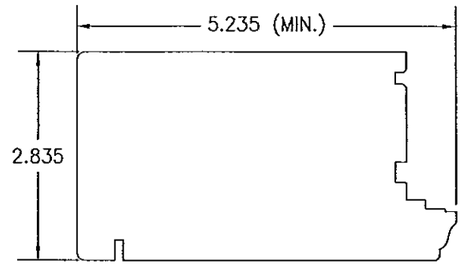

(13) POCKET STILE (ONE PANEL DEEP DOOR)

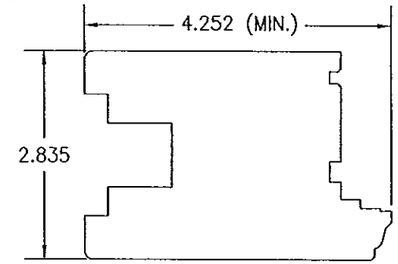

(14) POCKET STILE (TWO, THREE & FOUR PANEL DEEP DOOR)

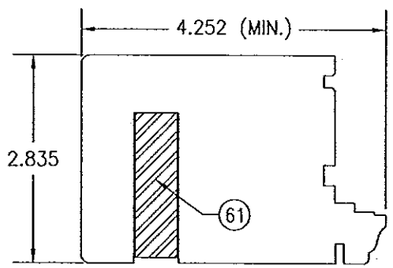

(15) INTERIOR INTERLOCK STILE (USED WITH PANEL HEIGHTS OVER 114 1/8")

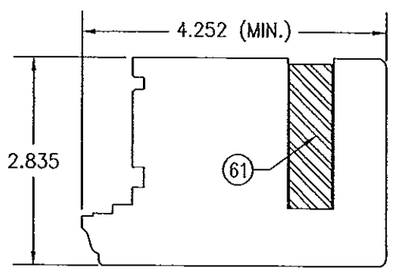

(16) EXTERIOR INTERLOCK STILE (USED WITH PANEL HEIGHTS OVER 114 1/8")

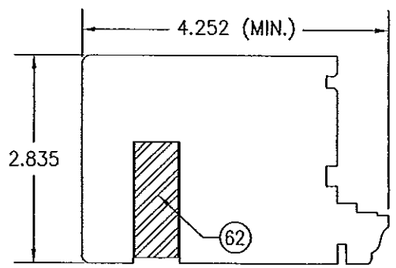

(17) INTERIOR INTERLOCK STILE (USED WITH PANEL HEIGHTS OF 114 1/8" & LESS)

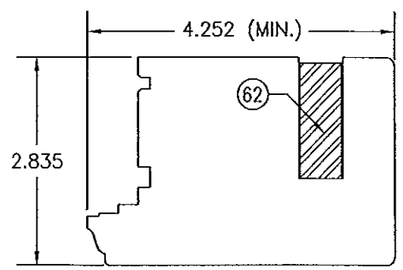

(18) EXTERIOR INTERLOCK STILE (USED WITH PANEL HEIGHTS OF 114 1/8" & LESS)

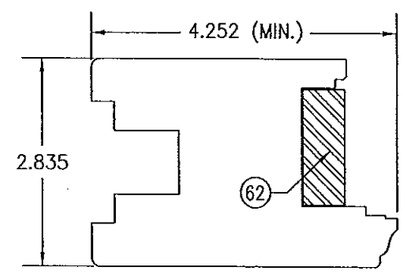

(19) INTERIOR INTERLOCK STILE (USED WITH ALL PANEL HEIGHTS)

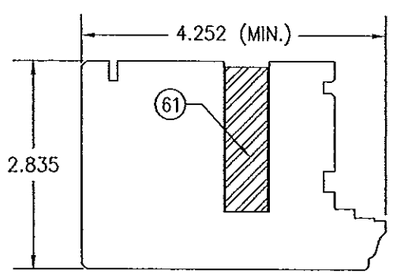

(20) EXTERIOR INTERLOCK STILE (USED WITH PANEL HEIGHTS OVER 114 1/8")

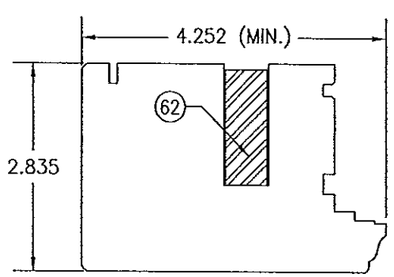

(21) EXTERIOR INTERLOCK STILE (USED WITH PANEL HEIGHTS OF 114 1/8" & LESS)

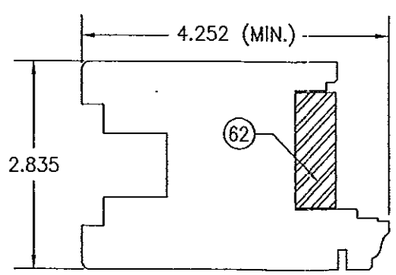

(22) INTERIOR INTERLOCK STILE (USED WITH ALL PANEL HEIGHTS)

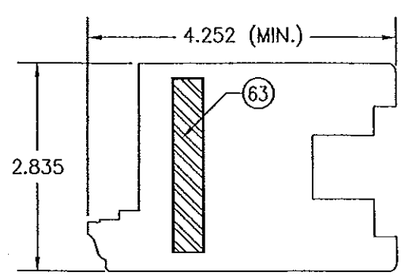

(23) INACTIVE MEETING STILE (USED WITH PANEL HEIGHTS OVER 114 1/8")

PRODUCT REVISED
as complying with the Florida
Building Code
Acceptance No 14-0428.14
Expiration Date 09/13/2017
By
Miami Dade Product Control

WARREN W. SCHAEFER LICENSE No. 44135 STATE OF FLORIDA PROFESSIONAL ENGINEER

Approved as complying with the
Florida Building Code
Date 09/13/2012
NOA# 12-0516.08
Miami Dade Product Control
By

DRAWN BY: W.R.M.	CHECKED BY: W.W.S.
PLOT: 1=2	DATE: 03/29/12

NO.	REVISION DESCRIPTION	BY	DATE

DRAWING TITLE
WOOD IMPACT LIFT & SLIDE DOOR

MANUFACTURER
TISCHLER UND SOHN (USA) LTD.
SIX SUBURBAN AVENUE
STAMFORD, CONNECTICUT 06901
203-674-0600

CONSULTANTS
W. W. SCHAEFER ENGINEERING & CONSULTING, P.A. (CA 6809)
7480 150TH COURT NORTH
PALM BEACH GARDENS, FL 33418
PHONE: 561-744-3424

CERTIFICATION
AUG 21 2012
WARREN W. SCHAEFER, P.E.
P.E. NO. 44135

DRAWING NO. 1755
REV.

SHEET NO. 29 OF 32

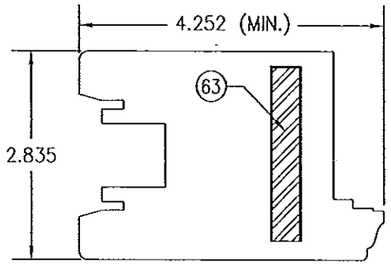

(24) ACTIVE MEETING STILE (USED WITH PANEL HEIGHTS OVER 114 1/8")

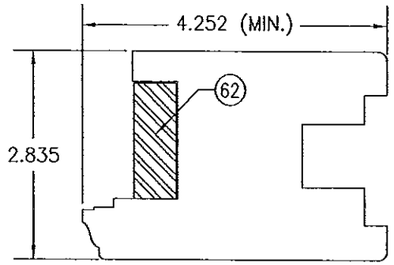

(25) INACTIVE MEETING STILE (USED WITH PANEL HEIGHTS OF 114 1/8" & LESS)

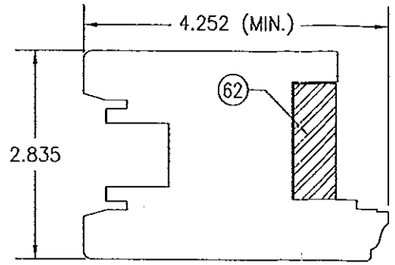

(26) ACTIVE MEETING STILE (USED WITH PANEL HEIGHTS OF 114 1/8" & LESS)

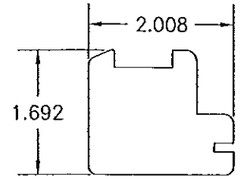

(27) HEADER BLOCKING (USED WITH ONE PANEL DEEP POCKET DOOR)

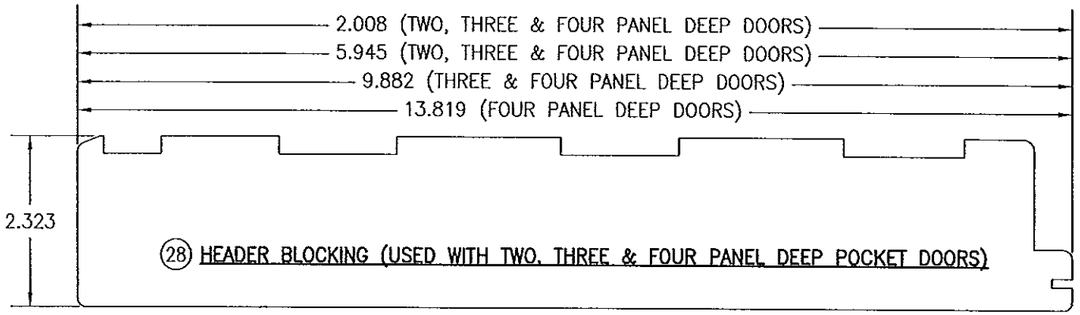

(28) HEADER BLOCKING (USED WITH TWO, THREE & FOUR PANEL DEEP POCKET DOORS)

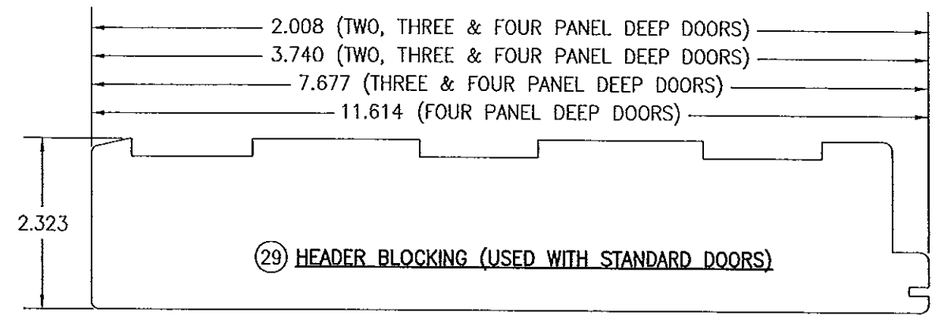

(29) HEADER BLOCKING (USED WITH STANDARD DOORS)

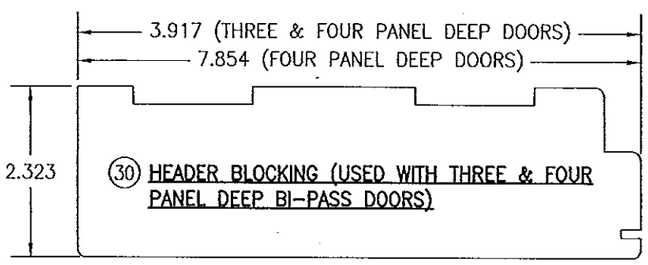

(30) HEADER BLOCKING (USED WITH THREE & FOUR PANEL DEEP BI-PASS DOORS)

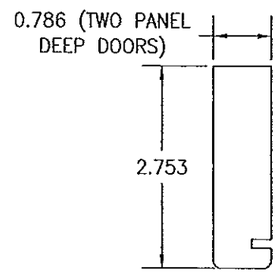

(31) HEADER BLOCKING (USED WITH TWO, THREE & FOUR PANEL DEEP BI-PASS DOORS)

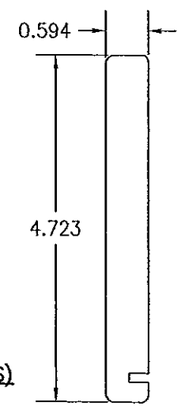

(32) SKIRT BOARD

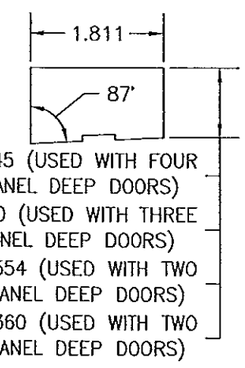

(33) TRACK RISER (OPERABLE DOORS)

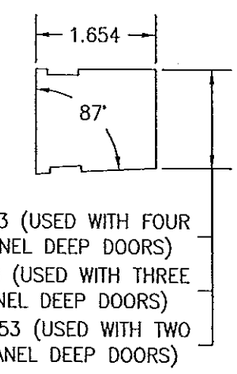

(34) PANEL RISER (FIXED DOORS)

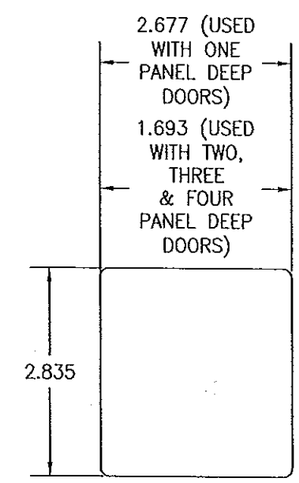

(35) POCKET BUMPER

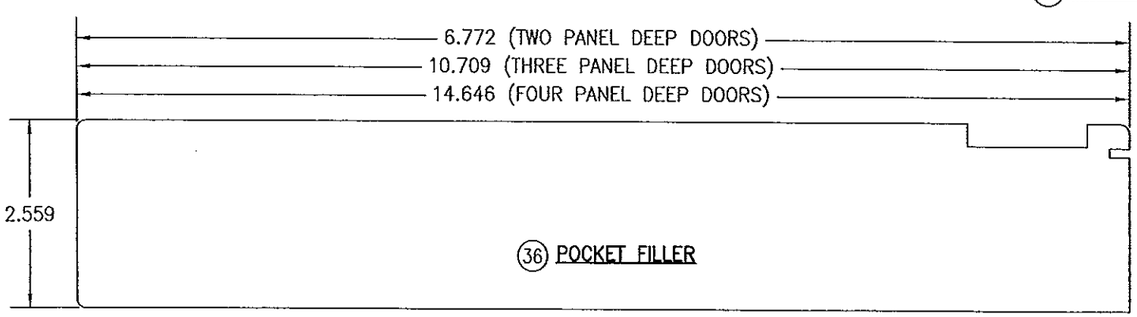

(36) POCKET FILLER

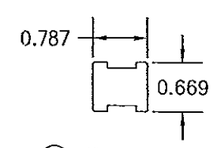

(37) HEADER BLOCKING FILLER

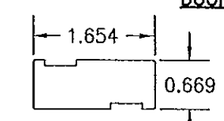

(38) HEADER BLOCKING & PANEL FILLER

PRODUCT REVISED
as complying with the Florida
Building Code
Acceptance No. 14-0428.14
Expiration Date 09/13/2017
By
Miami Dade Product Control

Approved as complying with the
Florida Building Code
Date 09/13/2012
NOA# 12-0516.08
Miami Dade Product Control
By

WARREN W. SCHAEFER ★ ENGINEER ★ LICENSE No. 44135 ★ STATE OF FLORIDA ★ PROFESSIONAL

CERTIFICATION
AUG 21 2012
WARREN W. SCHAEFER, P.E.
P.E. NO. 44135

NO.	REVISION DESCRIPTION	BY	DATE

DRAWN BY: W.R.M.
CHECKED BY: W.W.S.
PLOT: 1=2
DATE: 03/29/12

DRAWING TITLE
WOOD IMPACT LIFT & SLIDE DOOR

MANUFACTURER
TISCHLER UND SOHN (USA) LTD.
SIX SUBURBAN AVENUE
STAMFORD, CONNECTICUT 06901
203-674-0600

CONSULTANTS
W. W. SCHAEFER ENGINEERING & CONSULTING, P.A. (CA 6809)
7480 150TH COURT NORTH
PALM BEACH GARDENS, FL 33418
PHONE: 561-744-3424

DRAWING NO. 1755
REV.
SHEET NO. 30 OF 32

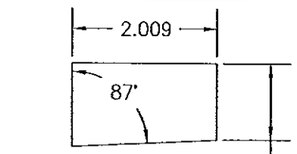

1.035 (USED WITH FOUR PANEL DEEP DOORS)
0.840 (USED WITH THREE PANEL DEEP DOORS)
0.645 (USED WITH TWO PANEL DEEP DOORS)
0.449 (USED WITH ONE PANEL DEEP DOORS)
LENGTH = 3.858

(39) INTERLOCK PAD RISER

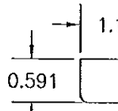

(40) TRIM (HEAD)

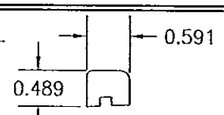

(41) TRIM (SILL)

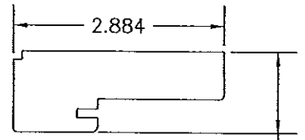

1.102 (USED AT POCKET INTERLOCK)
0.906 (USED AT STANDARD INTERLOCK)

(42) INTERLOCK

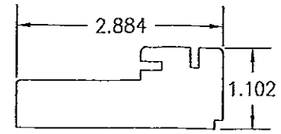

(43) POCKET INTERLOCK

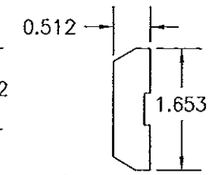

(44) JAMB PANEL FILLER

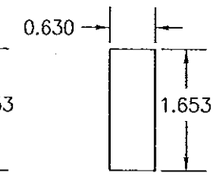

(45) POCKET STILE FILLER

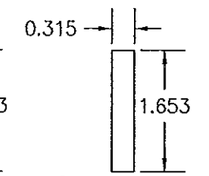

(46) INTERLOCK STILE FILLER

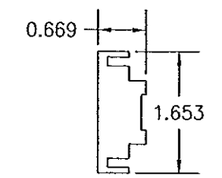

(47) MEETING STILE FILLER

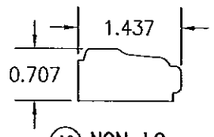

(49) NON-I.G. GLAZING BEAD

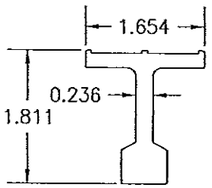

(56) TOP TRACK

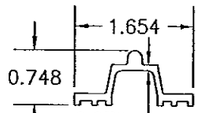

(57) BOTTOM TRACK

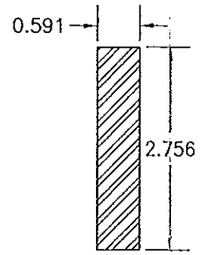

(60) POCKET STILE REINFORCEMENT (USED AT ONE PANEL DEEP DOORS)

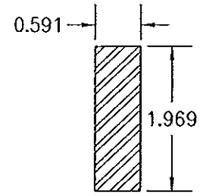

(61) INTERLOCK STILE REINFORCEMENT

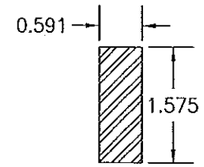

(62) INTERLOCK & MEETING STILE REINFORCEMENT

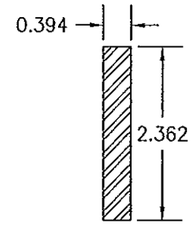

(63) MEETING STILE REINFORCEMENT

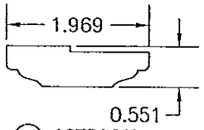

(48) ASTRAGAL

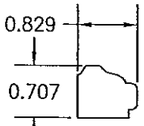

(50) I.G. GLAZING BEAD

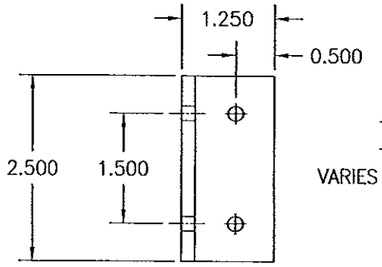

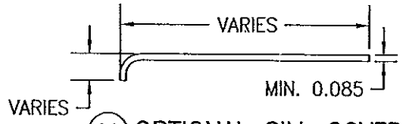

(69) OPTIONAL SILL COVER

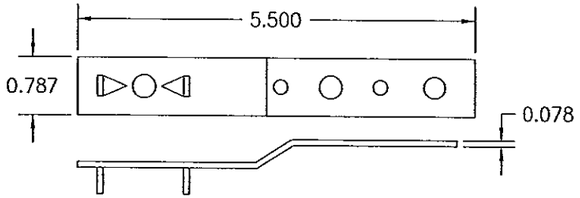

(67) INSTALLATION CLIP

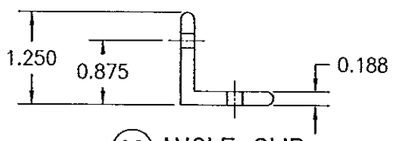

(68) ANGLE CLIP

PRODUCT REVISED
as complying with the Florida
Building Code
Acceptance No 14-0428.14
Expiration Date 09/13/2017
By
Miami Dade Product Control

Approved as complying with the
Florida Building Code
Date 08/13/2012
NOA# 12-0516.08
Miami Dade Product Control
By

WARREN W. SCHAEFER
LICENSE
NO. 44135
STATE OF FLORIDA
PROFESSIONAL ENGINEER

NO.	REVISION DESCRIPTION	BY	DATE

DRAWN BY: W.R.M.
CHECKED BY: W.W.S.
PLOT: 1=2
DATE: 03/29/12

DRAWING TITLE
WOOD IMPACT LIFT & SLIDE DOOR

MANUFACTURER
TISCHLER UND SOHN (USA) LTD.
SIX SUBURBAN AVENUE
STAMFORD, CONNECTICUT 06901
203-674-0600

CONSULTANTS
W. W. SCHAEFER ENGINEERING & CONSULTING, P.A. (CA 6809)
7480 150TH COURT NORTH
PALM BEACH GARDENS, FL 33418
PHONE: 561-744-3424

CERTIFICATION
AUG 21 2012
WARREN W. SCHAEFER, P.E.
P.E. NO. 44135

DRAWING NO. 1755
REV.
SHEET NO. 31 OF 32

ITEM #	ITEM DESCRIPTION	MANUFACTURER/NOTES
	PARTS	
1	HEAD (STANDARD & BI-PASS DOORS)	WOOD
2	HEAD (POCKET DOORS)	WOOD
3	SILL (STANDARD & BI-PASS DOORS)	WOOD
4	SILL (POCKET DOORS)	WOOD
5	JAMB (STANDARD & BI-PASS DOORS)	WOOD
6	JAMB (POCKET DOORS)	WOOD
7	TOP RAIL (OPERABLE PANEL)	WOOD
8	BOTTOM RAIL (OPERABLE PANEL)	WOOD
9	TOP RAIL (FIXED PANEL)	WOOD
10	BOTTOM RAIL (FIXED PANEL)	WOOD
11	JAMB STILE (OPERABLE PANEL)	WOOD
12	JAMB STILE (FIXED PANEL)	WOOD
13	POCKET STILE (ONE PANEL DEEP DOOR)	WOOD
14	POCKET STILE (TWO, THREE & FOUR PANEL DEEP DOOR)	WOOD
15	INTERIOR INTERLOCK STILE (USED WITH PANEL HEIGHTS OVER 114 1/8")	WOOD
16	EXTERIOR INTERLOCK STILE (USED WITH PANEL HEIGHTS OVER 114 1/8")	WOOD
17	INTERIOR INTERLOCK STILE (USED WITH PANEL HEIGHTS 114 1/8" & LESS)	WOOD
18	EXTERIOR INTERLOCK STILE (USED WITH PANEL HEIGHTS 114 1/8" & LESS)	WOOD
19	INTERIOR INTERLOCK STILE (USED WITH ALL PANEL HEIGHTS)	WOOD
20	EXTERIOR INTERLOCK STILE (USED WITH PANEL HEIGHTS OVER 114 1/8")	WOOD
21	EXTERIOR INTERLOCK STILE (USED WITH PANEL HEIGHTS 114 1/8" & LESS)	WOOD
22	INTERIOR INTERLOCK STILE (USED WITH ALL PANEL HEIGHTS)	WOOD
23	INACTIVE MEETING STILE (USED WITH PANEL HEIGHTS OVER 114 1/8")	WOOD
24	ACTIVE MEETING STILE (USED WITH PANEL HEIGHTS OVER 114 1/8")	WOOD
25	INACTIVE MEETING STILE STILE (USED WITH PANEL HEIGHTS 114 1/8" & LESS)	WOOD
26	ACTIVE MEETING STILE STILE (USED WITH PANEL HEIGHTS 114 1/8" & LESS)	WOOD
27	HEADER BLOCKING (USED WITH ONE PANEL DEEP POCKET DOOR)	WOOD
28	HEADER BLOCKING (USED WITH TWO, THREE & FOUR PANEL DEEP POCKET DOORS)	WOOD
29	HEADER BLOCKING (USED WITH STANDARD DOORS)	WOOD
30	HEADER BLOCKING (USED WITH THREE & FOUR PANEL DEEP BI-PASS DOORS)	WOOD
31	HEADER BLOCKING (USED WITH TWO, THREE & FOUR PANEL DEEP BI-PASS DOORS)	WOOD
32	SKIRT BOARD (USED WITH BI-PASS DOORS)	WOOD
33	TRACK RISER (OPERABLE DOORS)	WOOD
34	PANEL RISER (FIXED DOORS)	WOOD
35	POCKET BUMPER	WOOD
36	POCKET FILLER	WOOD
37	HEADER BLOCKING FILLER	WOOD
38	HEADER BLOCKING & PANEL FILLER	WOOD
39	INTERLOCK PAD RISER	WOOD
40	TRIM (HEAD)	WOOD
41	TRIM (SILL)	WOOD
42	INTERLOCK	WOOD
43	POCKET INTERLOCK	WOOD
44	JAMB PANEL FILLER	WOOD

ITEM #	ITEM DESCRIPTION	MANUFACTURER/NOTES
	PARTS	
45	POCKET STILE FILLER	WOOD
46	INTERLOCK STILE FILLER	WOOD
47	MEETING STILE FILLER	WOOD
48	ASTRAGAL	WOOD
49	NON-I.G. GLAZING BEAD	WOOD
50	I.G. GLAZING BEAD	WOOD
51	POCKET SHEATHING	MIN. 0.709" THICK SAPELI MARINE GRADE PLYWOOD
56	TOP TRACK	6063-T5 ALUMINUM
57	BOTTOM TRACK	6063-T5 ALUMINUM
60	POCKET STILE REINFORCEMENT (USED AT AT ONE PANEL DEEP DOORS)	37 KSI STAINLESS STEEL OR A36 STEEL
61	INTERLOCK STILE REINFORCEMENT	35 KSI STAINLESS STEEL OR A36 STEEL
62	INTERLOCK & MEETING STILE REINFORCEMENT	34 KSI STAINLESS STEEL OR A36 STEEL
63	INTERLOCK STILE REINFORCEMENT	34 KSI STAINLESS STEEL OR A36 STEEL
64	MEETING STILE REINFORCEMENT	36 KSI STAINLESS STEEL OR A36 STEEL
67	INSTALLATION CLIP	54 KSI GALVANIZED STEEL
68	ANGLE CLIP	6061-T6 ALUMINUM
69	OPTIONAL SILL COVER	ALUMINUM, COPPER OR BRONZE
	HARDWARE	
75	TOP TRACK GUIDE	SIEGENIA PFZB 0020
76	LIFT LOCKING GEAR	SIEGENIA HS-300
77	INTERLOCK PLATES (USED WITH INTERLOCK & POCKET INTERLOCK PANEL HEIGHTS OVER 114 1/8")	GU K-11864-00-01 PLUS GU K-15567-00-01
78	INTERLOCK PLATES (USED WITH INTERLOCK & POCKET INTERLOCK PANEL HEIGHTS 114 1/8" & LESS)	GU K-11864-00-01
79	LOCKING BOLT (AT JAMB)	SUPPLIED WITH SIEGENIA, GU OR FFI HARDWARE
80	LOCKING BOLT (AT MEETING STILE)	SUPPLIED WITH SIEGENIA, GU OR FFI HARDWARE
81	HANDLE	AS REQ'D TO ACTUATE LIFT LOCKING GEAR
82	PULL GRIP	AS REQ'D
83	BUMPER	AS REQ'D
	SEALS & SEALANTS	
87	PRE-COMPRESSED TAPE	ILLBRUCK TP600 ILLMOD600 10/2 OR EQUIVALENT
88	TOP SEALING BRIDGE	SUPPLIED WITH SIEGENIA, GU OR FFI HARDWARE
89	WEATHERSTRIP	SCHLEGEL QL3004
90	WEATHERSTRIP	SIEGENIA HH0134-01
91	BULB WEATHERSTRIP	SIEGENIA HH0134-02
92	PRE-COMPRESSED TAPE	ILLBRUCK TP600 ILLMOD600 10/2 OR EQUIVALENT
93	BOTTOM SEALING BRIDGE	WEGNER 0.236 X 3.858 NEOPRENE CR 6086.130
94	SILICONE	DOW 794 OR EQUIVALENT
95	PRE-COMPRESSED TAPE	ILLBRUCK TP600 ILLMOD600 10/2 OR EQUIVALENT
96	WOOD GLUE	HENKEL PONAL SUPER 3
	FASTENERS	
100	NO. 10 X 2" SMS OR WOOD SCREW	WITHIN 4" FROM ENDS & 10" MAX. O.C.
101	NO. 8 X 2" SMS OR WOOD SCREW	WITHIN 4" FROM ENDS & 14" MAX. O.C.
102	18 GA. X 1 1/2" S.S. CURVED NAIL	WITHIN 4" FROM CORNERS & 12" MAX. O.C.
103	NO. 10 X 2" SMS OR WOOD SCREW	WITHIN 4" FROM ENDS & 10" MAX. O.C.
104	NO. 14 X 4 3/4" BAUTEC WOOD SCREW	WITHIN 6" FROM ENDS & 16" MAX. O.C.
105	NO. 8 X 1 1/2" SMS OR WOOD SCREW	WITHIN 4" FROM ENDS & 12" MAX. O.C.
106	NO. 14 X 6 1/4" SMS OR WOOD SCREW	WITHIN 4" FROM CORNERS & 12" MAX. O.C.
107	NO. 10 X 3 1/2" SMS OR WOOD SCREW	WITHIN 4" FROM ENDS & 16" MAX. O.C.
108	18 GA. X 1 1/2" S.S. CURVED NAIL	WITHIN 4" FROM CORNERS & 12" MAX. O.C.
109	NO. 8 X 1 3/4" SMS OR WOOD SCREW	WITHIN 4" FROM CORNERS & 12" MAX. O.C.
110	NO. 8 X 3 1/2" SMS OR WOOD SCREW	WITHIN 4" FROM CORNERS & 12" MAX. O.C.

NOTE: WOOD USED IN TESTING WAS SIPO MAHOGANY WITH A SPECIFIC GRAVITY OF G = 0.62 AND A MODULUS OF ELASTICITY OF E = 1,6000,000 PSI. OTHER WOOD SPECIES APPLICABLE FOR USE WITH THIS PRODUCT ARE THOSE WITH A SPECIFIC GRAVITY OF 0.62 AND MODULUS OF ELASTICITY OF 1,600,000 PSI OR GREATER. ALL WOOD IS MINIMUM GRADE 2 MILLED BY TISCHLER UND SOHN TO SELECT.

PRODUCT REVISED
~~as complying with the Florida~~
Building Code
Acceptance No 14-0428.14
Expiration Date 09/13/2017
By
Miami Dade Product Control

~~Approved~~ as complying with the
Florida Building Code
Date 09/22/2012
NOA# 12-0516.08
Miami Dade Product Control
By

AUG 21 2012

WARREN W. SCHAEFER LICENSE No. 44135 STATE OF FLORIDA PROFESSIONAL ENGINEER

DRAWN BY: W.R.M.	CHECKED BY: W.W.S.
PLOT: 1=2	DATE: 03/29/12

NO.	REVISION DESCRIPTION	BY	DATE

DRAWING TITLE
WOOD IMPACT LIFT & SLIDE DOOR

MANUFACTURER
TISCHLER UND SOHN (USA) LTD.
SIX SUBURBAN AVENUE
STAMFORD, CONNECTICUT 06901
203-674-0600

CONSULTANTS
W. W. SCHAEFER ENGINEERING & CONSULTING, P.A. (CA 6809)
7480 150TH COURT NORTH
PALM BEACH GARDENS, FL 33418
PHONE: 561-744-3424

CERTIFICATION
STATE OF FLORIDA
AUG 21 2012
WARREN W. SCHAEFER, P.E.
P.E. NO. 44135

DRAWING NO. 1755
REV.
SHEET NO. 32 OF 32