MIAMI-DADE COUNTY
PRODUCT CONTROL SECTION
11805 SW 26 Street, Room 208
Miami, Florida 33175-2474
T (786) 315-2590 F (786) 315-2599
www.miamidade.gov/economy

DEPARTMENT OF REGULATORY AND ECONOMIC RESOURCES (RER)
BOARD AND CODE ADMINISTRATION DIVISION

# NOTICE OF ACCEPTANCE (NOA)

**Peetz Windows and Doors, Inc.**
**15951 S.W. 41 Street, Suite 150**
**Weston, FL 33331**

**SCOPE:**

This NOA is being issued under the applicable rules and regulations governing the use of construction materials. The documentation submitted has been reviewed and accepted by Miami-Dade County RER - Product Control Section to be used in Miami Dade County and other areas where allowed by the Authority Having Jurisdiction (AHJ).

This NOA shall not be valid after the expiration date stated below. The Miami-Dade County Product Control Section (In Miami Dade County) and/or the AHJ (in areas other than Miami Dade County) reserve the right to have this product or material tested for quality assurance purposes. If this product or material fails to perform in the accepted manner, the manufacturer will incur the expense of such testing and the AHJ may immediately revoke, modify, or suspend the use of such product or material within their jurisdiction. RER reserves the right to revoke this acceptance, if it is determined by Miami-Dade County Product Control Section that this product or material fails to meet the requirements of the applicable building code.

This product is approved as described herein, and has been designed to comply with the Florida Building Code, including the High Velocity Hurricane Zone.

**DESCRIPTION: Series "Lift & Slide Bronze Clad" Wood Sliding Glass Doors – L.M.I.**

**APPROVAL DOCUMENT:** Drawing No. **1632 Rev B**, titled "Lift & Slide Bronze Clad Sliding Glass Impact Doors", sheets 1 through 38 of 38, dated 10/19/11 and last revised on NOV 06, 2013, prepared by W. W. Schafer Engineering & Consulting, P. A., signed and sealed by Warren W. Schafer, P. E., bearing the Miami-Dade County Product Control Revision stamp with the Notice of Acceptance number and Expiration date by the Miami-Dade County Product Control Section.

**MISSILE IMPACT RATING: Large and Small Missile Impact Resistant**

**Limitations:**

1. See sheet 1 for locking points quantity requirements for hardware item #**78** (FFI #255JH or GU-934 mechanism), any of the locking bolt item #**83** (GU or FFI #LAR 25000012 secured w/ 3/16"X 3-1/8 screws or Hautau part # 184695) may be used. See the locking bolt item #**83** (Hautau part # **184695**) quantity requirements for Hardware item #**79** (Hautau HS-300 or 300-E mechanism).
2. Electrical device is not part of this approval and must be reviewed by corresponding Building Authority. Any cavities for electrical device must fit in within tested cavities per test.
3. See Sheet 12 for **90$^0$** corner SGD. This condition is approved with Flush mount Sill only (see details sheets 28 thru 32). Flush Sill mount requires two (2) locking item #130 per operable panel. Also anchor clip mounting condition is not applicable with Flush Mount sill.
4. See glazing details in sheet 24. The max frame height with glass option 3 & 5 are 134-1/16" and the Frame height with glass option 1, 2 & 4 are limited to 98-1/16" max. The max allowable sash (panel) width= 62-7/16" and the max panel height=129". Doors must comply with min height and width per FBC requirements.
5. The frame area of alternate size unit shall not exceed the frame area of the tested approved unit per FBC 2411.3.2.4 (i) (1).

**LABELING:** Each unit shall bear a permanent label with the manufacturer's name or logo, Kall/Eifel, Germany and series and following statement: "Miami-Dade County Product Control Approved" noted herein.

MIAMI-DADE COUNTY APPROVED

7/15/14

MIAMI-DADE COUNTY
PRODUCT CONTROL SECTION
11805 SW 26 Street, Room 208
Miami, Florida 33175-2474
T (786) 315-2590 F (786) 315-2599
www.miamidade.gov/economy

DEPARTMENT OF REGULATORY AND ECONOMIC RESOURCES (RER)
BOARD AND CODE ADMINISTRATION DIVISION

# NOTICE OF ACCEPTANCE (NOA)

**Peetz Windows and Doors, Inc.**
**15951 S.W. 41 Street, Suite 150**
**Weston, FL 33331**

**TERMINATION** of this NOA will occur after the expiration date or if there has been a revision or change in the materials, use, and/or manufacture of the product or process. Misuse of this NOA as an endorsement of any product, for sales, advertising or any other purposes shall automatically terminate this NOA. Failure to comply with any section of this NOA shall be cause for termination and removal of NOA.

**ADVERTISEMENT:** The NOA number preceded by the words Miami-Dade County, Florida, and followed by the expiration date may be displayed in advertising literature. If any portion of the NOA is displayed, then it shall be done in its entirety.

**INSPECTION:** A copy of this entire NOA shall be provided to the user by the manufacturer or its distributors and shall be available for inspection at the job site at the request of the Building Official.

This NOA **revises NOA # 13-0717.10** and consists of the pages 1 &2 and evidence pages E-1 & E-2, as well as approval document mentioned above.

The submitted documentation was reviewed by **Ishaq I. Chanda, P.E.**

MIAMI-DADE COUNTY APPROVED

7/15/14

## NOTICE OF ACCEPTANCE: EVIDENCE SUBMITTED

### A. DRAWINGS

1. Manufacturer's die drawings and sections (Submitted under files # **13-0717.10/ #11-1024.13**)
2. Drawing No. **1632 Rev B**, titled "Lift & Slide Bronze Clad Sliding Glass Impact Doors", sheets 1 through 38 of 38, dated 10/19/11 and last revised on NOV 06, 2013, prepared by W. W. Schafer Engineering & Consulting, P. A., signed and sealed by Warren W. Schafer, P.E.

### B. TESTS

1. Test reports on: 1) Air Infiltration Test, per FBC, TAS 202-94
   2) Uniform Static Air Pressure Test, Loading per FBC TAS 202-94
   3) Water Resistance Test, per FBC, TAS 202-94
   4) Large Missile Impact Test per FBC, TAS 201-94
   5) Cyclic Wind Pressure Loading per FBC, TAS 203-94
   6) Forced Entry Test, per FBC 2411 3.2.1, TAS 202-94

   Along with marked-up drawings and installation diagram of 90 degree Lift and Slide wood glass doors w/ pocket, prepared by Architectural Testing, Test Report No. **B-205.02-450-18**, dated 07/02/2013, signed and sealed by Vinu J. Abraham, P. E.
   (Note: This test report has addendum letter dated Nov 06, 2013, issued by Architectural Testing, signed and sealed by Vinu J. Abraham, P. E.
2. Additional Test reports on: 1) Air Infiltration Test, per FBC, TAS 202-94
   2) Uniform Static Air Pressure Test, Loading per FBC TAS 202-94
   3) Water Resistance Test, per FBC, TAS 202-94
   4) Large Missile Impact Test per FBC, TAS 201-94
   5) Cyclic Wind Pressure Loading per FBC, TAS 203-94
   6) Forced Entry Test, per FBC 2411 3.2.1, TAS 202-94

   Along with marked-up drawings and installation diagram of Lift and Slider with pocket, prepared by Hurricane Test Laboratory, LLC, Test Report No. **HTL–0284–1009–07**, dated 09/29/08, **HTL–0284–0526–03**, dated 03/14/2005, **HTL–0284–1018–04**, dated 03/14/2005, **HTL–0284–1205–04**, dated 03/14/2005, and **HTL–0284–1113–01**, dated 03/14/2005, all signed and sealed by Vinu J. Abraham, P. E. (Submitted under files # **13-0717.10 , #11-1024.13, # 10-0504.02, #09-0423.01, #09-0423.02** and # **050812.06** )

### C. CALCULATIONS

1. Anchor verification calculations complying w/ FBC-2007, dated 02-22-09, prepared, signed and sealed by Warren W. Schafer, P.E. (Submitted under file # **10-0504.02**)
2. Glazing complies with ASTME-1300-02 &-04.

### D. QUALITY ASSURANCE

1. Miami Dade Department of Regulatory and Economic Resources (RER)

Ishaq I. Chanda

**Ishaq I. Chanda, P.E.**
**Product Control Examiner**
**NOA No. 14-0429.06**
**Expiration Date: November 24, 2015**
**Approval Date: July 24, 2014**

## NOTICE OF ACCEPTANCE: EVIDENCE SUBMITTED

### E. MATERIAL CERTIFICATIONS

1. Notice of Acceptance No. **12-1213.02** issued to Eastman Chemical Company (MA) former Solutia, for "**Saflex CP-Saflex & Saflex Composite Glass Interlayer w/ PET**", expiring on 12/11/2018.
2. Notice of Acceptance No. **12-1213.02** issued Eastman Chemical Company (MA) former Solutia Inc. for "**Saflex Clear or colored glass interlayer**", expiring on 05/21/16.

### F. STATEMENTS

1. Statement letter of conformance to FBC 2014(**5th Edition**) and letter of no financial interest, prepared by W. W. Schaefer Engineering & Consulting, P.A., dated April 15, 2014, signed and sealed by Warren W. Schaefer, P.E.
2. Statement letter, prepared by W. W. Schaefer Engineering & Consulting, P.A. dated April 10, 2014, of NOA Drawings and calculation have been reviewed to 2014 FBC and found compliant and that No change to existing NOA documents are required, signed by Warren W. Schaefer, P.E.
3. Statement letters of conformance to FBC 2010, dated June 05, 2013, prepared by W. W. Schafer Engineering & Consulting, P. A., signed and sealed by Warren W. Schafer, P.E. (Submitted under file **# 13-0717.10)**
4. Statement letters of conformance to FBC 2010, dated OCT 19, 2011, prepared by W. W. Schafer Engineering & Consulting, P. A., signed and sealed by Warren W. Schafer, P.E. (Submitted under file **# 11-1224.13**).
5. Statement letters of conformance to FBC 2007 and "No financial interest", both dated February 23, 2009, prepared by W. W. Schafer Engineering & Consulting, P. A., signed and sealed by Warren W. Schafer, P.E. (Submitted under file **# 10-0504.02**)
6. Statement of compliance, issued as part of the above referenced test reports.
7. Addendum letter dated Nov 06, 2013, issued by Architectural Testing, signed and sealed by Vinu J. Abraham, P. E.
8. Distributor Agreement documents in conformance to BCCO guidelines dated April 23, 2009 signed by Christian Peetz, President of Helmut Peetz, GmbH, and by Eva Leon, V. P. of Peetz Windows And Doors, Inc. (Submitted under file # **10-0504.02**)

### G. OTHER

1. This NOA **revises** NOA # **13-0717.10**, expiring on 11/24/15.
2. Test Proposals dated June 06, 2013 via e-mail approved by Jaime D. Gascon, P.E. and test proposal # **06-0091**, approved by BCCO.

Ishaq I. Chanda

**Ishaq I. Chanda, P.E.**
**Product Control Examiner**
**NOA No. 14-0429.06**
**Expiration Date: November 24, 2015**
**Approval Date: July 24, 2014**

## GENERAL NOTES:

1. THESE DOOR SYSTEMS HAVE BEEN TESTED, ANALYZED & APPROVED FOR DESIGN PRESSURES NOT TO EXCEED THOSE SHOWN IN THE "ALLOWABLE DESIGN PRESSURE" TABLE(S).
2. OPENINGS, BUCKING & BUCKING FASTENERS MUST BE PROPERLY DESIGNED & INSTALLED TO TRANSFER WIND LOADS TO THE STRUCTURE.
3. ALL HARDWARE & FASTENERS SHALL BE IN ACCORDANCE WITH THESE DRAWINGS & SHALL NOT VARY UNLESS SPECIFICALLY MENTIONED ON THE DRAWINGS. SPECIFIED ANCHOR EMBED TO BASE MATERIAL SHALL BE BEYOND WALL FINISH OR STUCCO.
4. THE DETAILS & SPECIFICATIONS SHOWN HEREIN REPRESENT THE PRODUCTS TESTED & PROPOSED FOR WATER, AIR, IMPACT, CYCLIC & UNIFORM STATIC AIR PRESSURE TESTING IN CONFORMANCE WITH THE FLORIDA BUILDING CODE PROTOCALS TAS-201, 202 & 203 FOR LARGE MISSILE IMPACT DOORS.
5. THESE DOOR SYSTEMS HAVE BEEN DESIGNED IN ACCORDANCE WITH AND MEET THE REQUIREMENTS OF THE FLORIDA BUILDING CODE (FBC) INCLUDING HIGH VELOCITY HURRICANE ZONES (HVHZ).
6. IMPACT SHUTTERS ARE NOT REQUIRED WITH THESE DOORS.
7. ALL ANCHORS SECURING DOOR FRAME TO PRESSURE TREATED BUCKS OR WOOD FRAMING SHALL BE CAPABLE OF RESISTING CORROSION CAUSED BY THE PRESSURE TREATING CHEMICALS IN THE WOOD.
8. DETERMINE THE POSITIVE & NEGATIVE DESIGN LOADS TO USE WHEN REFERENCING THESE DOCUMENTS IN ACCORDANCE WITH THE GOVERNING CODE AND GOVERNING WIND VELOCITY. FOR WIND LOAD CALCULATIONS IN ACCORDANCE WITH THE FLORIDA BUILDING CODE, A DIRECTIONALITY FACTOR OF Kd = 0.85 MAY BE APPLIED PER THE ASCE 7 STANDARD.
9. NO INCREASE IN ALLOWABLE STRESS HAS BEEN USED IN THE CERTIFICATION OF THIS PRODUCT. WIND LOAD DURATION FACTOR Cd = 1.6 WAS USED FOR WOOD SCREW ANALYSIS ONLY.
10. MATERIALS, INCLUDING BUT NOT LIMITED TO STEEL SCREWS, THAT COME INTO CONTACT WITH OTHER DISSIMILAR MATERIALS SHALL MEET THE REQUIREMENTS OF FLORIDA BUILDING CODE CHAPTER 20.
11. All WOOD MEMBERS OF DOORS THAT MAY POSSIBLY COME INTO CONTACT WITH MASONRY OR CONCRETE SUBSTRATES, ARE SUBJECT TO MOISTURE &/OR ARE SUBJECT TO THE OUTSIDE ENVIRONMENT SHALL BE OF AN APPROVED DURABLE SPECIES OR BE TREATED IN AN APPROVED METHOD WITH AN APPROVED PRESERVATIVE PER FBC SECTION 2326.
12. DOOR POCKETS SHALL BE CONSTRUCTED BY PEETZ AS DETAILED IN THESE DRAWINGS. BECAUSE THE POCKETS ARE NOT IMPACT NOR WIND PRESSURE RATED, THEY SHALL BE COVERED BY AN IMPACT RESISTANT WALL STRUCTURE DESIGNED BY OTHERS.

### LOCKING BOLT QUANTITY REQUIREMENTS WITH LOCKING HARDWARE ITEM #78

| (1) SASH HEIGHT | QUANTITY PER PANEL |
|---|---|
| OVER 104 1/2" | (2) 5 |
| 89" TO 104 1/2" | (3) 4 |
| LESS THAN 89" | (4) 3 |

(1) SASH HEIGHT DIMENSIONS ARE APPROXIMATELY 5" LESS THAN THE FRAME HEIGHT.
(2) 5 POINT LOCKING BOLT POSITIONS CONSIST OF THE BOTTOM 4 BOLTS LOCATED 10 3/8", 47 3/8", 75 7/16" & 85 5/16" FROM BOTTOM OF SASH & THE TOP BOLT LOCATED 7 3/4" FROM TOP OF SASH.
(3) 4 POINT LOCKING BOLT POSITIONS CONSIST OF THE BOTTOM 3 BOLTS LOCATED 10 3/8", 47 3/8" & 75 7/16" FROM BOTTOM OF SASH & THE TOP BOLT LOCATED 7 3/4" FROM TOP OF SASH.
(4) 3 POINT LOCKING BOLT POSITIONS CONSIST OF THE BOTTOM 2 BOLTS LOCATED 10 3/8" & 47 3/8" FROM BOTTOM OF SASH & THE TOP BOLT LOCATED 7 3/4" FROM TOP OF SASH.

### LOCKING BOLT QUANTITY REQUIREMENTS WITH LOCKING HARDWARE ITEM #79

| (1) SASH HEIGHT | QUANTITY PER PANEL |
|---|---|
| OVER 90 3/8" | (2) 3 |
| 90 3/8" & LESS | (3) 2 |

(1) SASH HEIGHT DIMENSIONS ARE APPROXIMATELY 5" LESS THAN THE FRAME HEIGHT.
(2) 3 POINT LOCKING BOLT POSITIONS ARE 9 7/8", 47 1/4" & 86 5/8" FROM BOTTOM OF SASH.
(3) 2 POINT LOCKING BOLT POSITIONS ARE 9 7/8" & 47 1/4" FROM BOTTOM OF SASH.

### INTERLOCK QUANTITY REQUIREMENTS

| (1) SASH HEIGHT | QUANTITY PER PANEL |
|---|---|
| OVER 84 7/8" | 4 |
| LESS THAN 84 7/8" | 3 |

(1) SASH HEIGHT DIMENSIONS ARE APPROXIMATELY 5" LESS THAN THE FRAME HEIGHT

### (1) SILL LOCK BOLT QUANTITY REQUIREMENTS

2 PER DOOR PANEL

(1) SILL LOCK BOLT IS ONLY REQ'D WITH FLUSH MOUNT SILL

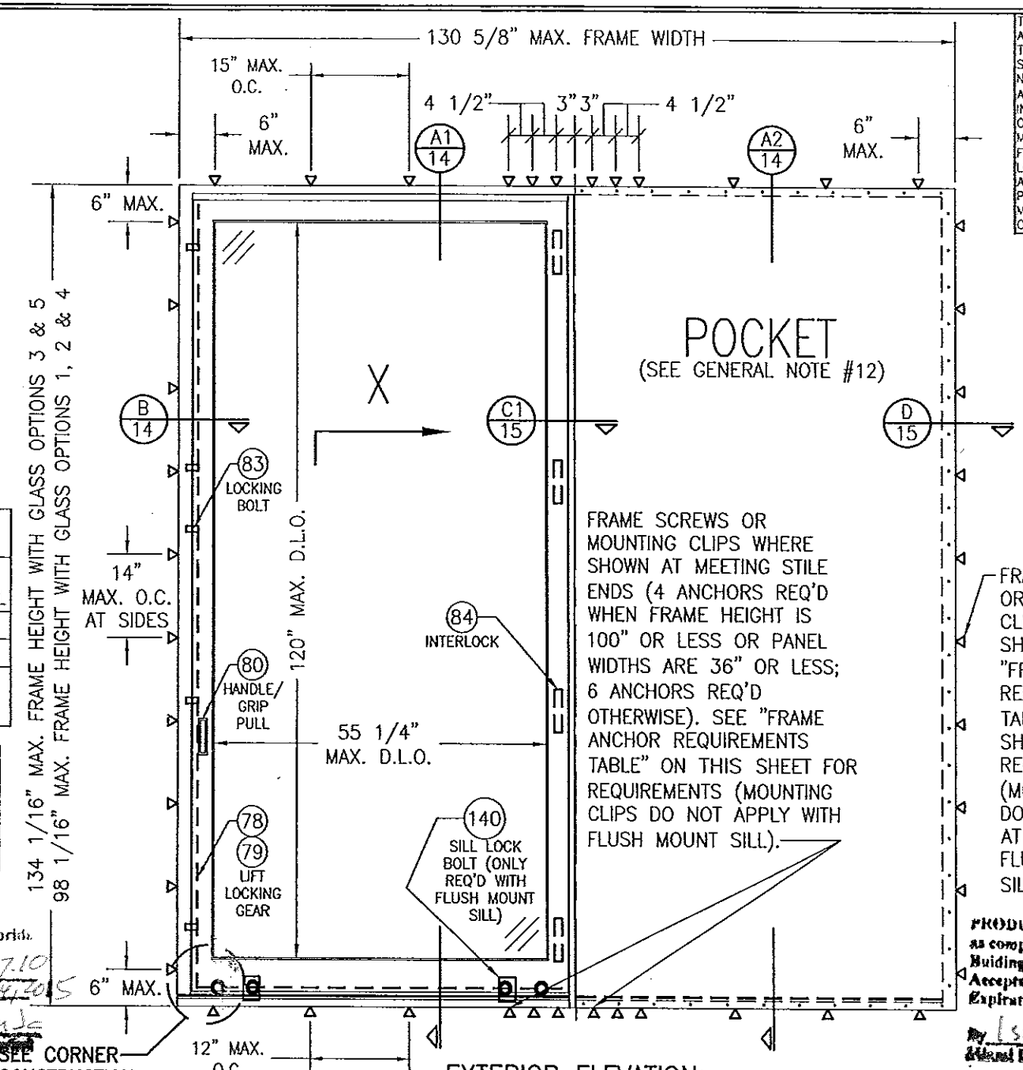


THESE DRAWINGS ARE APPLICABLE ONLY TO THE PRODUCT SPECIFIED. THEY MAY NOT BE USED FOR THE ASSEMBLY AND/OR INSTALLATION OF ANY OTHER PRODUCT NOR MAY THEY BE USED FOR RATIONAL AND/OR LOCAL APPROVAL OF ANY PRODUCT NOT PRODUCED BY THE MANUFACTURER STATED ON THESE DRAWINGS.

PRODUCT REVISED as complying with the Florida Building Code Acceptance No. 12-0717.10 Expiration Date Nov 24, 2015 By Ishaq I. Chanda & Miami-Dade Product Control

PRODUCT REVISED as complying with the Florida Building Code Acceptance No 14-0429.06 Expiration Date Nov 24 2015 By Ishaq I. Chanda & Miami Dade Product Control

EXTERIOR ELEVATION:
1 PANEL DEEP X DOOR WITH POCKET
SCALE: 1/2" = 1'-0"

### ALLOWABLE DESIGN PRESSURE
(ALL DOOR CONDITIONS)

+/-70 PSF

FOR SIMPLIFICATION, ONLY FRAME & SASH PROJECTION LINES ARE SHOWN FOR THESE ELEVATIONS

### FRAME ANCHOR REQUIREMENTS TABLE

| (1) OPENING TYPE (SUBSTRATE) | FRAME/CLIP TO OPENING FASTENER TYPE | MINIMUM EMBED | MINIMUM EDGE DIST. |
|---|---|---|---|
| FRAME SCREWS | | | |
| MIN. 2X_ WOOD FRAME OR BUCK (MIN. GR. 3 & G=0.55) | 1/4" CONCRETE SCREW | 1 1/4" | 1 1/2" |
| MIN. 16 GA. 33 KSI METAL STUD | 1/4" GR. 5 SELF TAP/DRILL SCREW | FULL | 1 1/2" |
| MIN. 1/8" THK A36 STEEL | 1/4" GR. 5 SELF TAP/DRILL SCREW | FULL | 1 1/2" |
| MIN. 1/8" THK 6063-T5 ALUM. | 1/4" GR. 5 SELF TAP/DRILL SCREW | FULL | 1 1/2" |
| (3) C-90 CMU/2500 PSI CONCRETE | (2) 1/4" CONCRETE SCREW | 1 1/2" | 2 1/2" |
| MOUNTING CLIP SCREWS | | | |
| MIN. 2X_ WOOD FRAME OR BUCK (MIN. GR. 3 & G=0.55) | NO. 8 X 1 1/2" SMS | 1 3/8" | 1/2" |
| MIN. 1/8" THK A36 STEEL | NO. 8 GR. 5 SELF TAP/DRILL SCREW | FULL | 1/2" |
| MIN. 1/8" THK 6063-T5 ALUM. | NO. 8 GR. 5 SELF TAP/DRILL SCREW | FULL | 1/2" |

(1) SUPPORTING SUBSTRATE DEPTH SHALL BE SUCH THAT ALL DOOR FRAME/SILL MEMBER EDGES DO NOT EXTEND MORE THAN 1 1/2" PAST THE SUPPORTING SUBSTRATE EDGES.
(2) CONCRETE SCREWS SHALL BE ELCO ULTRACONS (C.S.), ELCO CRETE-FLEX (S.S.), ITW RAMSET/RED HEAD TAPCONS (C.S. OR S.S.) OR HILTI KWIK-CON II (C.S OR S.S.).
(3) CMU IS APPLICABLE AT SIDES ONLY (NOT AT HEAD OR SILL)

### CORNER CONSTRUCTION:

FRAME HEAD TO JAMB: JAMB MEMBERS ARE COPED, BUTTED & JOINED TO HEAD WITH NO. 10" X 4 3/4" WOOD SCREWS & GLUED/SEALED WITH BINDAN D4; (6 SCREWS REQ'D WITH 4 & 3 PANEL DEEP FRAMES, 4 SCREWS REQ'D WITH 2 PANEL DEEP FRAMES & 3 SCREWS REQ'D WITH 1 PANEL DEEP FRAMES)
FRAME HEAD TO HEAD (90 DEG. CORNER CONDITION): SEE DETAILS ON SHEET 31.
STANDARD SILL TO JAMB OPTION 1: JAMB MEMBERS ARE COPED, BUTTED, JOINED TO SILL WITH M8 X 1 9/16" MACHINE SCREWS THRU THE SILL BASE INTO THE JAMB MEMBERS THREADED INSERT & SEALED WITH SG20 SILICONE (4 SCREWS REQ'D WITH 4 PANEL DEEP FRAMES; 3 SCREWS REQ'D WITH 3 PANEL DEEP FRAMES; 2 SCREWS REQ'D WITH 2 & 1 PANEL DEEP FRAMES).
STANDARD SILL TO JAMB OPTION 2: JAMB MEMBERS ARE SQUARE CUT, BUTTED, JOINED TO SILL WITH M8 X 3 15/16" CYLINDER SCREWS THRU THE SILL BASE INTO THE JAMB MEMBERS DOWELS & SEALED WITH A RUBBER GASKET; (3 SCREWS REQ'D WITH 4 & 3 PANEL DEEP FRAMES; 2 SCREWS REQ'D WITH 2 & 1 PANEL DEEP FRAMES).
FLUSH MOUNT SILL TO JAMB: JAMB MEMBERS ARE SQUARE CUT, BUTTED, JOINED TO SILL WITH M8 (OR NO. 10) X 4 3/4" WOOD SCREWS THRU THE SILL BASE INTO THE JAMB MEMBERS; (5 SCREWS REQ'D WITH 4 & 3 PANEL DEEP FRAMES; 3 SCREWS REQ'D WITH 2 & 1 PANEL DEEP FRAMES). ENDS ARE SEALED WITH SG20 SILICONE SEALANT.
FLUSH MOUNT SILL TO FLUSH MOUNT SILL (90 DEG. CORNER CONDITION): SEE DETAIL ON SHEET 32
TOP RAIL TO STILE: MEMBERS ARE COPPED, BUTTED, JOINED WITH SIX(6) 0.394" X 3.150" DOWELS & GLUED/SEALED WITH BINDAN D4.
BOTTOM RAIL TO STILE: MEMBERS ARE COPPED, BUTTED, JOINED WITH TEN(10) 0.394" X 3.150" DOWELS & GLUED/SEALED WITH BINDAN D4.
FRAME CLAD: MEMBERS ARE MITERED TOGETHER & WELDED ON THE INTERIOR SIDE.
SASH CLAD (TOP RAIL TO STILE): MEMBERS ARE MITERED TOGETHER & WELDED TOGETHER ON THE INTERIOR SIDE.
SASH CLAD (BOTTOM RAIL TO STILE): MEMBERS ARE COPED, BUTTED & WELDED TOGETHER ON THE INTERIOR SIDE.

WARREN W. SCHAEFER LICENSE NO. 44135 STATE OF FLORIDA PROFESSIONAL ENGINEER

| NO. | REVISION DESCRIPTION | BY | DATE |
|---|---|---|---|
| A1 | CHANGE CONSULTANTS ADDRESS | W.R.M. | 10/19/11 |
| B1 | ADDED CORNER CONDITION, FLUSH MOUNT SILL & MOTOR OPERATOR | W.R.M. | 06/13/13 |

DRAWN BY: W.R.M. | CHECKED BY: W.W.S.
PLOT: 1=24 | DATE: 04/04/09

DRAWING TITLE: LIFT & SLIDE BRONZE CLAD SLIDING GLASS IMPACT DOORS

MANUFACTURER: PEETZ WINDOWS & DOORS, 15951 S.W. 41ST STREET, SUITE 150, WESTON, FL 33331, 954-659-3887

CONSULTANTS: W. W. SCHAEFER ENGINEERING & CONSULTING, P.A. (CA 6809), 7480 150TH COURT NORTH, PALM BEACH GARDENS, FL 33418, PHONE: 561-744-3424

CERTIFICATION: NOV 06 2013 — WARREN W. SCHAEFER, P.E. NO. 44135, P.E.

DRAWING NO. 1632 | REV. B
SHEET NO. 1 OF 38

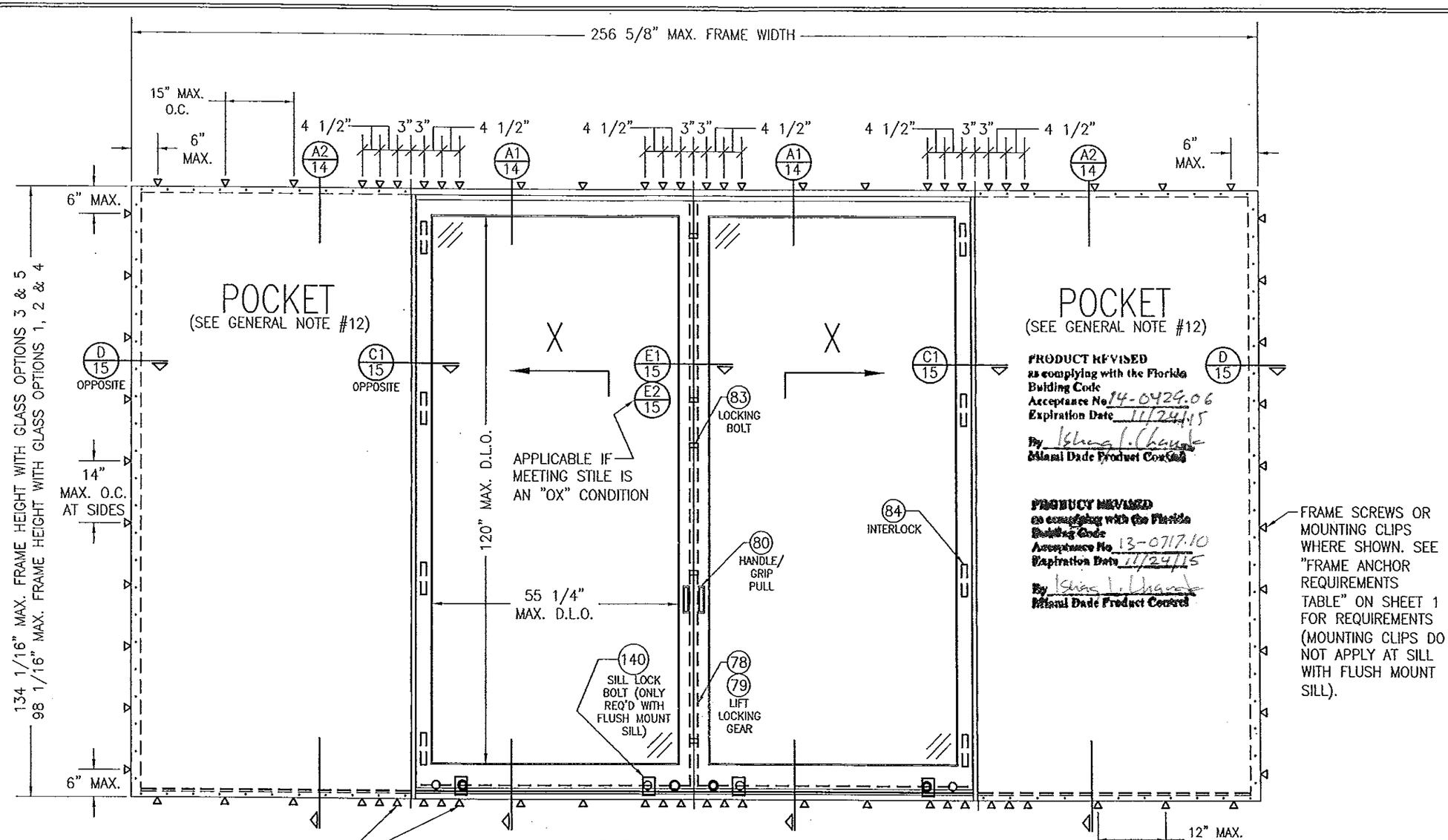


FRAME SCREWS OR MOUNTING CLIPS WHERE SHOWN AT MEETING STILE ENDS (4 ANCHORS REQ'D WHEN FRAME HEIGHT IS 100" OR LESS OR PANEL WIDTHS ARE 36" OR LESS; 6 ANCHORS REQ'D OTHERWISE). SEE "FRAME ANCHOR REQUIREMENTS TABLE" ON SHEET 1 FOR REQUIREMENTS (MOUNTING CLIPS DO NOT APPLY WITH FLUSH MOUNT SILL).

## EXTERIOR ELEVATION: 1 PANEL DEEP X-X DOOR WITH POCKETS

SCALE: 1/2" = 1'-0"

FOR SIMPLIFICATION, ONLY FRAME & SASH PROJECTION LINES ARE SHOWN FOR THESE ELEVATIONS

WARREN W. SCHAEFER LICENSE No 44135 STATE OF FLORIDA PROFESSIONAL ENGINEER

| DRAWN BY: W.R.M. | CHECKED BY: W.W.S. |
|---|---|
| PLOT: 1=24 | DATE: 04/04/09 |

| NO. | REVISION DESCRIPTION | BY | DATE |
|---|---|---|---|
| | | | |

DRAWING TITLE
LIFT & SLIDE BRONZE CLAD SLIDING GLASS IMPACT DOORS

MANUFACTURER
PEETZ WINDOWS & DOORS
15951 S.W. 41ST STREET; SUITE 150
WESTON, FL 33331
954-659-3887

CONSULTANTS
W. W. SCHAEFER ENGINEERING & CONSULTING, P.A. (CA 6809)
7480 150TH COURT NORTH
PALM BEACH GARDENS, FL 33418
PHONE: 561-744-3424

CERTIFICATION
NOV 06 2013
WARREN W. SCHAEFER, P.E.
P.E. NO. 44135

DRAWING NO. 1632 REV. B

SHEET NO. 2 OF 38

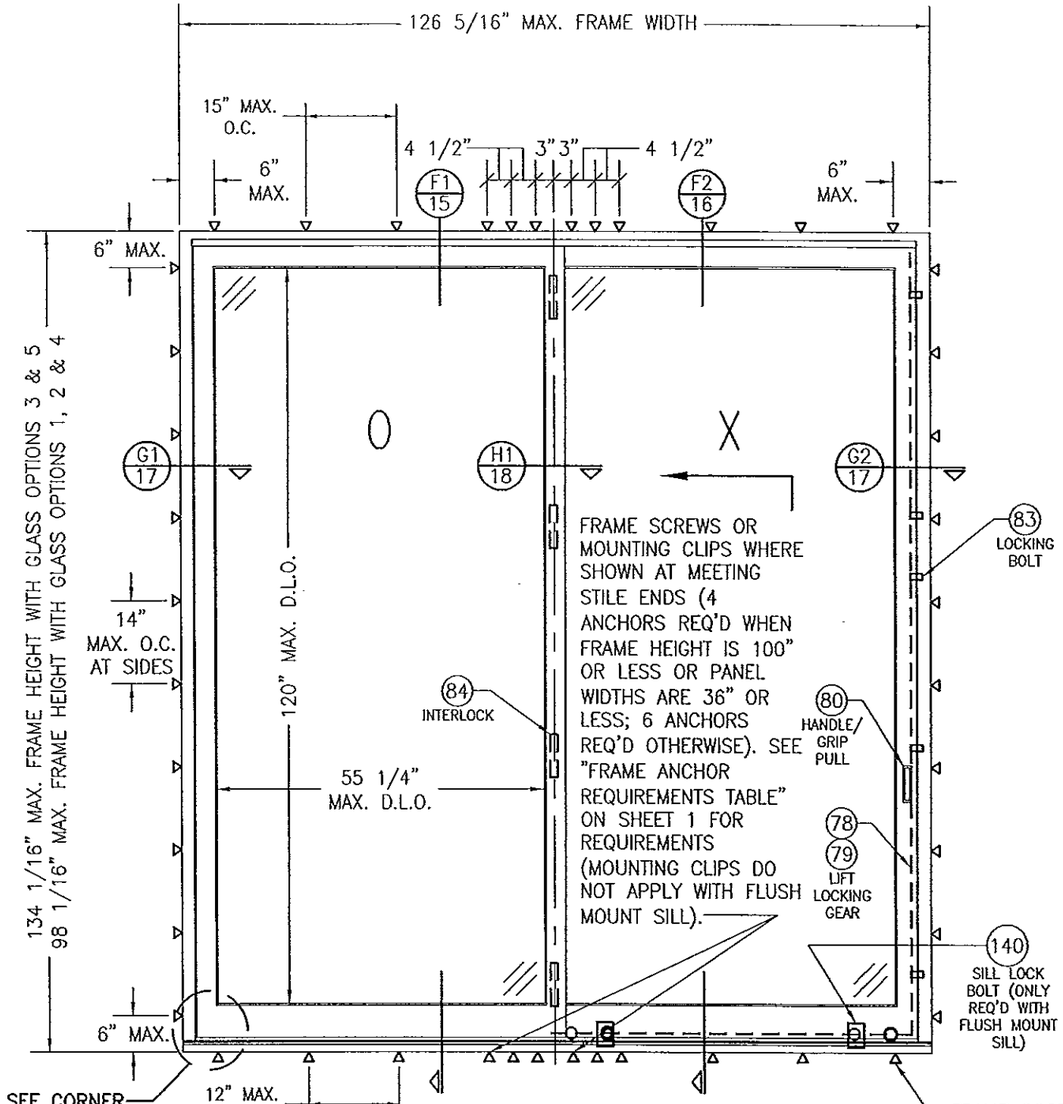


EXTERIOR ELEVATION:
2 PANEL DEEP OX DOOR WITHOUT POCKETS

SCALE: 1/2" = 1'-0"

SEE APPROVED CONFIGURATIONS ON SHEET 13 FOR ADDITIONAL 2-DEEP PANEL CONFIGURATIONS

FRAME SCREWS OR MOUNTING CLIPS WHERE SHOWN. SEE "FRAME ANCHOR REQUIREMENTS TABLE" ON SHEET 1 FOR REQUIREMENTS (MOUNTING CLIPS DO NOT APPLY AT SILL WITH FLUSH MOUNT SILL).

FOR SIMPLIFICATION, ONLY FRAME & SASH PROJECTION LINES ARE SHOWN FOR THESE ELEVATIONS

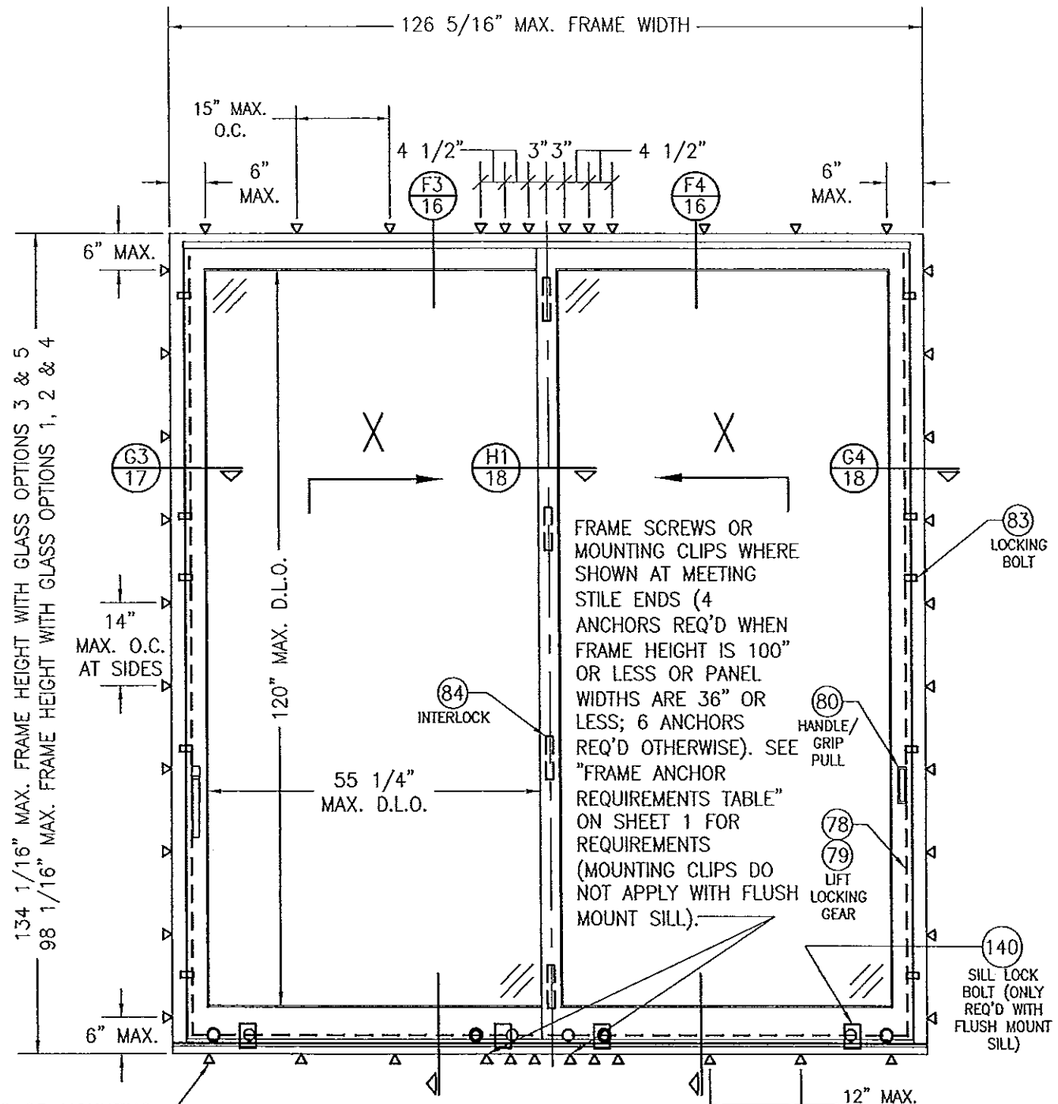


EXTERIOR ELEVATION:
2 PANEL DEEP XX DOOR WITHOUT POCKETS

SCALE: 1/2" = 1'-0"

SEE APPROVED CONFIGURATIONS ON SHEET 13 FOR ADDITIONAL 2-DEEP PANEL CONFIGURATIONS

PRODUCT REVISED
as complying with the Florida Building Code
Acceptance No. 14-0429.06
Expiration Date 11/24/15
By Miami Dade Product Control

PRODUCT REVISED
as complying with the Florida Building Code
Acceptance No. 13-0717.10
Expiration Date 11/24/15
By Miami Dade Product Control

WARREN W. SCHAEFER LICENSE No. 44135 STATE OF FLORIDA PROFESSIONAL ENGINEER

| NO. | REVISION DESCRIPTION | BY | DATE |
|---|---|---|---|
| | | | |

DRAWN BY: W.R.M.
CHECKED BY: W.W.S.
PLOT: 1=24
DATE: 04/04/09

DRAWING TITLE
LIFT & SLIDE BRONZE CLAD SLIDING GLASS IMPACT DOORS

MANUFACTURER
PEETZ WINDOWS & DOORS
15951 S.W. 41ST STREET; SUITE 150
WESTON, FL 33331
954-659-3887

CONSULTANTS
W. W. SCHAEFER ENGINEERING & CONSULTING, P.A. (CA 6809)
7480 150TH COURT NORTH
PALM BEACH GARDENS, FL 33418
PHONE: 561-744-3424

CERTIFICATION
NOV 06 2013
WARREN W. SCHAEFER, P.E.
P.E. NO. 44135

DRAWING NO. 1632
REV. B
SHEET NO. 3 OF 38

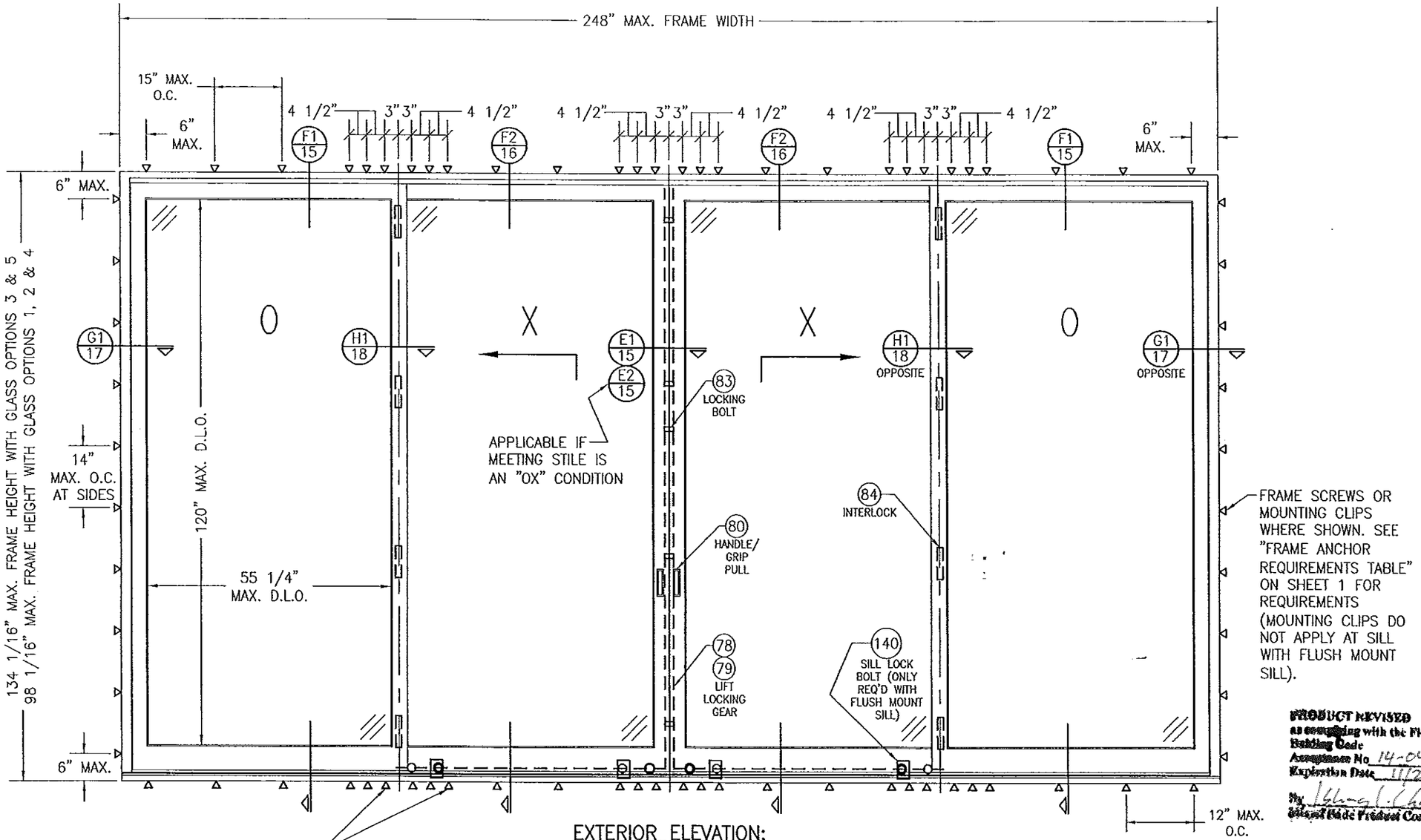


FRAME SCREWS OR MOUNTING CLIPS WHERE SHOWN AT MEETING STILE ENDS (4 ANCHORS REQ'D WHEN FRAME HEIGHT IS 100" OR LESS OR PANEL WIDTHS ARE 36" OR LESS; 6 ANCHORS REQ'D OTHERWISE). SEE "FRAME ANCHOR REQUIREMENTS TABLE" ON SHEET 1 FOR REQUIREMENTS (MOUNTING CLIPS DO NOT APPLY WITH FLUSH MOUNT SILL).

## EXTERIOR ELEVATION: 2 PANEL DEEP OXXO DOOR WITHOUT POCKETS

SCALE: 1/2" = 1'-0"

SEE APPROVED CONFIGURATIONS ON SHEET 13 FOR ADDITIONAL 2--DEEP PANEL CONFIGURATIONS

FOR SIMPLIFICATION, ONLY FRAME & SASH PROJECTION LINES ARE SHOWN FOR THESE ELEVATIONS

PRODUCT REVISED as complying with the Florida Building Code Acceptance No. 14-0429.06 Expiration Date 11/24/15 By [signature] Miami-Dade Product Control

PRODUCT REVISED as complying with the Florida Building Code Acceptance No. 13-0717.19 Expiration Date 11/24/15 By [signature] Miami-Dade Product Control

WARREN W. SCHAEFER LICENSE No. 44135 STATE OF FLORIDA PROFESSIONAL ENGINEER

| DRAWN BY: W.R.V. | CHECKED BY: W.W.S. |
|---|---|
| PLOT: 1=24 | DATE: 04/04/09 |

| NO. | REVISION DESCRIPTION | BY | DATE |
|---|---|---|---|
| | | | |

DRAWING TITLE: LIFT & SLIDE BRONZE CLAD SLIDING GLASS IMPACT DOORS

MANUFACTURER: PEETZ WINDOWS & DOORS, 15951 S.W. 41ST STREET; SUITE 150, WESTON, FL 33331, 954-659-3887

CONSULTANTS: W. W. SCHAEFER ENGINEERING & CONSULTING, P.A. (CA 6809), 7480 150TH COURT NORTH, PALM BEACH GARDENS, FL 33418, PHONE: 561-744-3424

CERTIFICATION: NOV 06 2013 — WARREN W. SCHAEFER, P.E. P.E. NO. 44135

DRAWING NO. 1632 REV. B

SHEET NO. 4 OF 38

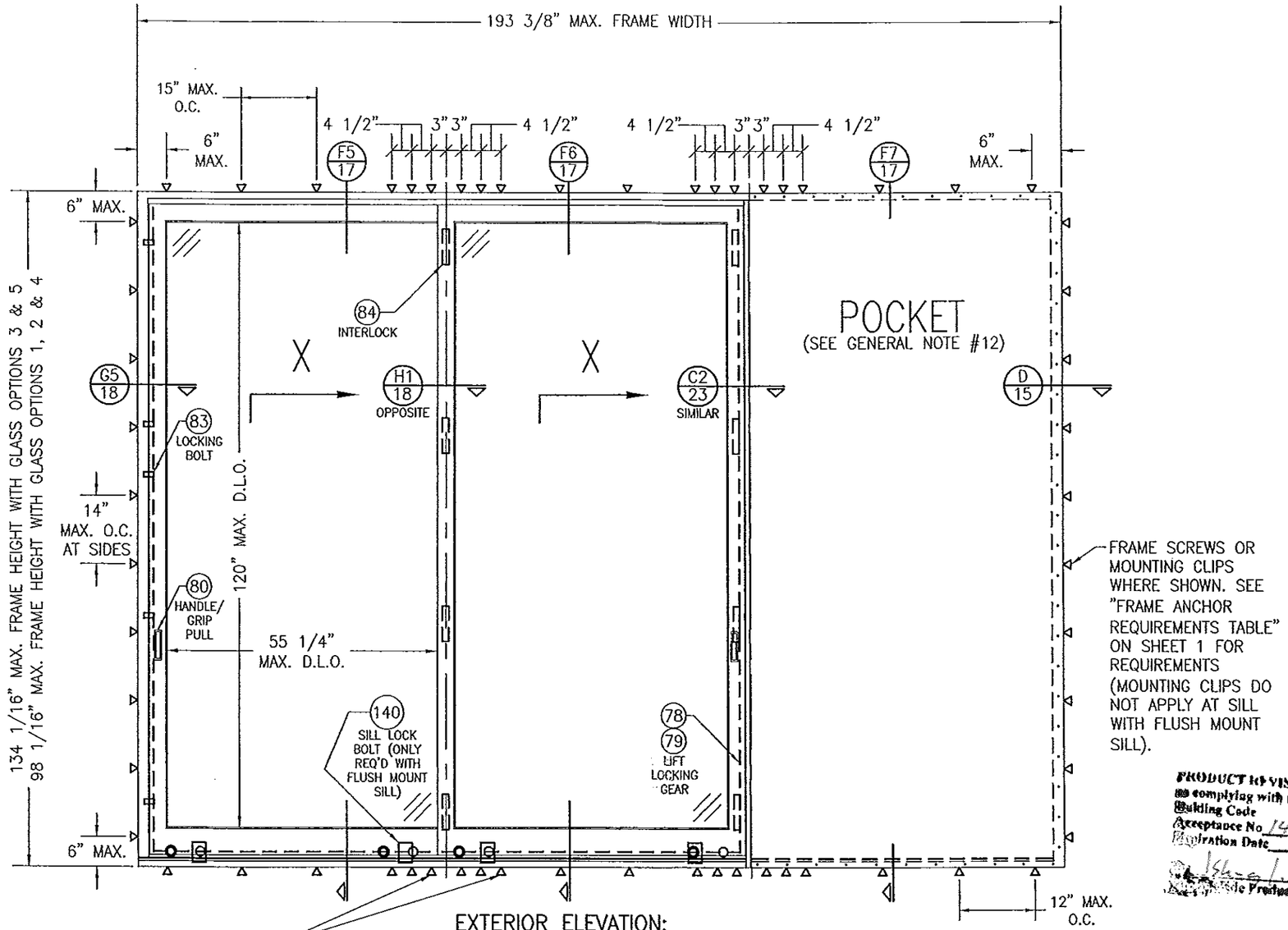


FRAME SCREWS OR MOUNTING CLIPS WHERE SHOWN AT MEETING STILE ENDS (4 ANCHORS REQ'D WHEN FRAME HEIGHT IS 100" OR LESS OR PANEL WIDTHS ARE 36" OR LESS; 6 ANCHORS REQ'D OTHERWISE). SEE "FRAME ANCHOR REQUIREMENTS TABLE" ON SHEET 1 FOR REQUIREMENTS (MOUNTING CLIPS DO NOT APPLY WITH FLUSH MOUNT SILL).

## EXTERIOR ELEVATION: 2 PANEL DEEP XX DOOR WITH POCKET

SCALE: 1/2" = 1'-0"

SEE APPROVED CONFIGURATIONS ON SHEET 13 FOR ADDITIONAL 2-DEEP PANEL CONFIGURATIONS

FOR SIMPLIFICATION, ONLY FRAME & SASH PROJECTION LINES ARE SHOWN FOR THESE ELEVATIONS

PRODUCT REVISED
In complying with the Florida Building Code
Acceptance No. 14-0429.06
Expiration Date 11/24/15
Chief, Product Control

PRODUCT REVISED
Acceptance No. 13-0717.10
Expiration Date 11/24/15

WARREN W. SCHAEFER LICENSE No 44135 STATE OF FLORIDA PROFESSIONAL ENGINEER

| DRAWN BY: W.R.M. | CHECKED BY: W.W.S. |
|---|---|
| PLOT: 1=24 | DATE: 04/04/09 |

| NO. | REVISION DESCRIPTION | BY | DATE |
|---|---|---|---|
| | | | |

DRAWING TITLE
LIFT & SLIDE BRONZE CLAD SLIDING GLASS IMPACT DOORS

MANUFACTURER
PEETZ WINDOWS & DOORS
15951 S.W. 41ST STREET; SUITE 150
WESTON, FL 33331
954-659-3887

CONSULTANTS
W. W. SCHAEFER ENGINEERING & CONSULTING, P.A. (CA 6809)
7480 150TH COURT NORTH
PALM BEACH GARDENS, FL 33418
PHONE: 561-744-3424

CERTIFICATION
NOV 06 2013
WARREN W. SCHAEFER, P.E.
P.E. NO. 44135

DRAWING NO. 1632
REV. B
SHEET NO. 5 OF 38

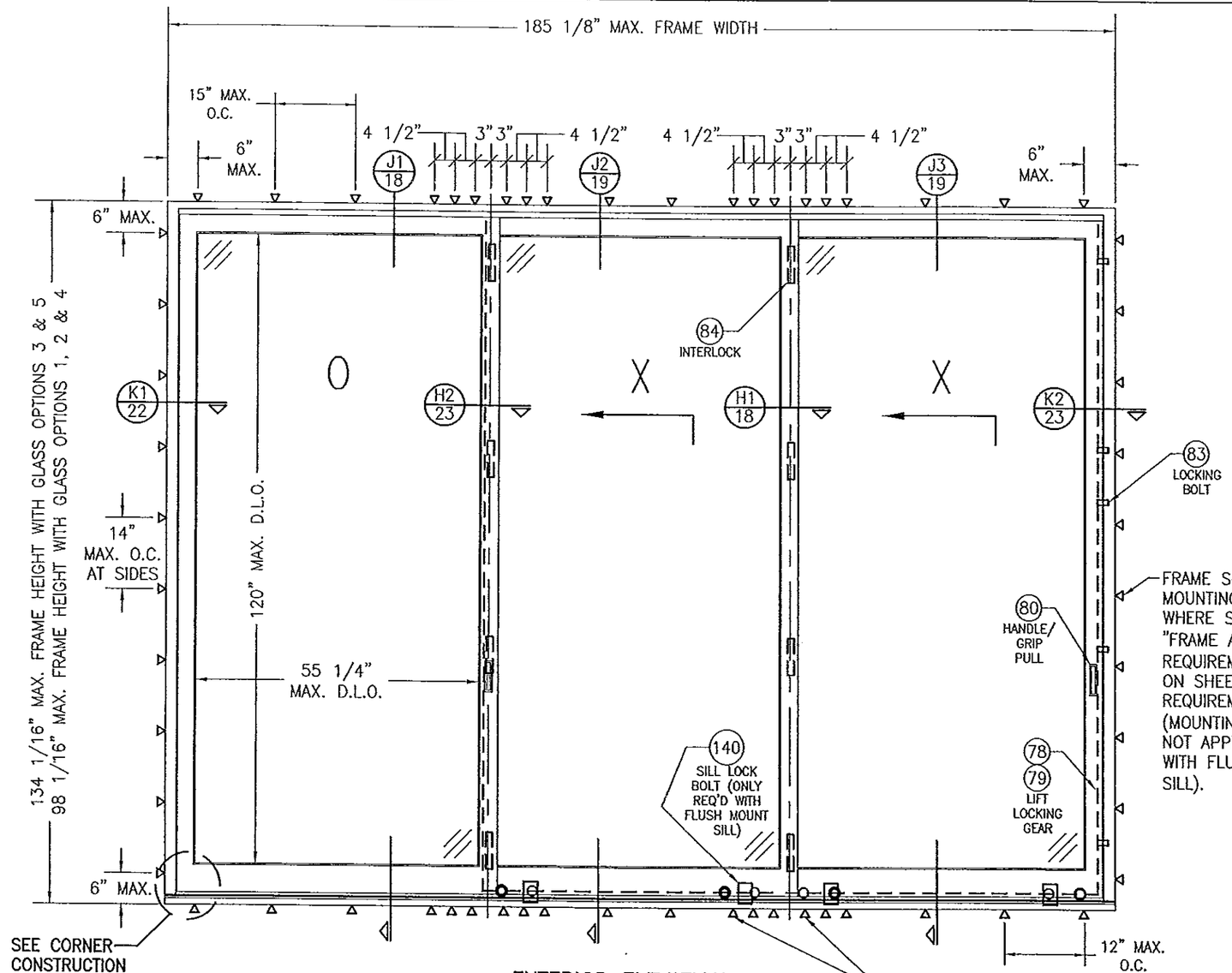


PRODUCT REVISED
as complying with the Florida Building Code
Acceptance No. 14-0429.06
Expiration Date 11/24/15
By [signature]
Director of Product Control

PRODUCT REVISED
as complying with the Florida Building Code
Acceptance No. 13-0717.10
Expiration Date 11/24/15
By [signature]
Director of Product Control

## EXTERIOR ELEVATION; 3 PANEL DEEP OXX DOOR WITHOUT POCKETS

SCALE: 1/2" = 1'-0"

SEE APPROVED CONFIGURATIONS ON SHEET 13 FOR ADDITIONAL 3-DEEP PANEL CONFIGURATIONS

FRAME SCREWS OR MOUNTING CLIPS WHERE SHOWN AT MEETING STILE ENDS (4 ANCHORS REQ'D WHEN FRAME HEIGHT IS 100" OR LESS OR PANEL WIDTHS ARE 36" OR LESS; 6 ANCHORS REQ'D OTHERWISE). SEE "FRAME ANCHOR REQUIREMENTS TABLE" ON SHEET 1 FOR REQUIREMENTS (MOUNTING CLIPS DO NOT APPLY WITH FLUSH MOUNT SILL).

FOR SIMPLIFICATION, ONLY FRAME & SASH PROJECTION LINES ARE SHOWN FOR THESE ELEVATIONS

WARREN W. SCHAEFER LICENSE No. 44135 STATE OF FLORIDA PROFESSIONAL ENGINEER

| DRAWN BY: W.R.M. | CHECKED BY: W.W.S. |
|---|---|
| PLOT: 1=24 | DATE: 04/04/09 |

| NO. | REVISION DESCRIPTION | BY | DATE |
|---|---|---|---|
| | | | |

DRAWING TITLE
LIFT & SLIDE BRONZE CLAD SLIDING GLASS IMPACT DOORS

MANUFACTURER
PEETZ WINDOWS & DOORS
15951 S.W. 41ST STREET; SUITE 150
WESTON, FL 33331
954-659-3887

CONSULTANTS
W. W. SCHAEFER ENGINEERING & CONSULTING, P.A. (CA 6809)
7480 150TH COURT NORTH
PALM BEACH GARDENS, FL 33418
PHONE: 561-744-3424

CERTIFICATION
NOV 06 2013
WARREN W. SCHAEFER, P.E.
P.E. NO. 44135

DRAWING NO. 1632 REV. B

SHEET NO. 6 OF 38

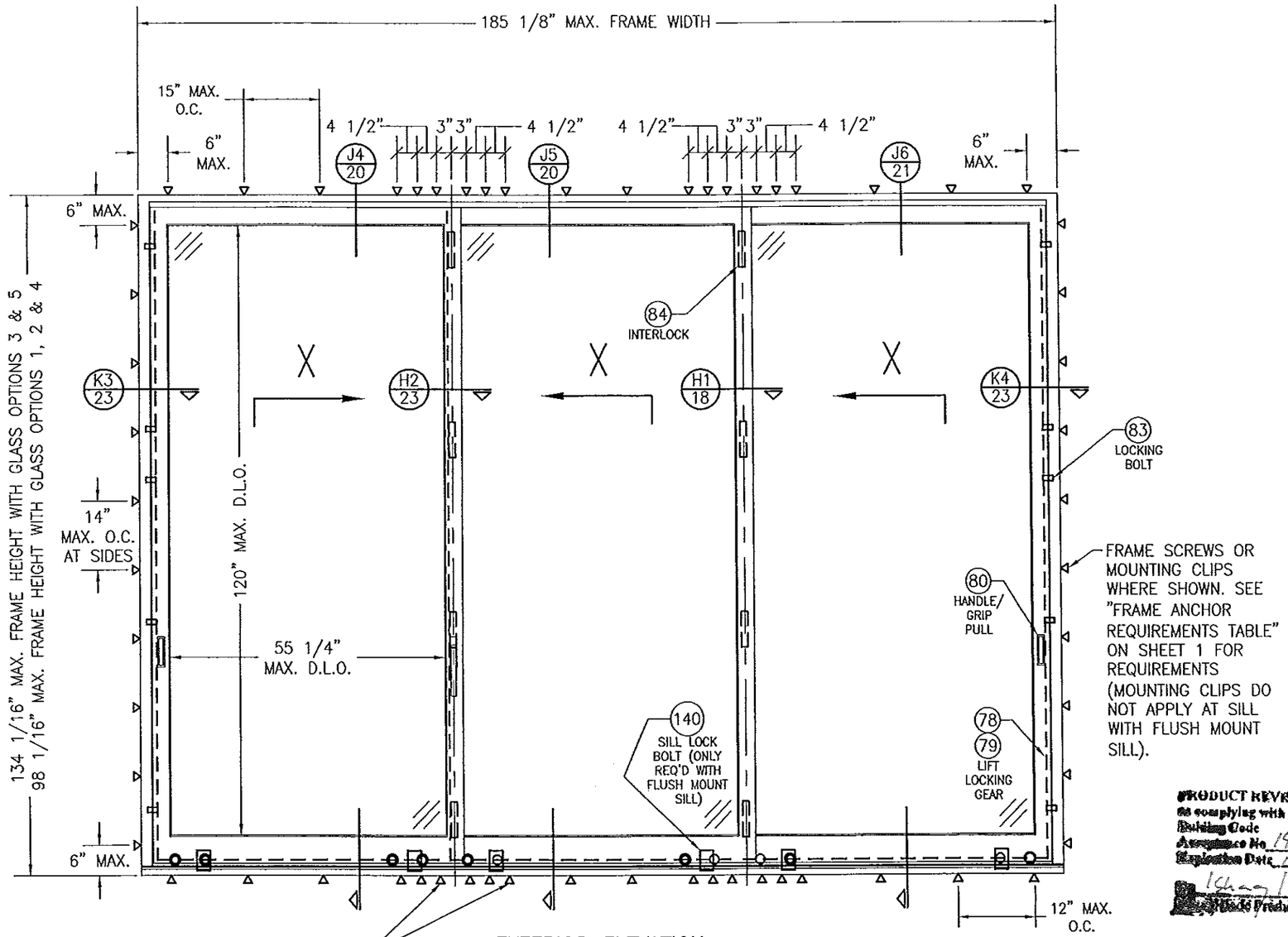


FRAME SCREWS OR MOUNTING CLIPS WHERE SHOWN. SEE "FRAME ANCHOR REQUIREMENTS TABLE" ON SHEET 1 FOR REQUIREMENTS (MOUNTING CLIPS DO NOT APPLY AT SILL WITH FLUSH MOUNT SILL).

FRAME SCREWS OR MOUNTING CLIPS WHERE SHOWN AT MEETING STILE ENDS (4 ANCHORS REQ'D WHEN FRAME HEIGHT IS 100" OR LESS OR PANEL WIDTHS ARE 36" OR LESS; 6 ANCHORS REQ'D OTHERWISE). SEE "FRAME ANCHOR REQUIREMENTS TABLE" ON SHEET 1 FOR REQUIREMENTS (MOUNTING CLIPS DO NOT APPLY WITH FLUSH MOUNT SILL).

## EXTERIOR ELEVATION: 3 PANEL DEEP XXX DOOR WITHOUT POCKETS

SCALE: 1/2" = 1'-0"

SEE APPROVED CONFIGURATIONS ON SHEET 13 FOR ADDITIONAL 3-DEEP PANEL CONFIGURATIONS

FOR SIMPLIFICATION, ONLY FRAME & SASH PROJECTION LINES ARE SHOWN FOR THESE ELEVATIONS

PRODUCT REVISED
as complying with the Florida Building Code
Acceptance No. 14-0429.06
Expiration Date 11/24/15
By Ishwar T. Chanda
Miami Dade Product Control

PRODUCT REVISED
as complying with the Florida Building Code
Acceptance No. 13-0717.10
Expiration Date 11/24/15
By Ishwar T. Chanda
Miami Dade Product Control

WARREN W. SCHAEFER LICENSE No 44135 STATE OF FLORIDA PROFESSIONAL ENGINEER

| DRAWN BY: W.R.M. | CHECKED BY: W.W.S. |
|---|---|
| PLOT: 1=24 | DATE: 04/04/09 |

| NO. | REVISION DESCRIPTION | BY | DATE |
|---|---|---|---|
| | | | |

DRAWING TITLE
LIFT & SLIDE BRONZE CLAD SLIDING GLASS IMPACT DOORS

MANUFACTURER
PEETZ WINDOWS & DOORS
15951 S.W. 41ST STREET, SUITE 150
WESTON, FL 33331
954-659-3887

CONSULTANTS
W. W. SCHAEFER ENGINEERING & CONSULTING, P.A. (CA 6809)
7480 150TH COURT NORTH
PALM BEACH GARDENS, FL 33418
PHONE: 561-744-3424

CERTIFICATION
NOV 06 2013
WARREN W. SCHAEFER P.E.
P.E. NO. 44135

DRAWING NO. 1632
REV. B
SHEET NO. 7 OF 38

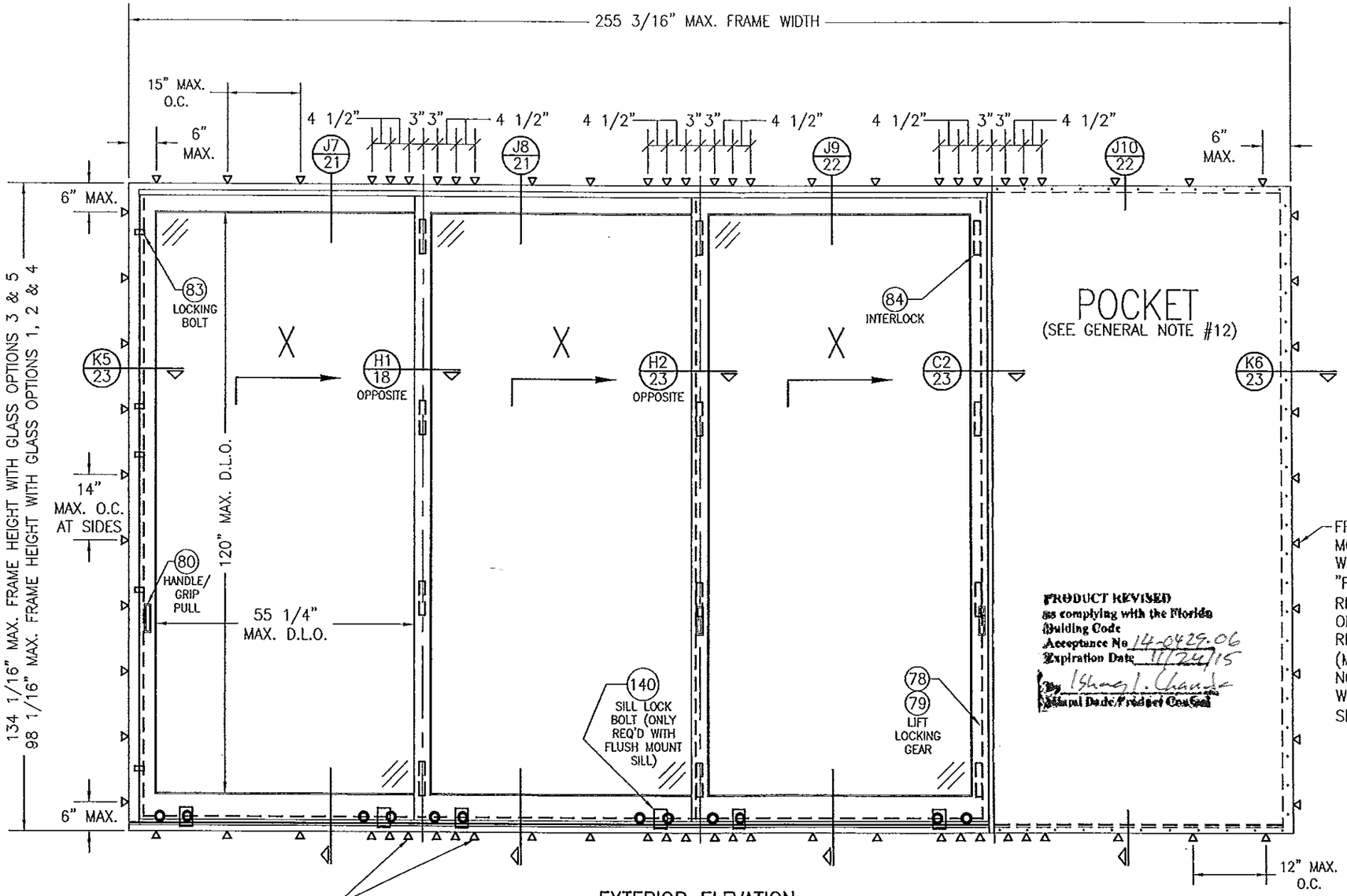


PRODUCT REVISED
as complying with the Florida Building Code
Acceptance No. 14-0429.06
Expiration Date 11/24/15
By Shang L. Chang
Miami Dade/Product Control

FRAME SCREWS OR MOUNTING CLIPS WHERE SHOWN AT MEETING STILE ENDS (4 ANCHORS REQ'D WHEN FRAME HEIGHT IS 100" OR LESS OR PANEL WIDTHS ARE 36" OR LESS; 6 ANCHORS REQ'D OTHERWISE). SEE "FRAME ANCHOR REQUIREMENTS TABLE" ON SHEET 1 FOR REQUIREMENTS (MOUNTING CLIPS DO NOT APPLY WITH FLUSH MOUNT SILL).

## EXTERIOR ELEVATION:
## 3 PANEL DEEP XXX DOOR WITH POCKET

SCALE: 1/2" = 1'-0"

SEE APPROVED CONFIGURATIONS ON SHEET 13 FOR ADDITIONAL 3-DEEP PANEL CONFIGURATIONS

FOR SIMPLIFICATION, ONLY FRAME & SASH PROJECTION LINES ARE SHOWN FOR THESE ELEVATIONS

PRODUCT REVISED
as complying with the Florida Building Code
Acceptance No. 13-0717.10
Expiration Date 11/24/15
By Shang L. Chang
Miami Dade/Product Control

WARREN W. SCHAEFER LICENSE NO. 44135 STATE OF FLORIDA PROFESSIONAL ENGINEER

| NO. | REVISION DESCRIPTION | BY | DATE |
|---|---|---|---|
| | | | |

DRAWN BY: W.R.M. | CHECKED BY: W.W.S.
PLOT: 1=24 | DATE: 04/04/09

DRAWING TITLE: LIFT & SLIDE BRONZE CLAD SLIDING GLASS IMPACT DOORS

MANUFACTURER: PEETZ WINDOWS & DOORS, 15951 S.W. 41ST STREET, SUITE 150, WESTON, FL 33331, 954-659-3887

CONSULTANTS: W. W. SCHAEFER ENGINEERING & CONSULTING, P.A. (CA 6809), 7480 150TH COURT NORTH, PALM BEACH GARDENS, FL 33418, PHONE: 561-744-3424

CERTIFICATION: NOV 06 2013
WARREN W. SCHAEFER, P.E. NO. 44135

DRAWING NO. 1632 | REV. B

SHEET NO. 8 OF 38

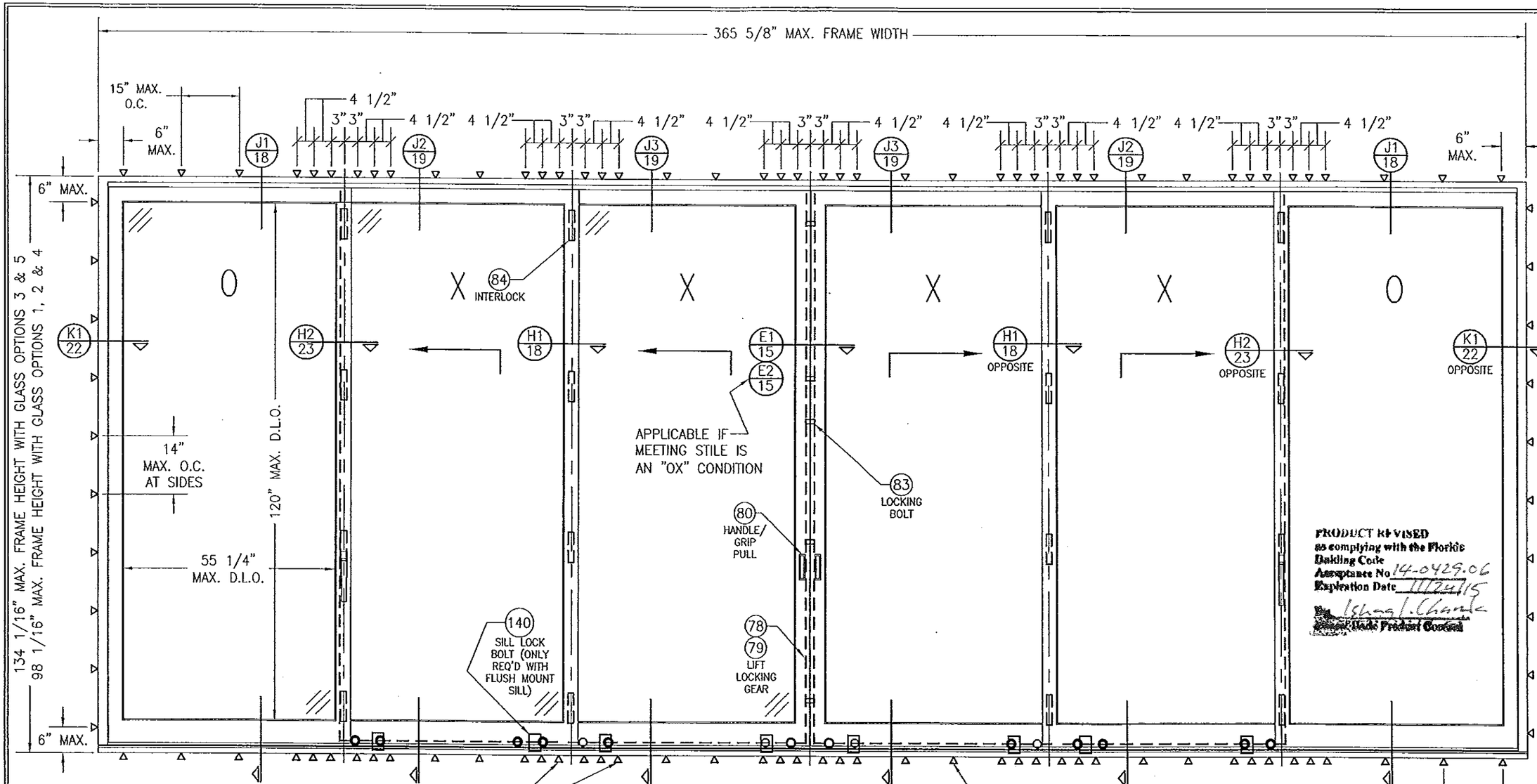


FRAME SCREWS OR MOUNTING CLIPS WHERE SHOWN AT MEETING STILE ENDS (4 ANCHORS REQ'D WHEN FRAME HEIGHT IS 100" OR LESS OR PANEL WIDTHS ARE 36" OR LESS; 6 ANCHORS REQ'D OTHERWISE). SEE "FRAME ANCHOR REQUIREMENTS TABLE" ON SHEET 1 FOR REQUIREMENTS (MOUNTING CLIPS DO NOT APPLY WITH FLUSH MOUNT SILL).

## EXTERIOR ELEVATION:
## 3 PANEL DEEP OXXXXO DOOR WITHOUT POCKETS

SCALE: N.T.S.

SEE APPROVED CONFIGURATIONS ON SHEET 13 FOR ADDITIONAL 3-DEEP PANEL CONFIGURATIONS

FRAME SCREWS OR MOUNTING CLIPS WHERE SHOWN. SEE "FRAME ANCHOR REQUIREMENTS TABLE" ON SHEET 1 FOR REQUIREMENTS (MOUNTING CLIPS DO NOT APPLY AT SILL WITH FLUSH MOUNT SILL).

FOR SIMPLIFICATION, ONLY FRAME & SASH PROJECTION LINES ARE SHOWN FOR THESE ELEVATIONS

PRODUCT REVISED
as complying with the Florida Building Code
Acceptance No. 13-0717.10
Expiration Date 11/24/15
By Miami-Dade Product Control

WARREN W. SCHAEFER LICENSE No. 44135 STATE OF FLORIDA PROFESSIONAL ENGINEER

| DRAWN BY: W.R.M. | CHECKED BY: W.W.S. |
|---|---|
| PLOT: 1=24 | DATE: 04/04/09 |

| NO. | REVISION DESCRIPTION | BY | DATE |
|---|---|---|---|
| | | | |

DRAWING TITLE
LIFT & SLIDE BRONZE CLAD SLIDING GLASS IMPACT DOORS

MANUFACTURER
PEETZ WINDOWS & DOORS
15951 S.W. 41ST STREET, SUITE 150
WESTON, FL 33331
954-659-3887

CONSULTANTS
W. W. SCHAEFER ENGINEERING & CONSULTING, P.A. (CA 6809)
7480 150TH COURT NORTH
PALM BEACH GARDENS, FL 33418
PHONE: 561-744-3424

CERTIFICATION
NOV 06 2013
WARREN W. SCHAEFER, P.E. NO. 44135

DRAWING NO. 1632
REV. B
SHEET NO. 9 OF 38

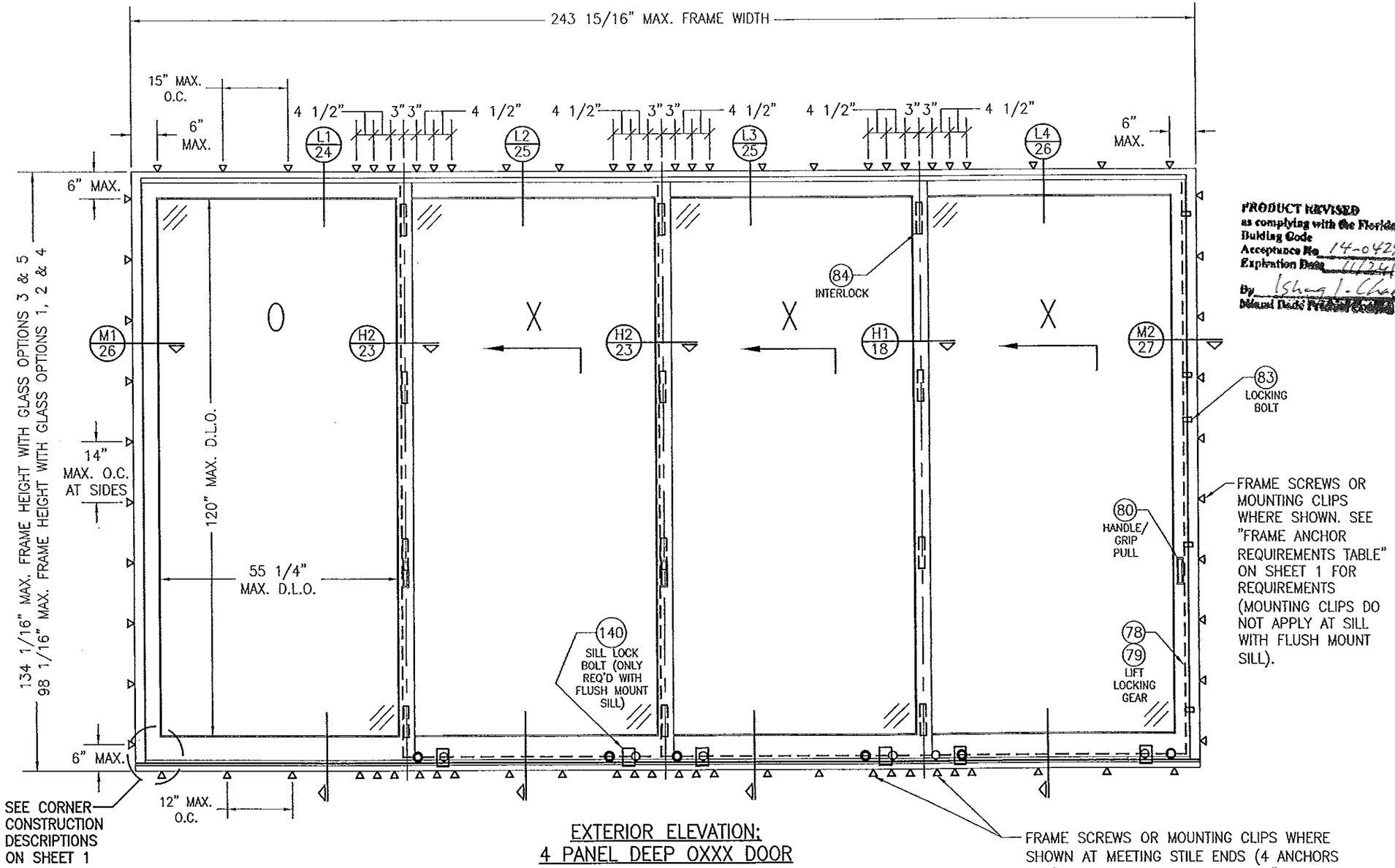


FRAME SCREWS OR MOUNTING CLIPS WHERE SHOWN AT MEETING STILE ENDS (4 ANCHORS REQ'D WHEN FRAME HEIGHT IS 100" OR LESS OR PANEL WIDTHS ARE 36" OR LESS; 6 ANCHORS REQ'D OTHERWISE). SEE "FRAME ANCHOR REQUIREMENTS TABLE" ON SHEET 1 FOR REQUIREMENTS (MOUNTING CLIPS DO NOT APPLY WITH FLUSH MOUNT SILL).

## EXTERIOR ELEVATION: 4 PANEL DEEP OXXX DOOR

SCALE: 1/2" = 1'-0"

SEE APPROVED CONFIGURATIONS ON SHEET 13 FOR ADDITIONAL 4-DEEP PANEL CONFIGURATIONS

FOR SIMPLIFICATION, ONLY FRAME & SASH PROJECTION LINES ARE SHOWN FOR THESE ELEVATIONS

PRODUCT REVISED
as complying with the Florida Building Code
Acceptance No. 14-0429.06
Expiration Date 11/24/15
By Ishwar L. Chandak
Miami Dade Product Control

PRODUCT REVISED
as complying with the Florida Building Code
Acceptance No. 13-0717.10
Expiration Date 11/24/15
By Ishwar L. Chandak
Miami Dade Product Control

WARREN W. SCHAEFER LICENSE No 44135 STATE OF FLORIDA PROFESSIONAL ENGINEER

NOV 06 2013

WARREN W. SCHAEFER, P.E.
P.E. NO. 44135

| NO. | REVISION DESCRIPTION | BY | DATE |
|---|---|---|---|
| | | | |

DRAWN BY: W.R.M. | CHECKED BY: W.W.S.
PLOT: 1=24 | DATE: 04/04/09

DRAWING TITLE
LIFT & SLIDE BRONZE CLAD SLIDING GLASS IMPACT DOORS

MANUFACTURER
PEETZ WINDOWS & DOORS
15951 S.W. 41ST STREET; SUITE 150
WESTON, FL 33331
954-659-3887

CONSULTANTS
W. W. SCHAEFER ENGINEERING & CONSULTING, P.A. (CA 6809)
7480 150TH COURT NORTH
PALM BEACH GARDENS, FL 33418
PHONE: 561-744-3424

CERTIFICATION

DRAWING NO. 1632 | REV. B

SHEET NO. 10 OF 38

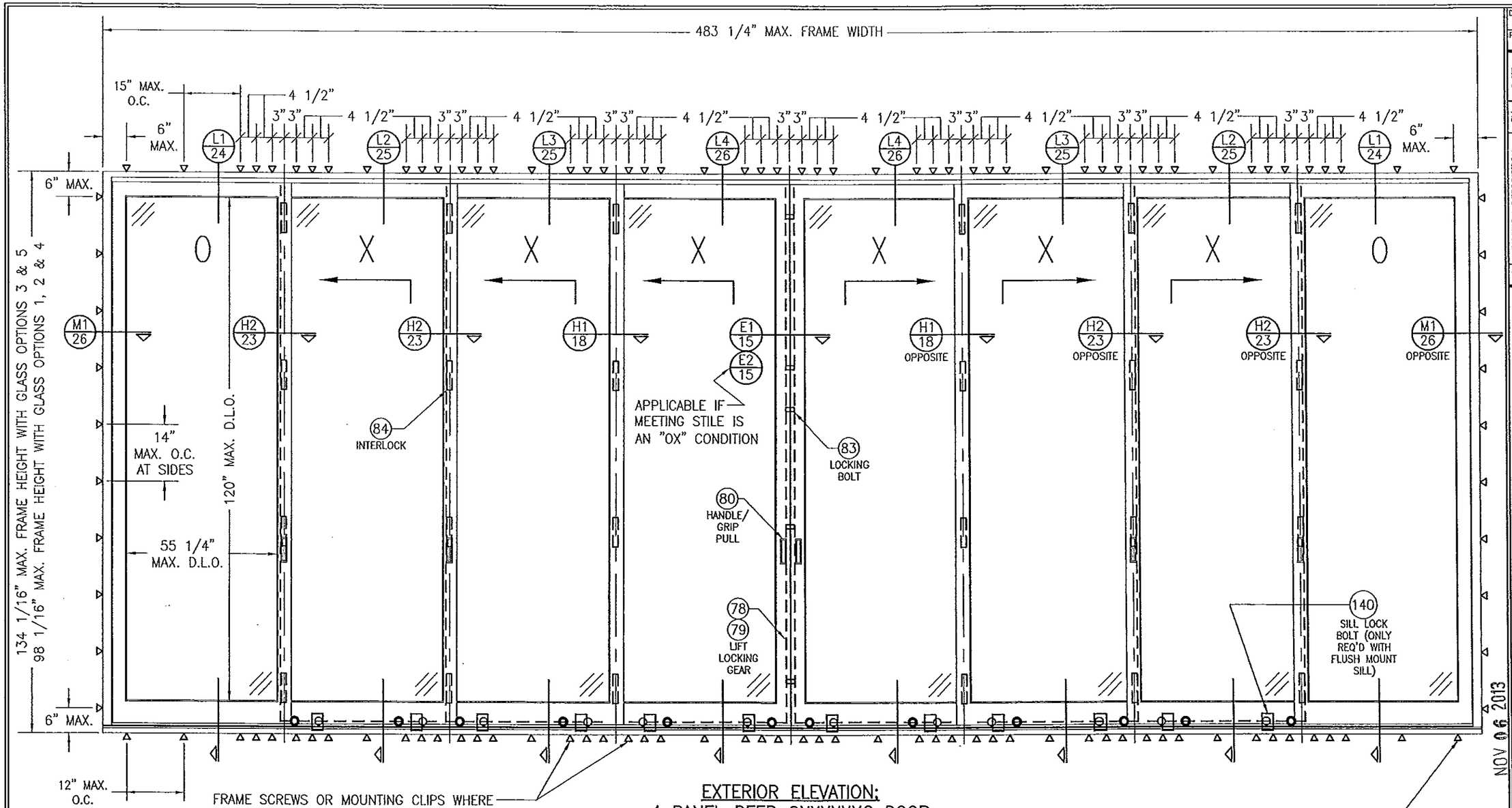


FRAME SCREWS OR MOUNTING CLIPS WHERE SHOWN AT MEETING STILE ENDS (4 ANCHORS REQ'D WHEN FRAME HEIGHT IS 100" OR LESS OR PANEL WIDTHS ARE 36" OR LESS; 6 ANCHORS REQ'D OTHERWISE). SEE "FRAME ANCHOR REQUIREMENTS TABLE" ON SHEET 1 FOR REQUIREMENTS (MOUNTING CLIPS DO NOT APPLY WITH FLUSH MOUNT SILL).

## EXTERIOR ELEVATION; 4 PANEL DEEP OXXXXXXO DOOR

SCALE: N.T.S.

SEE APPROVED CONFIGURATIONS ON SHEET 13 FOR ADDITIONAL 4-DEEP PANEL CONFIGURATIONS

FOR SIMPLIFICATION, ONLY FRAME & SASH PROJECTION LINES ARE SHOWN FOR THESE ELEVATIONS

PRODUCT REVISED as complying with the Florida Building Code Acceptance No. 14-0429.06 Expiration Date 11/24/15 By Vishwas J. Chanda Miami-Dade Product Control

FRAME SCREWS OR MOUNTING CLIPS WHERE SHOWN. SEE "FRAME ANCHOR REQUIREMENTS TABLE" ON SHEET 1 FOR REQUIREMENTS (MOUNTING CLIPS DO NOT APPLY AT SILL WITH FLUSH MOUNT SILL).

PRODUCT REVISED as complying with the Florida Building Code Acceptance No. 13-0717.10 Expiration Date 11/24/15 By Vishwas J. Chanda Miami-Dade Product Control

NOV 06 2013

| DRAWN BY: W.R.W. | CHECKED BY: W.W.S. |
|---|---|
| PLOT: 1=24 | DATE: 04/04/09 |

| NO. | REVISION DESCRIPTION | BY | DATE |
|---|---|---|---|
| | | | |

DRAWING TITLE: LIFT & SLIDE BRONZE CLAD SLIDING GLASS IMPACT DOORS

MANUFACTURER: PEETZ WINDOWS & DOORS, 15951 S.W. 41ST STREET; SUITE 150, WESTON, FL 33331, 954-659-3887

CONSULTANTS: W. W. SCHAEFER ENGINEERING & CONSULTING, P.A. (CA 6809), 7480 150TH COURT NORTH, PALM BEACH GARDENS, FL 33418, PHONE: 561-744-3424

CERTIFICATION: WARREN W. SCHAEFER, STATE OF FLORIDA, LICENSE No. 44135, PROFESSIONAL ENGINEER

NOV 06 2013

WARREN W. SCHAEFER, P.E. P.E. NO. 44135

| DRAWING NO. | REV. |
|---|---|
| 1632 | B |

SHEET NO. 11 OF 38

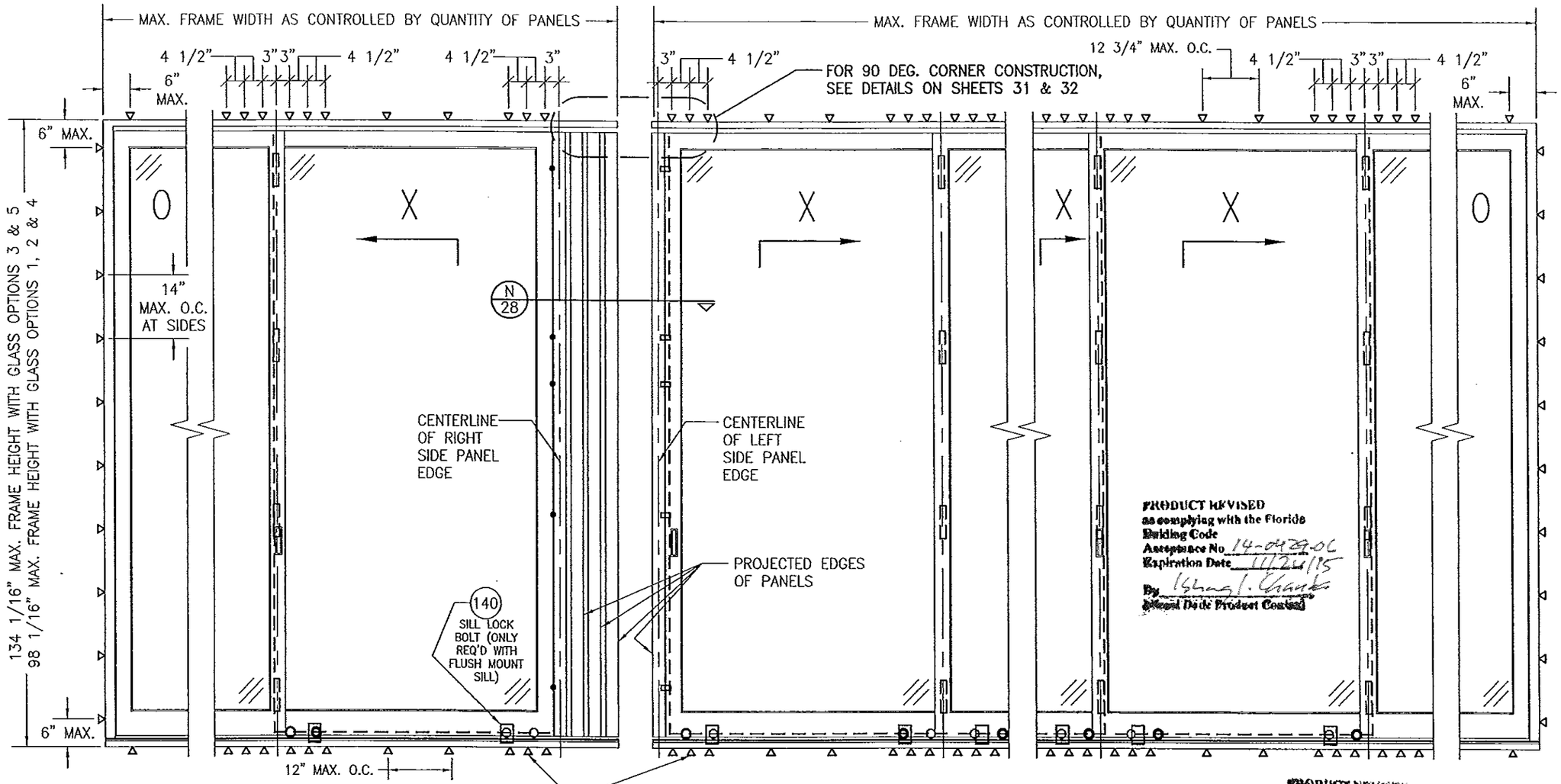


EXTERIOR ELEVATION "A–A":
2 PANEL DEEP OX DOOR
SCALE: 1/2" = 1'–0"

EXTERIOR ELEVATION "B–B":
4 PANEL DEEP XXXO DOOR
SCALE: 1/2" = 1'–0"

PRODUCT REVISED
as complying with the Florida Building Code
Acceptance No. 14-0429.06
Expiration Date 11/24/15
By
Miami Dade Product Control

PRODUCT REVISED
as complying with the Florida Building Code
Acceptance No. 13-0717.10
Expiration Date 11/24/15
By
Miami Dade Product Control

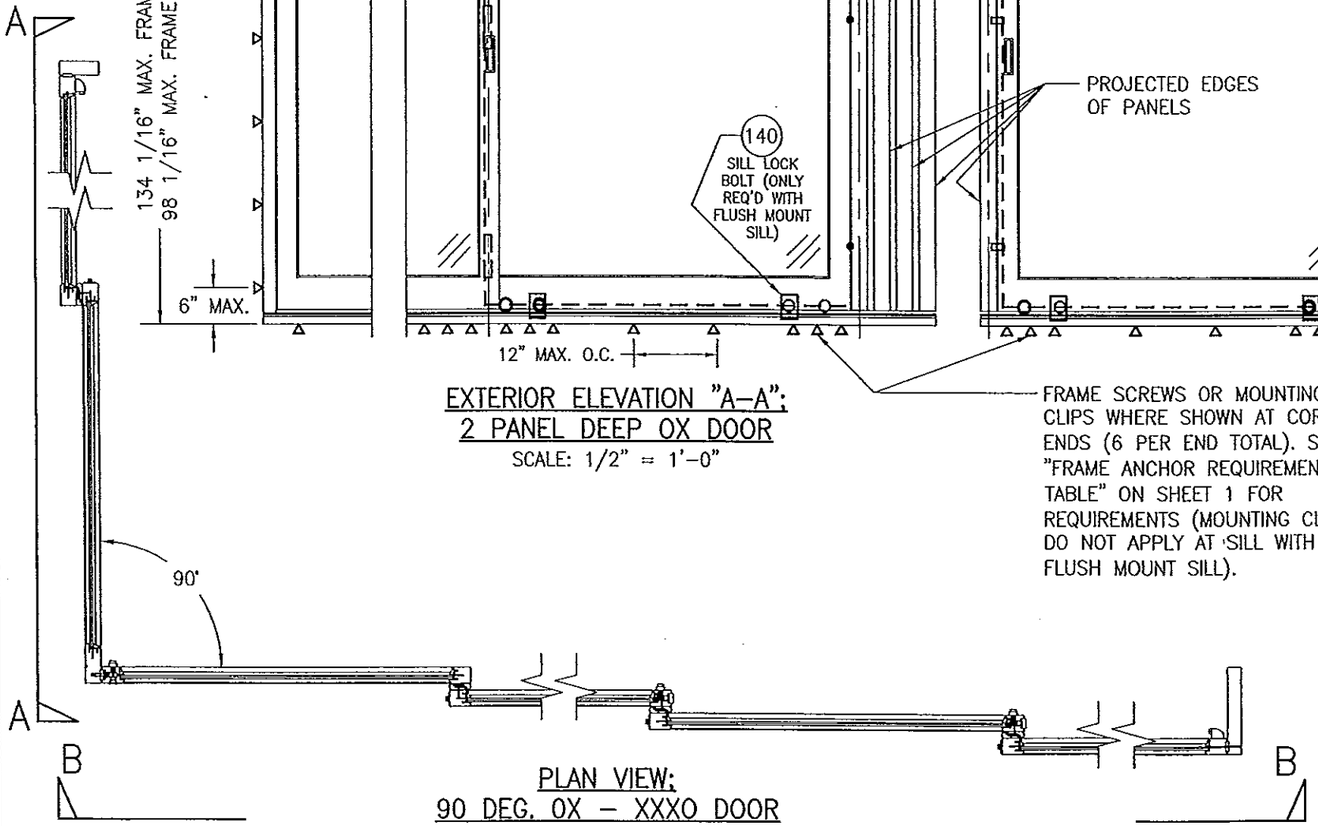


PLAN VIEW;
90 DEG. OX – XXXO DOOR
SCALE: 1/4" = 1'–0"

## 90 DEG. UNIT NOTES:

1. FOR ALL DETAIL NOT SHOWN, SEE INDIVIDUAL UNIT ELEVATIONS.
2. OX–XXXO UNIT IS SHOWN. SEE APPROVED CONFIGURATIONS ON SHEET 13 FOR ALL APPLICABLE CONDITIONS AT EITHER SIDE OF THE CORNER.
3. 90 DEGREE CONDITION ONLY APPLIES WHEN FLUSH MOUNT SILL IS USED (NOT APPLICABLE WITH STANDARD SLOPED SILL).

WARREN W. SCHAEFER LICENSE No 44135 STATE OF FLORIDA PROFESSIONAL ENGINEER

| DRAWN BY: W.R.W. | CHECKED BY: W.W.S. |
|---|---|
| PLOT: 1=24 | DATE: 04/04/09 |

| NO. | REVISION DESCRIPTION | BY | DATE |
|---|---|---|---|
| | | | |

DRAWING TITLE
LIFT & SLIDE BRONZE CLAD SLIDING GLASS IMPACT DOORS

MANUFACTURER
PEETZ WINDOWS & DOORS
15951 S.W. 41ST STREET; SUITE 150
WESTON, FL 33331
954-659-3887

CONSULTANTS
W. W. SCHAEFER ENGINEERING & CONSULTING, P.A. (CA 6809)
7480 150TH COURT NORTH
PALM BEACH GARDENS, FL 33418
PHONE: 561-744-3424

CERTIFICATION
NOV 06 2013
WARREN W. SCHAEFER, P.E.
P.E. NO. 44135

DRAWING NO. 1632
REV. B
SHEET NO. 12 OF 38

# APPROVED CONFIGURATIONS

## CONFIGURATIONS WITHOUT POCKETS

### 2-PANEL DEEP CONDITIONS

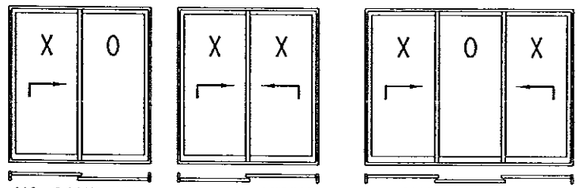


XO CONDITION — XX CONDITION — OXO CONDITION

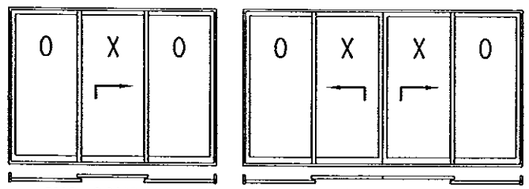


OXO CONDITION — OXXO CONDITION

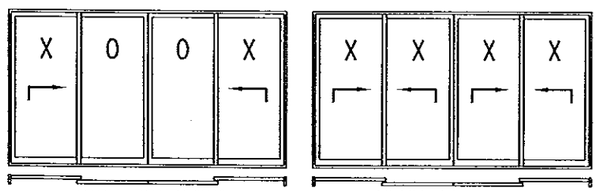


XOOX CONDITION — XXXX CONDITION

### 3-PANEL DEEP CONDITIONS

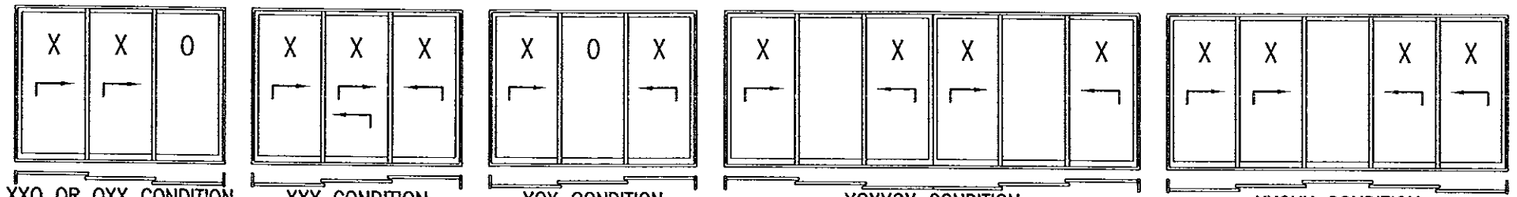


XXO OR OXX CONDITION — XXX CONDITION — XOX CONDITION — XOXXOX CONDITION — XXOXX CONDITION

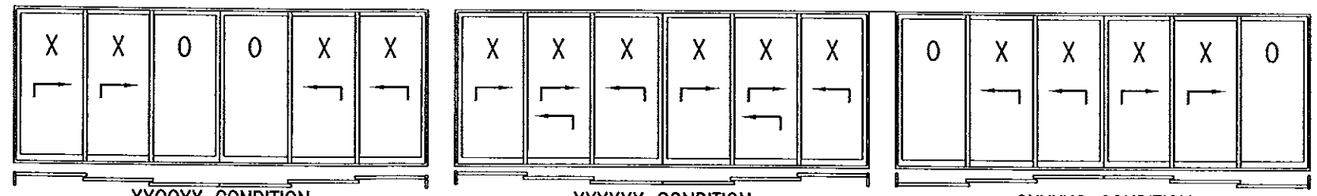


XXOOXX CONDITION — XXXXXX CONDITION — OXXXXO CONDITION

### 4-PANEL DEEP CONDITIONS

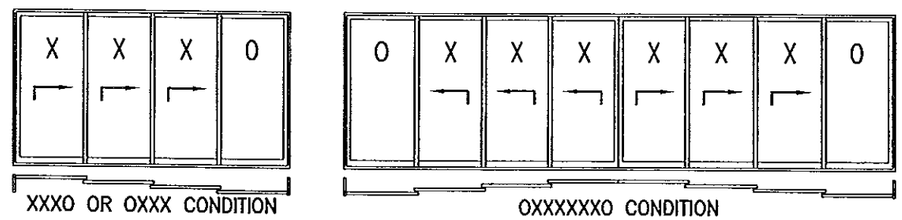


XXXO OR OXXX CONDITION — OXXXXXXO CONDITION

CONDITIONS SHOWN ARE THE MAJORITY OF THOSE USED. OTHER CONDITIONS OF "O" & "X" PANELS APPLY PROVIDING THEY ARE WITHIN THE SCOPE OF THE DETAILS WITHIN THIS DRAWING.

WHILE UP TO 4-PANEL DEEP CONDITIONS IN ONE OPENING ARE SHOWN, THERE IS NO LIMIT TO THE NUMBER OF PANELS IN DEPTH WHEN THE FLUSH MOUNT SILL IS USED (OVER 4-PANELS DEEP IS NOT APPLICABLE WHEN THE STANDARD SILL IS USED). MORE THAN 4-PANEL DEEP CONDITIONS WILL REQUIRE ONE OR MORE ADDITIONAL ROWS OF FRAME ANCHORS AND SHALL BE SUBJECT TO SEPERATE ENGINEER'S REVIEW AND CERTIFICATION.

## CONFIGURATIONS WITH POCKETS

### 1-PANEL DEEP CONDITIONS

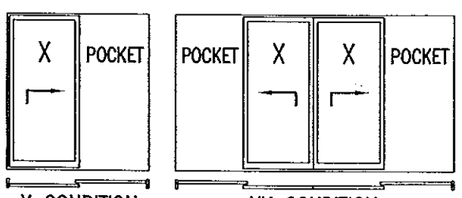


X CONDITION — XX CONDITION

### 2-PANEL DEEP CONDITIONS

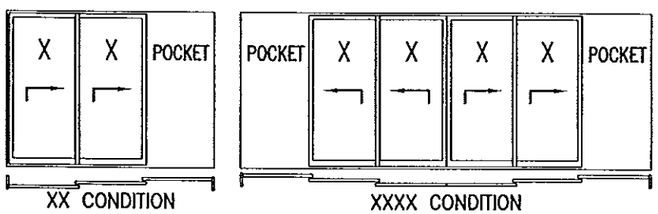


XX CONDITION — XXXX CONDITION

### 3-PANEL DEEP CONDITIONS

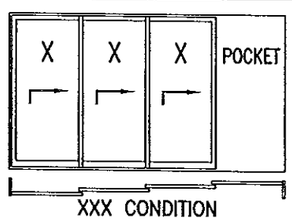


XXX CONDITION

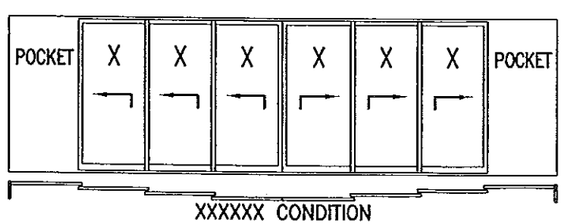


XXXXXX CONDITION

## 90 DEG. CONFIGURATIONS

ALL CONFIGURATIONS SHOWN ON THIS SHEET APPLY TO EITHER SIDE OF A CORNER UNIT EXCEPT THAT A POCKET IS NOT APPLICABLE AT THE 90 DEG. CORNER.

PRODUCT REVISED
In complying with the Florida Building Code
Acceptance No. 13-0712.10
Expiration Date 11/24/15
By Shane L. Chanda
Board Body Product Control

PRODUCT REVISED
In complying with the Florida Building Code
Acceptance No. 14-0429.06
Expiration Date 11/24/15
By Shane L. Chanda
Board Body Product Control

WARREN W. SCHAEFER LICENSE No 44135 STATE OF FLORIDA PROFESSIONAL ENGINEER

CERTIFICATION
NOV 06 2013
WARREN W. SCHAEFER P.E. P.E. NO. 44135

| NO. | REVISION DESCRIPTION | BY | DATE |
|---|---|---|---|
| | | | |

DRAWN BY: W.R.M. | CHECKED BY: W.W.S.
PLOT: 1=24 | DATE: 04/04/09

DRAWING TITLE
LIFT & SLIDE BRONZE CLAD SLIDING GLASS IMPACT DOORS

MANUFACTURER
PEETZ WINDOWS & DOORS
15951 S.W. 41ST STREET; SUITE 150
WESTON, FL 33331
954-659-3887

CONSULTANTS
W. W. SCHAEFER ENGINEERING & CONSULTING, P.A. (CA 6809)
7480 150TH COURT NORTH
PALM BEACH GARDENS, FL 33418
PHONE: 561-744-3424

DRAWING NO. 1632 | REV. B
SHEET NO. 13 OF 38

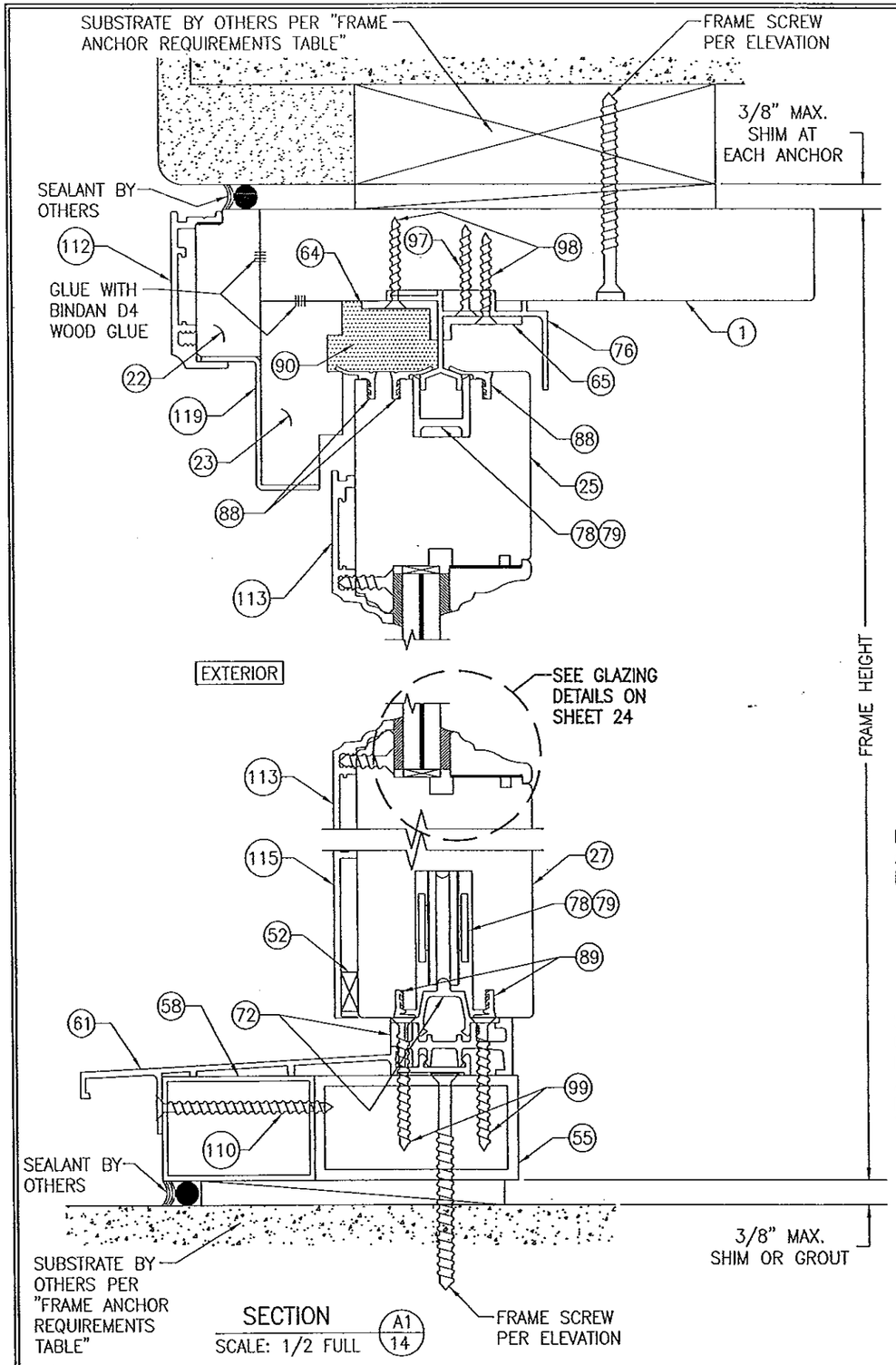


SECTION A1/14
SCALE: 1/2 FULL

(STANDARD SILL CONDITION SHOWN. FOR ALTERNATE FLUSH MOUNT SILL CONDITION, SEE "ALTERNATE FLUSH MOUNT SILL DETAILS" ON SHEETS 28–31)

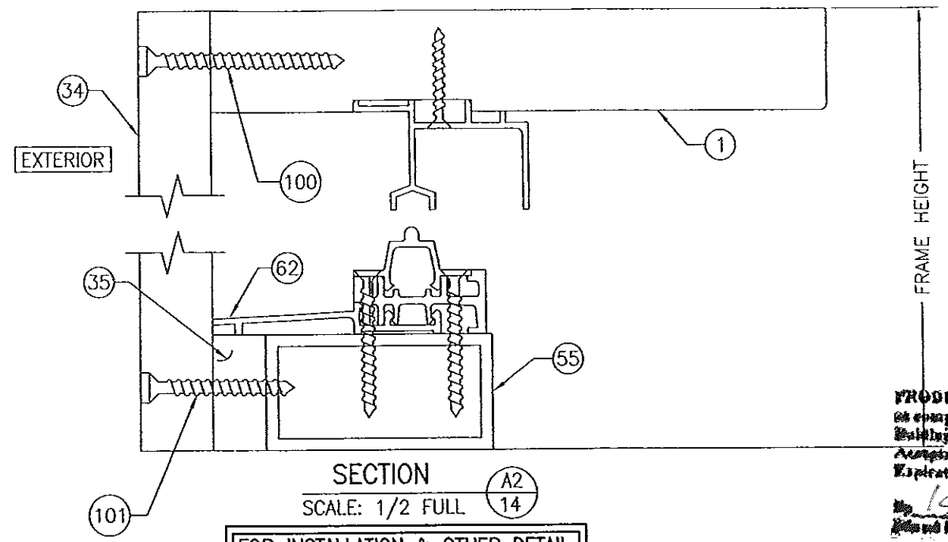


SECTION A2/14
SCALE: 1/2 FULL

FOR INSTALLATION & OTHER DETAIL NOT SHOWN, SEE SECTION A1/14

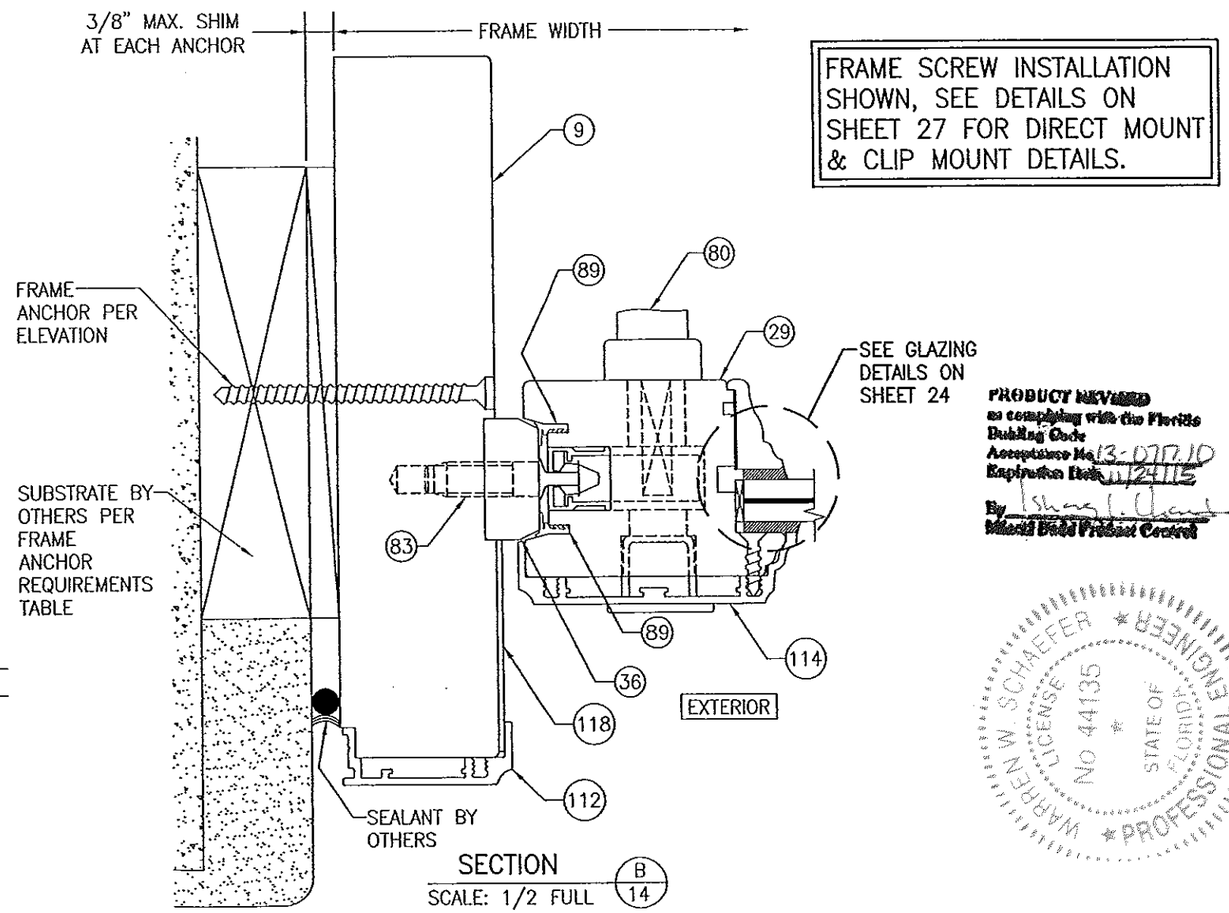


SECTION B/14
SCALE: 1/2 FULL

FRAME SCREW INSTALLATION SHOWN, SEE DETAILS ON SHEET 27 FOR DIRECT MOUNT & CLIP MOUNT DETAILS.

PRODUCT REVISED
as complying with the Florida Building Code
Acceptance No. 14-0429.06
Expiration Date 11/24/15
By Ishwar L. Chawla
Miami-Dade Product Control

PRODUCT REVISED
as complying with the Florida Building Code
Acceptance No. 13-0717.10
Expiration Date 11/24/15
By Ishwar L. Chawla
Miami-Dade Product Control

WARREN W. SCHAEFER LICENSE No 44135 STATE OF FLORIDA PROFESSIONAL ENGINEER

| NO. | REVISION DESCRIPTION | BY | DATE |
|---|---|---|---|
| | | | |

DRAWN BY: W.R.M. | CHECKED BY: W.W.S.
PLOT: 1=24 | DATE: 04/04/09

DRAWING TITLE: LIFT & SLIDE BRONZE CLAD SLIDING GLASS IMPACT DOORS

MANUFACTURER: PEETZ WINDOWS & DOORS, 15951 S.W. 41ST STREET; SUITE 150, WESTON, FL 33331, 954-659-3887

CONSULTANTS: W. W. SCHAEFER ENGINEERING & CONSULTING, P.A. (CA 6809), 7480 150TH COURT NORTH, PALM BEACH GARDENS, FL 33418, PHONE: 561-744-3424

CERTIFICATION: NOV 06 2013, WARREN W. SCHAEFER, P.E. NO. 44135

DRAWING NO. 1632 | REV. B

SHEET NO. 14 OF 38

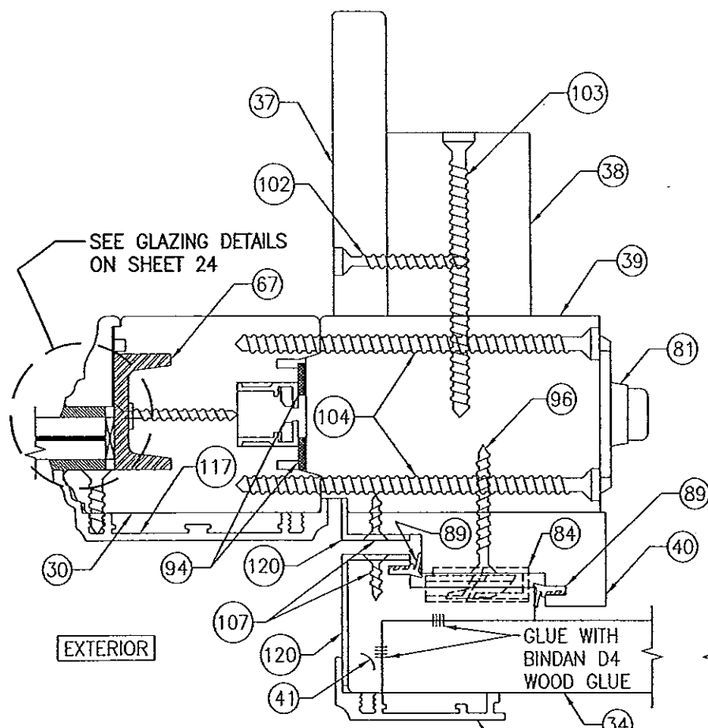


SECTION C1/15
SCALE: 1/2 FULL

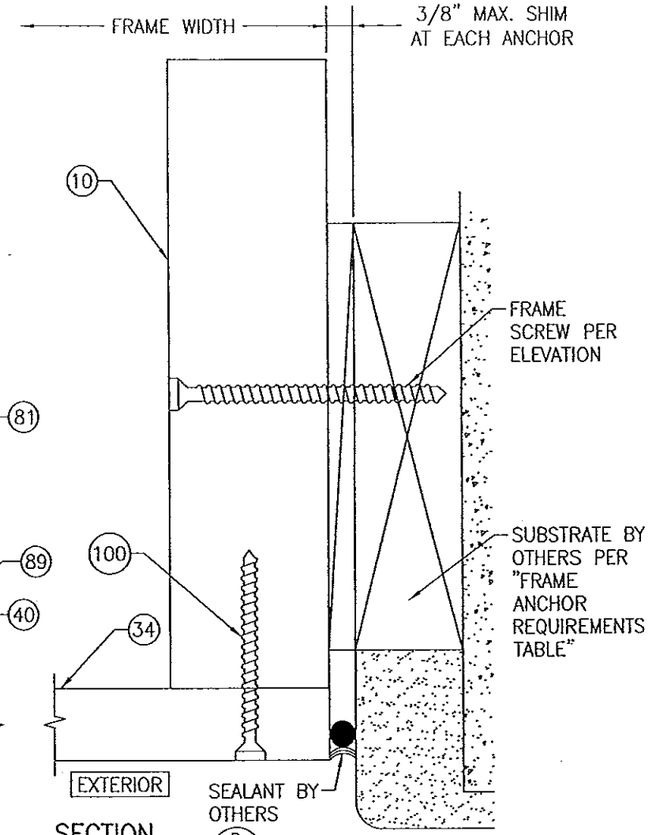


SECTION D/15
SCALE: 1/2 FULL

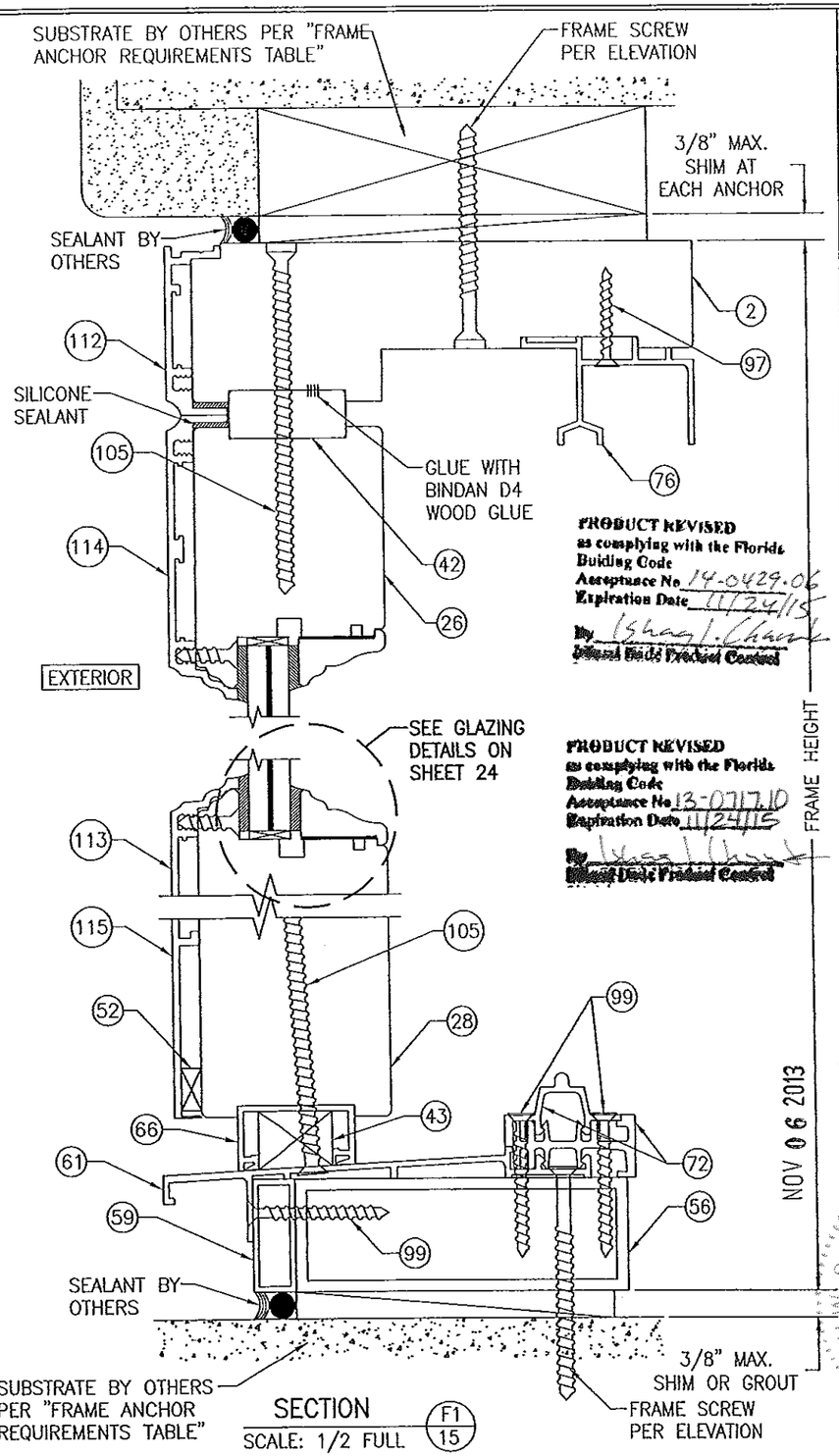


PRODUCT REVISED
as complying with the Florida Building Code
Acceptance No. 14-0429.06
Expiration Date 11/24/15
By Ishaq I. Chaudhry
Miami-Dade Product Control

PRODUCT REVISED
as complying with the Florida Building Code
Acceptance No. 13-0717.10
Expiration Date 11/24/15
By Ishaq I. Chaudhry
Miami-Dade Product Control

SECTION F1/15
SCALE: 1/2 FULL

(STANDARD SILL CONDITION SHOWN. FOR ALTERNATE FLUSH MOUNT SILL CONDITION, SEE "ALTERNATE FLUSH MOUNT SILL DETAILS" ON SHEETS 28–31)

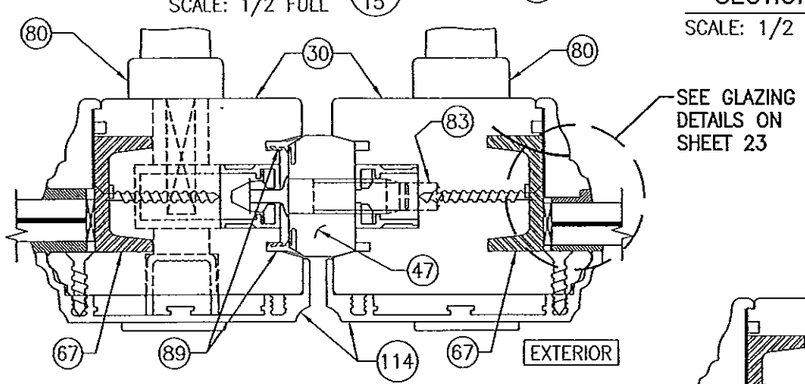


SECTION E1/15
SCALE: 1/2 FULL
(APPLICABLE WITH "XX" MEETING STILE CONDITIONS)

FRAME SCREW INSTALLATION SHOWN, SEE DETAILS ON SHEET 27 FOR DIRECT MOUNT & CLIP MOUNT DETAILS.

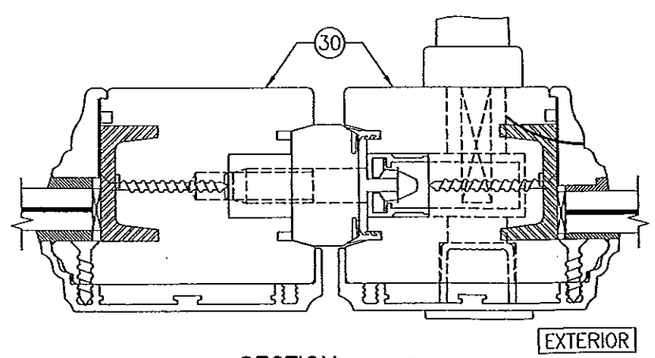


SECTION E2/15
SCALE: 1/2 FULL
(APPLICABLE WITH "OX" MEETING STILE CONDITIONS)
(FOR DETAIL NOT SHOWN, SEE SECTION E1/15)

NOV 06 2013

| DRAWN BY: W.R.V. | CHECKED BY: W.W.S. |
|---|---|
| PLOT: 1=24 | DATE: 04/04/09 |

| NO. | REVISION DESCRIPTION | BY | DATE |
|---|---|---|---|
| | | | |

DRAWING TITLE
LIFT & SLIDE BRONZE CLAD SLIDING GLASS IMPACT DOORS

MANUFACTURER
PEETZ WINDOWS & DOORS
15951 S.W. 41ST STREET; SUITE 150
WESTON, FL 33331
954-659-3887

CONSULTANTS
W. W. SCHAEFER ENGINEERING & CONSULTING, P.A. (CA 6809)
7480 150TH COURT NORTH
PALM BEACH GARDENS, FL 33418
PHONE: 561-744-3424

CERTIFICATION
WARREN W. SCHAEFER, P.E.
P.E. NO. 44135

| DRAWING NO. | REV. |
|---|---|
| 1632 | B |

SHEET NO. 15 OF 38

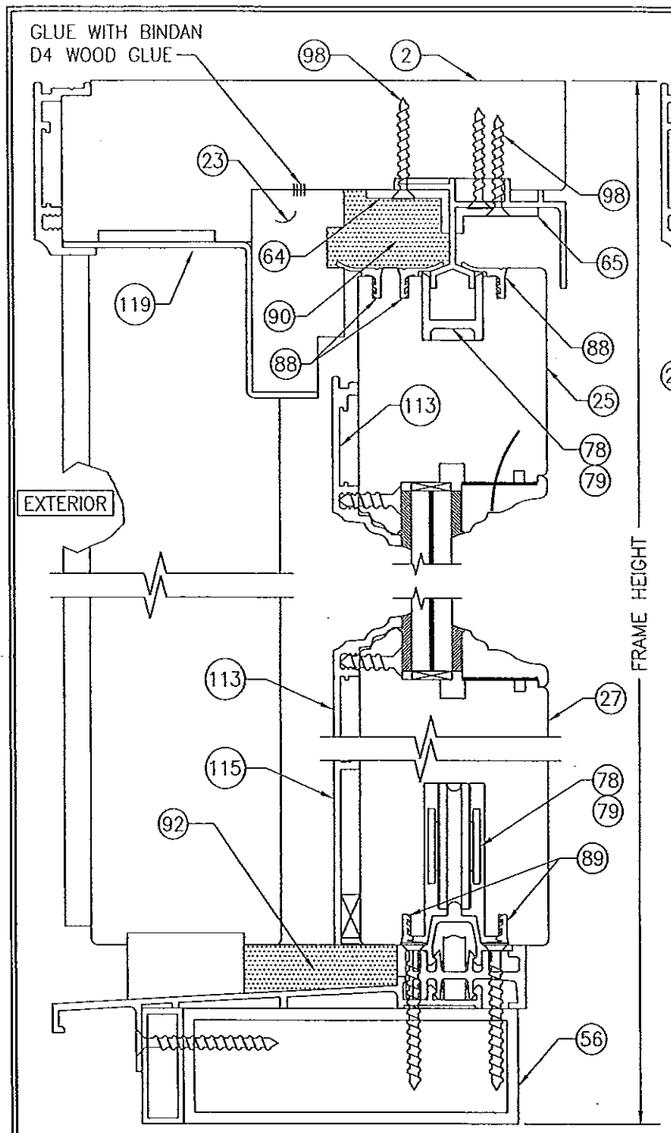


SECTION F2/16
SCALE: 1/2 FULL

FOR INSTALLATION & OTHER DETAIL NOT SHOWN, SEE SECTION F1/15

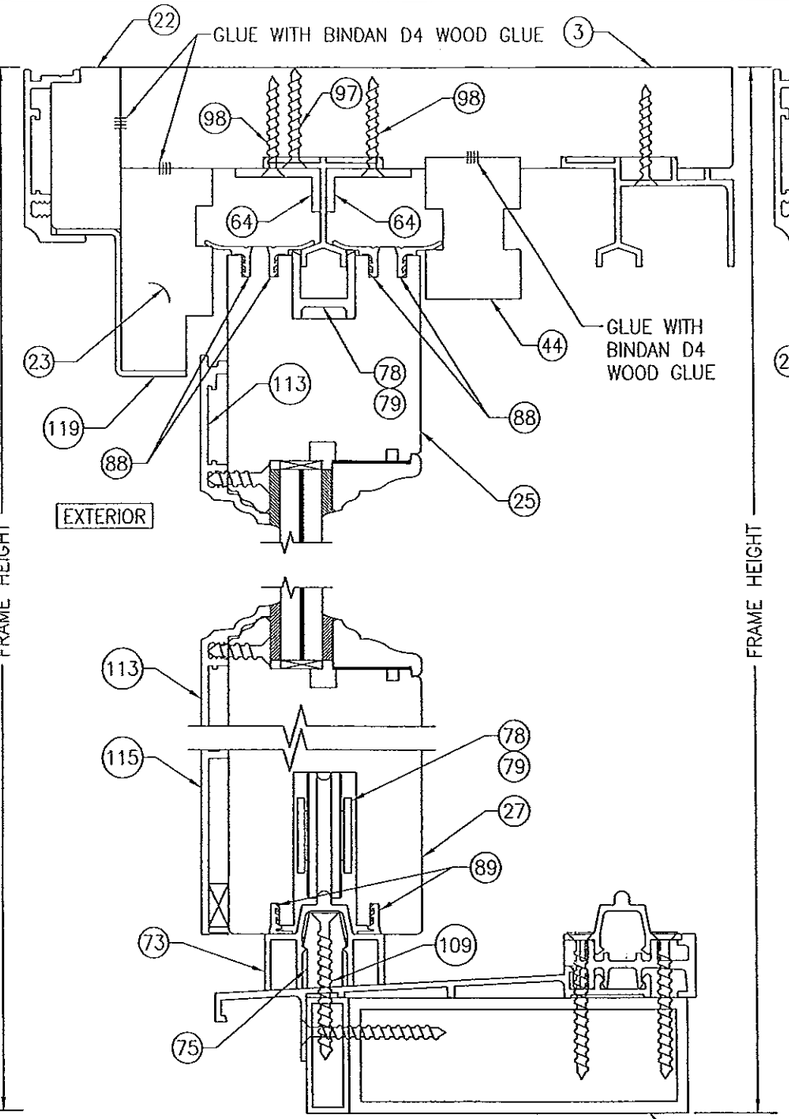


SECTION F3/16
SCALE: 1/2 FULL

FOR INSTALLATION & OTHER DETAIL NOT SHOWN, SEE SECTION F1/15

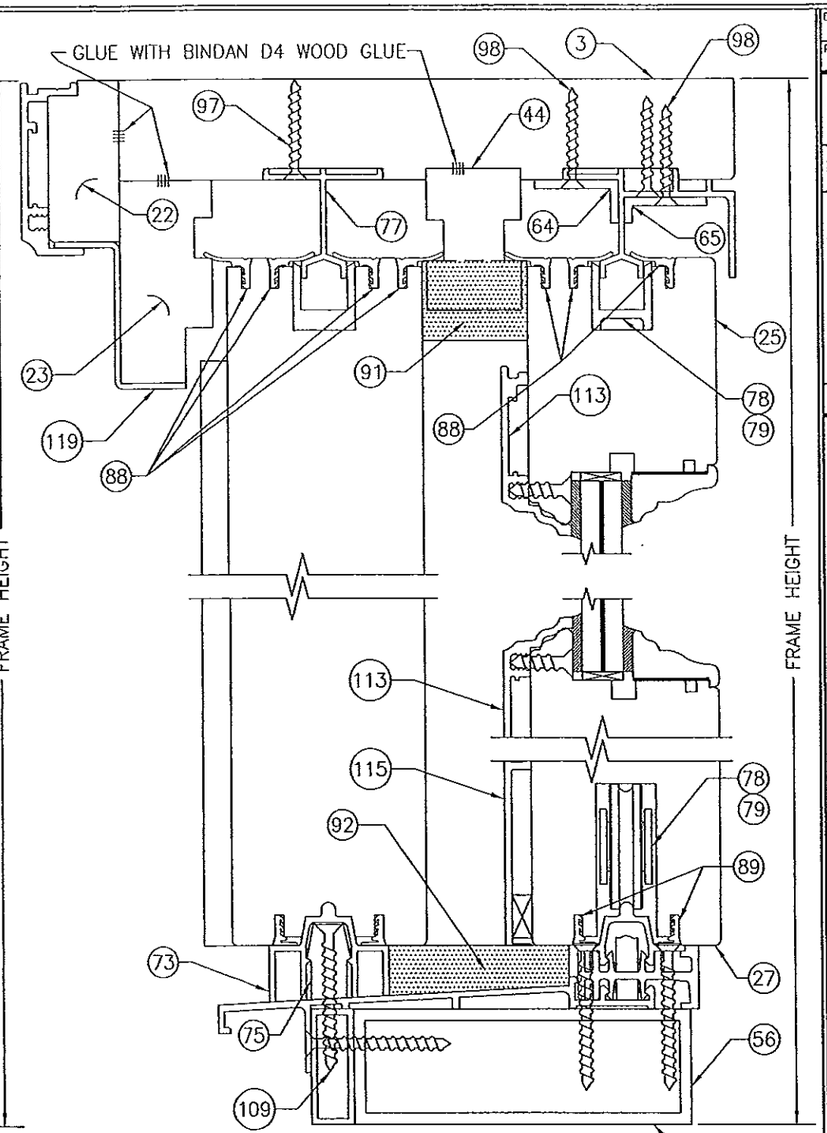


SECTION F4/16
SCALE: 1/2 FULL

FOR INSTALLATION & OTHER DETAIL NOT SHOWN, SEE SECTION F1/15

FRAME SCREW INSTALLATION SHOWN, SEE DETAILS ON SHEET 27 FOR DIRECT MOUNT & CLIP MOUNT DETAILS.

PRODUCT REVISED
as complying with the Florida Building Code
Acceptance No. 14-0429.06
Expiration Date 11/24/15
By Ishwar L. Chandra
Miami Dade Product Control

PRODUCT REVISED
as complying with the Florida Building Code
Acceptance No. 13-0717.10
Expiration Date 11/24/15
By Ishwar L. Chandra
Miami Dade Product Control

WARREN W. SCHAEFER LICENSE No. 44135 STATE OF FLORIDA PROFESSIONAL ENGINEER

| DRAWN BY: W.R.V. | CHECKED BY: W.W.S. |
|---|---|
| PLOT: 1=24 | DATE: 04/04/09 |

| NO. | REVISION DESCRIPTION | BY | DATE |
|---|---|---|---|
| | | | |

DRAWING TITLE
LIFT & SLIDE BRONZE CLAD SLIDING GLASS IMPACT DOORS

MANUFACTURER
PEETZ WINDOWS & DOORS
15951 S.W. 41ST STREET; SUITE 150
WESTON, FL 33331
954-659-3887

CONSULTANTS
W. W. SCHAEFER ENGINEERING & CONSULTING, P.A. (CA 6809)
7480 150TH COURT NORTH
PALM BEACH GARDENS, FL 33418
PHONE: 561-744-3424

CERTIFICATION
NOV 06/2013
WARREN W. SCHAEFER, P.E.
P.E. NO. 44135

DRAWING NO. 1632
REV. B
SHEET NO. 16 OF 38

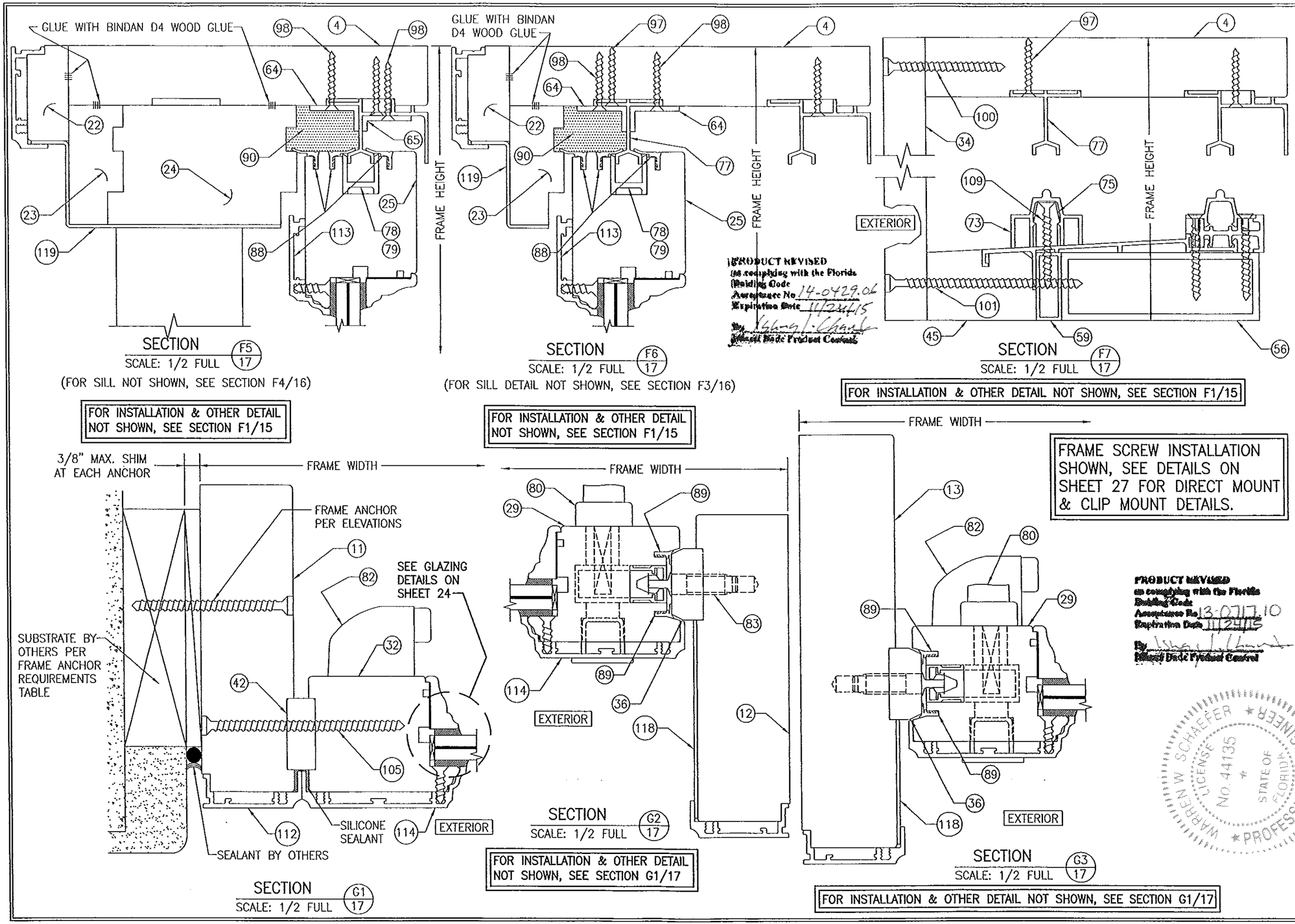


| DRAWN BY: W.R.M. | CHECKED BY: W.W.S. |
|---|---|
| PLOT: 1=24 | DATE: 04/04/09 |

| NO. | REVISION DESCRIPTION | BY | DATE |
|---|---|---|---|
| | | | |

DRAWING TITLE
LIFT & SLIDE BRONZE CLAD SLIDING GLASS IMPACT DOORS

MANUFACTURER
PEETZ WINDOWS & DOORS
15951 S.W. 41ST STREET; SUITE 150
WESTON, FL 33331
954-659-3887

CONSULTANTS
W. W. SCHAEFER ENGINEERING & CONSULTING, P.A. (CA 6809)
7480 150TH COURT NORTH
PALM BEACH GARDENS, FL 33418
PHONE: 561-744-3424

CERTIFICATION
NOV 06 2013
WARREN W. SCHAEFER, P.E.
C.E. NO. 44135

DRAWING NO. 1632 REV. B

SHEET NO. 17 OF 38

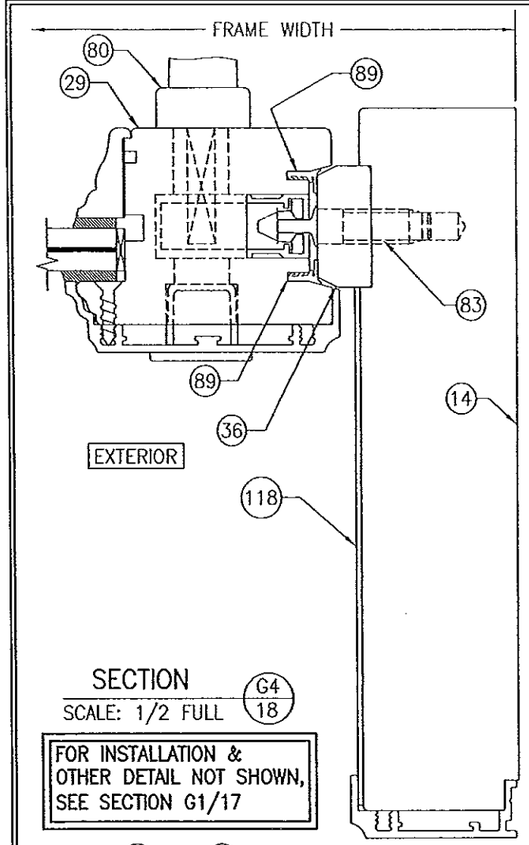


SECTION G4/18
SCALE: 1/2 FULL

FOR INSTALLATION & OTHER DETAIL NOT SHOWN, SEE SECTION G1/17

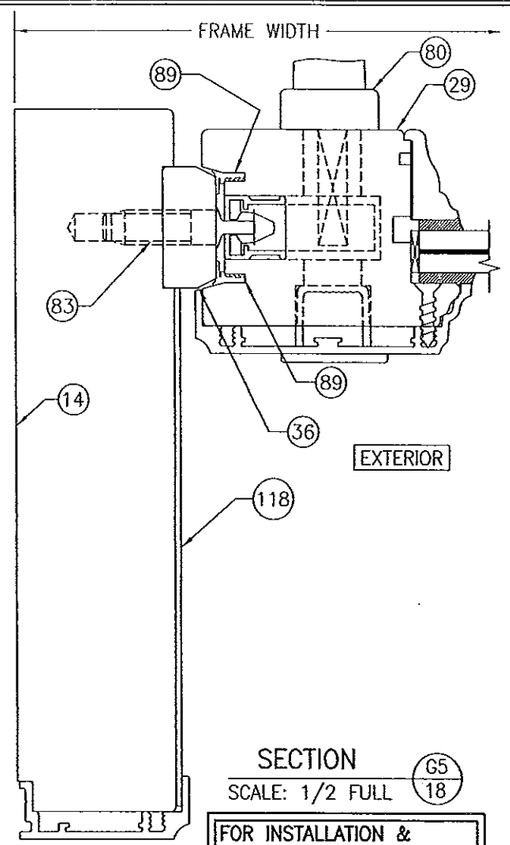


SECTION G5/18
SCALE: 1/2 FULL

FOR INSTALLATION & OTHER DETAIL NOT SHOWN, SEE SECTION G1/17

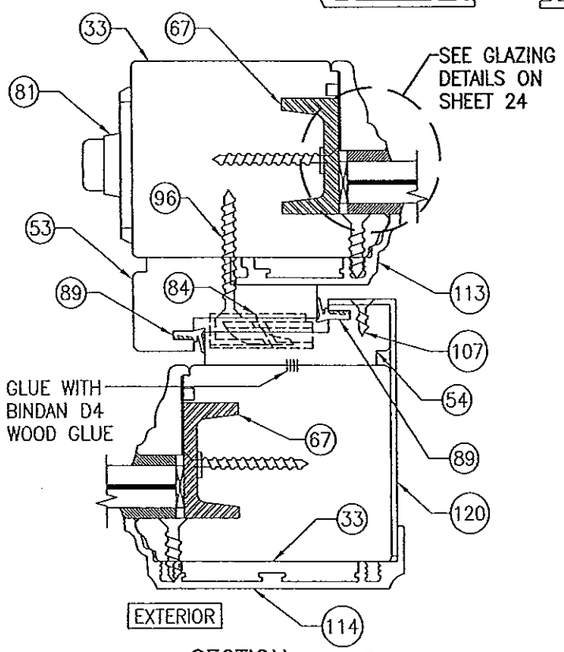


SECTION H1/18
SCALE: 1/2 FULL

FRAME SCREW INSTALLATION SHOWN, SEE DETAILS ON SHEET 27 FOR DIRECT MOUNT & CLIP MOUNT DETAILS.

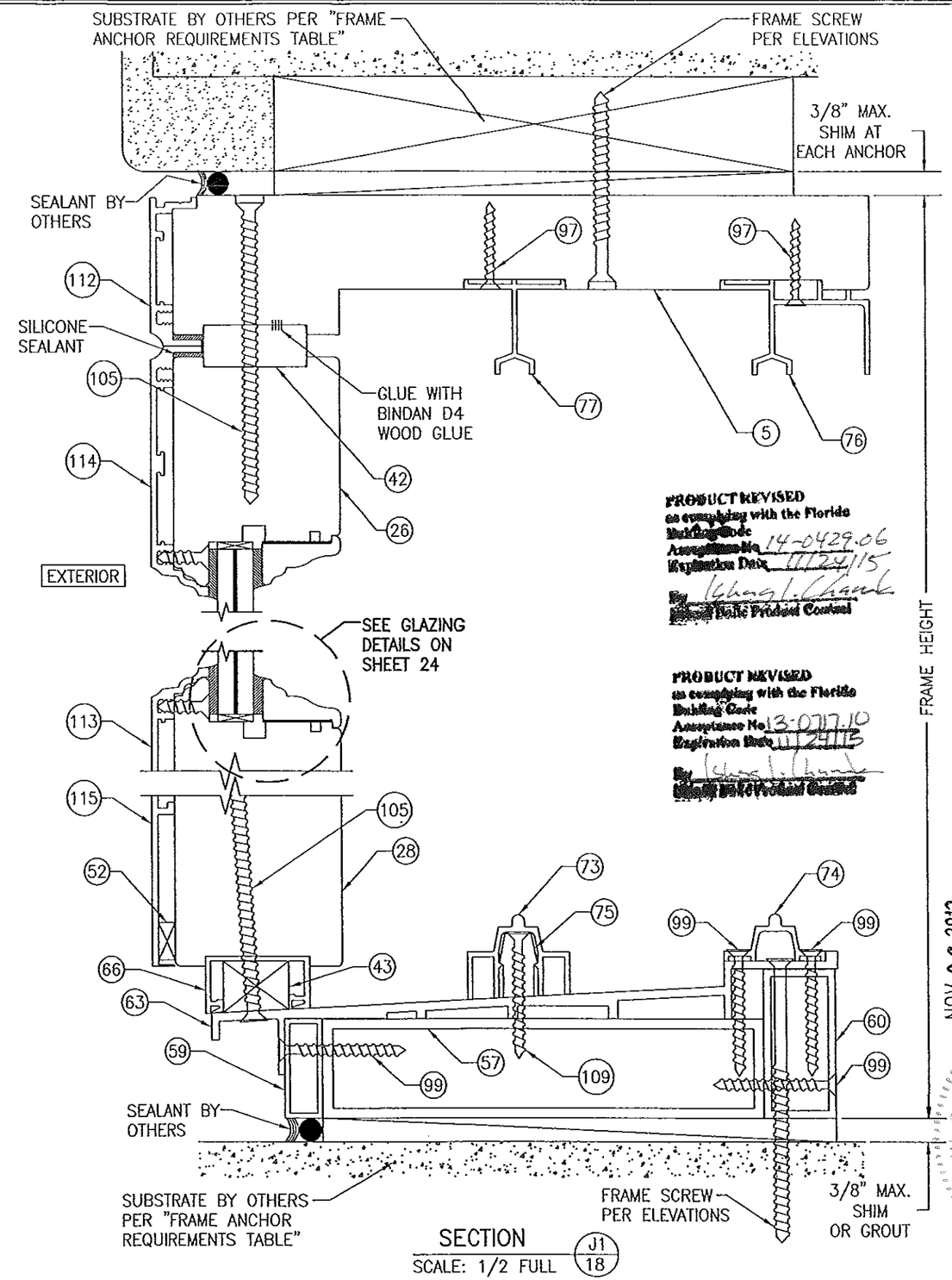


PRODUCT REVISED
as complying with the Florida Building Code
Acceptance No. 14-0429.06
Expiration Date 11/24/15
By Ichael Chaunk
Dade Product Control

PRODUCT REVISED
as complying with the Florida Building Code
Acceptance No. 13-0717.10
Expiration Date 11/24/15
By Ichael Chaunk
Dade Product Control

SECTION J1/18
SCALE: 1/2 FULL

(STANDARD SILL CONDITION SHOWN. FOR ALTERNATE FLUSH MOUNT SILL CONDITION, SEE "ALTERNATE FLUSH MOUNT SILL DETAILS" ON SHEETS 28–31)

NOV 06 2013

| DRAWN BY: W.R.M. | CHECKED BY: W.W.S. |
|---|---|
| PLOT: 1=24 | DATE: 04/04/09 |

| NO. | REVISION DESCRIPTION | BY | DATE |
|---|---|---|---|
| | | | |

DRAWING TITLE
LIFT & SLIDE BRONZE CLAD SLIDING GLASS IMPACT DOORS

MANUFACTURER
PEETZ WINDOWS & DOORS
15951 S.W. 41ST STREET; SUITE 150
WESTON, FL 33331
954-659-3887

CONSULTANTS
W. SCHAEFER ENGINEERING & CONSULTING, P.A. (CA 6809)
7480 150TH COURT NORTH
PALM BEACH GARDENS, FL 33418
PHONE: 561-744-3424

CERTIFICATION
WARREN W. SCHAEFER, P.E.
P.E. NO. 44135

DRAWING NO. 1632 REV. B
SHEET NO. 18 OF 38

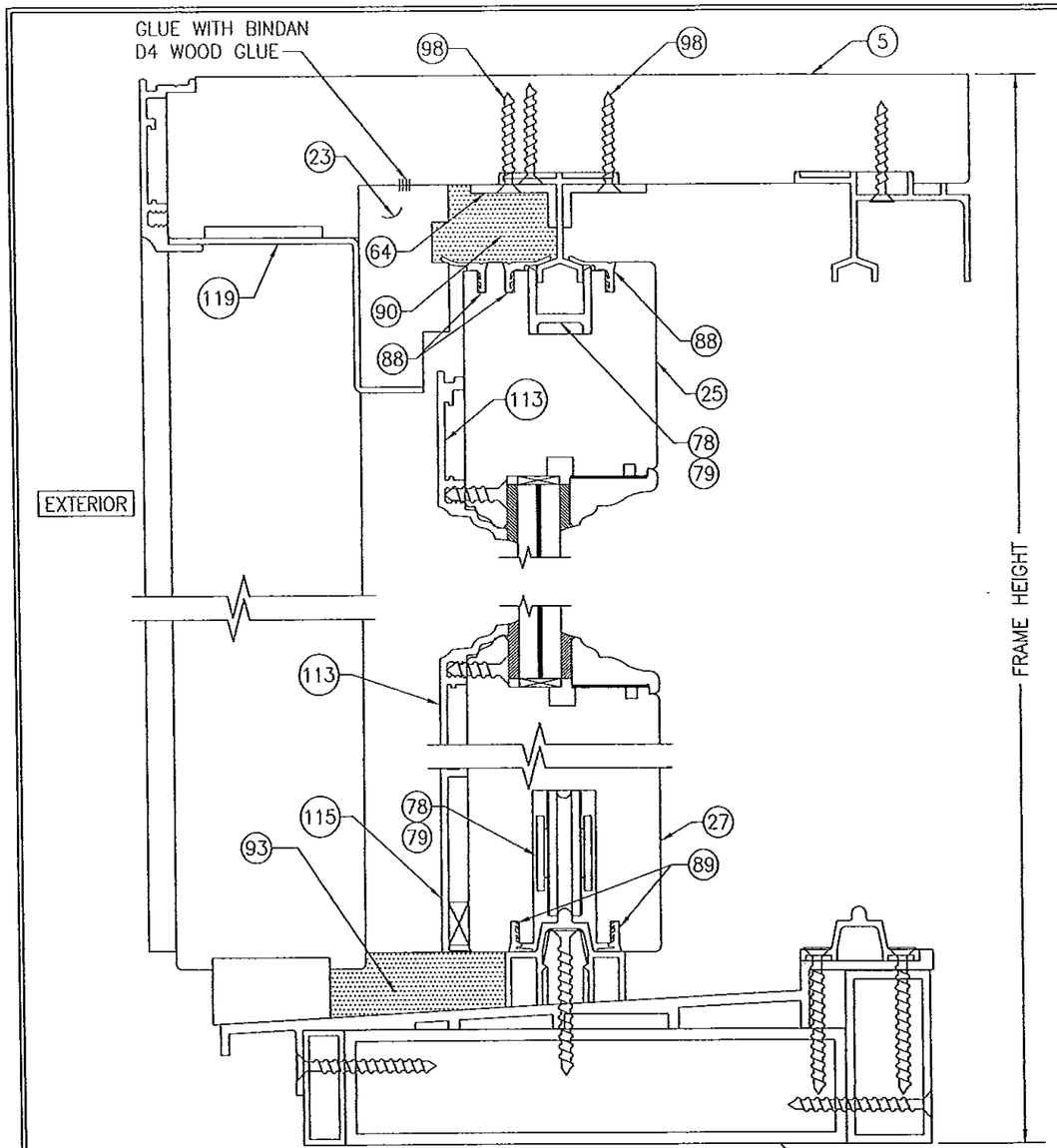


SECTION J2/19
SCALE: 1/2 FULL

FOR INSTALLATION & OTHER DETAIL NOT SHOWN, SEE SECTION J1/18

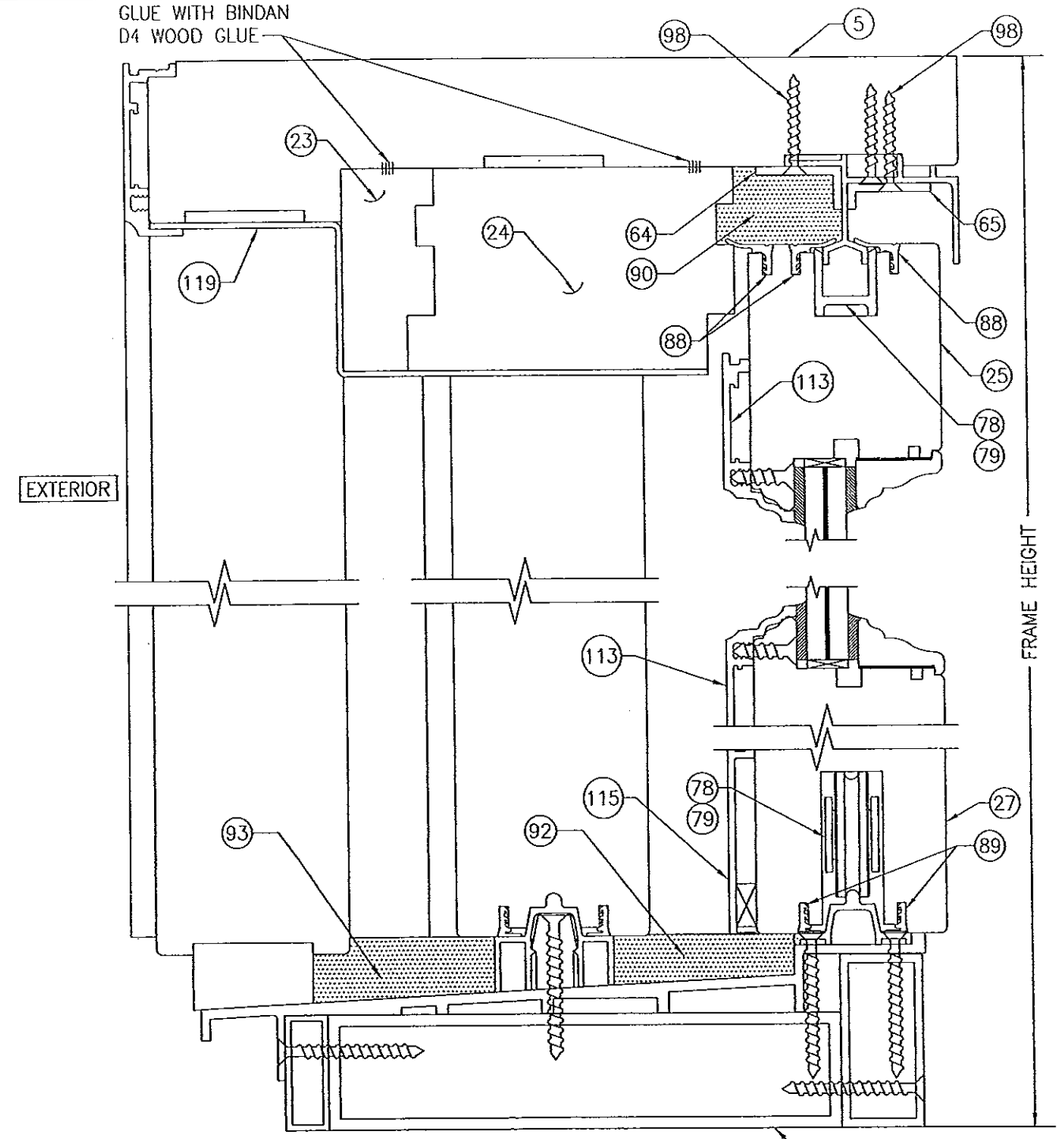


SECTION J3/19
SCALE: 1/2 FULL

FOR INSTALLATION & OTHER DETAIL NOT SHOWN, SEE SECTION J1/18

PRODUCT REVISED
in complying with the Florida
Building Code
Acceptance No. 14-0429.06
Expiration Date 11/24/15
By Ishwar L. Chand
Miami Dade Product Control

PRODUCT REVISED
in complying with the Florida
Building Code
Acceptance No. 13-0717.10
Expiration Date 11/24/15
By Ishwar L. Chand
Miami Dade Product Control

WARREN W. SCHAEFER
LICENSE No. 44135
STATE OF FLORIDA
PROFESSIONAL ENGINEER

| DRAWN BY: W.R.M. | CHECKED BY: W.W.S. |
|---|---|
| PLOT: 1=24 | DATE: 04/04/09 |

| NO. | REVISION DESCRIPTION | BY | DATE |
|---|---|---|---|
| | | | |

DRAWING TITLE
LIFT & SLIDE BRONZE CLAD SLIDING GLASS IMPACT DOORS

MANUFACTURER
PEETZ WINDOWS & DOORS
15951 S.W. 41ST STREET; SUITE 150
WESTON, FL 33331
954-659-3887

CONSULTANTS
W. W. SCHAEFER ENGINEERING & CONSULTING, P.A. (CA 6809)
7480 150TH COURT NORTH
PALM BEACH GARDENS, FL 33418
PHONE: 561-744-3424

CERTIFICATION
NOV 06 2013
WARREN W. SCHAEFER, P.E.
P.E. NO. 44135

DRAWING NO. 1632
REV. B
SHEET NO. 19 OF 38

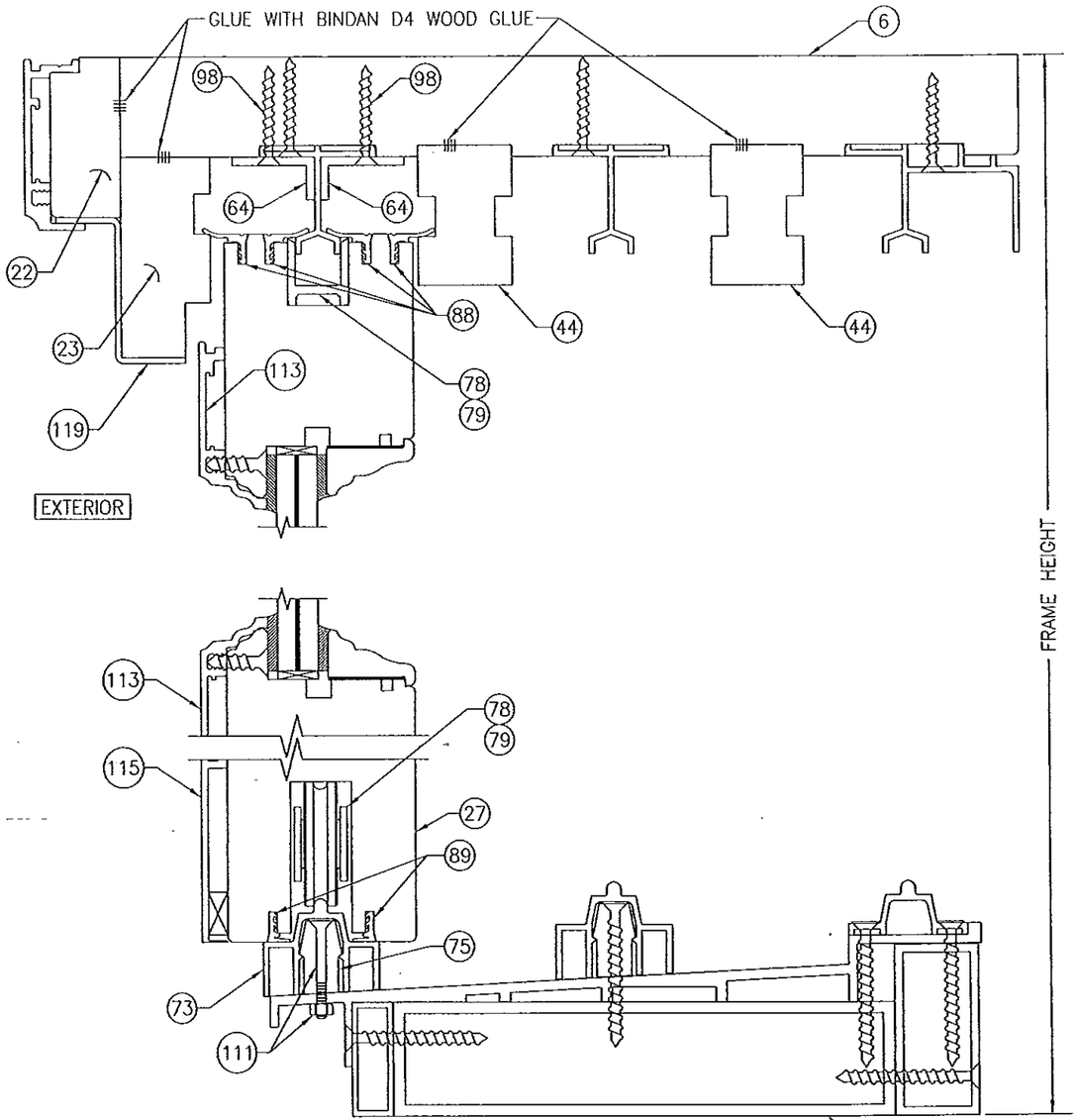


SECTION J4/20
SCALE: 1/2 FULL

FOR INSTALLATION & OTHER DETAIL NOT SHOWN, SEE SECTION J1/18

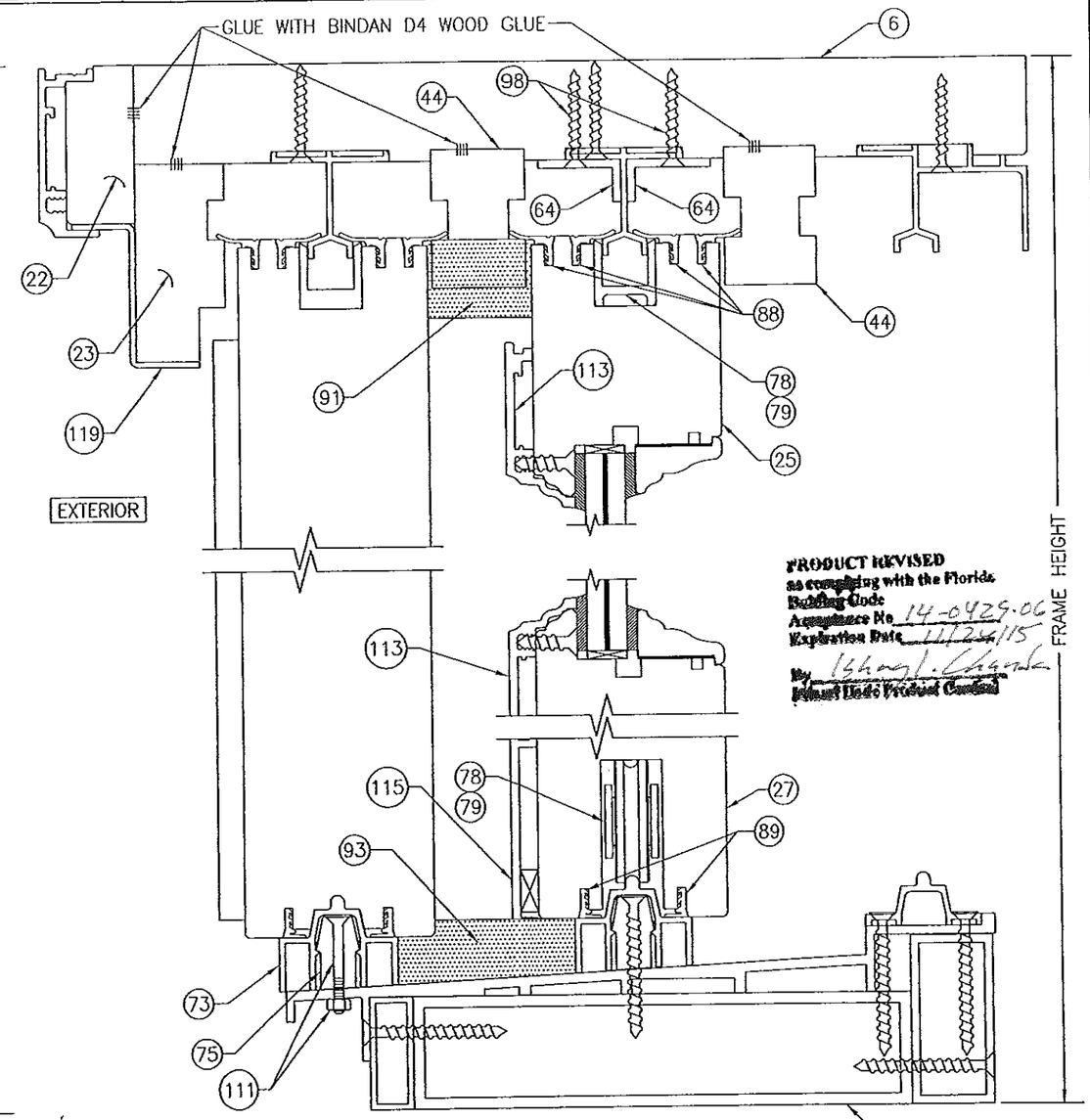


SECTION J5/20
SCALE: 1/2 FULL

FOR INSTALLATION & OTHER DETAIL NOT SHOWN, SEE SECTION J1/18

PRODUCT REVISED
as complying with the Florida Building Code
Acceptance No. 14-0429.06
Expiration Date 11/24/15
By
Miami-Dade Product Control

PRODUCT REVISED
as complying with the Florida Building Code
Acceptance No. 13-0217.10
Expiration Date 11/24/15
By
Miami-Dade Product Control

WARREN W. SCHAEFER LICENSE No. 44135 STATE OF FLORIDA PROFESSIONAL ENGINEER

| NO. | REVISION DESCRIPTION | BY | DATE |
|---|---|---|---|
| | | | |

DRAWN BY: W.R.W. | CHECKED BY: W.W.S.
PLOT: 1=24 | DATE: 04/04/09

DRAWING TITLE
LIFT & SLIDE BRONZE CLAD SLIDING GLASS IMPACT DOORS

MANUFACTURER
PEETZ WINDOWS & DOORS
15951 S.W. 41ST STREET, SUITE 150
WESTON, FL 33331
954-659-3887

CONSULTANTS
W. W. SCHAEFER ENGINEERING & CONSULTING, P.A. (CA 6809)
7480 150TH COURT NORTH
PALM BEACH GARDENS, FL 33418
PHONE: 561-744-3424

CERTIFICATION
NOV 06 2013
WARREN W. SCHAEFER, P.E.
P.E. NO. 44135

DRAWING NO. 1632 | REV. B
SHEET NO. 20 OF 38

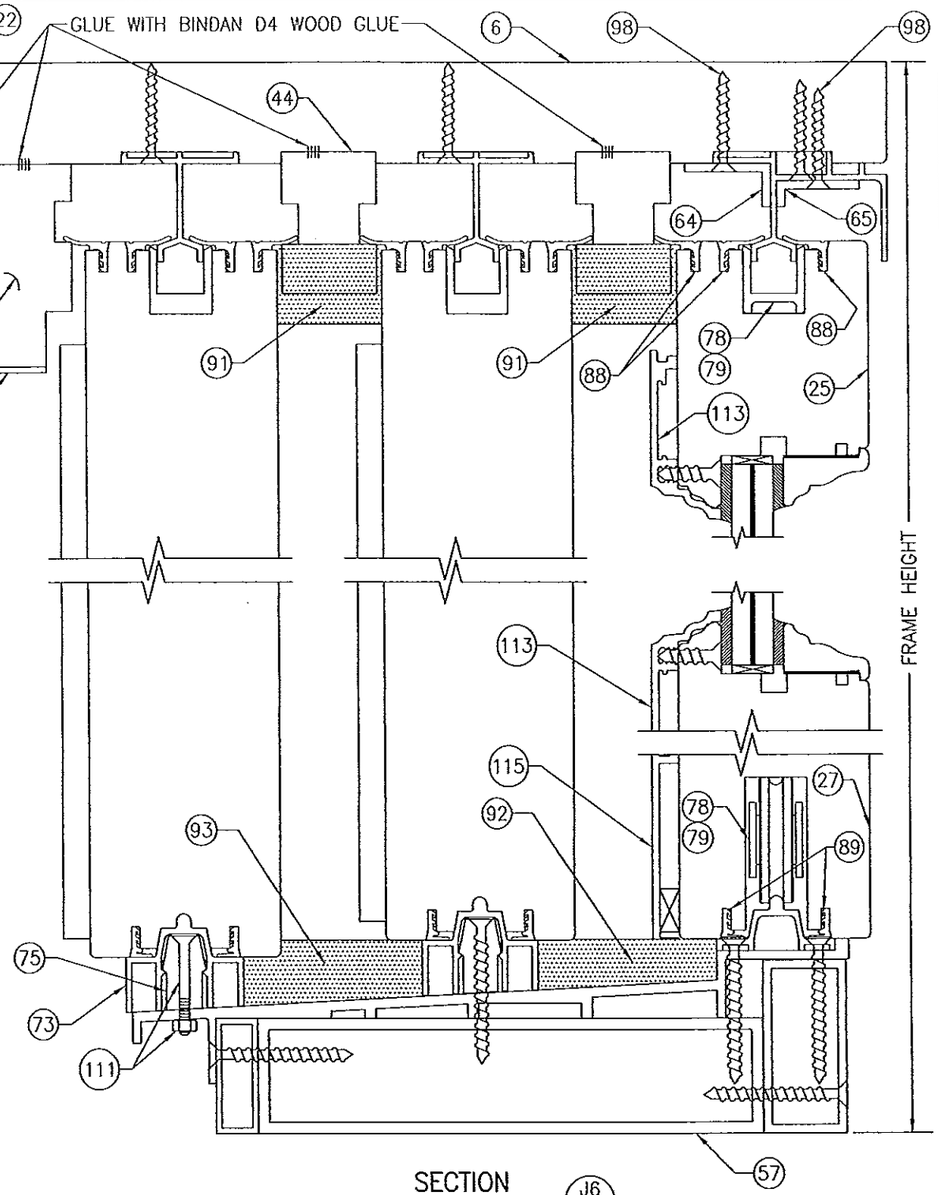


SECTION J6/21
SCALE: 1/2 FULL

FOR INSTALLATION & OTHER DETAIL NOT SHOWN, SEE SECTION J1/18

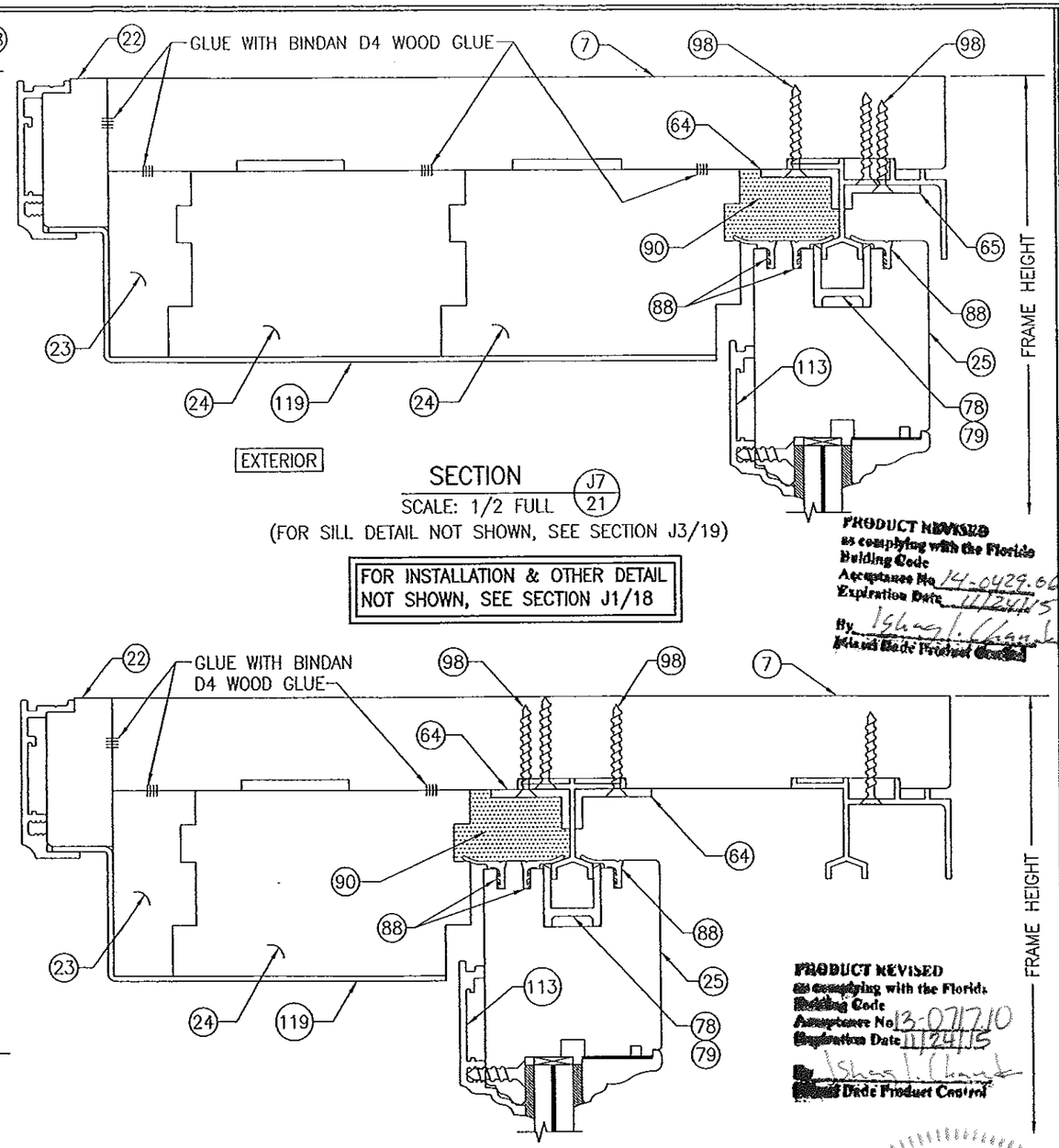


SECTION J7/21
SCALE: 1/2 FULL
(FOR SILL DETAIL NOT SHOWN, SEE SECTION J3/19)

FOR INSTALLATION & OTHER DETAIL NOT SHOWN, SEE SECTION J1/18

PRODUCT REVISED
as complying with the Florida Building Code
Acceptance No. 14-0429.06
Expiration Date 11/24/15
By Ishan I. Chand
Miami-Dade Product Control

SECTION J8/21
SCALE: 1/2 FULL
(FOR SILL DETAIL NOT SHOWN, SEE SECTION J2/19)

FOR INSTALLATION & OTHER DETAIL NOT SHOWN, SEE SECTION J1/18

PRODUCT REVISED
as complying with the Florida Building Code
Acceptance No. 13-0717.10
Expiration Date 11/24/15
By Ishan I. Chand
Miami-Dade Product Control

WARREN W. SCHAEFER LICENSE No. 44135 STATE OF FLORIDA PROFESSIONAL ENGINEER

| DRAWN BY: W.R.M. | CHECKED BY: W.W.S. |
|---|---|
| PLOT: 1=24 | DATE: 04/04/09 |

| NO. | REVISION DESCRIPTION | BY | DATE |
|---|---|---|---|
| | | | |

DRAWING TITLE
LIFT & SLIDE BRONZE CLAD SLIDING GLASS IMPACT DOORS

MANUFACTURER
PEETZ WINDOWS & DOORS
15951 S.W. 41ST STREET; SUITE 150
WESTON, FL 33331
954-659-3887

CONSULTANTS
W. W. SCHAEFER ENGINEERING & CONSULTING, P.A. (CA 6809)
7460 150TH COURT NORTH
PALM BEACH GARDENS, FL 33418
PHONE: 561-744-3424

CERTIFICATION
NOV 06 2013
WARREN W. SCHAEFER, P.E.
P.E. NO. 44135

DRAWING NO. 1632
REV. B
SHEET NO. 21 OF 38

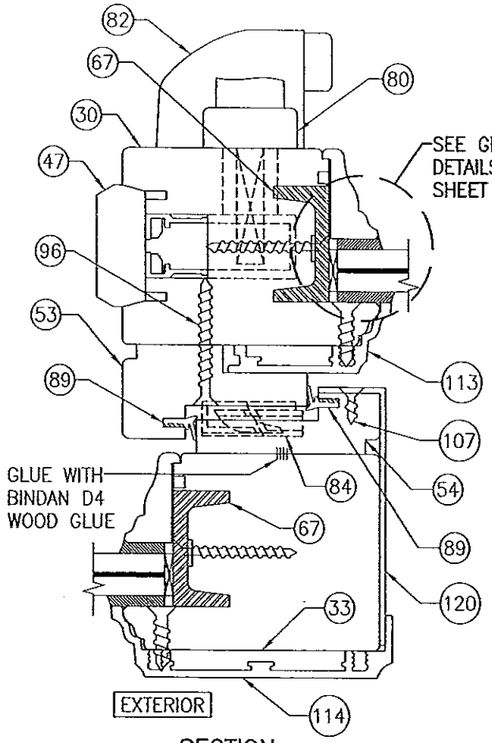


SECTION H2/23
SCALE: 1/2 FULL

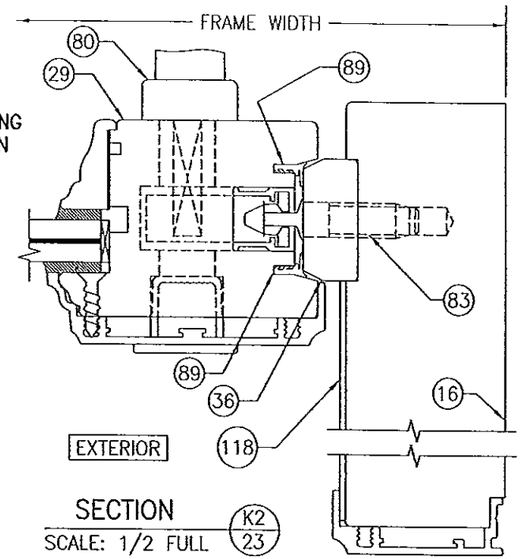


SECTION K2/23
SCALE: 1/2 FULL

FOR INSTALLATION & OTHER DETAIL NOT SHOWN, SEE SECTION K1/22

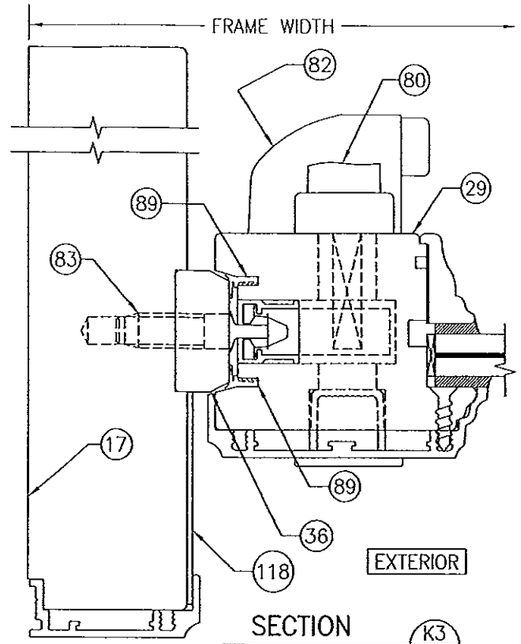


SECTION K3/23
SCALE: 1/2 FULL

FOR INSTALLATION & OTHER DETAIL NOT SHOWN, SEE SECTION K1/22

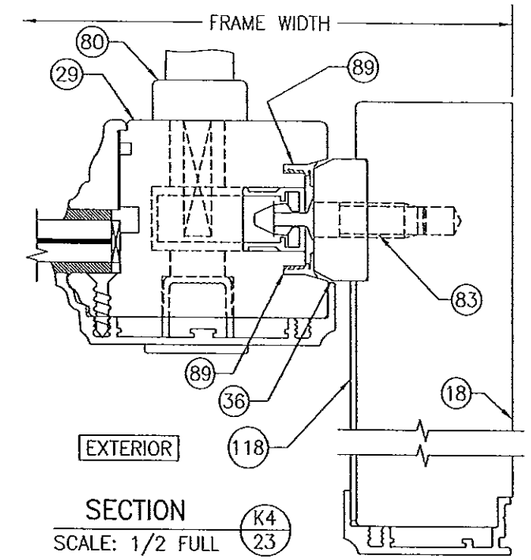


SECTION K4/23
SCALE: 1/2 FULL

FOR INSTALLATION & OTHER DETAIL NOT SHOWN, SEE SECTION K/22

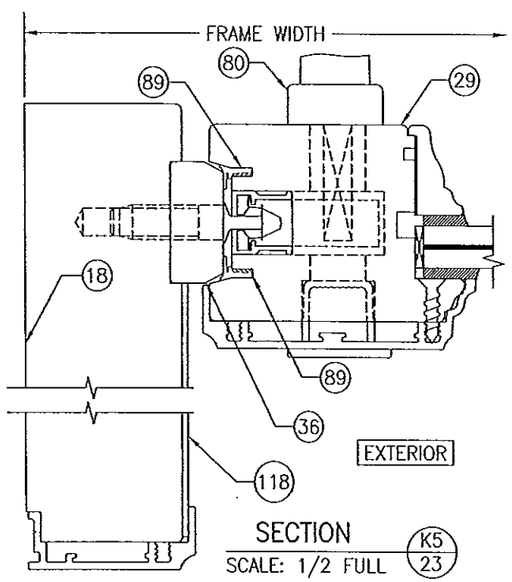


SECTION K5/23
SCALE: 1/2 FULL

FOR INSTALLATION & OTHER DETAIL NOT SHOWN, SEE SECTION K/22

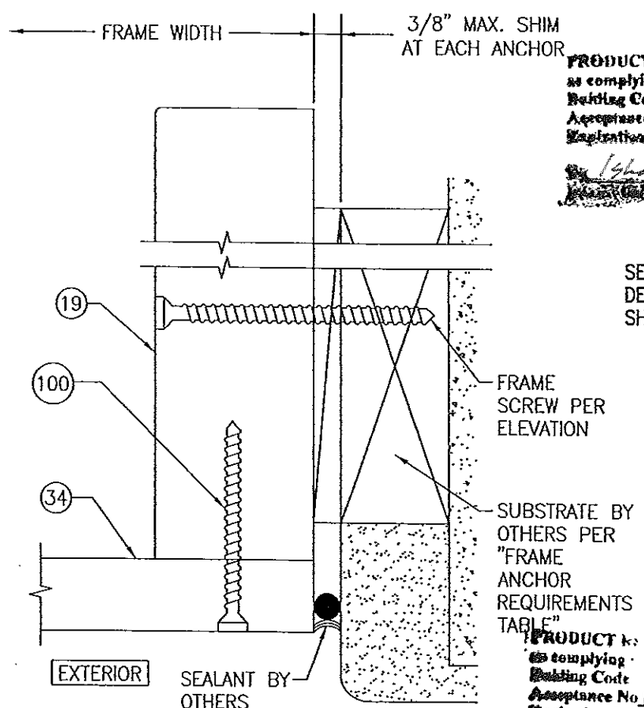


SECTION K6/23
SCALE: 1/2 FULL

PRODUCT REVISED
as complying with the Florida Building Code
Acceptance No. 14-0429.06
Expiration Date 11/24/15
By Ishwar Chand
Miami-Dade Product Control

PRODUCT REVISED
as complying with the Florida Building Code
Acceptance No. 13-0712.10
Expiration Date 11/24/15
By Ishwar Chand
Miami-Dade Product Control

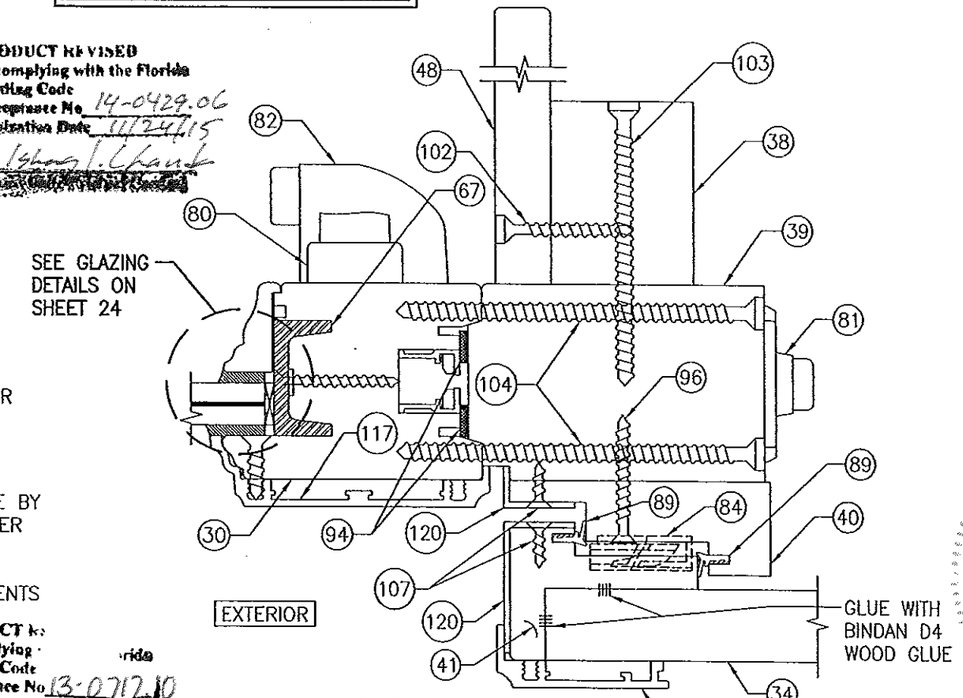


SECTION C2/23
SCALE: 1/2 FULL

NOV 06 2013

| DRAWN BY: W.R.M. | CHECKED BY: W.W.S. |
|---|---|
| PLOT: 1=24 | DATE: 04/04/09 |

| NO. | REVISION DESCRIPTION | BY | DATE |
|---|---|---|---|
| | | | |

DRAWING TITLE
LIFT & SLIDE BRONZE CLAD SLIDING GLASS IMPACT DOORS

MANUFACTURER
PEETZ WINDOWS & DOORS
15951 S.W. 41ST STREET; SUITE 150
WESTON, FL 33331
954-659-3887

CONSULTANTS
W. W. SCHAEFER ENGINEERING & CONSULTING, P.A. (CA 6809)
7480 150TH COURT NORTH
PALM BEACH GARDENS, FL 33418
PHONE: 561-744-3424

CERTIFICATION
WARREN W. SCHAEFER, P.E.
P.E. NO. 44135

DRAWING NO. 1632
REV. B
SHEET NO. 23 OF 38

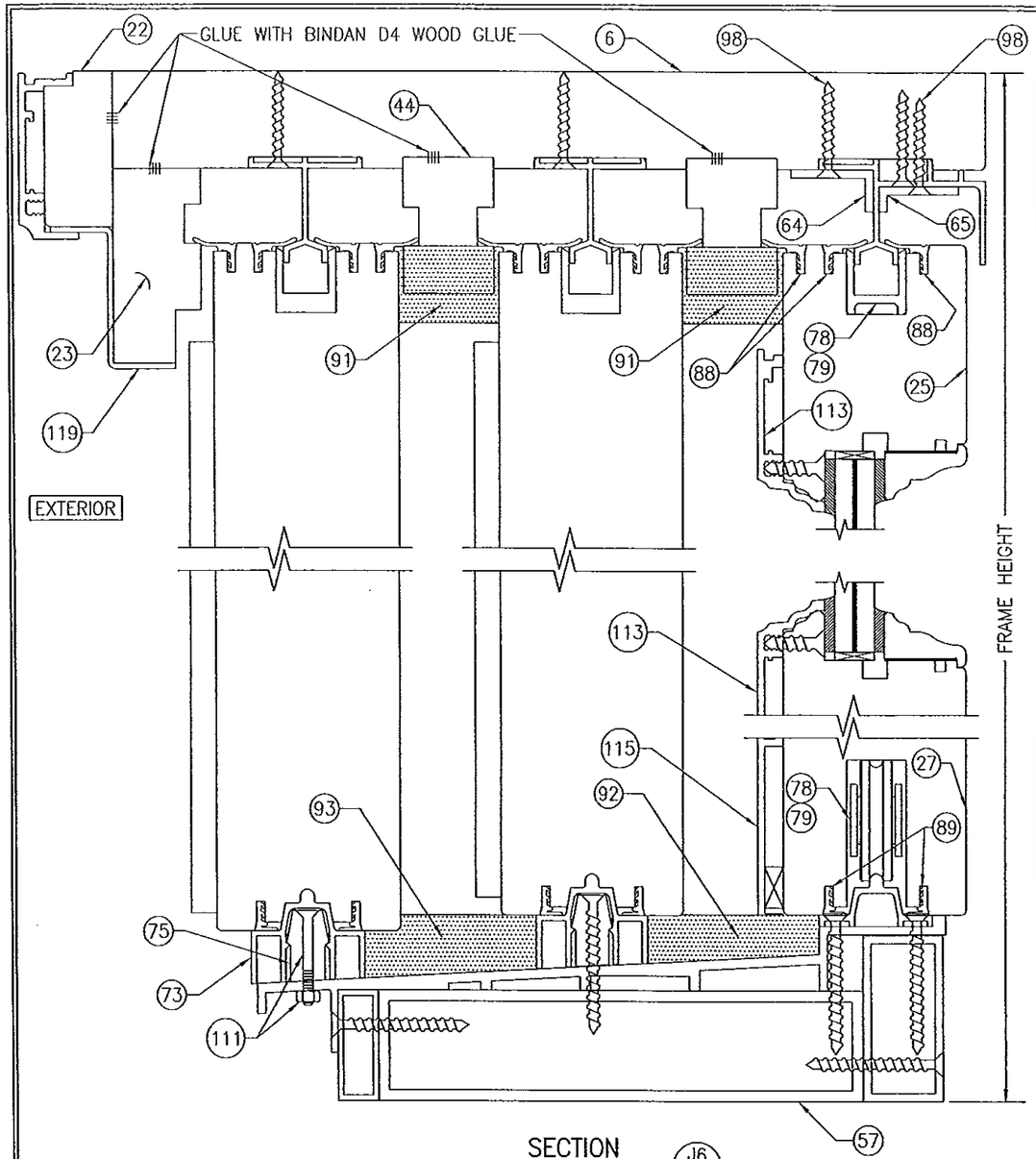


SECTION J6/21
SCALE: 1/2 FULL

FOR INSTALLATION & OTHER DETAIL NOT SHOWN, SEE SECTION J1/18

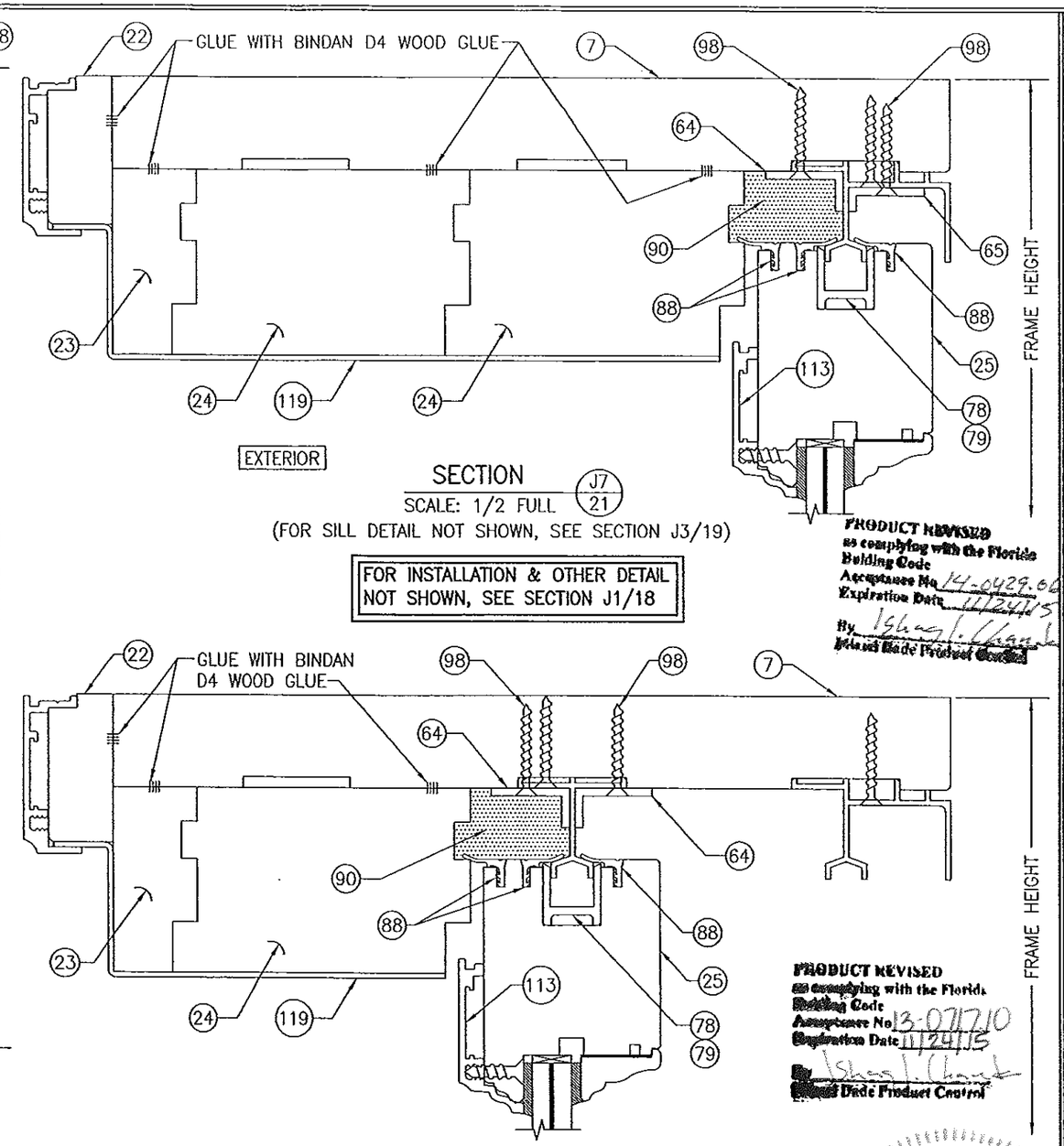


SECTION J7/21
SCALE: 1/2 FULL
(FOR SILL DETAIL NOT SHOWN, SEE SECTION J3/19)

FOR INSTALLATION & OTHER DETAIL NOT SHOWN, SEE SECTION J1/18

PRODUCT REVISED
as complying with the Florida Building Code
Acceptance No. 14-0429.06
Expiration Date 11/24/15
By Ishay L. Klaul
Miami-Dade Product Control

SECTION J8/21
SCALE: 1/2 FULL
(FOR SILL DETAIL NOT SHOWN, SEE SECTION J2/19)

FOR INSTALLATION & OTHER DETAIL NOT SHOWN, SEE SECTION J1/18

PRODUCT REVISED
as complying with the Florida Building Code
Acceptance No. 13-0717.10
Expiration Date 11/24/15
By Ishay L. Klaul
Miami-Dade Product Control

WARREN W. SCHAEFER ★ ENGINEER ★ LICENSE No. 44135 ★ STATE OF FLORIDA ★ PROFESSIONAL ENGINEER

| DRAWN BY: W.R.W. | CHECKED BY: W.W.S |
|---|---|
| PLOT: 1=24 | DATE: 04/04/03 |

| NO. | REVISION DESCRIPTION | BY | DATE |
|---|---|---|---|
| | | | |

DRAWING TITLE
LIFT & SLIDE BRONZE CLAD SLIDING GLASS IMPACT DOORS

MANUFACTURER
PEETZ WINDOWS & DOORS
15951 S.W. 41ST STREET; SUITE 150
WESTON, FL 33331
954-659-3887

CONSULTANTS
W. W. SCHAEFER ENGINEERING & CONSULTING, P.A. (CA 6809)
7480 150TH COURT NORTH
PALM BEACH GARDENS, FL 33418
PHONE: 561-744-3424

CERTIFICATION
NOV 06 2013
WARREN W. SCHAEFER, P.E.
P.E. NO. 44135

DRAWING NO. 1632
REV. B
SHEET NO. 21 OF 38

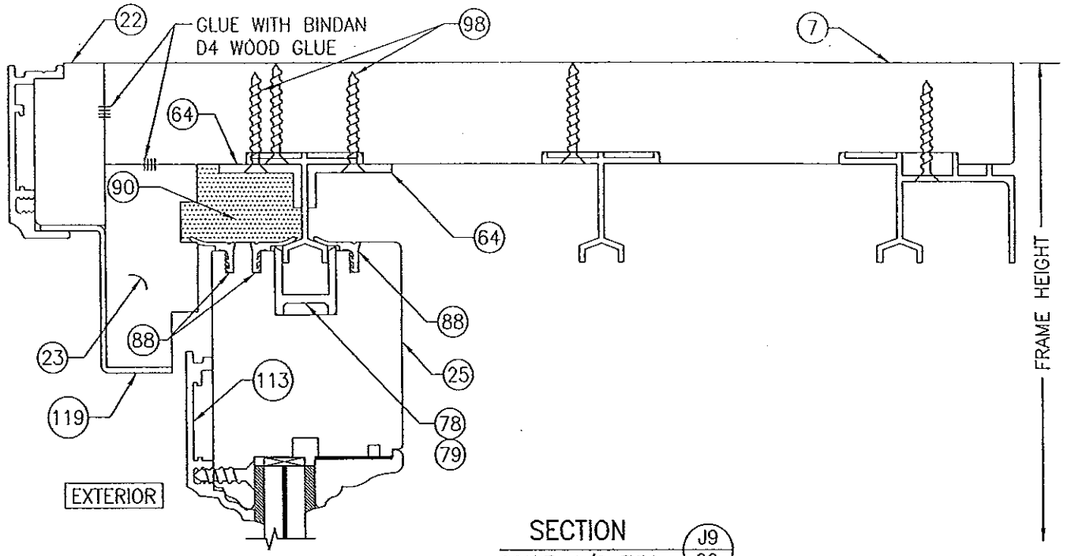


SECTION J9/22
SCALE: 1/2 FULL

(FOR SILL DETAIL NOT SHOWN, SEE SECTION J4/20)

FOR INSTALLATION & OTHER DETAIL NOT SHOWN, SEE SECTION J1/18

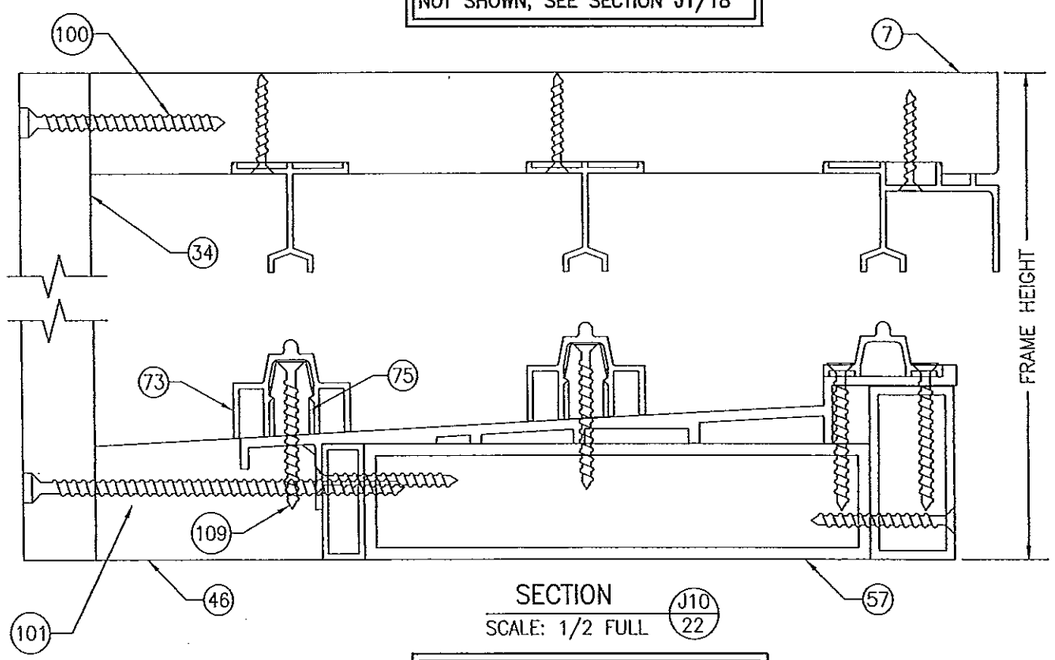


SECTION J10/22
SCALE: 1/2 FULL

FOR INSTALLATION & OTHER DETAIL NOT SHOWN, SEE SECTION J1/18

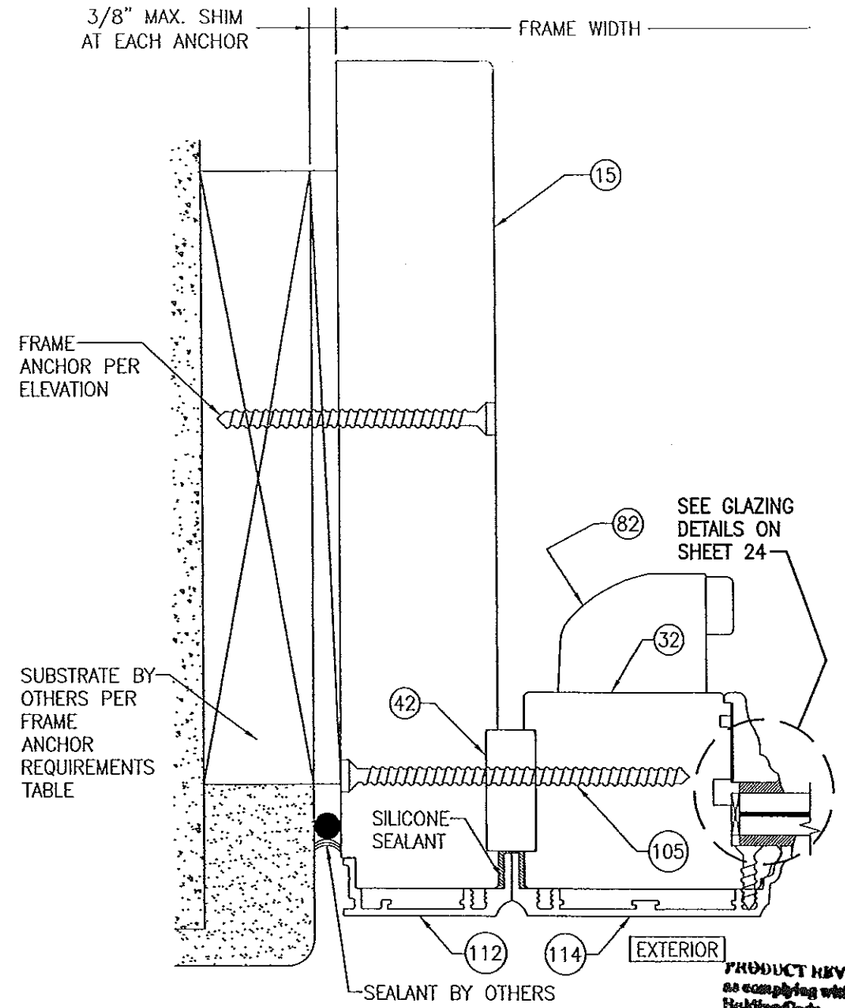


SECTION K1/22
SCALE: 1/2 FULL

FRAME SCREW INSTALLATION SHOWN, SEE DETAILS ON SHEET 27 FOR DIRECT MOUNT & CLIP MOUNT DETAILS.

PRODUCT REVISED
as complying with the Florida Building Code
Acceptance No. 14-0429.06
Expiration Date 11/24/15
By
Miami Dade Product Control

PRODUCT REVISED
as complying with the Florida Building Code
Acceptance No. 13-0717.10
Expiration Date 11/24/15
By
Miami Dade Product Control

WARREN W. SCHAEFER LICENSE NO. 44135 STATE OF FLORIDA PROFESSIONAL ENGINEER

| DRAWN BY: W.R.M. | CHECKED BY: W.W.S. |
|---|---|
| PLOT: 1=24 | DATE: 04/04/09 |

| NO. | REVISION DESCRIPTION | BY | DATE |
|---|---|---|---|
| | | | |

DRAWING TITLE
LIFT & SLIDE BRONZE CLAD SLIDING GLASS IMPACT DOORS

MANUFACTURER
PEETZ WINDOWS & DOORS
15951 S.W. 41ST STREET; SUITE 150
WESTON, FL 33331
954-659-3887

CONSULTANTS
W. W. SCHAEFER ENGINEERING & CONSULTING, P.A. (CA 6809)
7480 150TH COURT NORTH
PALM BEACH GARDENS, FL 33418
PHONE: 561-744-3424

CERTIFICATION
NOV 06 2013
WARREN W. SCHAEFER, P.E.
P.E. NO. 44135

DRAWING NO. 1632
REV. B
SHEET NO. 22 OF 38

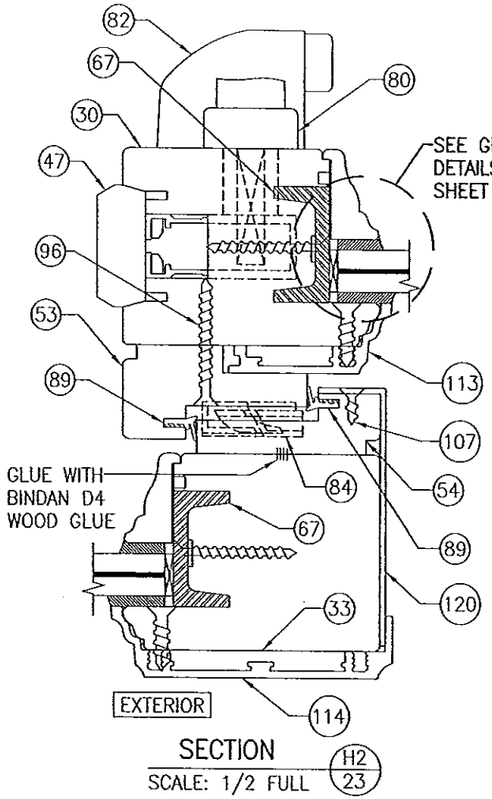


SECTION H2/23
SCALE: 1/2 FULL

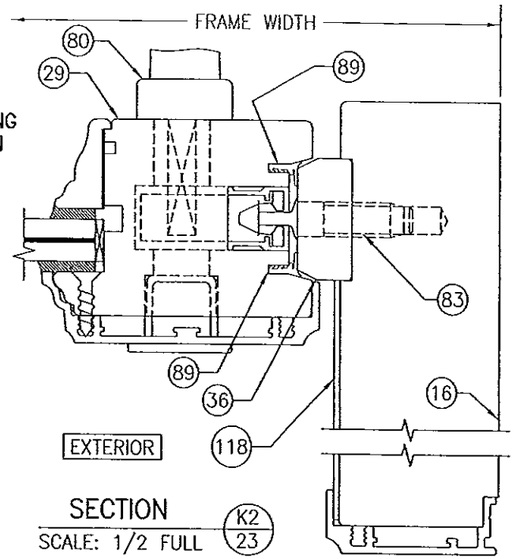


SECTION K2/23
SCALE: 1/2 FULL

FOR INSTALLATION & OTHER DETAIL NOT SHOWN, SEE SECTION K1/22

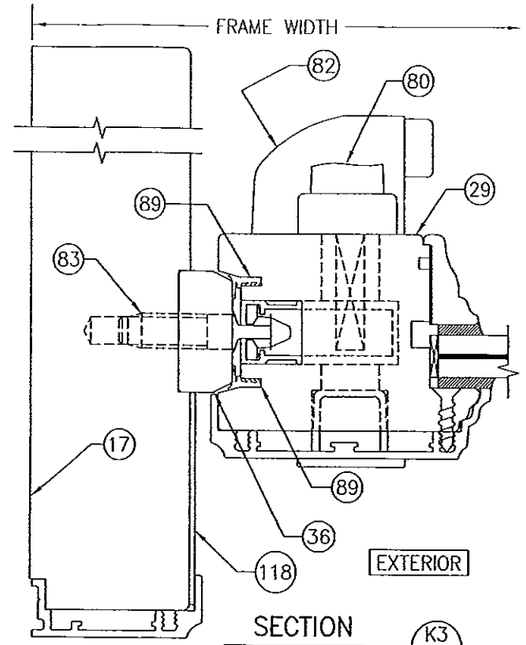


SECTION K3/23
SCALE: 1/2 FULL

FOR INSTALLATION & OTHER DETAIL NOT SHOWN, SEE SECTION K1/22

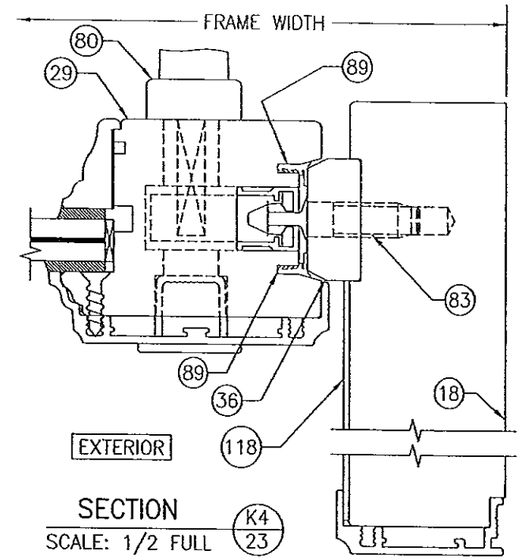


SECTION K4/23
SCALE: 1/2 FULL

FOR INSTALLATION & OTHER DETAIL NOT SHOWN, SEE SECTION K/22

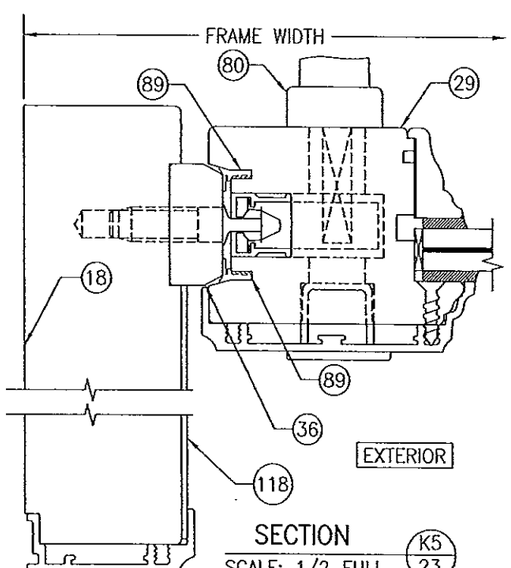


SECTION K5/23
SCALE: 1/2 FULL

FOR INSTALLATION & OTHER DETAIL NOT SHOWN, SEE SECTION K/22

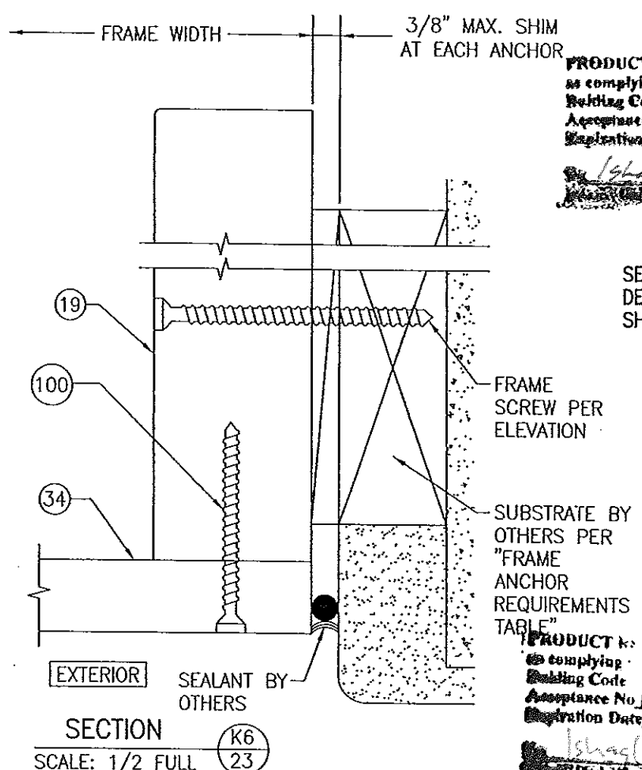


SECTION K6/23
SCALE: 1/2 FULL

PRODUCT REVISED
as complying with the Florida Building Code
Acceptance No. 14-0429.06
Expiration Date 11/24/15

PRODUCT REVISED
as complying with the Florida Building Code
Acceptance No. 13-0717.10
Expiration Date 11/24/12

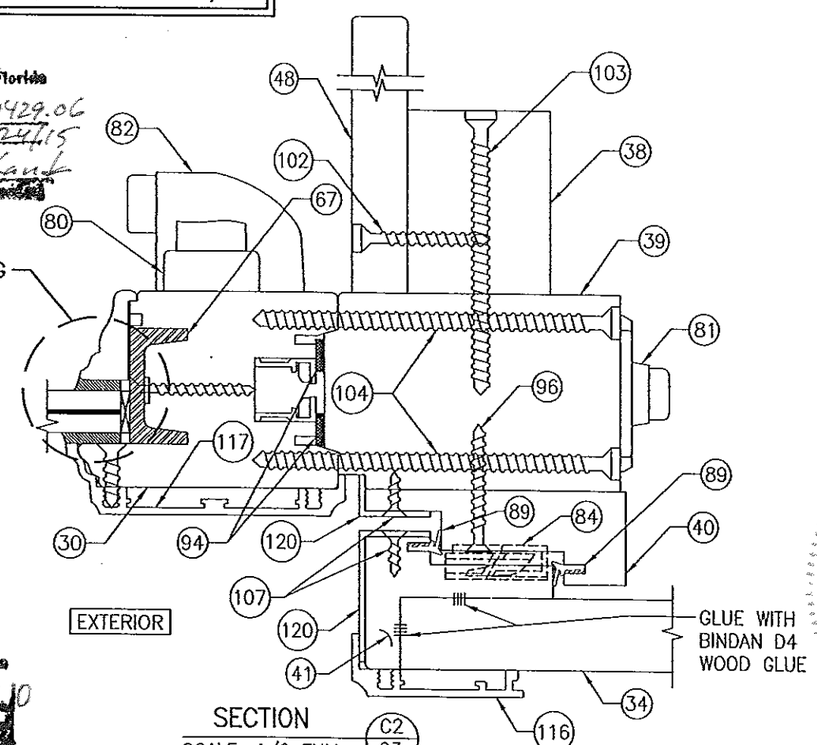


SECTION C2/23
SCALE: 1/2 FULL

NOV 06 2013

| DRAWN BY: W.R.M. | CHECKED BY: W.W.S. |
|---|---|
| PLOT: 1=24 | DATE: 06/04/09 |

| NO. | REVISION DESCRIPTION | BY | DATE |
|---|---|---|---|
| | | | |

DRAWING TITLE
LIFT & SLIDE BRONZE CLAD SLIDING GLASS IMPACT DOORS

MANUFACTURER
PEETZ WINDOWS & DOORS
15951 S.W. 41ST STREET; SUITE 150
WESTON, FL 33331
954-659-3887

CONSULTANTS
W. W. SCHAEFER ENGINEERING & CONSULTING, P.A. (CA 6809)
7480 150TH COURT NORTH
PALM BEACH GARDENS, FL 33418
PHONE: 561-744-3424

CERTIFICATION
WARREN W. SCHAEFER, P.E.
P.E. NO. 44135

DRAWING NO. 1632 REV. B

SHEET NO. 23 OF 38

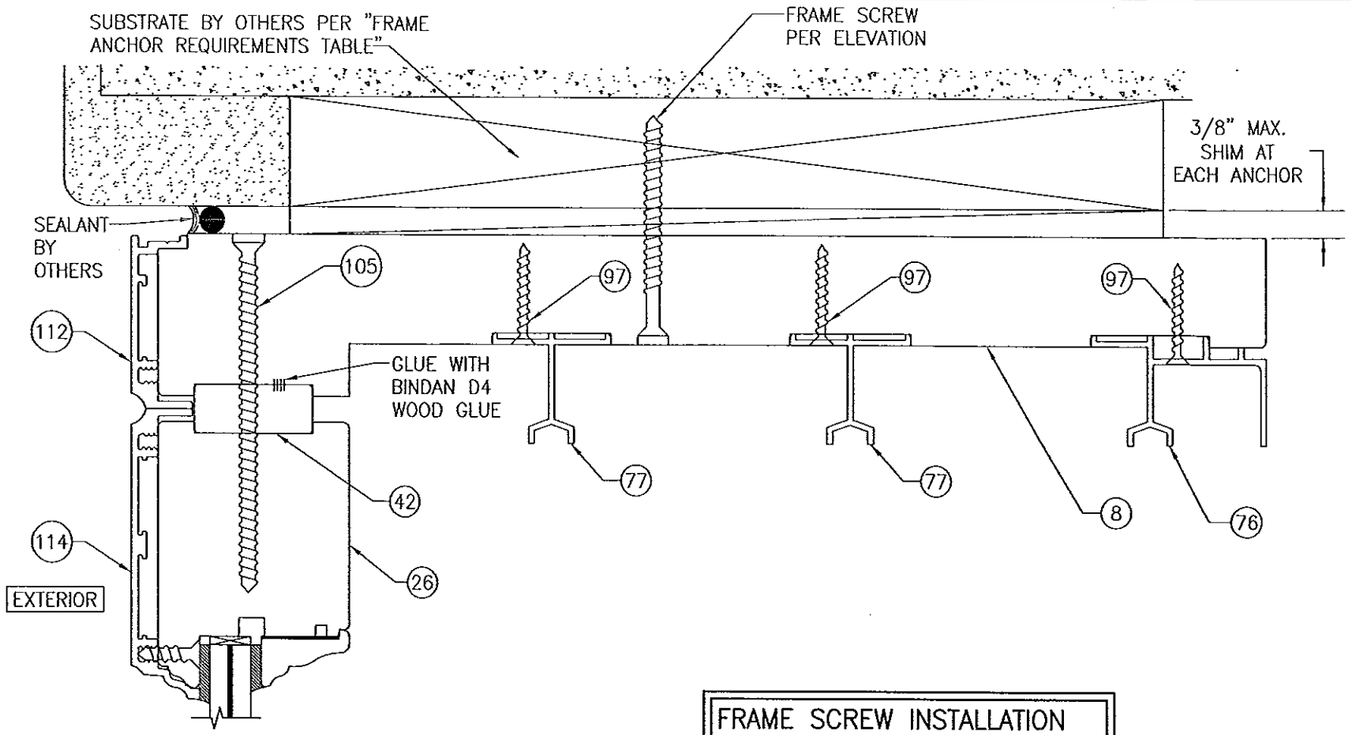


FRAME SCREW INSTALLATION SHOWN, SEE DETAILS ON SHEET 27 FOR DIRECT MOUNT & CLIP MOUNT DETAILS.

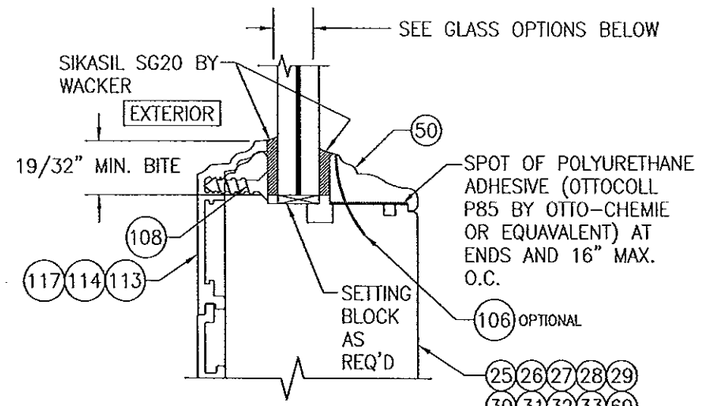


## NON-I.G. GLAZING DETAIL
## GLASS OPTIONS 1, 2 & 3

GLASS OPTION 1: 1/2" LAMINATED GLASS (3/16" H.S./0.075" EASTMAN CHEMICAL CO. SAFLEX CP/1/4" H.S.)
GLASS OPTION 2: 9/16" LAMINATED GLASS (3/16" H.S./0.12" EASTMAN CHEMICAL CO. SAFLEX/1/4" H.S.)
GLASS OPTION 3: 9/16" LAMINATED GLASS (1/4" H.S./0.075" EASTMAN CHEMICAL CO. SAFLEX CP/1/4" H.S.)

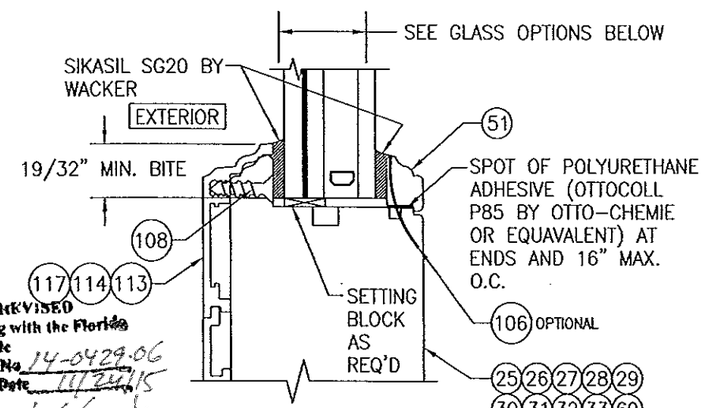


## I.G. GLAZING DETAIL
## GLASS OPTIONS 4 & 5

GLASS OPTION 4: 1 1/4" LAMINATED I.G. (3/16" H.S./0.12" EASTMAN CHEMICAL CO. SAFLEX/1/4" H.S./1/2" AIR SPACE/3/16 TEMP.)

GLASS OPTION 5: 1 5/16" LAMINATED I.G. (1/4" H.S./0.075" EASTMAN CHEMICAL CO. SAFLEX CP/1/4" H.S./1/2" AIR SPACE/1/4 TEMP.)

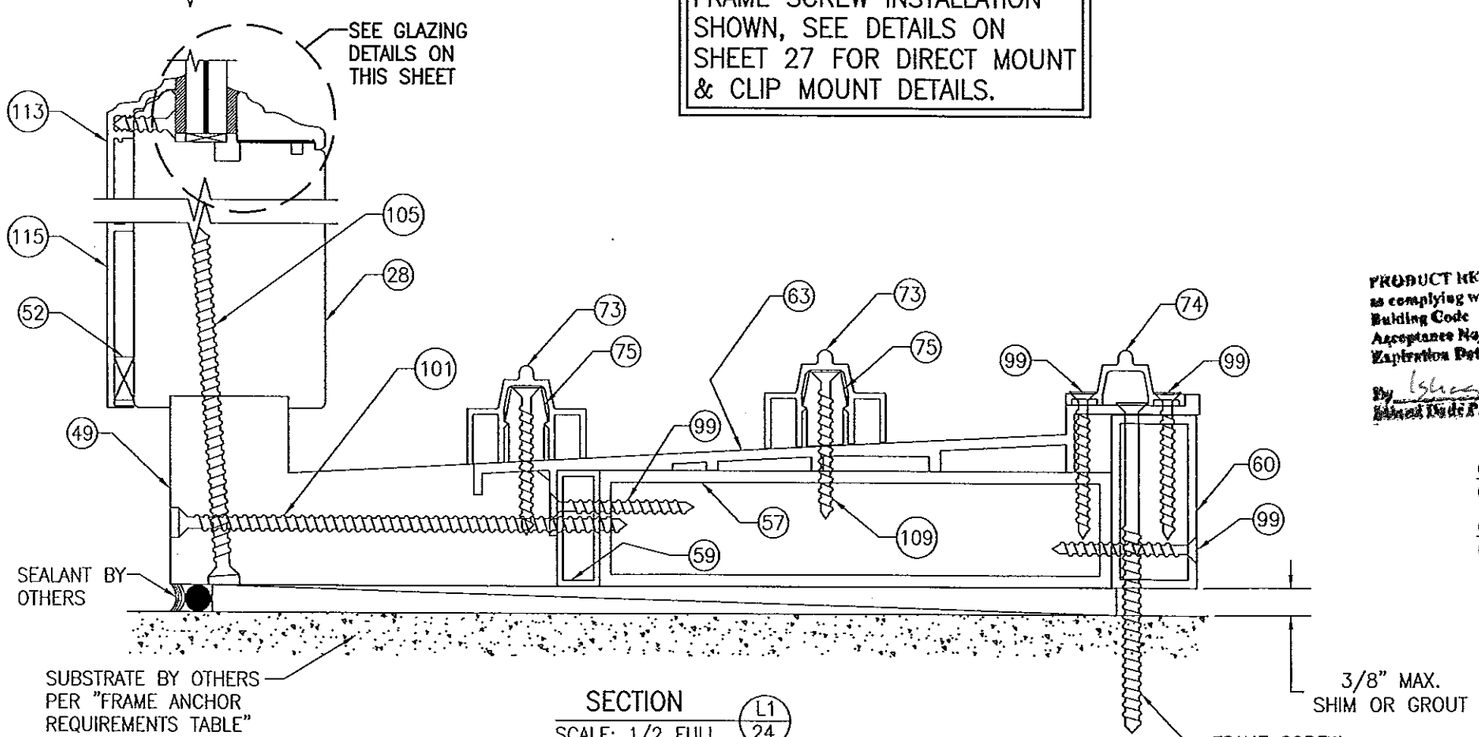


## SECTION L1/24
SCALE: 1/2 FULL

(STANDARD SILL CONDITION SHOWN. FOR ALTERNATE FLUSH MOUNT SILL CONDITION, SEE "ALTERNATE FLUSH MOUNT SILL DETAILS" ON SHEETS 28-31)

PRODUCT REVISED as complying with the Florida Building Code Acceptance No. 14-0429.06 Expiration Date 11/24/15 By Ishan I. Chank Editorial Dade Product Control

PRODUCT REVISED as complying with the Florida Building Code Acceptance No. 13-0717.10 Expiration Date 11/24/15 By Ishan I. Chank Editorial Dade Product Control

WARREN W. SCHAEFER LICENSE No 44135 STATE OF FLORIDA PROFESSIONAL ENGINEER

| DRAWN BY: W.R.M. | CHECKED BY: W.W.S. |
|---|---|
| PLOT: 1=24 | DATE: 04/04/09 |

| NO. | REVISION DESCRIPTION | BY | DATE |
|---|---|---|---|
| | | | |

DRAWING TITLE: LIFT & SLIDE BRONZE CLAD SLIDING GLASS IMPACT DOORS

MANUFACTURER: PEETZ WINDOWS & DOORS, 15951 S.W. 41ST STREET; SUITE 150, WESTON, FL 33331, 954-659-3887

CONSULTANTS: W. W. SCHAEFER ENGINEERING & CONSULTING, P.A. (CA 6809), 7480 150TH COURT NORTH, PALM BEACH GARDENS, FL 33418, PHONE: 561-744-3424

CERTIFICATION: NOV 06 2013, WARREN W. SCHAEFER, P.E. P.E. NO. 44135

DRAWING NO. 1632 REV. B

SHEET NO. 24 OF 38

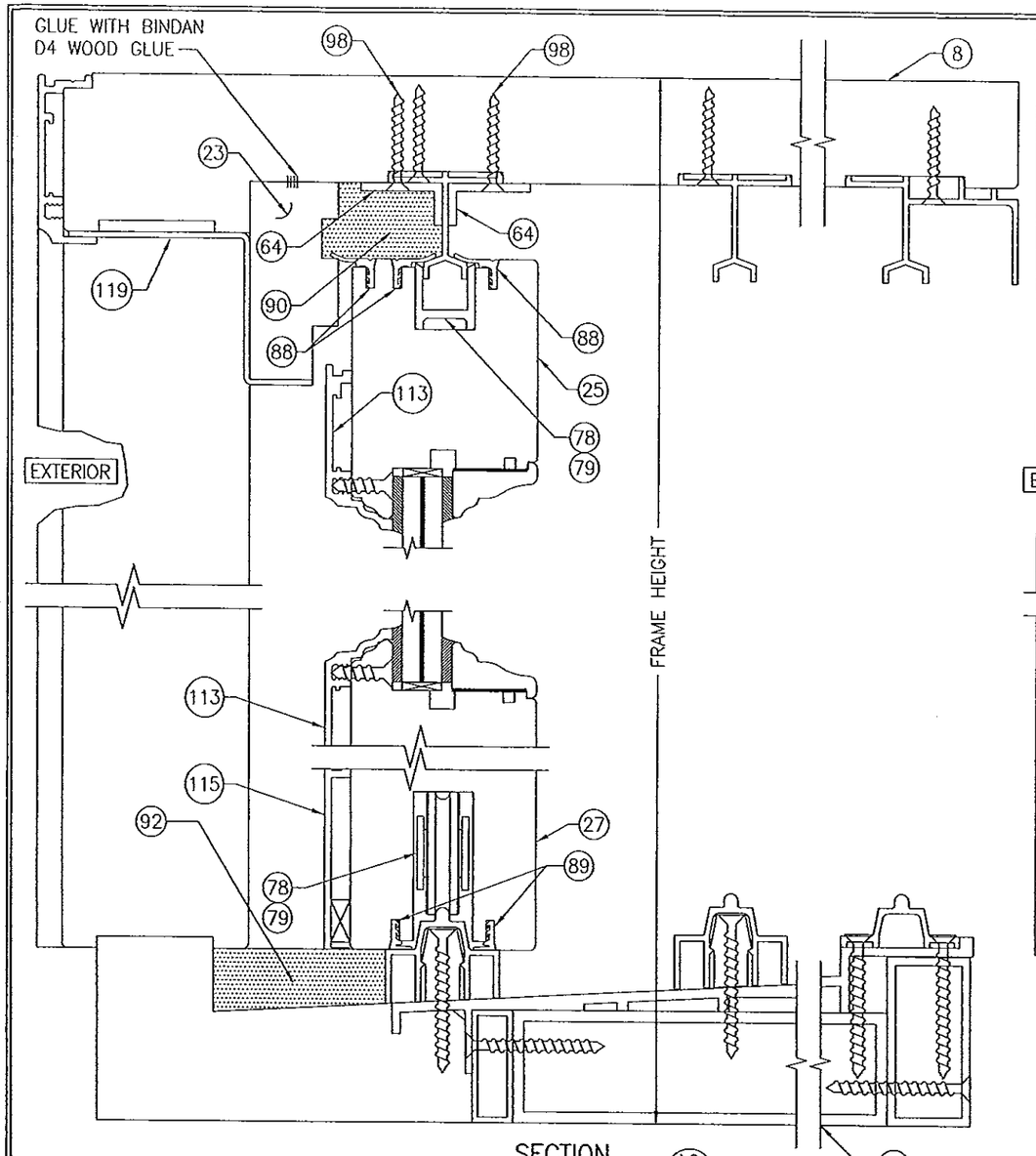


SECTION L2/25
SCALE: 1/2 FULL

FOR INSTALLATION & OTHER DETAIL NOT SHOWN, SEE SECTION L1/24

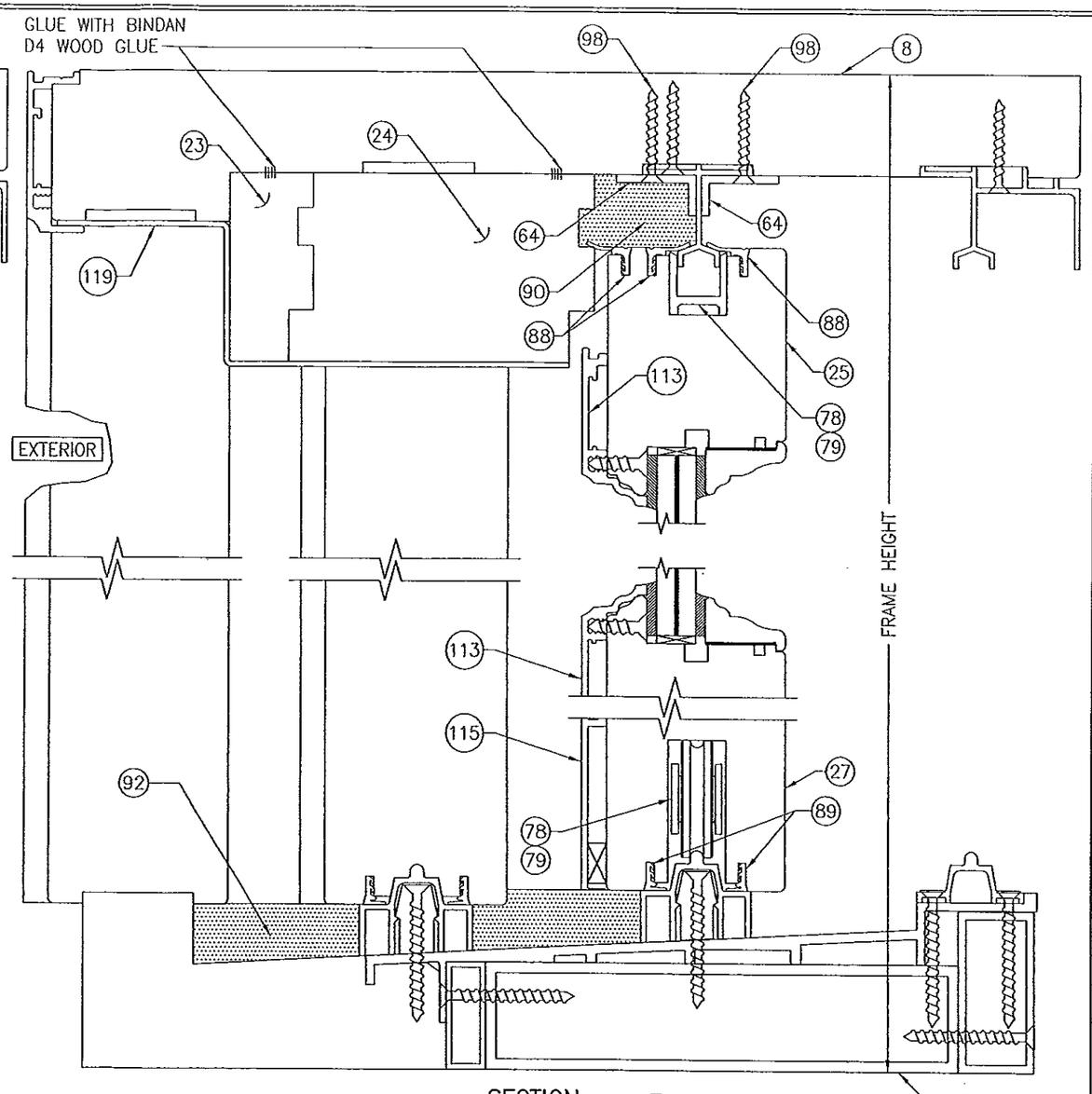


SECTION L3/25
SCALE: 1/2 FULL

FOR INSTALLATION & OTHER DETAIL NOT SHOWN, SEE SECTION L1/24

PRODUCT REVISED
in complying with the Florida
Building Code
Acceptance No.
Expiration Date
By
Miami Dade Product Control

PRODUCT REVISED
in complying with the Florida
Building Code
Acceptance No. 13-0717.10
Expiration Date 11/24/15
By
Miami Dade Product Control

WARREN W. SCHAEFER
LICENSE No. 44135
STATE OF FLORIDA
PROFESSIONAL ENGINEER

| NO. | REVISION DESCRIPTION | BY | DATE |
|---|---|---|---|
| | | | |

DRAWN BY: W.R.W.
CHECKED BY: W.W.S.
PLOT: 1=24
DATE: 04/04/09

DRAWING TITLE
LIFT & SLIDE BRONZE CLAD SLIDING GLASS IMPACT DOORS

MANUFACTURER
PEETZ WINDOWS & DOORS
15951 S.W. 41ST STREET; SUITE 150
WESTON, FL 33331
954-659-3887

CONSULTANTS
W. W. SCHAEFER ENGINEERING & CONSULTING, P.A. (CA 6809)
7480 150TH COURT NORTH
PALM BEACH GARDENS, FL 33418
PHONE: 561-744-3424

CERTIFICATION
NOV 06 2013
WARREN W. SCHAEFER, P.E.
P.E. NO. 44135

DRAWING NO. 1632
REV. B
SHEET NO. 25 OF 38

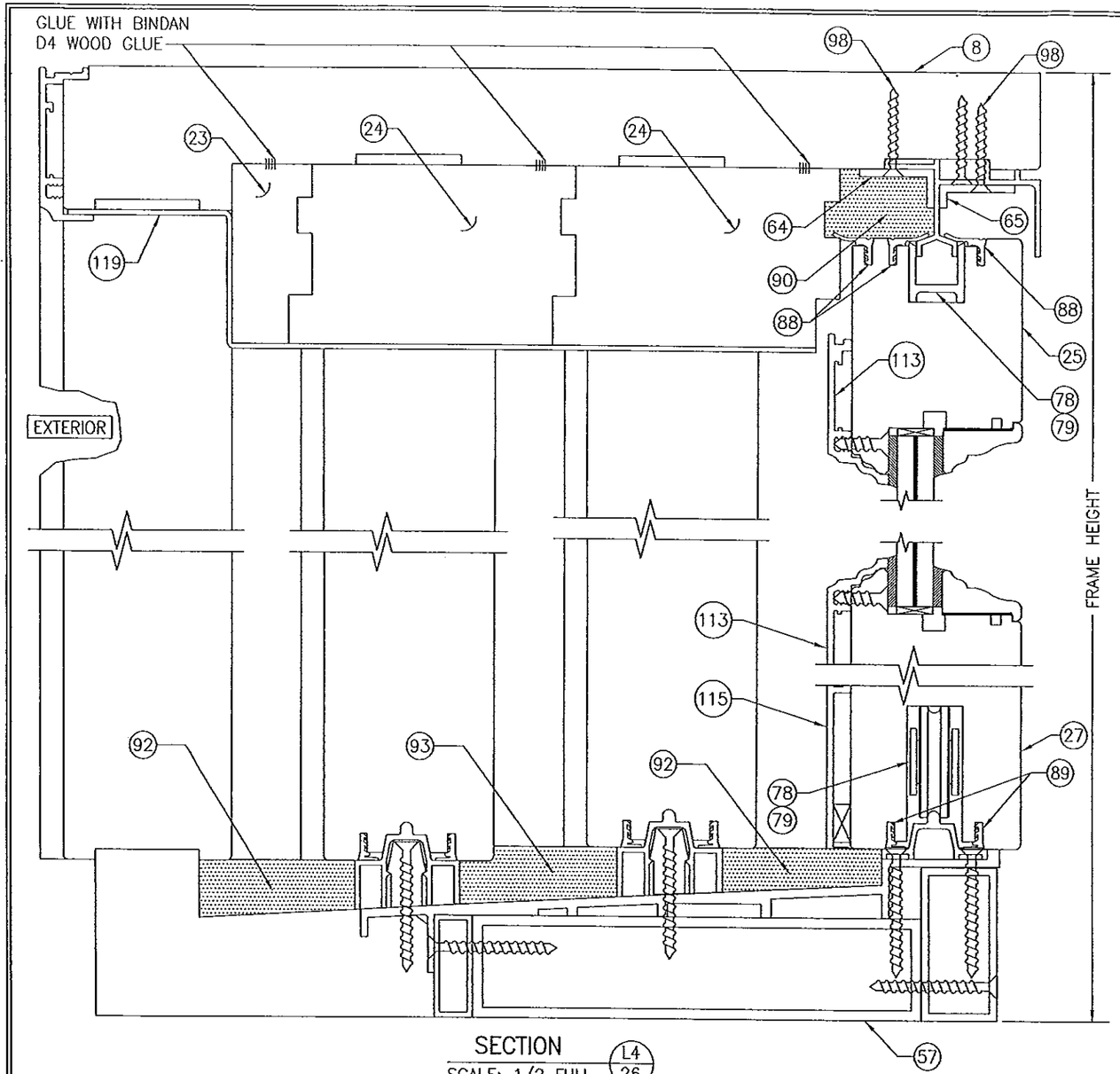


SECTION (L4/26)
SCALE: 1/2 FULL

FOR INSTALLATION & OTHER DETAIL NOT SHOWN, SEE SECTION L1/24

FRAME SCREW INSTALLATION SHOWN, SEE DETAILS ON SHEET 27 FOR DIRECT MOUNT & CLIP MOUNT DETAILS.

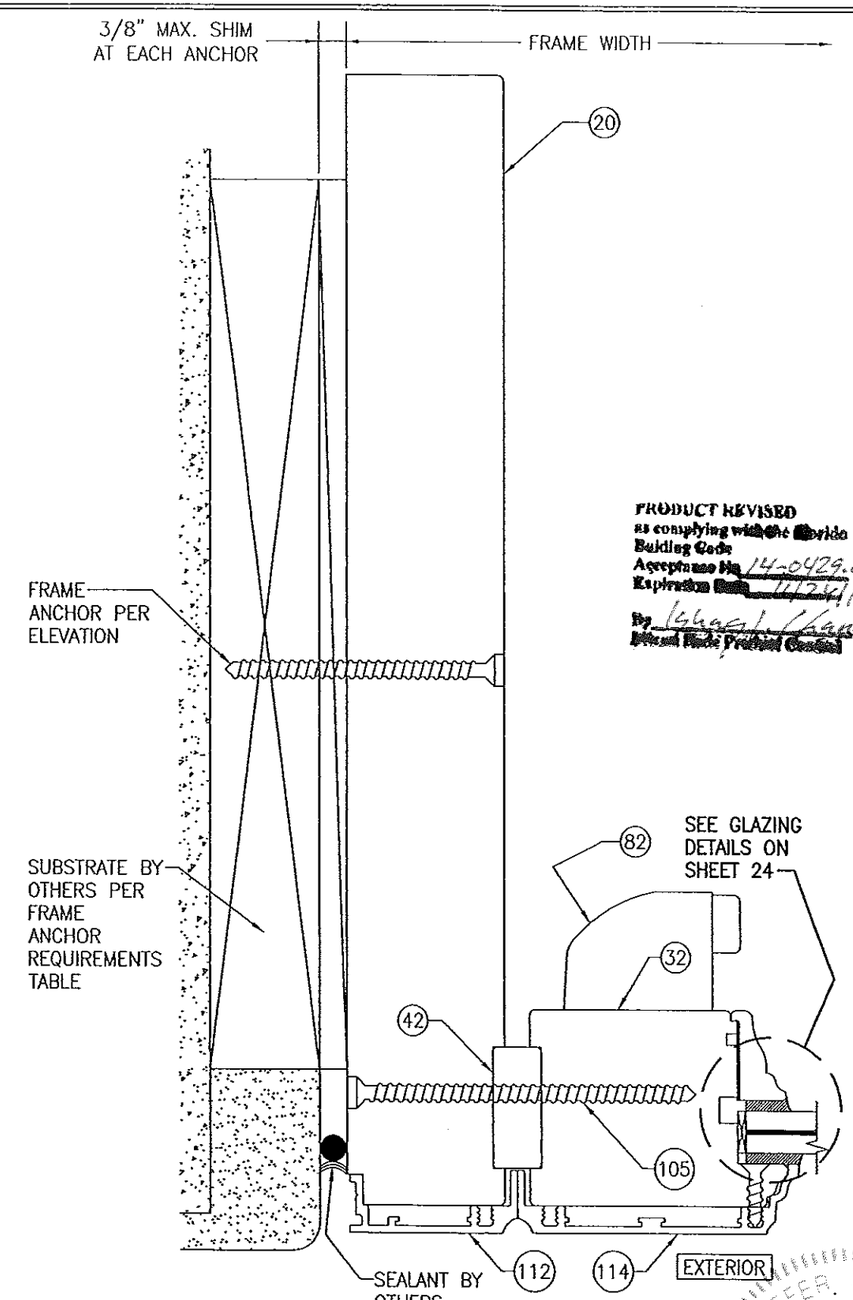


SECTION (M1/26)
SCALE: 1/2 FULL

PRODUCT REVISED
as complying with the Florida
Building Code
Acceptance No. 13-0717.10
Expiration Date 11/29/15
By
Miami Dade Product Control

PRODUCT REVISED
as complying with the Florida
Building Code
Acceptance No. 14-0429.06
Expiration Date 11/24/15
By
Miami Dade Product Control

WARREN W. SCHAEFER LICENSE NO 44135 STATE OF FLORIDA PROFESSIONAL ENGINEER

| DRAWN BY: W.R.M. | CHECKED BY: W.W.S. |
|---|---|
| PLOT: 1=24 | DATE: 04/04/09 |

| NO. | REVISION DESCRIPTION | BY | DATE |
|---|---|---|---|
| | | | |

DRAWING TITLE
LIFT & SLIDE BRONZE CLAD SLIDING GLASS IMPACT DOORS

MANUFACTURER
PEETZ WINDOWS & DOORS
15951 S.W. 41ST STREET; SUITE 150
WESTON, FL 33331
954-659-3887

CONSULTANTS
W. W. SCHAEFER ENGINEERING & CONSULTING, P.A. (CA 6809)
7480 150TH COURT NORTH
PALM BEACH GARDENS, FL 33418
PHONE: 561-744-3424

CERTIFICATION
NOV 06 2013
WARREN W. SCHAEFER, P.E.
P.E. NO. 44135

DRAWING NO. 1632
REV. B
SHEET NO. 26 OF 38

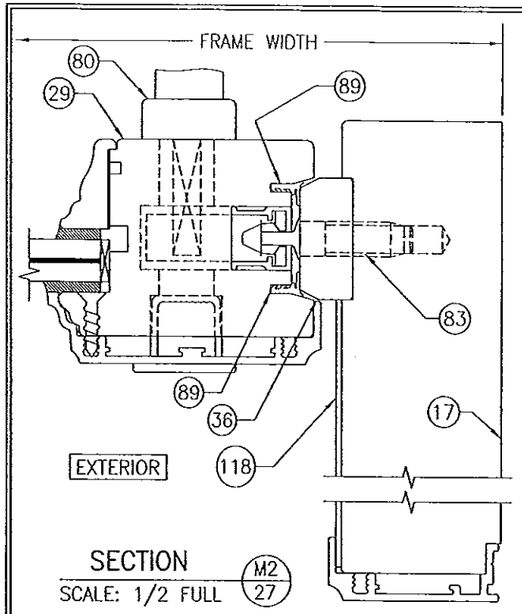


SECTION M2/27
SCALE: 1/2 FULL

FOR INSTALLATION & OTHER DETAIL NOT SHOWN, SEE SECTION M1/26

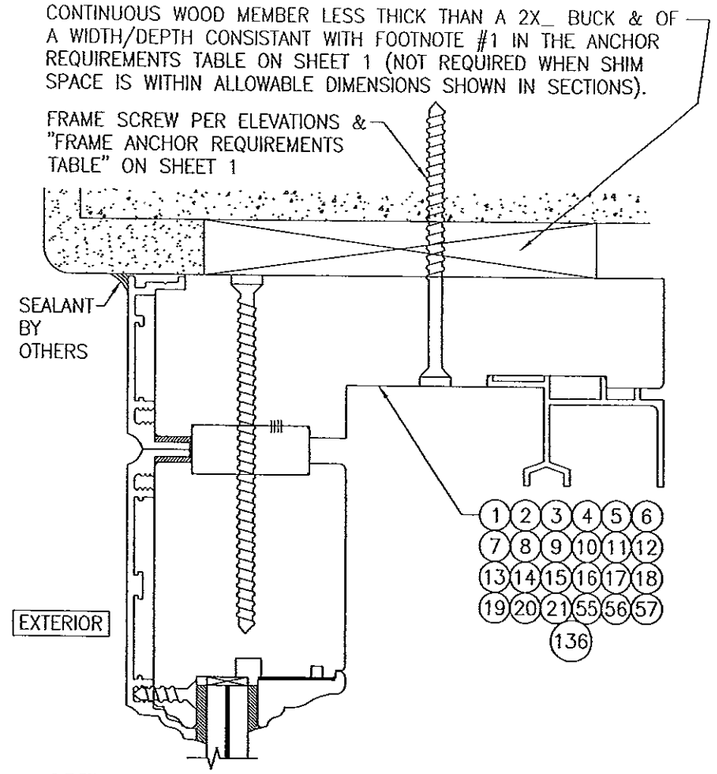


OPTIONAL DIRECT MOUNT DETAIL TO SUBSTRATE WITH SPACER

(2 PANEL DEEP HEAD SECTION SHOWN, ALL OTHER APPROVED HEAD, SILL & SIDE CONDITIONS ARE INSTALLED THE SAME)
(FOR DETAIL NOT SHOWN, SEE OTHER SECTIONS)

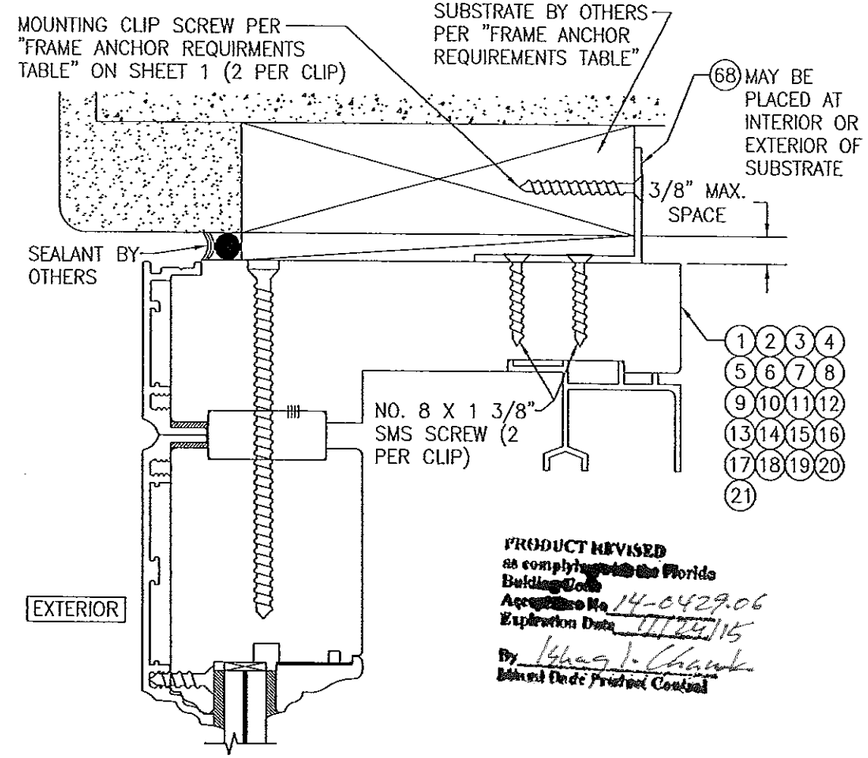


PRODUCT REVISED
as complying with the Florida Building Code
Acceptance No. 14-0429.06
Expiration Date 01/26/15
By Wayne L. Chank
Miami-Dade Product Control

OPTIONAL MOUNTING CLIP DETAIL AT HEAD & SIDES

(2 PANEL DEEP HEAD SECTION SHOWN, ALL OTHER APPROVED HEAD & SIDE CONDITIONS ARE INSTALLED THE SAME)
(FOR DETAIL NOT SHOWN, SEE OTHER SECTIONS)

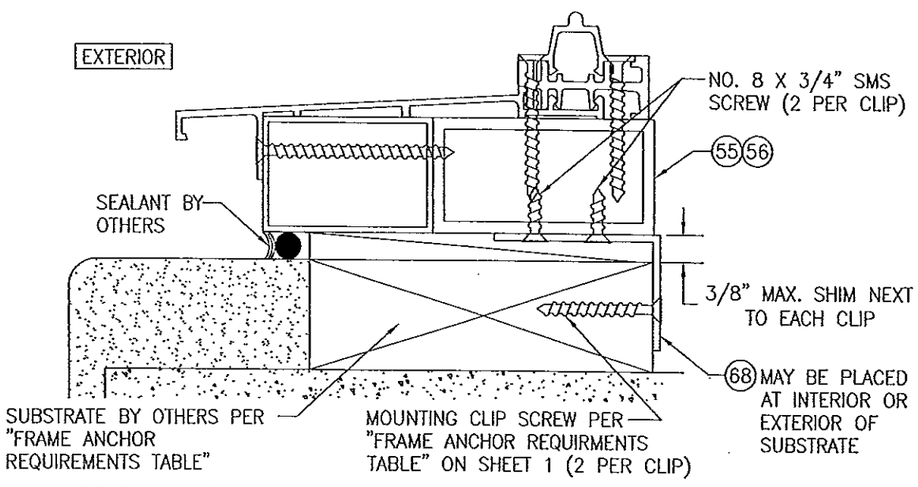


OPTIONAL MOUNTING CLIP DETAIL AT 1 & 2 PANEL DEEP SILLS

(1 PANEL DEEP SILL SECTION SHOWN, 2 PANEL DEEP SILL IS INSTALLED THE SAME)
(FOR DETAIL NOT SHOWN, SEE OTHER SECTIONS)
(NOT APPLICABLE WITH FLUSH MOUNT SILL)

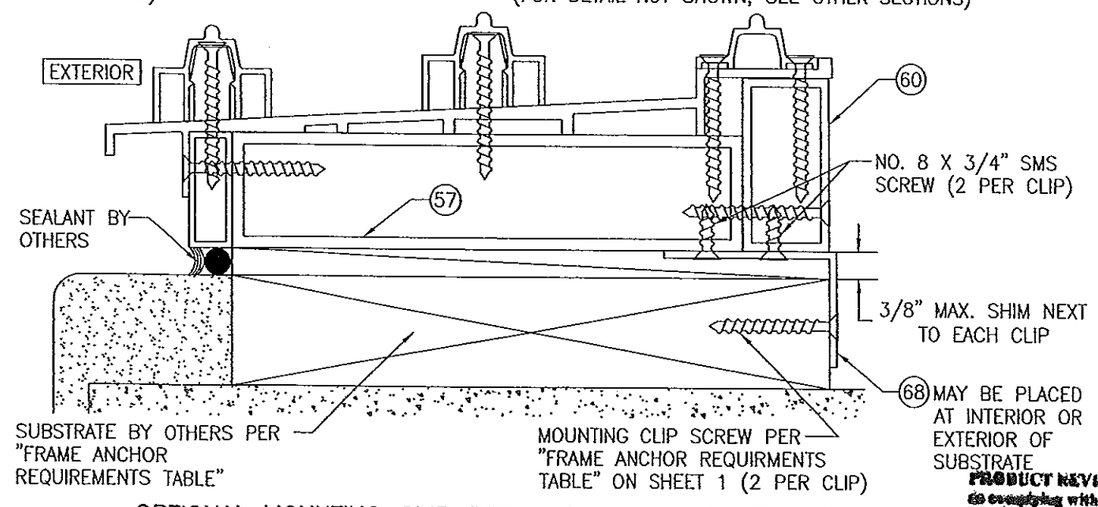


OPTIONAL MOUNTING CLIP DETAIL AT 3 & 4 PANEL DEEP SILLS

(3 PANEL DEEP SILL SECTION SHOWN, 4 PANEL DEEP SILL IS INSTALLED THE SAME)
(FOR DETAIL NOT SHOWN, SEE OTHER SECTIONS)
(NOT APPLICABLE WITH FLUSH MOUNT SILL)

PRODUCT REVISED
as complying with the Florida Building Code
Acceptance No. 13-0717.10
Expiration Date 01/26/15
By
Miami-Dade Product Control

NOV 06 2013

| NO. | REVISION DESCRIPTION | BY | DATE |
|---|---|---|---|
| | | | |

DRAWN BY: W.R.M. | CHECKED BY: W.W.S.
PLOT: 1=24 | DATE: 04/04/09

DRAWING TITLE
LIFT & SLIDE BRONZE CLAD SLIDING GLASS IMPACT DOORS

MANUFACTURER
PEETZ WINDOWS & DOORS
15951 S.W. 41ST STREET, SUITE 150
WESTON, FL 33331
954-659-3887

CONSULTANTS
W. W. SCHAEFER ENGINEERING & CONSULTING, P.A. (CA 6809)
7480 150TH COURT NORTH
PALM BEACH GARDENS, FL 33418
PHONE: 561-744-3424

CERTIFICATION
NOV 06 2013
WARREN W. SCHAEFER, P.E.
P.E. NO. 44135

DRAWING NO. 1632 | REV. B
SHEET NO. 27 OF 38

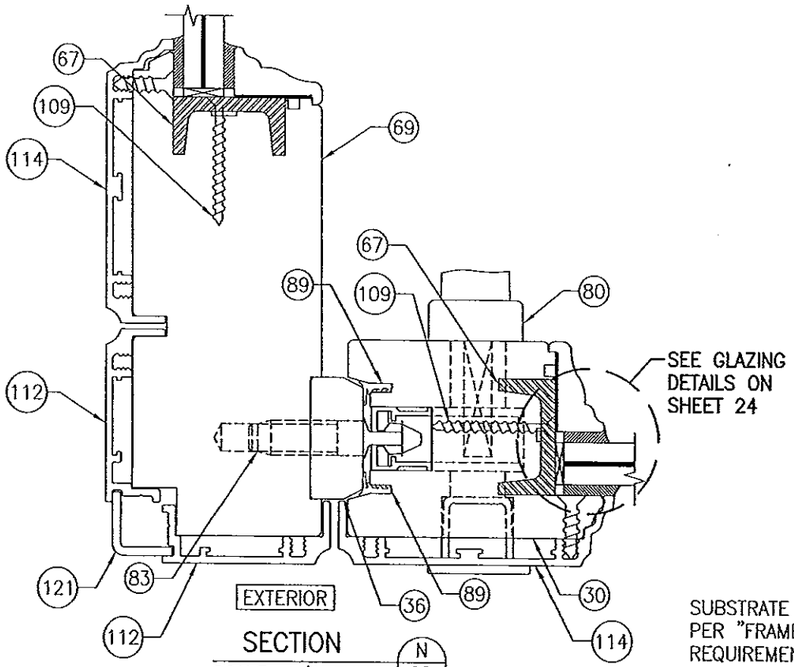


SECTION (N/28)
SCALE: 1/2 FULL

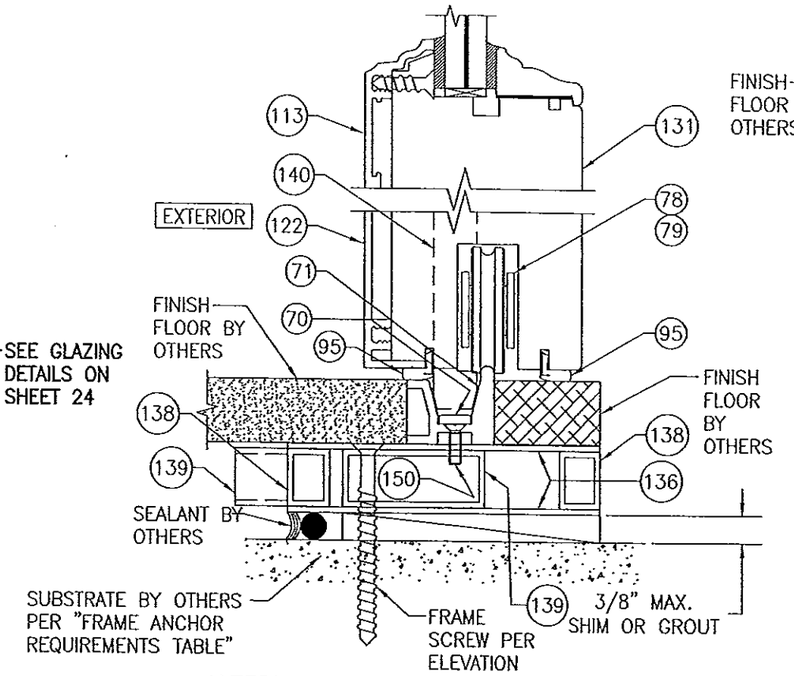


ALTERNATE FLUSH MOUNT SILL DETAIL
(ALTERNATE TO SECTION A1/14)

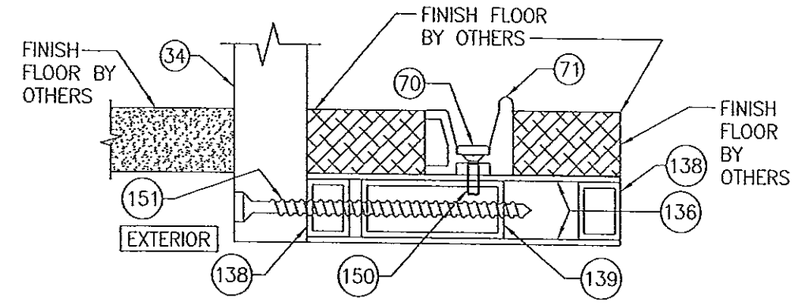


ALTERNATE FLUSH MOUNT SILL DETAIL
(ALTERNATE TO SECTION A2/14)
(FOR INSTALLATION NOT SHOWN, SEE ALTERNATE SECTION A1 ON THIS SHEET)

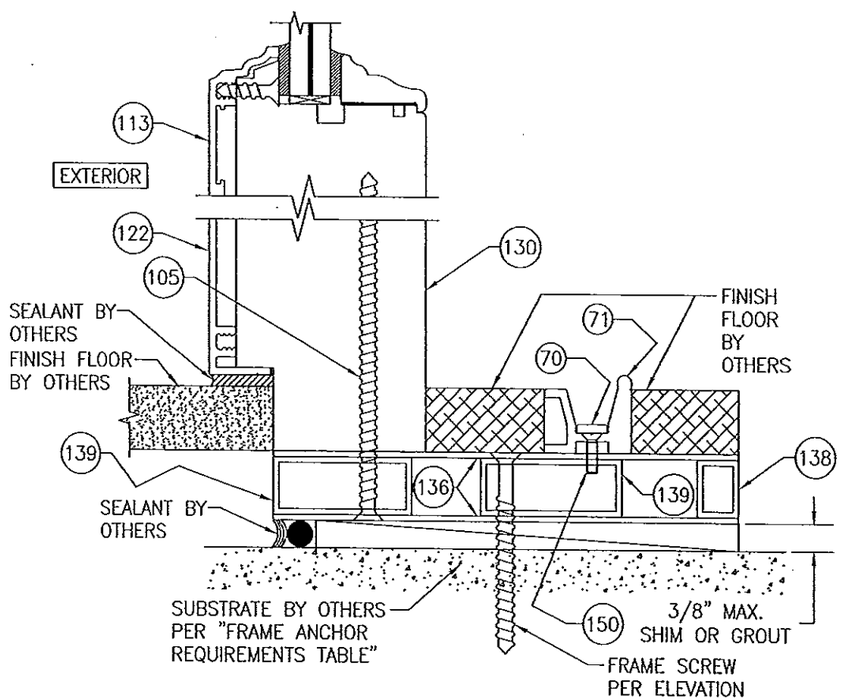


ALTERNATE FLUSH MOUNT SILL DETAIL
(ALTERNATE TO SECTION F1/15)

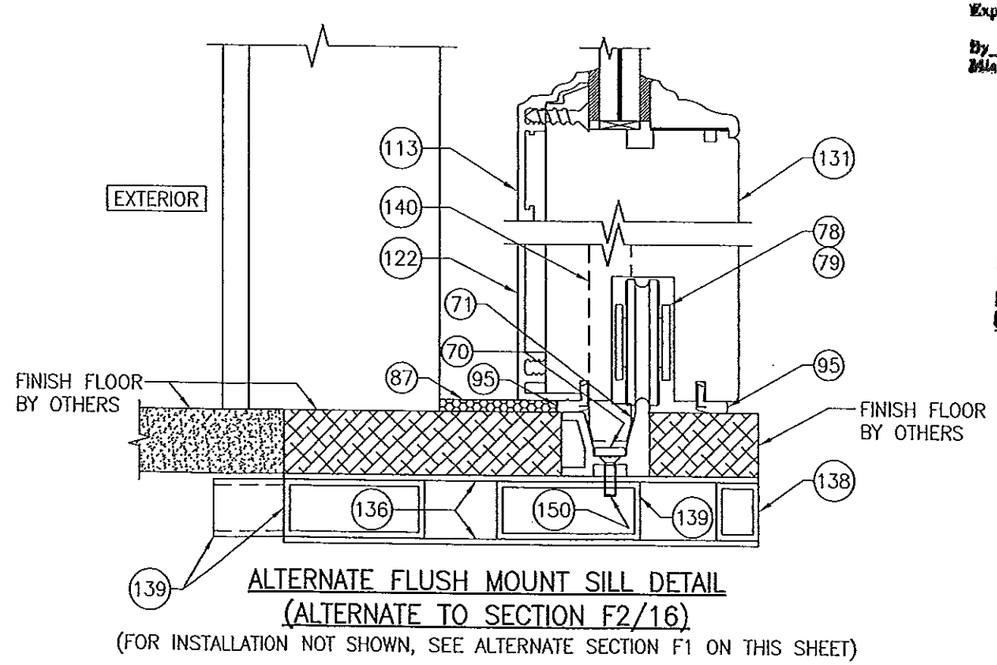


ALTERNATE FLUSH MOUNT SILL DETAIL
(ALTERNATE TO SECTION F2/16)
(FOR INSTALLATION NOT SHOWN, SEE ALTERNATE SECTION F1 ON THIS SHEET)

**PRODUCT REVISED**
as complying with the Florida Building Code
Acceptance No. 14-0429.06
Expiration Date 11/24/15
By [signature]
Miami Dade Product Control

**PRODUCT REVISED**
as complying with the Florida Building Code
Acceptance No. 13-0717.10
Expiration Date 11/24/15
By [signature]
Miami Dade Product Control

WARREN W. SCHAEFER LICENSE NO. 44135 STATE OF FLORIDA PROFESSIONAL ENGINEER

| DRAWN BY: W.R.M. | CHECKED BY: W.W.S. |
|---|---|
| PLOT: 1=2 | DATE: 04/04/09 |

| NO. | REVISION DESCRIPTION | BY | DATE |
|---|---|---|---|
| | | | |

DRAWING TITLE
LIFT & SLIDE BRONZE CLAD SLIDING GLASS IMPACT DOORS

MANUFACTURER
PEETZ WINDOWS & DOORS
15951 S.W. 41ST STREET; SUITE 150
WESTON, FL 33331
954-659-3887

CONSULTANTS
W. W. SCHAEFER ENGINEERING & CONSULTING, P.A. (CA 6809)
7480 150TH COURT NORTH
PALM BEACH GARDENS, FL 33418
PHONE: 561-744-3424

CERTIFICATION
NOV 06 2013
WARREN W. SCHAEFER, P.E.
P.E. NO. 44135

DRAWING NO. 1632
REV. B
SHEET NO. 28 OF 38

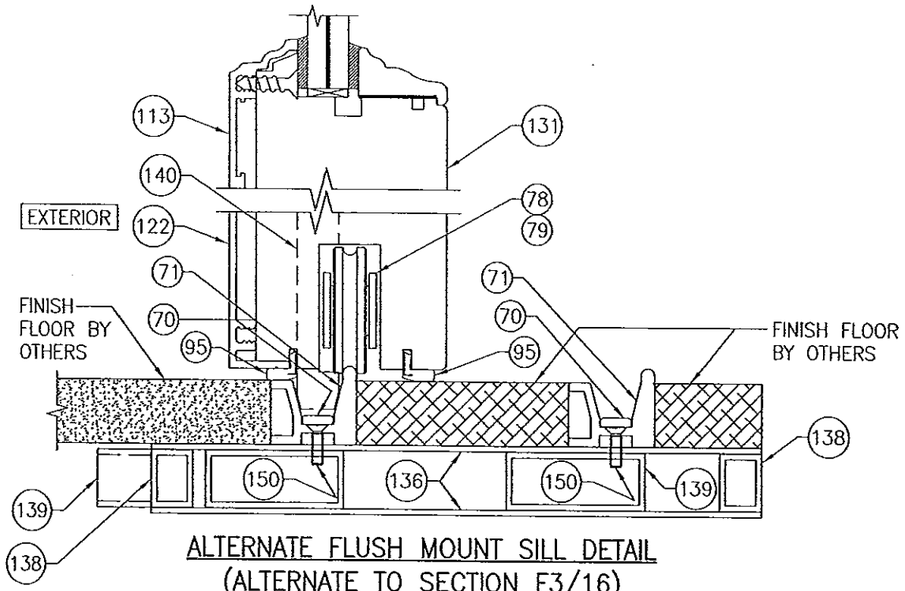


ALTERNATE FLUSH MOUNT SILL DETAIL
(ALTERNATE TO SECTION F3/16)
(FOR INSTALLATION NOT SHOWN, SEE ALTERNATE SECTION F1 ON SHEET 28)

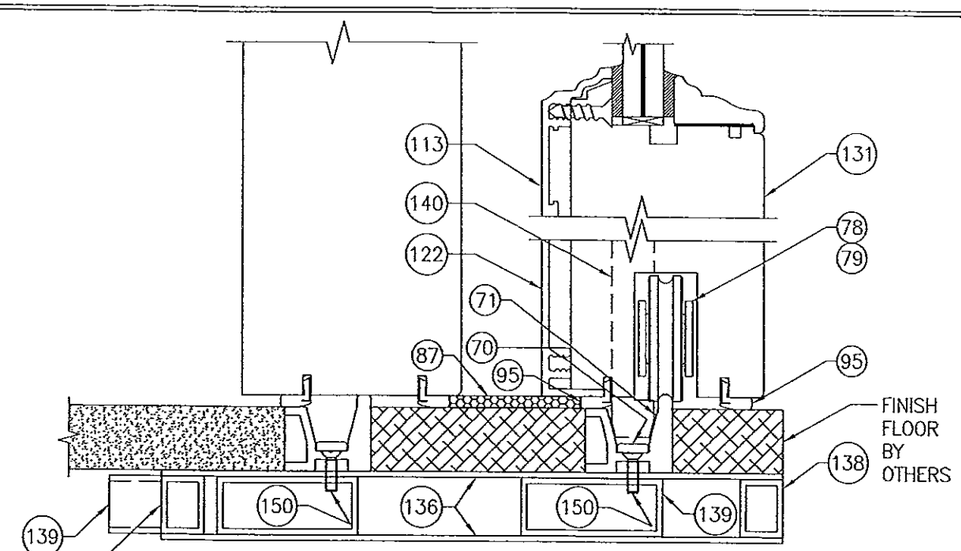


ALTERNATE FLUSH MOUNT SILL DETAIL
(ALTERNATE TO SECTION F4/16)
(FOR INSTALLATION NOT SHOWN, SEE ALTERNATE SECTION F1 ON SHEET 28)

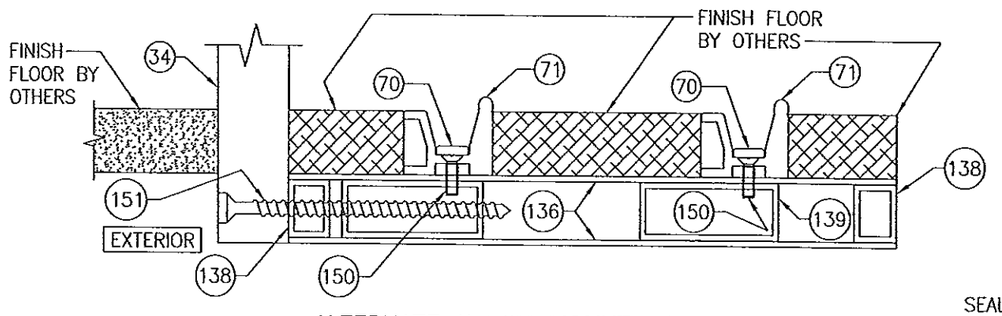


ALTERNATE FLUSH MOUNT SILL DETAIL
(ALTERNATE TO SECTION F7/17)
(FOR INSTALLATION NOT SHOWN, SEE ALTERNATE SECTION F1 ON SHEET 28)

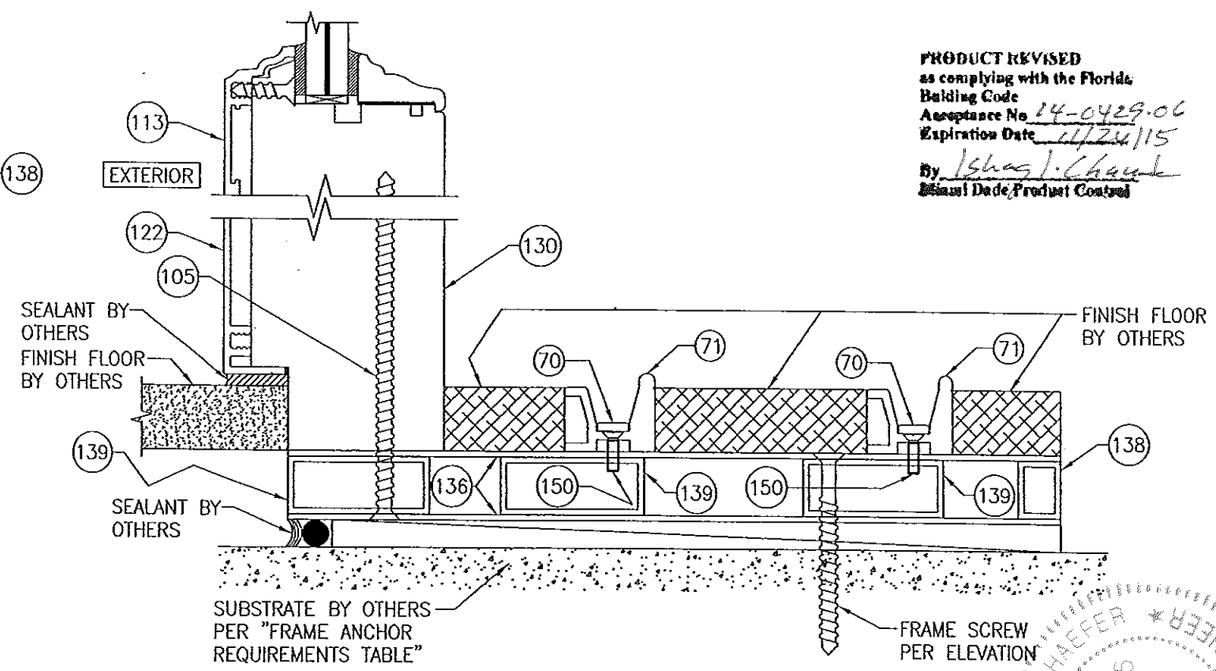


ALTERNATE FLUSH MOUNT SILL DETAIL
(ALTERNATE TO SECTION J1/18)

PRODUCT REVISED
as complying with the Florida Building Code
Acceptance No. 14-0429.06
Expiration Date 11/24/15
By Ishaq I. Chaudhry
Miami Dade Product Control

PRODUCT REVISED
as complying with the Florida Building Code
Acceptance No. 13-0717.10
Expiration Date 11/24/15
By
Miami Dade Product Control

WARREN W. SCHAEFER LICENSE No 44135 STATE OF FLORIDA PROFESSIONAL ENGINEER

| NO. | REVISION DESCRIPTION | BY | DATE |
|---|---|---|---|
| | | | |

DRAWN BY: W.R.M. | CHECKED BY: W.W.S.
PLOT: 1=2 | DATE: 04/04/09

DRAWING TITLE
LIFT & SLIDE BRONZE CLAD SLIDING GLASS IMPACT DOORS

MANUFACTURER
PEETZ WINDOWS & DOORS
15951 S.W. 41ST STREET; SUITE 150
WESTON, FL 33331
954-659-3887

CONSULTANTS
W. W. SCHAEFER ENGINEERING & CONSULTING, P.A. (CA 6809)
7480 150TH COURT NORTH
PALM BEACH GARDENS, FL 33418
PHONE: 561-744-3424

CERTIFICATION
NOV 06 2013
WARREN W. SCHAEFER, P.E.
P.E. NO. 44135

DRAWING NO. 1632 | REV. B
SHEET NO. 29 OF 38

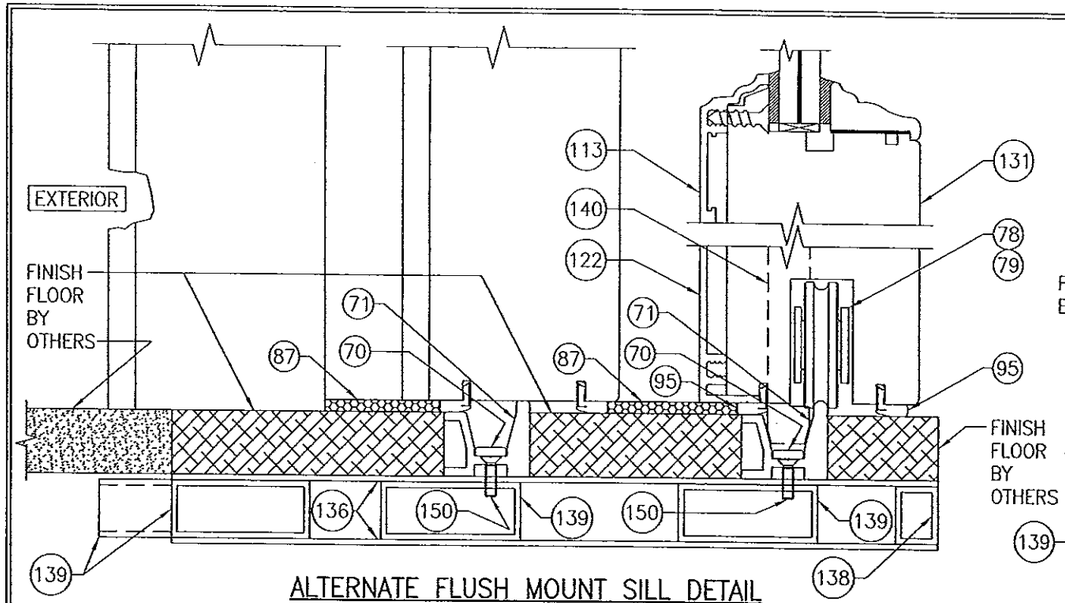


ALTERNATE FLUSH MOUNT SILL DETAIL
(ALTERNATE TO SECTIONS J2/19 & J3/19)
(FOR INSTALLATION NOT SHOWN, SEE ALTERNATE SECTION J1 ON SHEET 29)

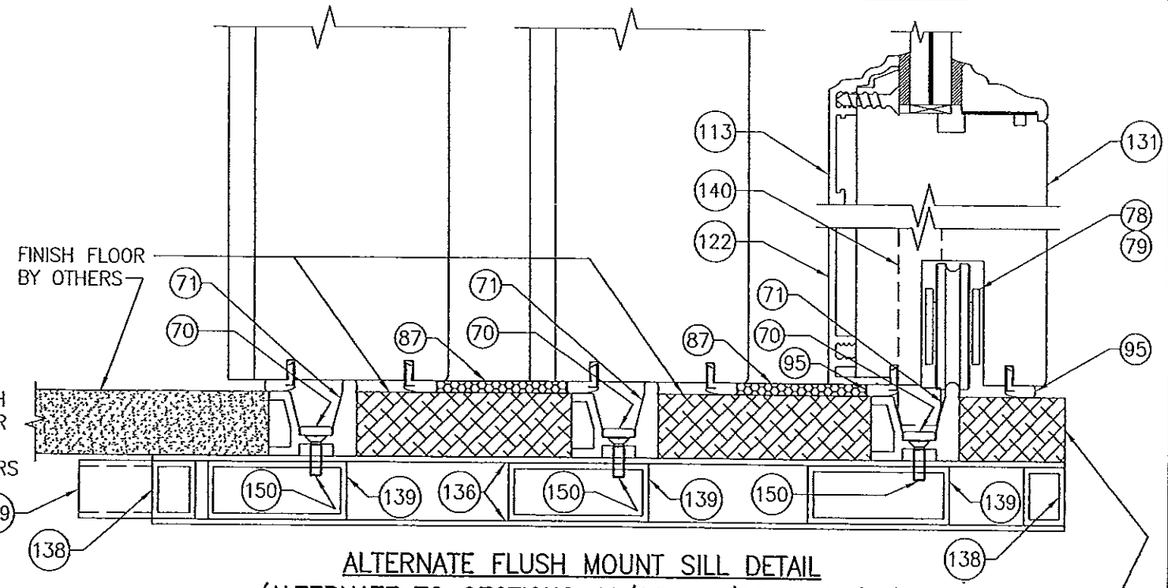


ALTERNATE FLUSH MOUNT SILL DETAIL
(ALTERNATE TO SECTIONS J4/20, J5/20 & J6/21)
(FOR INSTALLATION NOT SHOWN, SEE ALTERNATE SECTION J1 ON SHEET 29)

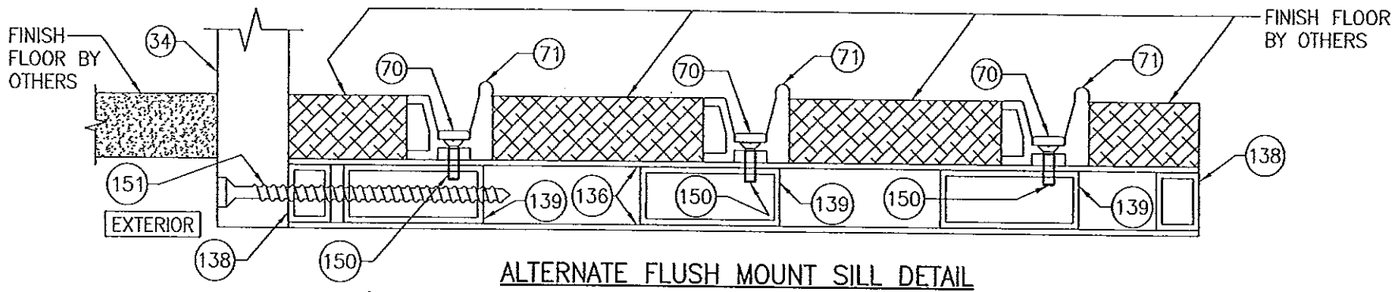


ALTERNATE FLUSH MOUNT SILL DETAIL
(ALTERNATE TO SECTIONS J7/21, J8/21, J9/22 & J10/22)
(FOR INSTALLATION NOT SHOWN, SEE ALTERNATE SECTION J1 ON SHEET 29)

PRODUCT REVISED
as complying with the Florida
Building Code
Acceptance No 14-0429.06
Expiration Date 11/24/15
By [illegible]
[redacted]

PRODUCT REVISED
as complying with the Florida
Building Code
Acceptance No 13-0717.10
Expiration Date 11/04/15
[redacted]

WARREN W. SCHAEFER ★ ENGINEER ★ PROFESSIONAL
No 44135
STATE OF FLORIDA

| DRAWN BY: W.R.M. | CHECKED BY: W.W.S. |
|---|---|
| PLOT: 1=2 | DATE: 04/04/09 |

| NO. | REVISION DESCRIPTION | BY | DATE |
|---|---|---|---|
| | | | |

DRAWING TITLE
LIFT & SLIDE BRONZE CLAD SLIDING GLASS IMPACT DOORS

MANUFACTURER
PEETZ WINDOWS & DOORS
15951 S.W. 41ST STREET; SUITE 150
WESTON, FL 33331
954-659-3887

CONSULTANTS
W. W. SCHAEFER ENGINEERING & CONSULTING, P.A. (CA 6809)
7480 150TH COURT NORTH
PALM BEACH GARDENS, FL 33418
PHONE: 561-744-3424

CERTIFICATION
NOV 06 2013
WARREN W. SCHAEFER, P.E.
P.E. NO. 44135

DRAWING NO. 1632
REV. B
SHEET NO. 30 OF 38

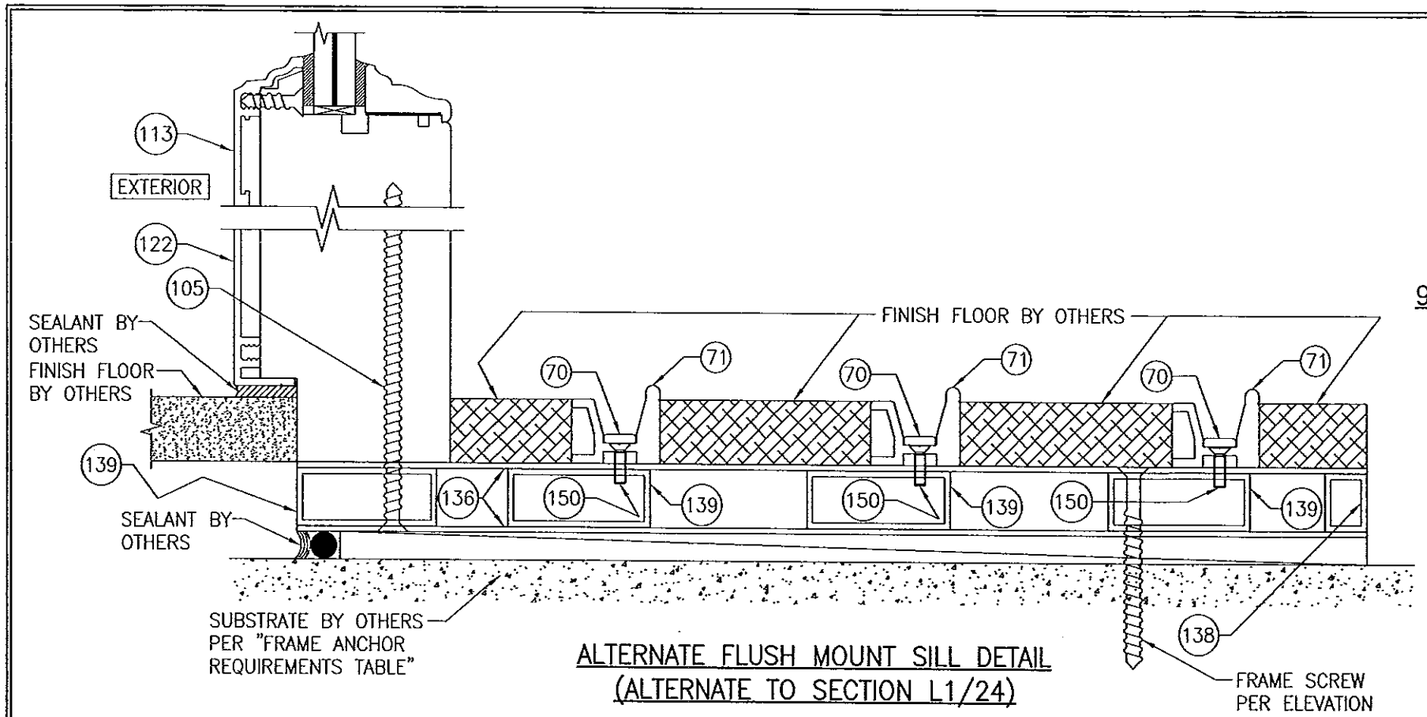


ALTERNATE FLUSH MOUNT SILL DETAIL
(ALTERNATE TO SECTION L1/24)

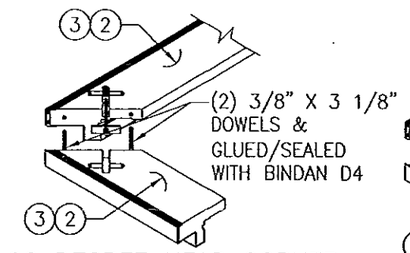


90 DEGREE HEAD CORNER:
2 PANEL TO 2 PANEL

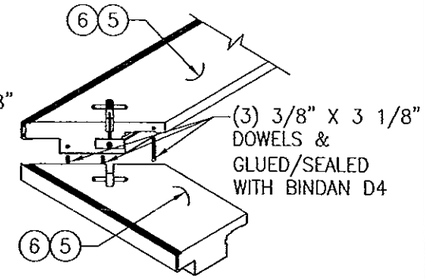


90 DEGREE HEAD CORNER:
3 PANEL TO 3 PANEL

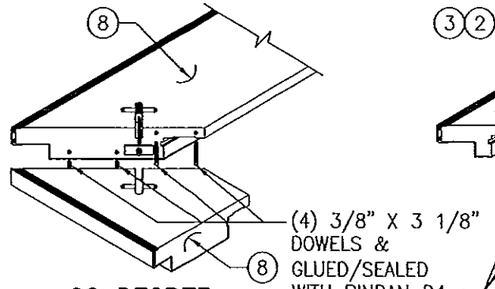


90 DEGREE HEAD CORNER:
4 PANEL TO 4 PANEL

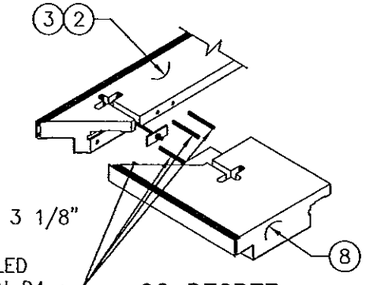


90 DEGREE HEAD CORNER:
2 PANEL TO 4 PANEL

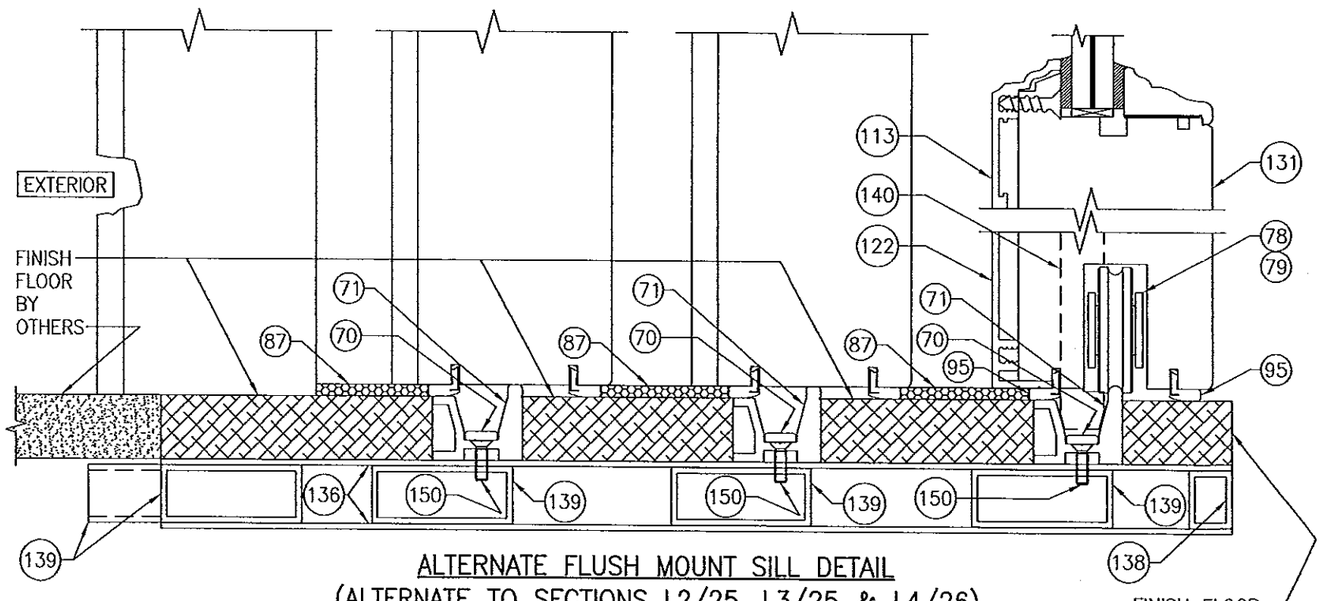


ALTERNATE FLUSH MOUNT SILL DETAIL
(ALTERNATE TO SECTIONS L2/25, L3/25 & L4/26)
(FOR INSTALLATION NOT SHOWN, SEE ALTERNATE SECTION L1 ON THIS SHEET)

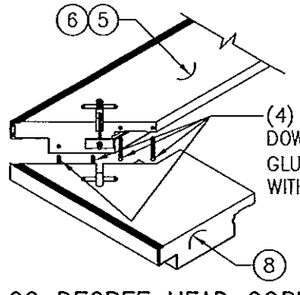


90 DEGREE HEAD CORNER:
3 PANEL TO 4 PANEL

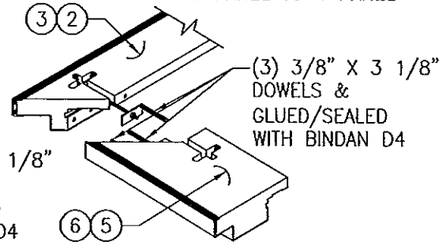


90 DEGREE HEAD CORNER:
2 PANEL TO 3 PANEL

ALL 90 DEGREE HEAD CORNERS:
CORNERS ARE JOINED WITH (2) 1" X 3 1/8" X 3/16" ALUMINUM PLATES, A m6 X 7 1/2" LONG THREADED ROD AND 2 m6 NUTS. ALL WOOD MEMBER CORNER SURFACES ARE GLUED/SEALED WITH BINDAN D4.

PRODUCT REVISED
as complying with the Florida Building Code
Acceptance No. 14-0429.06
Expiration Date 11/24/15
By Ishan I. Chanda
Miami Dade Product Control

PRODUCT REVISED
as complying with the Florida Building Code
Acceptance No. 13-0717.10
Expiration Date 11/24/15
By Ishan I. Chanda
Miami Dade Product Control

WARREN W. SCHAEFER LICENSE No. 44135 STATE OF FLORIDA PROFESSIONAL ENGINEER

| DRAWN BY: W.R.M. | CHECKED BY: W.W.S. |
|---|---|
| PLOT: 1=2 | DATE: 04/04/09 |

| NO. | REVISION DESCRIPTION | BY | DATE |
|---|---|---|---|
| | | | |

DRAWING TITLE
LIFT & SLIDE BRONZE CLAD SLIDING GLASS IMPACT DOORS

MANUFACTURER
PEETZ WINDOWS & DOORS
15951 S.W. 41ST STREET; SUITE 150
WESTON, FL 33331
954-659-3887

CONSULTANTS
W. W. SCHAEFER ENGINEERING & CONSULTING, P.A. (CA 6809)
7480 150TH COURT NORTH
PALM BEACH GARDENS, FL 33418
PHONE: 561-744-3424

CERTIFICATION
NOV 06 2013
WARREN W. SCHAEFER, P.E.
P.E. NO. 44135

DRAWING NO. 1632
REV. B
SHEET NO. 31 OF 38

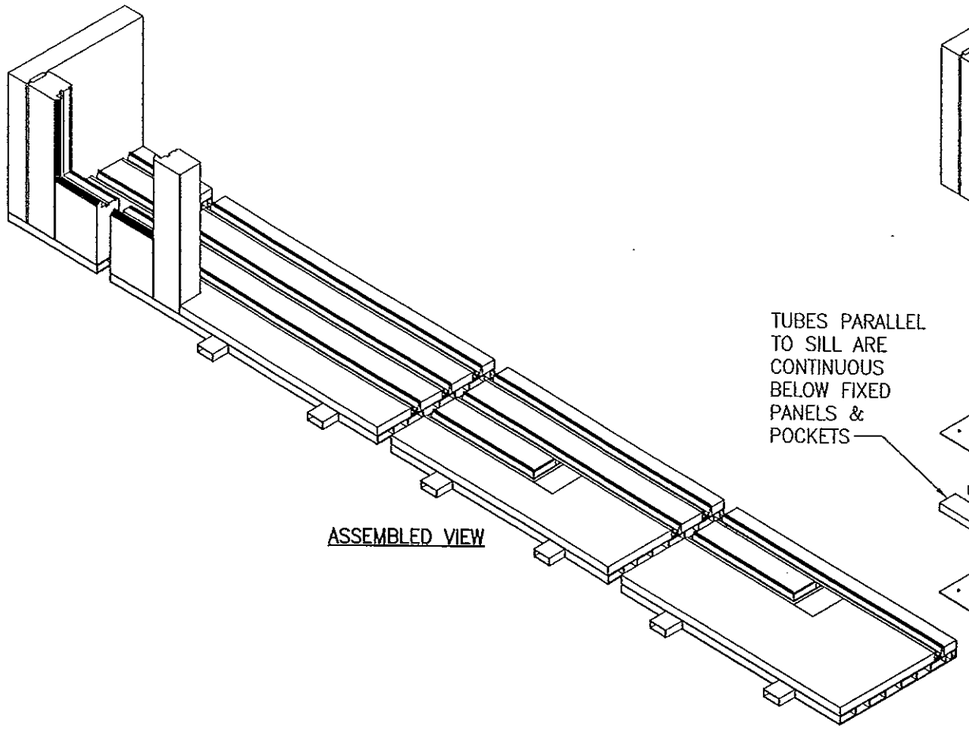

ASSEMBLED VIEW

TUBE TO TUBE CONNECTIONS & PLATE TO TUBE SURFACES ARE JOINED WITH PARSON ADHESIVE'S PARTITE 7310 METACRYLATE ADHESIVE. THE ADHESIVE SHALL BE APPLIED TO THE FULL SURFACE OF THE END CONNECTIONS & THE MEETING SURFACES BETWEEN PLATES & TUBES.

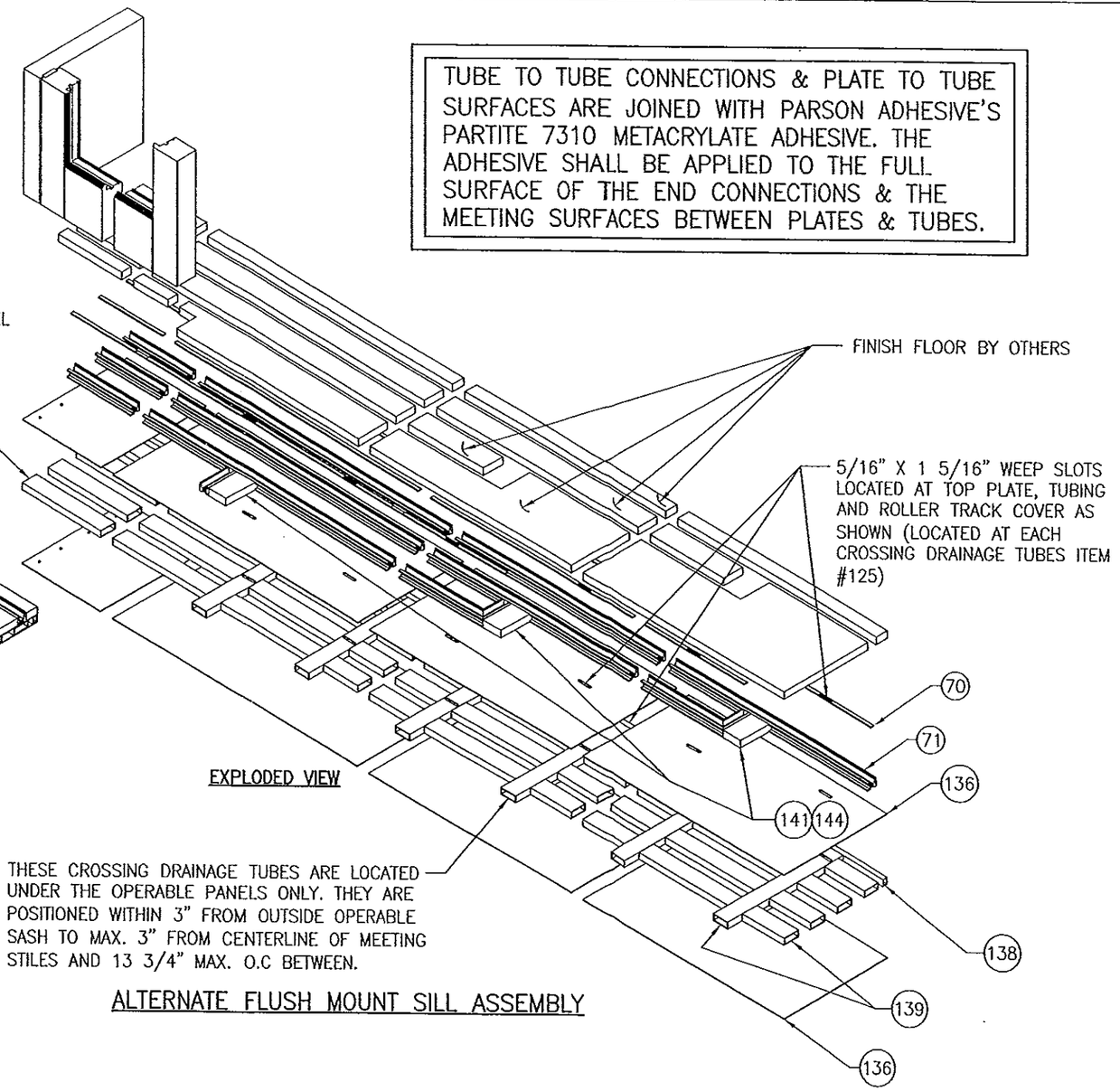


EXPLODED VIEW

THESE CROSSING DRAINAGE TUBES ARE LOCATED UNDER THE OPERABLE PANELS ONLY. THEY ARE POSITIONED WITHIN 3" FROM OUTSIDE OPERABLE SASH TO MAX. 3" FROM CENTERLINE OF MEETING STILES AND 13 3/4" MAX. O.C BETWEEN.

ALTERNATE FLUSH MOUNT SILL ASSEMBLY

ALTERNATE FLUSH MOUNT SILL CORNER CONSTRUCTION DETAIL

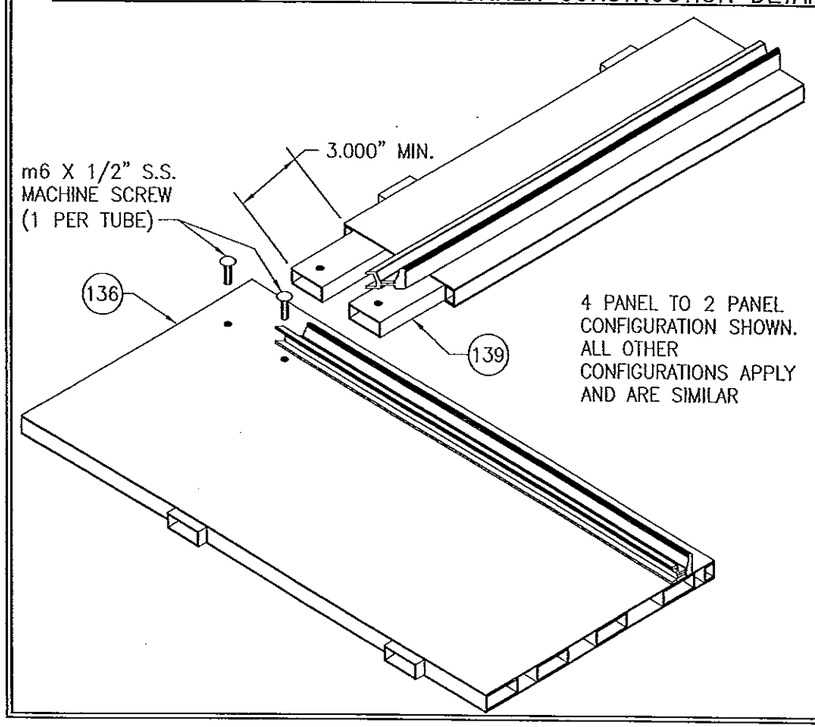


**PRODUCT REVISED**
as complying with the Florida
Building Code
Acceptance No. 14-0429.06
Expiration Date 11/24/15
By Ishwar L. Chand
Miami Dade Product Control

**PRODUCT REVISED**
as complying with the Florida
Building Code
Acceptance No. 13-0717.10
Expiration Date 11/24/15
By Ishwar L. Chand
Miami Dade Product Control

WARREN W. SCHAEFER LICENSE No. 44135 STATE OF FLORIDA PROFESSIONAL ENGINEER

| DRAWN BY: W.R.U. | CHECKED BY: W.W.S. |
|---|---|
| PLOT: 1=2 | DATE: 04/04/09 |

| NO. | REVISION DESCRIPTION | BY | DATE |
|---|---|---|---|
| | | | |

DRAWING TITLE
LIFT & SLIDE BRONZE CLAD SLIDING GLASS IMPACT DOORS

MANUFACTURER
PEETZ WINDOWS & DOORS
15951 S.W. 41ST STREET; SUITE 150
WESTON, FL 33331
954-659-3887

CONSULTANTS
W. W. SCHAEFER ENGINEERING & CONSULTING, P.A. (CA 6809)
7480 150TH COURT NORTH
PALM BEACH GARDENS, FL 33418
PHONE: 561-744-3424

CERTIFICATION
NOV 06 2013
WARREN W. SCHAEFER, P.E.
P.E. NO. 44135

DRAWING NO. 1632
REV. B
SHEET NO. 32 OF 38

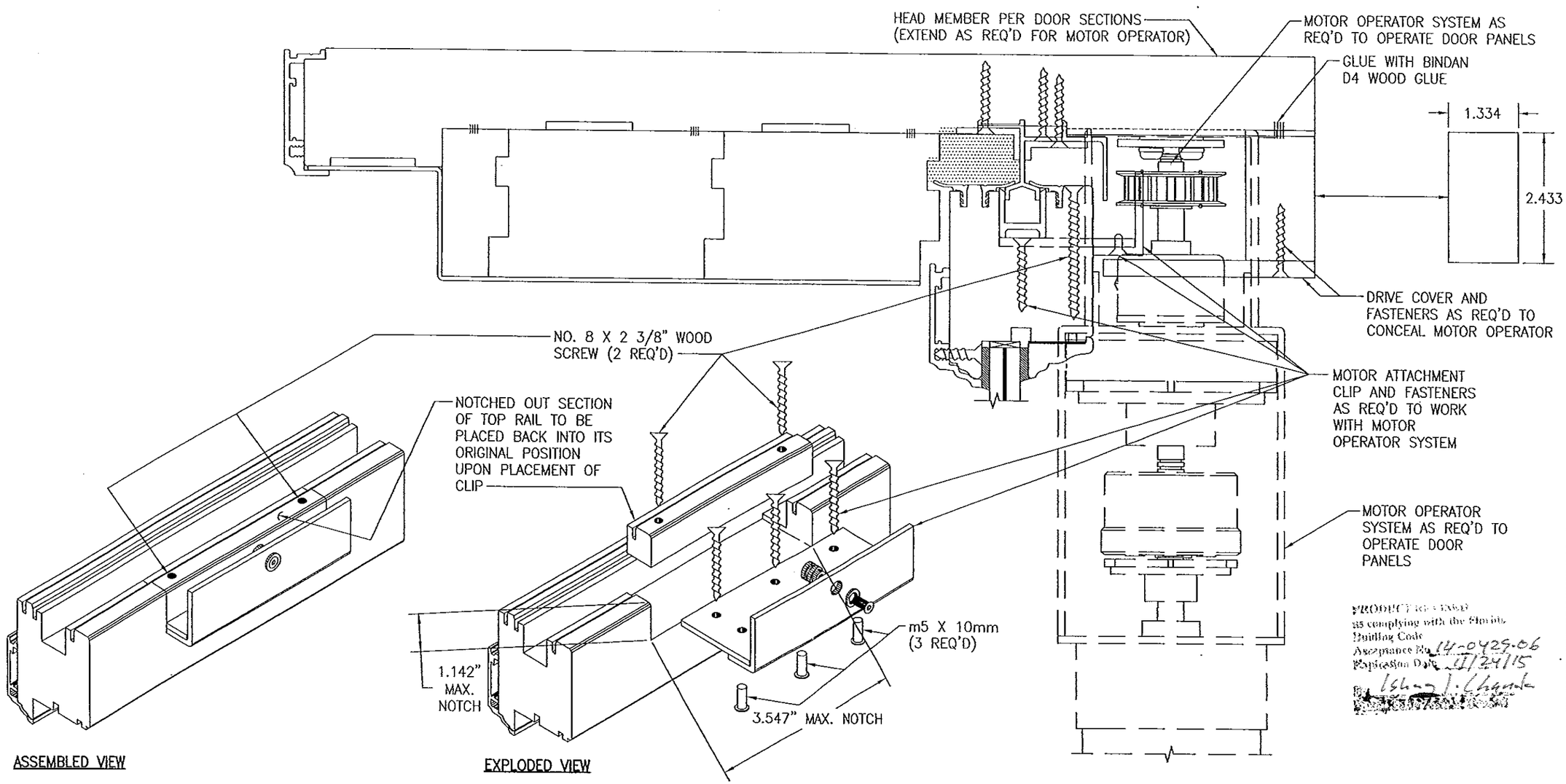


PRODUCT REVIEWED
as complying with the Florida
Building Code
Acceptance No. 14-0429.06
Expiration Date 11/24/15

## OPTIONAL MOTOR OPERATOR DETAIL

WITH USE OF MOTOR OPERATOR SYSTEM, THERE SHALL BE NO MODIFICATIONS TO THE DOOR FRAME OR DOOR PANEL OTHER THAN THOSE SHOWN HERE-IN.

NOTE: MOTOR OPERATION IS APPLICABLE WITH LOCKING HARDWARE ITEM #79. IT IS NOT APPLICABLE WITH LOCKING HARDWARE ITEM #78.

PRODUCT REVIEWED
as complying with the Florida
Building Code
Acceptance No. 13-0717.10
Expiration Date 11/24/15
By
Miami Dade Product Control

WARREN W. SCHAEFER LICENSE No. 44135 STATE OF FLORIDA PROFESSIONAL ENGINEER

| DRAWN BY: W.R.M. | CHECKED BY: W.W.S. |
|---|---|
| PLOT: 1=2 | DATE: 04/04/09 |

| NO. | REVISION DESCRIPTION | BY | DATE |
|---|---|---|---|
| | | | |

DRAWING TITLE
LIFT & SLIDE BRONZE CLAD SLIDING GLASS IMPACT DOORS

MANUFACTURER
PEETZ WINDOWS & DOORS
15951 S.W. 41ST STREET; SUITE 150
WESTON, FL 33331
954-659-3887

CONSULTANTS
W. W. SCHAEFER ENGINEERING & CONSULTING, P.A. (CA 6809)
7480 150TH COURT NORTH
PALM BEACH GARDENS, FL 33418
PHONE: 561-744-3424

CERTIFICATION
NOV 06 2013
WARREN W. SCHAEFER, P.E.
P.E. NO. 44135

DRAWING NO. 1632
REV. B
SHEET NO. 33 OF 38

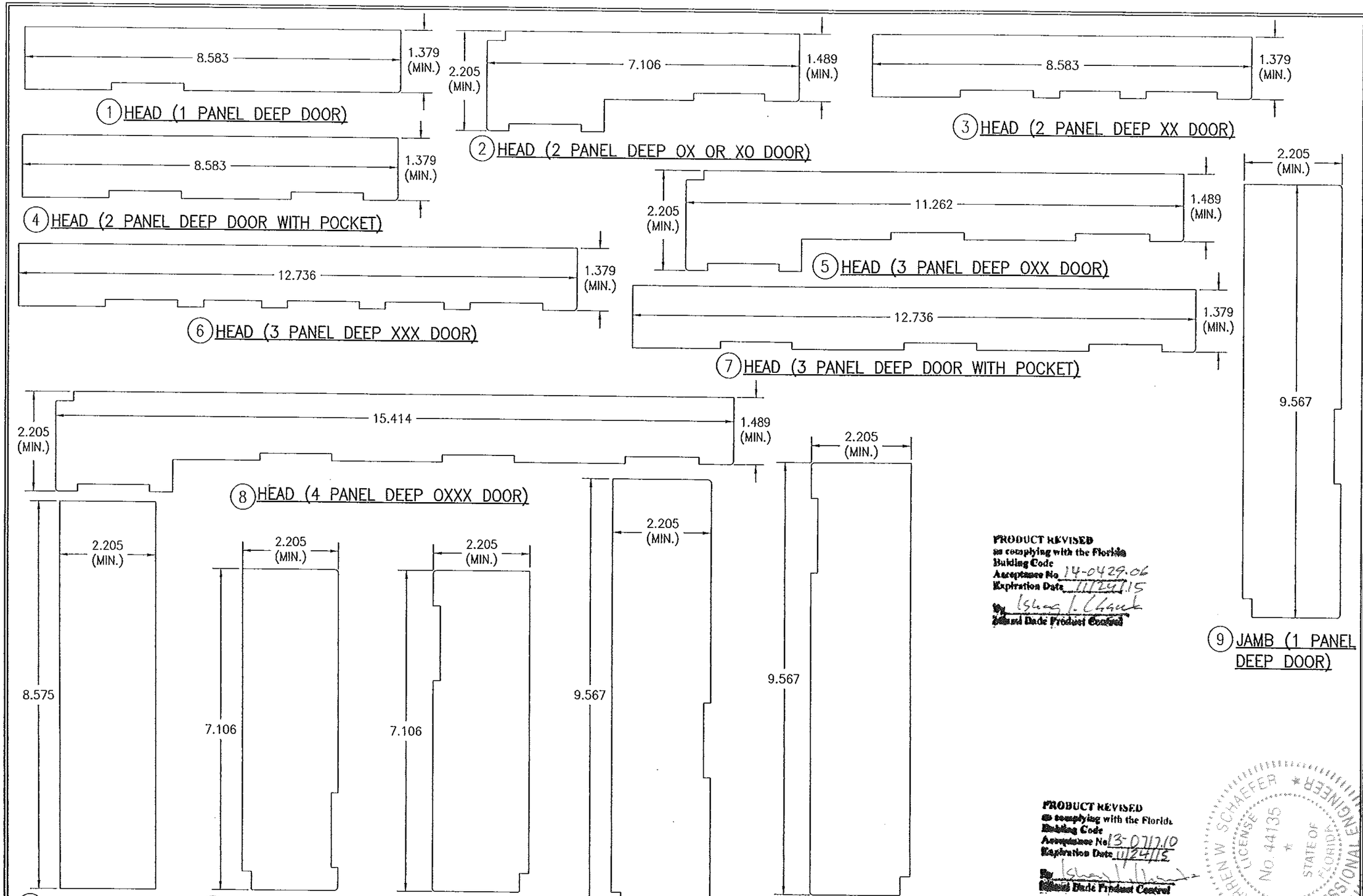


PRODUCT REVISED
as complying with the Florida
Building Code
Acceptance No. 14-0429.06
Expiration Date 11/24/15
By Ishan I. Chauhan
Miami Dade Product Control

PRODUCT REVISED
as complying with the Florida
Building Code
Acceptance No. 13-0717.10
Expiration Date 11/24/15
By Ishan I. Chauhan
Miami Dade Product Control

WARREN W. SCHAEFER LICENSE No. 44135 STATE OF FLORIDA PROFESSIONAL ENGINEER

| DRAWN BY: W.R.V. | CHECKED BY: W.W.S. |
|---|---|
| PLOT: 1=24 | DATE: 04/04/09 |

| NO. | REVISION DESCRIPTION | BY | DATE |
|---|---|---|---|
| | | | |

DRAWING TITLE
LIFT & SLIDE BRONZE CLAD SLIDING GLASS IMPACT DOORS

MANUFACTURER
PEETZ WINDOWS & DOORS
15951 S.W. 41ST STREET; SUITE 150
WESTON, FL 33331
954-659-3887

CONSULTANTS
W. W. SCHAEFER ENGINEERING & CONSULTING, P.A. (CA 6809)
7480 150TH COURT NORTH
PALM BEACH GARDENS, FL 33418
PHONE: 561-744-3424

CERTIFICATION
NOV 06 2013
WARREN W. SCHAEFER, P.E.
P.E. NO. 44135

DRAWING NO. 1632
REV. B
SHEET NO. 34 OF 38

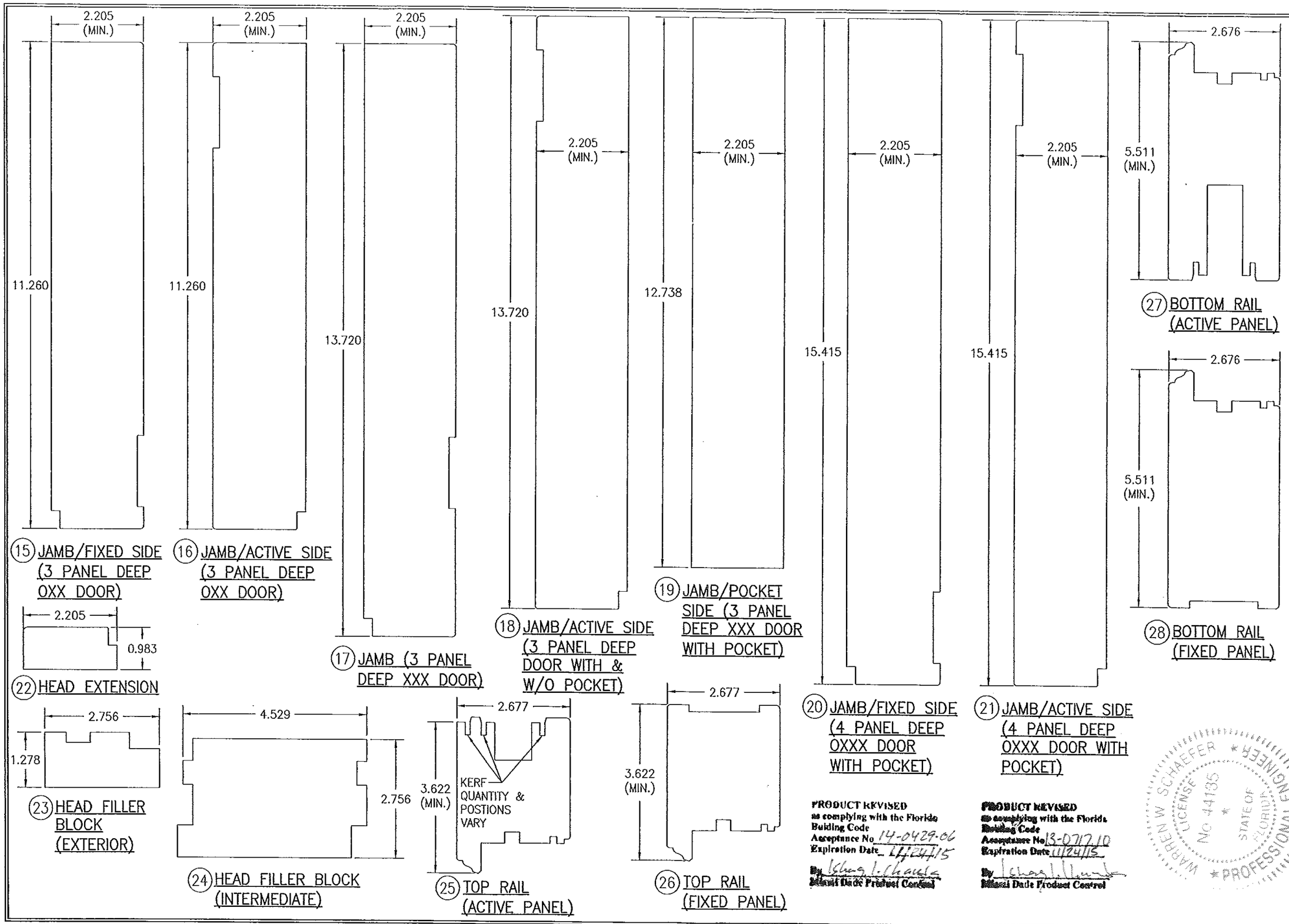


| DRAWN BY: W.R.W. | CHECKED BY: W.W.S. |
|---|---|
| PLOT: 1=24 | DATE: 04/04/09 |

| NO. | REVISION DESCRIPTION | BY | DATE |
|---|---|---|---|
| | | | |

DRAWING TITLE
LIFT & SLIDE BRONZE CLAD SLIDING GLASS IMPACT DOORS

MANUFACTURER
PEETZ WINDOWS & DOORS
15951 S.W. 41ST STREET; SUITE 150
WESTON, FL 33331
954-659-3887

CONSULTANTS
W. W. SCHAEFER ENGINEERING & CONSULTING, P.A. (CA 6809)
7480 150TH COURT NORTH
PALM BEACH GARDENS, FL 33418
PHONE: 561-744-3424

CERTIFICATION
NOV 06 2013
WARREN W. SCHAEFER, P.E.
P.E. NO. 44135

DRAWING NO. 1632 REV. B

SHEET NO. 35 OF 38

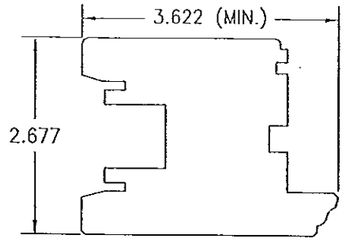


(29) STILE (ACTIVE PANEL)

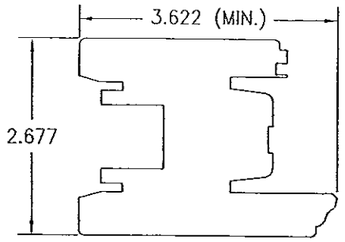


(30) MEETING STILE

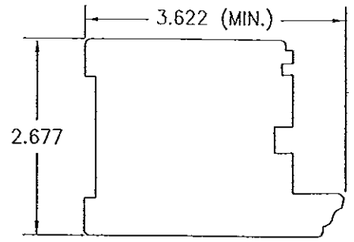


(32) STILE (FIXED PANEL)

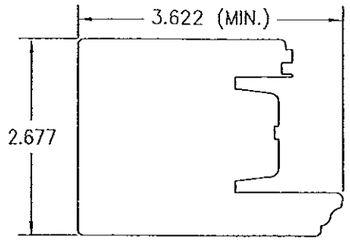


(33) INTERLOCK STILE

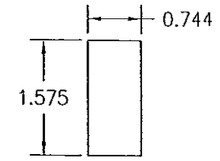


(35) SILL BASE EXTENSION (1 PANEL DEEP WITH POCKET)

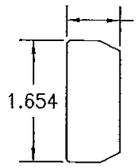


(36) LOCKING BOLT BLOCK

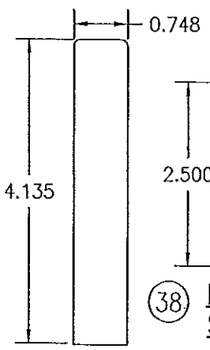


(37) POCKET COVER

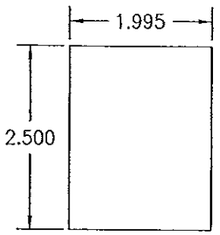


(38) POCKET COVER SUPPORT BLOCK

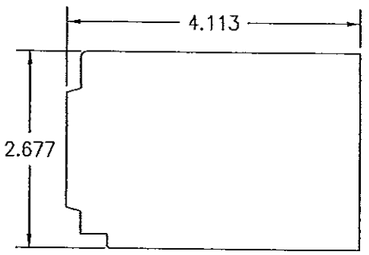


(39) POCKET STILE EXTENSION

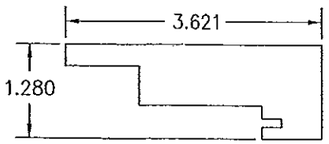


(40) ACTIVE INTERLOCK POCKET ASTRAGAL

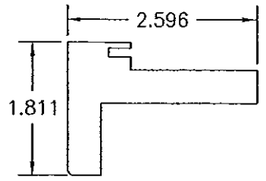


(41) FIXED INTERLOCK POCKET ASTRAGAL

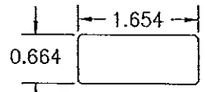


(42) CONTINUOUS KEY

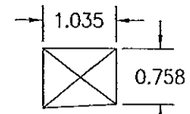


(43) FIXED SILL BLOCKING

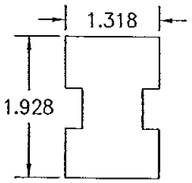


(44) TRACK BRIDGING

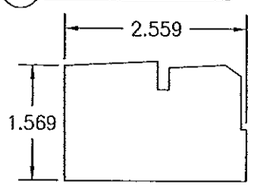


(45) SILL BASE EXTENSION (2 PANEL DEEP DOOR WITH POCKET)

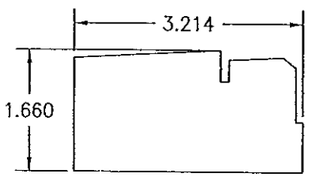


(46) SILL BASE EXTENSION (3 PANEL DEEP DOOR WITH POCKET)

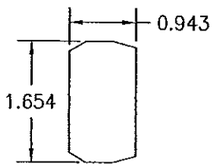


(47) DECORATIVE CAP

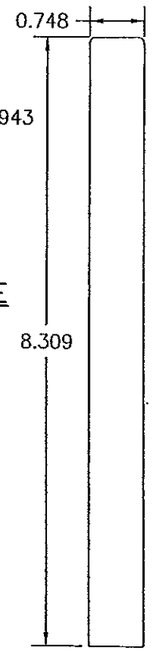


(48) POCKET COVER

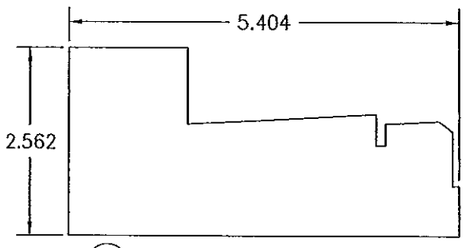


(49) SILL BASE EXTENSION (4 PANEL DEEP DOOR)

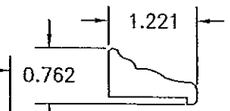


(50) NON-I.G. GLAZING BEAD

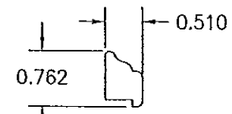


(51) I.G. GLAZING BEAD

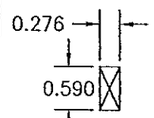


(52) SILL RAIL CLADDING BLOCK

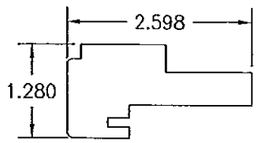


(53) ACTIVE INTERLOCK ASTRAGAL

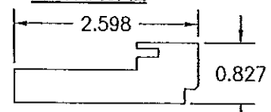


(54) ACTIVE INTERLOCK ASTRAGAL

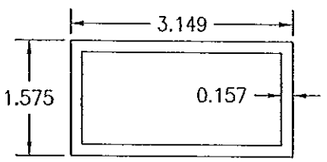


(55) SILL BASE (1 PANEL DEEP DOOR)

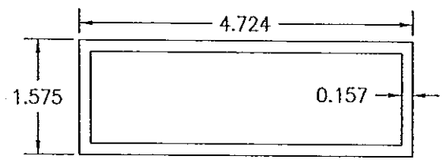


(56) SILL BASE (2 PANEL DEEP DOOR)

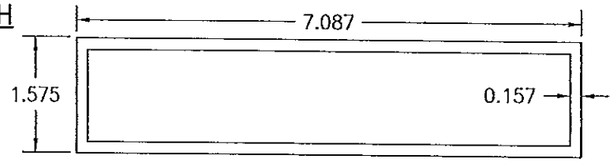


(57) SILL BASE (3 & 4 PANEL DEEP DOORS)

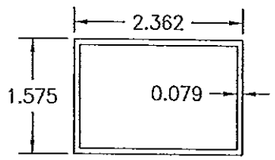


(58) SILL BASE EXTENSION (1 PANEL DEEP DOOR)

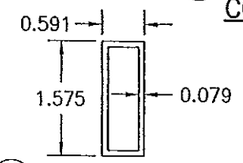


(59) EXTERIOR SILL BASE EXTENSION (2, 3 & 4 PANEL DEEP DOORS)

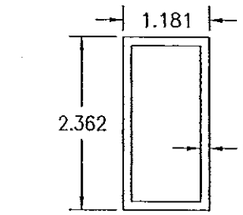


(60) INTERIOR SILL BASE EXTENSION (3 & 4 PANEL DEEP DOORS)

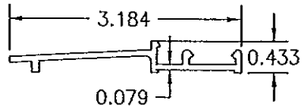


(62) THRESHOLD COVER (1 PANEL DEEP DOORS WITH POCKET)

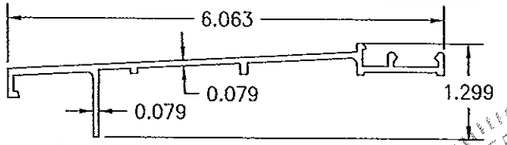


(61) THRESHOLD COVER (1 & 2 PANEL DEEP DOORS)

PRODUCT REVIEWED
as complying with the Florida
Building Code
Acceptance No. 14-0424.06
Expiration Date 11/24/15
By Ichung I. Chang
Miami-Dade Product Control

PRODUCT REVIEWED
as complying with the Florida
Building Code
Acceptance No. 13-0717.10
Expiration Date 11/24/15
By Ichung I. Chang
Miami-Dade Product Control

WARREN W. SCHAEFER LICENSE NO. 44135 STATE OF FLORIDA PROFESSIONAL ENGINEER

| NO. | REVISION DESCRIPTION | BY | DATE |
|---|---|---|---|
| | | | |

DRAWN BY: W.R.W. | CHECKED BY: W.W.S.
PLOT: 1=24 | DATE: 04/04/09

DRAWING TITLE
LIFT & SLIDE BRONZE CLAD SLIDING GLASS IMPACT DOORS

MANUFACTURER
PEETZ WINDOWS & DOORS
15951 S.W. 41ST STREET; SUITE 150
WESTON, FL 33331
954-659-3887

CONSULTANTS
W. W. SCHAEFER ENGINEERING & CONSULTING, P.A. (CA 6809)
7480 150TH COURT NORTH
PALM BEACH GARDENS, FL 33418
PHONE: 561-744-3424

CERTIFICATION
NOV 06 2013
WARREN W. SCHAEFER P.E.
P.E. NO. 44135

DRAWING NO. 1632 | REV. B
SHEET NO. 36 OF 38

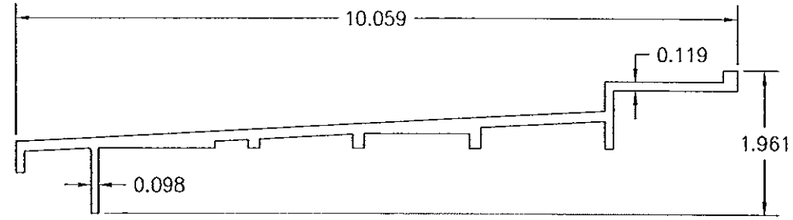


(63) THRESHOLD COVER (3 & 4 PANEL DEEP DOORS)

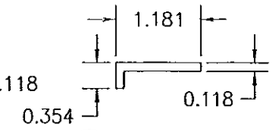


(64) GUIDING RAIL SUPPORT BRACKET




(65) GUIDING RAIL SUPPORT BRACKET

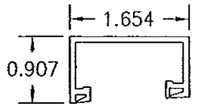


(66) SILL TRACK (FIXED PANEL)

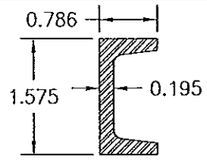


(67) STILE REINFORCEMENT

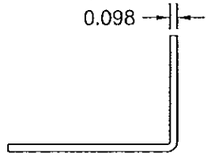


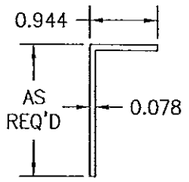


(120) POCKET INTERLOCK SKIN CLADDING

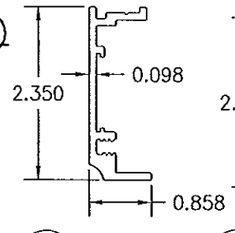


(112) FRAME CLADDING

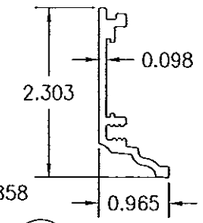


(113) ACTIVE TOP RAIL & BOTTOM RAIL EXTENSION CLADDING

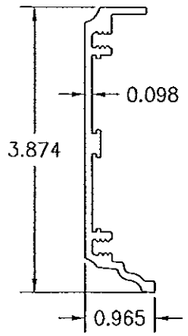


(114) FIXED TOP RAIL & STILE CLADDING

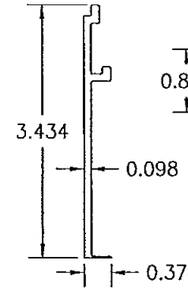


(115) BOTTOM RAIL CLADDING

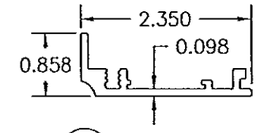


(116) POCKET CLADDING

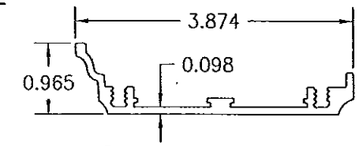


(117) POCKET STILE CLADDING

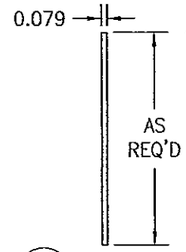


(118) JAMB SKIN CLADDING

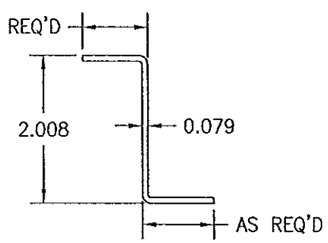


(119) HEAD SKIN CLADDING

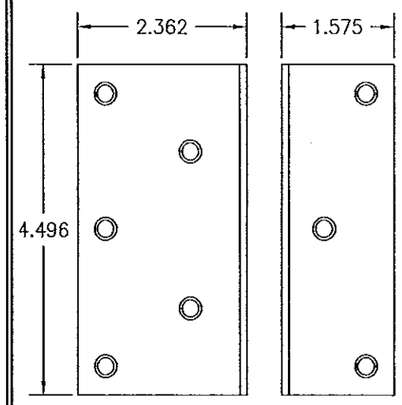


(68) MOUNTING CLIP

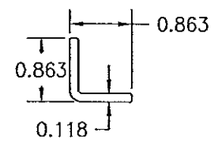


(121) CORNER STILE SKIN CLADDING

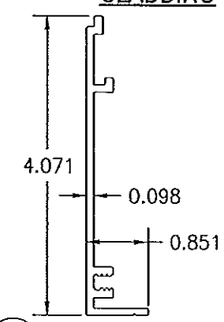


(122) BOTTOM RAIL CLADDING

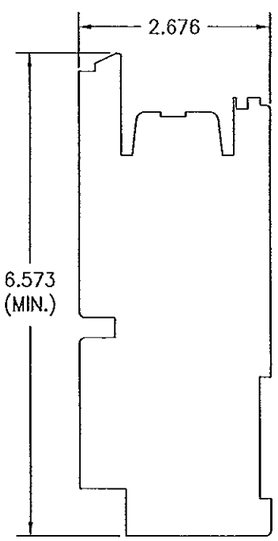


(69) CORNER STILE

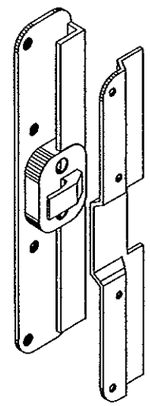

(84) INTERLOCK CLIP

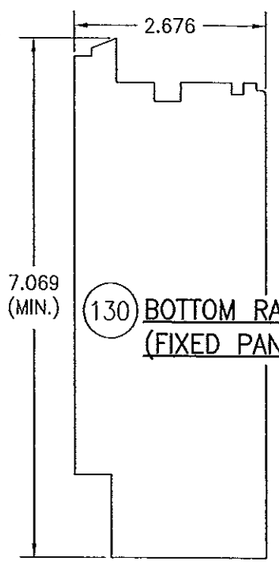


(130) BOTTOM RAIL (FIXED PANEL)

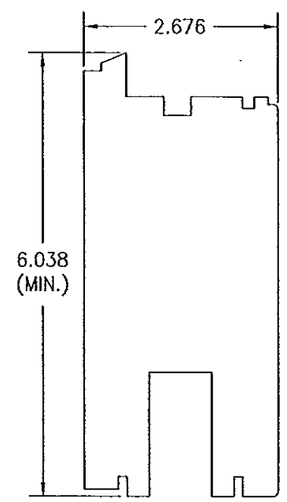


(131) BOTTOM RAIL (ACTIVE PANEL)

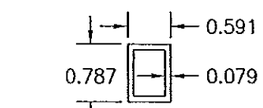


(138) INTERIOR AND EXTERIOR TUBE

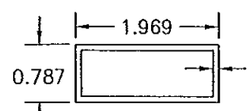


(139) INTERMEDIATE TUBE

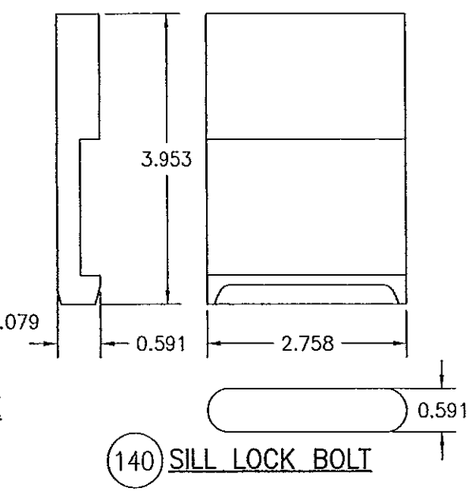


(140) SILL LOCK BOLT

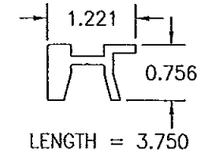


(141) SADDLE BASE

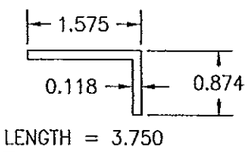


(144) SADDLE COVER

PRODUCT REVISED
as complying with the Florida
Building Code
Acceptance No. 14-0429.06
Expiration Date 11/24/15
By [signature]
Miami Dade Product Control

PRODUCT REVISED
as complying with the Florida
Building Code
Acceptance No. 13-0717.10
Expiration Date 11/24/15
By [signature]
Miami Dade Product Control

WARREN W. SCHAEFER LICENSE No. 44135 STATE OF FLORIDA PROFESSIONAL ENGINEER

| NO. | REVISION DESCRIPTION | BY | DATE |
|---|---|---|---|
| | | | |

DRAWN BY: W.R.W. | CHECKED BY: W.W.S.
PLOT: 1=24 | DATE: 04/04/09

DRAWING TITLE: LIFT & SLIDE BRONZE CLAD SLIDING GLASS IMPACT DOORS

MANUFACTURER: PEETZ WINDOWS & DOORS, 15951 S.W. 41ST STREET; SUITE 150, WESTON, FL 33331, 954-659-3887

CONSULTANTS: W. W. SCHAEFER ENGINEERING & CONSULTING, P.A. (CA 6809), 7480 150TH COURT NORTH, PALM BEACH GARDENS, FL 33418, PHONE: 561-744-3424

CERTIFICATION: NOV 06 2013
WARREN W. SCHAEFER, P.E. P.E. NO. 44135

DRAWING NO. 1632 | REV. B

SHEET NO. 37 OF 38

| ITEM # | ITEM DESCRIPTION | MANUFACTURER/NOTES |
|---|---|---|
| | WOOD & MISCELLANEOUS PARTS | |
| 1 | HEAD (1 PANEL DEEP DOOR) | MAHOGANY |
| 2 | HEAD (2 PANEL DEEP OX OR XO DOOR) | MAHOGANY |
| 3 | HEAD (2 PANEL DEEP XX DOOR) | MAHOGANY |
| 4 | HEAD (2 PANEL DEEP DOOR WITH POCKET) | MAHOGANY |
| 5 | HEAD (3 PANEL DEEP OXX DOOR) | MAHOGANY |
| 6 | HEAD (2 PANEL DEEP XXX DOOR) | MAHOGANY |
| 7 | HEAD (2 PANEL DEEP DOOR WITH POCKET) | MAHOGANY |
| 8 | HEAD (4 PANEL DEEP OXXX DOOR) | MAHOGANY |
| 9 | JAMB (1 PANEL DEEP DOOR) | MAHOGANY |
| 10 | JAMB/POCKET SIDE (1 & 2 PANEL DEEP DOOR) | MAHOGANY |
| 11 | JAMB/FIXED SIDE (2 PANEL DEEP OX OR XO DOOR) | MAHOGANY |
| 12 | JAMB/ACTIVE SIDE (2 PANEL DEEP OX OR XO DOOR) | MAHOGANY |
| 13 | JAMB (2 PANEL DEEP XX DOOR) | MAHOGANY |
| 14 | JAMB (2 PANEL DEEP XX DOOR WITH POCKET) | MAHOGANY |
| 15 | JAMB/FIXED SIDE (3 PANEL DEEP OXX DOOR) | MAHOGANY |
| 16 | JAMB/ACTIVE SIDE (3 PANEL DEEP OXX DOOR) | MAHOGANY |
| 17 | JAMB (3 PANEL DEEP XXX DOOR) | MAHOGANY |
| 18 | JAMB/ACTIVE SIDE (3 PANEL DEEP XXX DOOR WITH POCKET) | MAHOGANY |
| 19 | JAMB/POCKET SIDE (3 PANEL DEEP XXX DOOR WITH POCKET) | MAHOGANY |
| 20 | JAMB/FIXED SIDE (4 PANEL DEEP OXXX DOOR WITH POCKET) | MAHOGANY |
| 21 | JAMB/ACTIVE SIDE (4 PANEL DEEP OXXX DOOR WITH POCKET) | MAHOGANY |
| 22 | HEAD EXTENSION | MAHOGANY |
| 23 | HEAD FILLER BLOCK (EXTERIOR) | MAHOGANY |
| 24 | HEAD FILLER BLOCK (INTERMEDIATE) | MAHOGANY |
| 25 | TOP RAIL (ACTIVE PANEL) | MAHOGANY |
| 26 | TOP RAIL (FIXED PANEL) | MAHOGANY |
| 27 | BOTTOM RAIL (ACTIVE PANEL) | MAHOGANY |
| 28 | BOTTOM RAIL (FIXED PANEL) | MAHOGANY |
| 29 | STILE (ACTIVE PANEL) | MAHOGANY |
| 30 | MEETING STILE | MAHOGANY |
| 32 | STILE (FIXED PANEL) | MAHOGANY |
| 33 | INTERLOCK STILE | MAHOGANY |
| 34 | MIN. 1" THICK POCKET COVER (OVERALL SIZE PER POCKET REQUIREMENTS) | PLYWOOD |
| 35 | SILL BASE EXTENSION (1 PANEL DEEP WITH POCKET) | MAHOGANY |
| 36 | LOCKING BOLT BLOCK | MAHOGANY |
| 37 | POCKET COVER | MAHOGANY |
| 38 | POCKET COVER SUPPORT BLOCK | MAHOGANY |
| 39 | POCKET STILE EXTENSION | MAHOGANY |
| 40 | ACTIVE INTERLOCK ASTRAGAL | MAHOGANY |
| 41 | FIXED INTERLOCK ASTRAGAL | MAHOGANY |
| 42 | CONTINUOUS KEY | MAHOGANY |
| 43 | FIXED SILL BLOCKING | MAHOGANY |
| 44 | TRACK BRIDGING | MAHOGANY |
| 45 | SILL BASE EXTENSION (2 PANEL DEEP DOOR WITH POCKET) | MAHOGANY |
| 46 | SILL BASE EXTENSION (3 PANEL DEEP DOOR WITH POCKET) | MAHOGANY |
| 47 | DECORATIVE CAP | MAHOGANY |
| 48 | POCKET COVER | MAHOGANY |
| 49 | SILL BASE EXTENSION (4 PANEL DEEP DOOR) | MAHOGANY |
| 50 | NON-I.G. GLAZING BEAD | MAHOGANY |
| 51 | I.G. GLAZING BEAD | MAHOGANY |
| 52 | SILL RAIL CLADDING BLOCK | MAHOGANY |
| 53 | ACTIVE INTERLOCK ASTRAGAL | MAHOGANY |
| 54 | ACTIVE INTERLOCK ASTRAGAL | MAHOGANY |
| 55 | SILL BASE (1 PANEL DEEP DOOR) | 6063-T5 ALUMINUM |
| 56 | SILL BASE (2 PANEL DEEP DOOR) | 6063-T5 ALUMINUM |
| 57 | SILL BASE (3 & 4 PANEL DEEP DOORS) | 6063-T5 ALUMINUM |

| ITEM # | ITEM DESCRIPTION | MANUFACTURER/NOTES |
|---|---|---|
| | WOOD & MISCELLANEOUS PARTS | |
| 58 | SILL BASE EXTENSION (1 PANEL DEEP DOOR) | 6063-T5 ALUMINUM |
| 59 | EXTERIOR SILL BASE EXTENSION (2, 3 & 4 PANEL DEEP DOORS) | 6063-T5 ALUMINUM |
| 60 | INTERIOR SILL BASE EXTENSION (3 & 4 PANEL DEEP DOORS) | 6063-T5 ALUMINUM |
| 61 | THRESHOLD COVER (1 & 2 PANEL DEEP DOORS) | BRONZE OR 6063-T5 ALUMINUM |
| 62 | THRESHOLD COVER (1 PANEL DEEP DOORS WITH POCKET) | BRONZE OR 6063-T5 ALUMINUM |
| 63 | THRESHOLD COVER (3 & 4 PANEL DEEP DOORS) | BRONZE OR 6063-T5 ALUMINUM |
| 64 | GUIDING RAIL SUPPORT BRACKET | 6063-T5 ALUMINUM |
| 65 | GUIDING RAIL SUPPORT BRACKET | 6063-T5 ALUMINUM |
| 66 | SILL TRACK (FIXED PANEL) | PVC |
| 67 | STILE REINFORCEMENT | GALVANIZED 34 KSI STEEL |
| 68 | MOUNTING CLIP | GALVANIZED 34 KSI STEEL |
| 69 | CORNER STILE | MAHOGANY |
| | HARDWARE | |
| 70 | BRASS ROLLER TRACK COVER | OTTO FUCHS #608410 (USE WITH ITEM #78) |
| 71 | BRASS ROLLER TRACK | OTTO FUCHS #608409 |
| 72 | ALUMINUM ROLLER TRACK | SUPPLIED WITH GU OR FFI HARDWARE |
| 73 | ALUMINUM ROLLER TRACK | SUPPLIED WITH GU OR FFI HARDWARE |
| 74 | ALUMINUM ROLLER TRACK | SUPPLIED WITH GU OR FFI HARDWARE |
| 75 | 2" LONG ROLLER TRACK CONNECTOR | WITHIN 3" OF ENDS & MAX. 12" O.C. |
| 76 | MALE GUIDING RAIL | GU #740 |
| 77 | INTERMEDIATE GUIDING RAIL | GU #741 |
| 78 | LIFT AND SLIDE DOOR HARDWARE | FFI #255JH OR GU #934 |
| 79 | LIFT AND SLIDE DOOR HARDWARE | HAUTAU HS-300-E OR HS-300 |
| 80 | HANDLE/GRIP PULL | AS REQUIRED TO OPERATE LOCK/LIFT SLIDE SYSTEM |
| 81 | BUMPER | GU, FFI OR HAUTAU |
| 82 | STOPPER | GU, FFI OR HAUTAU |
| 83 | LOCKING BOLT | GU OR FFI #LAR 2500012 OR HAUTAU #184695 |
| 84 | INTERLOCK CLIP | GU OR FFI #K-16606-00-01 SECURED TO EACH STILE WITH 2 NO. 14 X 1 3/8" WOOD SCREWS |
| | SEALS & SEALANTS | |
| 86 | SEALING BRIDGE | PEETZ (SCREWED TO FRAME W/#6X7/8 SMS) |
| 87 | RUBBER SEALING BRIDGE BY GUMMI BUSH | (GLUED ONTO INTERLOCK ASTRAGAL WITH CRAZY GLUE) |
| 88 | SASH GASKET | SUPPLIED WITH GU OR FFI |
| 89 | SASH GASKET | LOCKING HARDWARE PACKAGE |
| 90 | SOFT RUBBER SEALING BRIDGE | GU/FFI (SCREWED TO FRAME W/#6X7/8 SMS) |
| 91 | SOFT RUBBER SEALING BRIDGE | GU/FFI (SCREWED TO FRAME W/#6X7/8 SMS) |
| 92 | SOFT RUBBER SEALING PIECE | GU/FFI (GLUED ONTO RUNNING RAIL) |
| 93 | SOFT RUBBER SEALING PIECE | GU/FFI (GLUED ONTO RUNNING RAIL) |
| 94 | 3/8" X 3/16" PRECOMPRESSED TAPE | AS REQ'D |
| 95 | SASH GASKET | SCHLEGAL #QL3011 |
| | FASTENERS | |
| 96 | NO. 8 X 1 3/4" WOOD SCREW | WITHIN 6" OF ENDS & 24" MAX. O.C. |
| 97 | NO. 8 X 1 3/8" S.S. WOOD SCREW | WITHIN 4" OF CORNERS & 12" MAX. O.C. |
| 98 | NO. 8 X 1 3/8" S.S. WOOD SCREW | WITHIN 2" OF CORNERS & 8" MAX. O.C. |
| 99 | NO. 8 X 2" S.S. SMS SCREW | WITHIN 4" OF CORNERS & 12" MAX. O.C. |
| 100 | NO. 12 X 2 3/4" S.S. WOOD SCREW | WITHIN 4" OF CORNERS & 6" MAX. O.C. |
| 101 | NO. 12 S.S. SMS SCREW (LENGTH AS REQ'D TO PENETRATE ALUMINUM SILL BASE) | WITHIN 4" OF CORNERS & 6" MAX. O.C. |
| 102 | NO. 8 X 1 3/4" S.S. SCREW | WITHIN 6" OF CORNERS & 17" MAX. O.C. |
| 103 | NO. 14 X 3 3/4" WOOD SCREW | WITHIN 4" OF CORNERS & 14" MAX. O.C. |
| 104 | NO. 14 X 5" WOOD SCREW | WITHIN 4" OF CORNERS & 14" MAX. O.C. |
| 105 | NO. 14 X 4 3/4" WOOD SCREW | WITHIN 5 1/2" OF CORNERS & 10" MAX. O.C. |
| 106 | 18 GA. X 1 1/4" GALV. CURVED NAIL | WITHIN 10" OF CORNERS & 20" MAX. O.C. |
| 107 | NO. 6 X 5/8" WOOD SCREW | WITHIN 4 OF CORNERS & 20" MAX. O.C. |
| 108 | NO. 12 X 7/8" SELF TAPPING SCREW | WITHIN 4 OF CORNERS & 14" MAX. O.C. |
| 109 | 3/16" X 1 9/16 SELF TAP/DRILLING SCREW | 2 PER TRACK CONNECTOR |
| 110 | NO. 8 X 2 3/4" S.S. SMS SCREW | WITHIN 4" OF CORNERS & 12" MAX. O.C. |
| 111 | m4 X 1 3/8" MACHINE SCREW & NUT | WITHIN 4" OF CORNERS & 12" MAX. O.C. |

| ITEM # | ITEM DESCRIPTION | MANUFACTURER/NOTES |
|---|---|---|
| | CLAD PARTS | |
| 112 | SILL BASE (1 PANEL DEEP DOOR) | BRONZE OR 6063-T5 ALUMINUM |
| 113 | SILL BASE (2 PANEL DEEP DOOR) | BRONZE OR 6063-T5 ALUMINUM |
| 114 | SILL BASE (3 & 4 PANEL DEEP DOORS) | BRONZE OR 6063-T5 ALUMINUM |
| 115 | SILL BASE EXTENSION (1 PANEL DEEP DOOR) | BRONZE OR 6063-T5 ALUMINUM |
| 116 | SILL BASE (1 PANEL DEEP DOOR) | BRONZE OR 6063-T5 ALUMINUM |
| 117 | SILL BASE (2 PANEL DEEP DOOR) | BRONZE OR 6063-T5 ALUMINUM |
| 118 | SILL BASE (3 & 4 PANEL DEEP DOORS) | BRONZE OR 6063-T5 ALUMINUM |
| 119 | SILL BASE EXTENSION (1 PANEL DEEP DOOR) | BRONZE OR 6063-T5 ALUMINUM |
| 120 | SILL BASE EXTENSION (1 PANEL DEEP DOOR) | BRONZE OR 6063-T5 ALUMINUM |
| 121 | CORNER STILE SKIN CLADDING | BRONZE OR 6063-T5 ALUMINUM |
| 122 | BOTTOM RAIL CLADDING | BRONZE OR 6063-T5 ALUMINUM |
| | ALTERNATE FLUSH MOUNT SILL PARTS | |
| 130 | BOTTOM RAIL (FIXED PANEL) | MAHOGANY |
| 131 | BOTTOM RAIL (ACTIVE PANEL) | MAHOGANY |
| 136 | 0.09375" THICK PLATE | 6060-T66 ALUMINUM |
| 138 | INTERIOR AND EXTERIOR TUBE | 6060-T66 ALUMINUM |
| 139 | INTERMEDIATE TUBE | 6060-T66 ALUMINUM |
| 140 | SILL LOCK BOLT (2 PER ACTIVE PANEL) | 6060-T66 ALUMINUM |
| 141 | SADDLE BASE (SCREWED TO SILL WITH 1 m5 X 30 mm SCREW) | BRONZE |
| 144 | SADDLE COVER (AFFIXED TO ITEM #131 WITH SIKASIL 184 N-PLUS SILICONE SEALANT BY SIKA | BRONZE |
| | ALTERNATE FLUSH MOUNT SILL FASTENERS | |
| 150 | m5 X 15 SCREWS | WITHIN 2" OF ENDS & 12" MAX. O.C. |
| 151 | NO. 12 X 4" S.S. SMS SCREW | WITHIN 4" OF CORNERS & 6" MAX. O.C. |

NOTE: WOOD USED IN TESTING WAS MAHOGANY WITH A SPECIFIC GRAVITY OF G = 0.46 AND A MODULUS OF ELASTICITY OF E = 1,500,000 PSI. OTHER WOOD SPECIES APPLICABLE FOR USE WITH THIS PRODUCT ARE THOSE WITH A SPECIFIC GRAVITY OF 0.46 AND MODULUS OF ELASTICITY OF 1,500,000 PSI OR GREATER. ALL WOOD IS MINIMUM GRADE 2 MILLED BY PEETZ WINDOWS & DOORS TO SELECT.

PRODUCT REVISED
as complying with the Florida
Building Code
Acceptance No. 13-0717.10
Expiration Date Nov 24, 2015
By Shaq I. Chand
Miami Dade Product Control

PRODUCT REVISED
as complying with the Florida
Buiding Code
Acceptance No. 14-0429.06
Expiration Date Nov 24, 2015
By Shaq I. Chand
Miami Dade Product Control

WARREN W. SCHAEFER * LICENSE No 44135 * STATE OF FLORIDA * PROFESSIONAL ENGINEER

| DRAWN BY: W.R.W. | CHECKED BY: W.W.S. |
|---|---|
| PLOT: 1=24 | DATE: 04/04/09 |

| NO. | REVISION DESCRIPTION | BY | DATE |
|---|---|---|---|
| | | | |

DRAWING TITLE
LIFT & SLIDE BRONZE CLAD SLIDING GLASS IMPACT DOORS

MANUFACTURER
PEETZ WINDOWS & DOORS
15951 S.W. 41ST STREET; SUITE 150
WESTON, FL 33331
954-659-3887

CONSULTANTS
W. W. SCHAEFER ENGINEERING & CONSULTING, P.A. (CA 6809)
7480 150TH COURT NORTH
PALM BEACH GARDENS, FL 33418
PHONE: 561-744-3424

CERTIFICATION
NOV 06 2013
WARREN W. SCHAEFER, P.E.
P.E. NO. 44135

DRAWING NO. 1632
REV. B
SHEET NO. 38 OF 38