MIAMI-DADE COUNTY
DEPARTMENT OF REGULATORY AND ECONOMIC RESOURCES (RER)
BOARD AND CODE ADMINISTRATION DIVISION

MIAMI-DADE COUNTY
PRODUCT CONTROL SECTION
11805 SW 26 Street, Room 208
T (786) 315-2590 F (786) 315-2599
www.miamidade.gov/economy

# NOTICE OF ACCEPTANCE (NOA)

**Peetz Windows and Doors, Inc.**
**15951 SW 41 Street, Suite 150**
**Weston, FL 33331**

**SCOPE:**

This NOA is being issued under the applicable rules and regulations governing the use of construction materials. The documentation submitted has been reviewed and accepted by Miami-Dade County RER - Product Control Section to be used in Miami Dade County and other areas where allowed by the Authority Having Jurisdiction (AHJ).

This NOA shall not be valid after the expiration date stated below. The Miami-Dade County Product Control Section (In Miami Dade County) and/or the AHJ (in areas other than Miami Dade County) reserve the right to have this product or material tested for quality assurance purposes. If this product or material fails to perform in the accepted manner, the manufacturer will incur the expense of such testing and the AHJ may immediately revoke, modify, or suspend the use of such product or material within their jurisdiction. RER reserves the right to revoke this acceptance, if it is determined by Miami-Dade County Product Control Section that this product or material fails to meet the requirements of the applicable building code.

This product is approved as described herein, and has been designed to comply with the Florida Building Code, including the High Velocity Hurricane Zone.

**DESCRIPTION: Series "American" Inswing Wood Casement Window - L.M.I.**

**APPROVAL DOCUMENT:** Drawing No. **1320A**, titled "American In-Swing Casement Impact Wood Windows", sheets 1 through 10 of 10, dated 03/18/05, with revision **B1** dated 10/19/11, prepared by W. W. Schaefer Engineering & Consulting, P.A., signed and sealed by Warren W. Schaefer, P.E., bearing the Miami–Dade County Product Control Revision stamp with the Notice of Acceptance number and expiration date by the Miami-Dade County Product Control Section.

**MISSILE IMPACT RATING: Large and Small Missile Impact Resistant.**

**LABELING:** Each unit shall bear a permanent label with the manufacturer's name or logo, city, state, model/series, and following statement: "Miami-Dade County Product Control Approved", unless otherwise noted herein.

**RENEWAL** of this NOA shall be considered after a renewal application has been filed and there has been no change in the applicable building code negatively affecting the performance of this product.

**TERMINATION** of this NOA will occur after the expiration date or if there has been a revision or change in the materials, use, and/or manufacture of the product or process. Misuse of this NOA as an endorsement of any product, for sales, advertising or any other purposes shall automatically terminate this NOA. Failure to comply with any section of this NOA shall be cause for termination and removal of NOA.

**ADVERTISEMENT:** The NOA number preceded by the words Miami-Dade County, Florida, and followed by the expiration date may be displayed in advertising literature. If any portion of the NOA is displayed, then it shall be done in its entirety.

**INSPECTION:** A copy of this entire NOA shall be provided to the user by the manufacturer or its distributors and shall be available for inspection at the job site at the request of the Building Official.

This NOA **revises NOA# 11-1024.12** and consists of this page 1 and evidence pages E-1 and E-2, as well as approval document mentioned above.

The submitted documentation was reviewed by **Manuel Perez, P.E.**

MIAMI-DADE COUNTY APPROVED

7/16/14

**NOA No. 14-0429.12**
**Expiration Date: August 18, 2015**
**Approval Date: July 24, 2014**

**Peetz Windows and Doors, Inc.**

## NOTICE OF ACCEPTANCE: EVIDENCE SUBMITTED

**A. DRAWINGS**

1. Manufacturer's die drawings and sections.
2. Drawing No. **1320A**, titled "American In-Swing Casement Impact Wood Windows", sheets 1 through 10 of 10, dated 03/18/05, with revision **B1** dated 10/19/11, prepared by W. W. Schaefer Engineering & Consulting, P.A., signed and sealed by Warren W. Schaefer, P.E.
   ***(Submitted under previous NOA No. 11-1024.12)***

**B. TESTS**

1. Test reports on: 1) Air Infiltration Test, per FBC, TAS 202–94
   2) Uniform Static Air Pressure Test, Loading per FBC, TAS 202–94
   3) Water Resistance Test, per FBC, TAS 202–94
   4) Large Missile Impact Test per FBC, TAS 201–94
   5) Cyclic Wind Pressure Loading per FBC, TAS 203–94
   6) Forced Entry Test, per FBC 2411.3.2.1, and TAS 202–94

   along with the manufacturer's parts drawings, marked–up drawings and installation diagram of outswing & inswing wood casement windows, prepared by Hurricane Test Laboratory, LLC, Test Reports No. **HTL-0284-1018-04**, **HTL-0284-0115-05** and **HTL-0284-0116-05**, dated 06/03/05, all signed and sealed by Vinu J. Abraham, P.E.
   ***(Submitted under NOA No. 05-0622.07)***

**C. CALCULATIONS**

1. Anchor verification calculations and structural analysis, complying with FBC-2007, dated 04/12/05, revised on 04/29/10 and updated on 10/19/11, prepared by W. W. Schaefer Engineering & Consulting, P.A., signed and sealed by Warren W. Schaefer, P.E.
   ***(Submitted under previous NOA No. 11-1024.12)***
2. Glazing complies with **ASTM E1300-04.**

**D. QUALITY ASSURANCE**

1. Miami-Dade Department of Regulatory and Economic Resources (RER)

Manuel Perez, P.E.
Product Control Examiner
NOA No. 14-0429.12
Expiration Date: August 18, 2015
Approval Date: July 24, 2014

## NOTICE OF ACCEPTANCE: EVIDENCE SUBMITTED

### E. MATERIAL CERTIFICATIONS

1. Notice of Acceptance No. **12–1231.10** issued to **Eastman Chemical Company (MA)** for their "**Saflex Clear and Color Glass Interlayers**" dated 03/28/13, expiring on 05/21/16.
2. Notice of Acceptance No. **12–1231.08** issued to **Eastman Chemical Company (MA)** for their "**Saflex CP – Saflex and Saflex HP Composite Glass Interlayers with PET Core**" dated 03/28/13, expiring on 12/11/18.

### F. STATEMENTS

1. Statement letter of conformance, complying with **FBC -2010** and **FBC - 5th Edition (2014)**, dated 04/10/14, prepared by W. W. Schaefer Engineering & Consulting, P.A., signed and sealed by Warren W. Schaefer, P.E.
2. Statement letter of conformance, complying with the FBC-2007, and of no financial interest, dated 04/29/10, prepared by W. W. Schaefer Engineering & Consulting, P.A., signed and sealed by Warren W. Schaefer, P.E.
   ***(Submitted under NOA No. 10-0510.08)***
3. Laboratory compliance letters for Test Reports No. **HTL-0284-1018-04**, **HTL-0284-0115-05** and **HTL-0284-0116-05**, issued by Hurricane Test Laboratory, LLC, dated 06/03/05, all signed and sealed by Vinu J. Abraham, P.E.
   ***(Submitted under previous NOA No. 05–0622.07)***

### G. OTHERS

1. Notice of Acceptance No. **11-1024.12** issued to Peetz Windows and Doors, Inc. for their Series "American" Inswing Wood Casement Window - L.M.I.", approved on 12/29/11 and expiring on 08/18/15.

Manuel Perez

**Manuel Perez, P.E.**
**Product Control Examiner**
**NOA No. 14-0429.12**
**Expiration Date: August 18, 2015**
**Approval Date: July 24, 2014**

## GENERAL NOTES:

1. THESE WINDOW SYSTEMS HAVE BEEN TESTED, ANALYZED & APPROVED FOR DESIGN PRESSURES NOT TO EXCEED THOSE SHOWN IN THE "ALLOWABLE DESIGN PRESSURE TABLE(S).
2. OPENINGS, BUCKING & BUCKING FASTENERS MUST BE PROPERLY DESIGNED & INSTALLED TO TRANSFER WIND LOADS TO THE STRUCTURE.
3. ALL HARDWARE & FASTENERS SHALL BE IN ACCORDANCE WITH THESE DRAWINGS & SHALL NOT VARY UNLESS SPECIFICALLY MENTIONED ON THE DRAWINGS. SPECIFIED ANCHOR EMBED TO BASE MATERIAL SHALL BE BEYOND WALL FINISH OR STUCCO.
4. THE DETAILS & SPECIFICATIONS SHOWN HEREIN REPRESENT THE PRODUCTS TESTED & PROPOSED FOR WATER, AIR, IMPACT, CYCLIC & UNIFORM STATIC AIR PRESSURE TESTING IN CONFORMANCE WITH THE FLORIDA BUILDING CODE PROTOCALS TAS-201, 202 & 203 FOR LARGE MISSILE IMPACT WINDOWS.
5. THESE WINDOW SYSTEMS HAVE BEEN DESIGNED IN ACCORDANCE WITH AND MEET THE REQUIREMENTS OF THE FLORIDA BUILDING CODE (FBC) INCLUDING HIGH VELOCITY HURRICANE ZONES (HVHZ).
6. IMPACT SHUTTERS ARE NOT REQUIRED WITH THESE WINDOWS.
7. ALL ANCHORS SECURING WINDOW FRAME TO PRESSURE TREATED BUCKS OR WOOD FRAMING SHALL BE CAPABLE OF RESISTING CORROSION CAUSED BY THE PRESSURE TREATING CHEMICALS IN THE WOOD.
8. DETERMINE THE POSITIVE & NEGATIVE DESIGN LOADS TO USE WHEN REFERENCING THESE DOCUMENTS IN ACCORDANCE WITH THE GOVERNING CODE AND GOVERNING WIND VELOCITY. FOR WIND LOAD CALCULATIONS IN ACCORDANCE WITH THE FLORIDA BUILDING CODE, A DIRECTIONALITY FACTOR OF KD = 0.85 MAY BE APPLIED PER THE ASCE-7 STANDARD.
9. NO INCREASE IN ALLOWABLE STRESS HAS BEEN USED IN THE CERTIFICATION OF THIS PRODUCT. WIND LOAD DURATION FACTOR "CD" = 1.6 WAS USED FOR WOOD SCREW ANALYSIS ONLY.
10. MATERIALS, INCLUDING BUT NOT LIMITED TO STEEL SCREWS, THAT COME INTO CONTACT WITH OTHER DISSIMILAR MATERIALS SHALL MEET THE REQUIREMENTS OF FLORIDA BUILDING CODE CHAPTER 20.
11. ALL WOOD MEMBERS OF WINDOWS THAT MAY POSSIBLY COME INTO CONTACT WITH MASONRY OR CONCRETE SUBSTRATES, ARE SUBJECT TO MOISTURE &/OR ARE SUBJECT TO THE OUTSIDE ENVIRONMENT SHALL BE OF AN APPROVED DURABLE SPECIES OR BE TREATED IN AN APPROVED METHOD WITH AN APPROVED PRESERVATIVE PER FBC SECTION 2326.

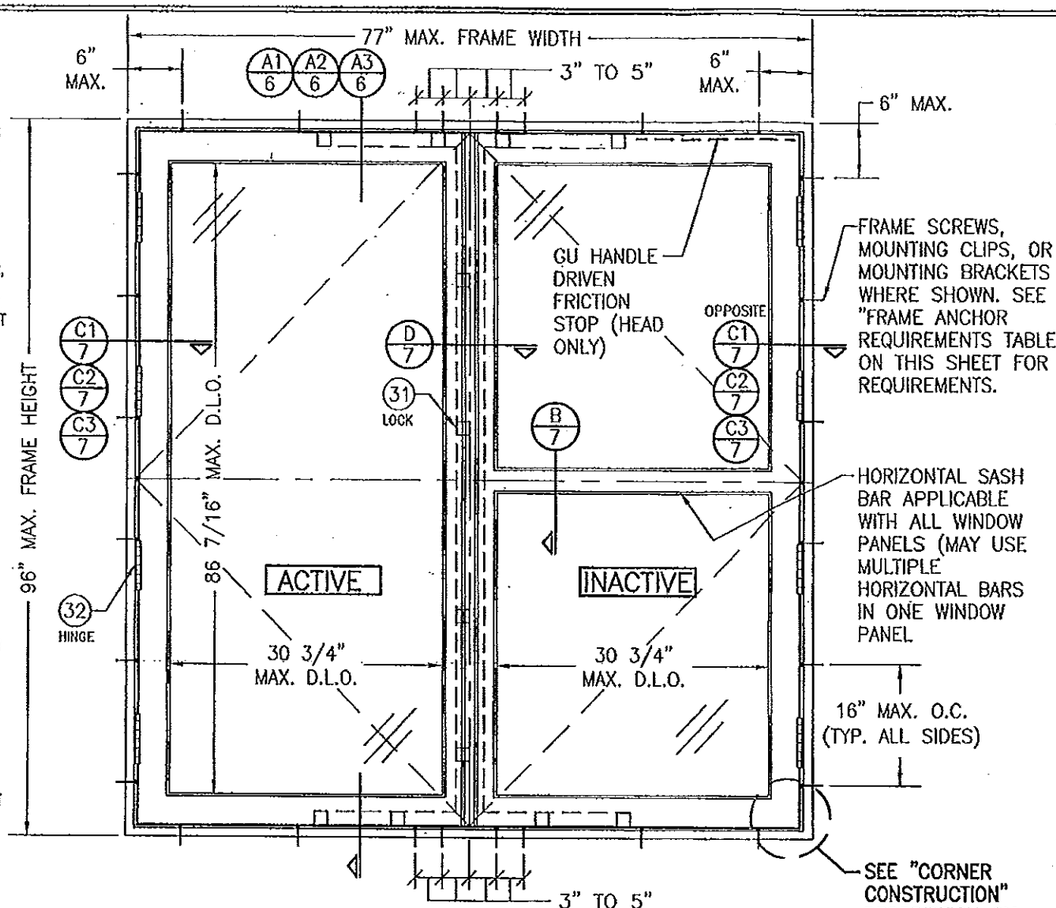


### INTERIOR ELEVATION
### DOUBLE RECTANGULAR HINGED WINDOW UNIT
(FOR TILT-TURN CONDITION, SEE ELEVATION ON SHEET 5)
SCALE: N.T.S.

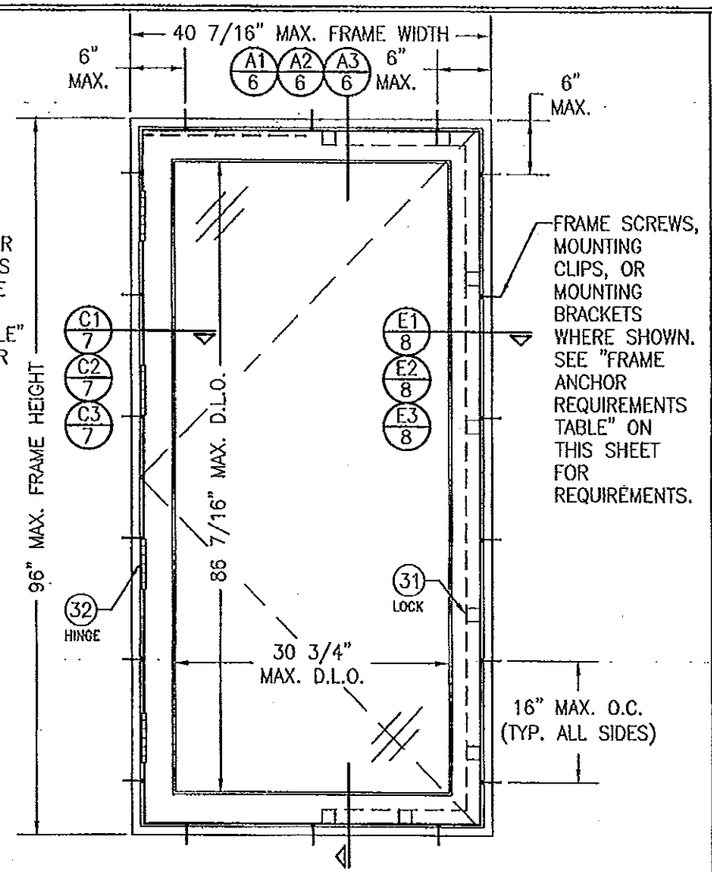


### INTERIOR ELEVATION
### SINGLE RECTANGULAR HINGED WINDOW UNIT
(FOR TILT-TURN CONDITION, SEE ELEVATION ON SHEET 5)
SCALE: N.T.S.

| ALLOWABLE DESIGN PRESSURE (SINGLE, DOUBLE & TRANSOM MULLED WINDOWS) |
|---|
| +/- 70 PSF |
| FOR VERTICAL MULLION ALLOWABLE PRESSURE, SEE MULLION LOAD TABLE ON SHEET 4 |

### FRAME ANCHOR REQUIREMENTS TABLE

| OPENING TYPE (SUBSTRATE) | FRAME/CLIP/BRACKET TO OPENING FASTENER TYPE | MINIMUM EMBED | MINIMUM EDGE DIST. |
|---|---|---|---|
| **FRAME SCREWS** | | | |
| MIN. 2X4 WOOD FRAME OR BUCK (MIN. GR. 3 & G=0.55) | NO. 14 SMS OR WOOD SCREW | 1 1/4" | 3/4" |
| MIN. 18 GA. 33 KSI METAL STUD | NO. 14 GR. 5 SELF TAP/DRILL SCREW | FULL | 1/2" |
| MIN. 1/8" THK A36 STEEL | NO. 14 GR. 5 SELF TAP/DRILL SCREW | FULL | 1/2" |
| MIN. C-90 CMU OR 2500 PSI CONCRETE | (1) 1/4" CONCRETE SCREW | 1 1/4" | 2" |
| **MOUNTING CLIP SCREWS** | | | |
| MIN. 2X4 WOOD FRAME OR BUCK (MIN. GR. 3 & G=0.55) | NO. 8 SMS OR WOOD SCREW | 1 3/8" | 1/2" |
| MIN. 1/8" THK A36 STEEL | NO. 8 GR. 5 SELF TAP/DRILL SCREW | FULL | 1/2" |
| **MOUNTING BRACKET SCREWS** | | | |
| MIN. 2X6 WOOD FRAME OR BUCK (MIN. GR. 3 & G=0.55) | NO. 8 SMS OR WOOD SCREW | 1 3/8" | 1/2" |
| MIN. 18 GA. 33 KSI METAL STUD | NO. 8 GR. 5 SELF TAP/DRILL SCREW | FULL | 1/2" |
| MIN. 1/8" THK A36 STEEL | NO. 8 GR. 5 SELF TAP/DRILL SCREW | FULL | 1/2" |

(1) CONCRETE SCREWS SHALL BE ELCO ULTRACONS, ELCO CRETE-FLEX, ITW RAMSET/RED HEAD TAPCONS OR HILTI KWIK-CON II (HARDENED STEEL OR S.S.).

### APPROVED SHAPES

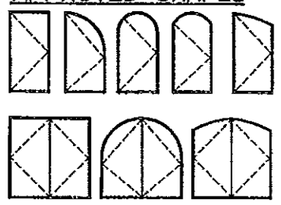

NOTES:
1. OTHER SHAPES MAY APPLY PROVIDING THEY ARE SIMILAR TO THOSE SHOWN & HAVE CORNER CONSTRUCTION AS DESCRIBED ON THIS SHEET.
2. ALL SHAPED UNITS MUST FIT INSCRIBED INTO THE ALLOWABLE RECTANGULAR UNITS & BE GOVERNED BY THE ALLOWABLE PRESSURE OF THE RESPECTIVE RECTANGULAR UNIT.

### CORNER CONSTRUCTION:

JAMBS: COPED, BUTTED TOGETHER, JOINED WITH 3 NO. 10 X 3 1/8" SCREWS & GLUED WITH BINDAN D4 OR EQUAL.

SASH: MULTI-FORKED, BUTTED & GLUED WITH BINDAN D4 OR EQUAL.

THESE DRAWINGS ARE APPLICABLE ONLY TO THE PRODUCT SPECIFIED. THEY MAY NOT BE USED FOR THE ASSEMBLY AND/OR INSTALLATION OF ANY OTHER PRODUCT NOR MAY THEY BE USED FOR RATIONAL AND/OR LOCAL APPROVAL OF ANY PRODUCT NOT PRODUCED BY THE MANUFACTURER STATED ON THESE DRAWINGS.

PRODUCT REVISED
as complying with the Florida Building Code
Acceptance No 14-0429.12
Expiration Date Aug 18, 2015
By Miami Dade Product Control

PRODUCT REVISED
as complying with the Florida Building Code
Acceptance No 11-1024.12
Expiration Date 08/18/2015
By Miami Dade Product Control

WARREN W. SCHAEFER * ENGINEER * LICENSE No. 44135 * STATE OF FLORIDA * PROFESSIONAL ENGINEER

| NO. | REVISION DESCRIPTION | BY | DATE |
|---|---|---|---|
| A1 | UPDATE TO PRESENT STANDARDS | WRM | 05/06/10 |
| B1 | CHANGE CONSULTANTS ADDRESS | WRM | 10/19/11 |

DRAWN BY: S.T.R. | CHECKED BY: W.W.S.
PLOT: 1=16 | DATE: 3/18/05

DRAWING TITLE: AMERICAN IN-SWING CASEMENT IMPACT WOOD WINDOWS

MANUFACTURER: PEETZ WINDOWS & DOORS
15951 S.W. 41ST STREET; SUITE 150
WESTON, FL 33331
954-659-3887

CONSULTANTS: W. W. SCHAEFER ENGINEERING & CONSULTING, P.A. (CA 6809)
7480 150TH COURT NORTH
PALM BEACH GARDENS, FL 33418
PHONE: 561-744-3424

CERTIFICATION: OCT 19 2011
WARREN W. SCHAEFER P.E.
P.E. NO. 44135

DRAWING NO. 1320A | REV. B
SHEET NO. 1 OF 10

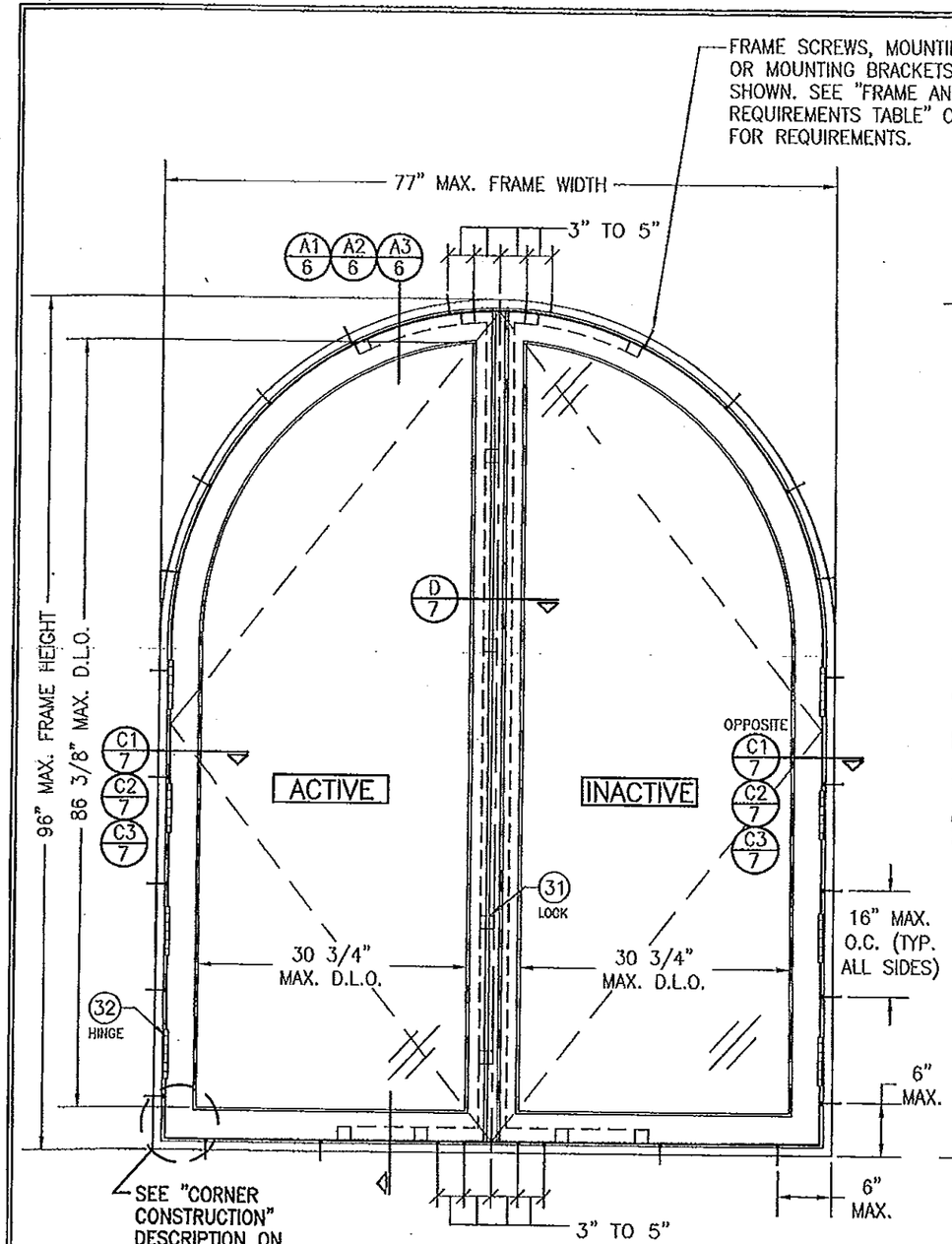


INTERIOR ELEVATION
DOUBLE HALF ROUND HINGED WINDOW UNIT
(FOR TILT-TURN CONDITION, SEE ELEVATION ON SHEET 5)
SCALE: 3/4" = 1'-0"
(OTHER SHAPES APPLY. SEE SHAPES TABLE ON SHEET 1)

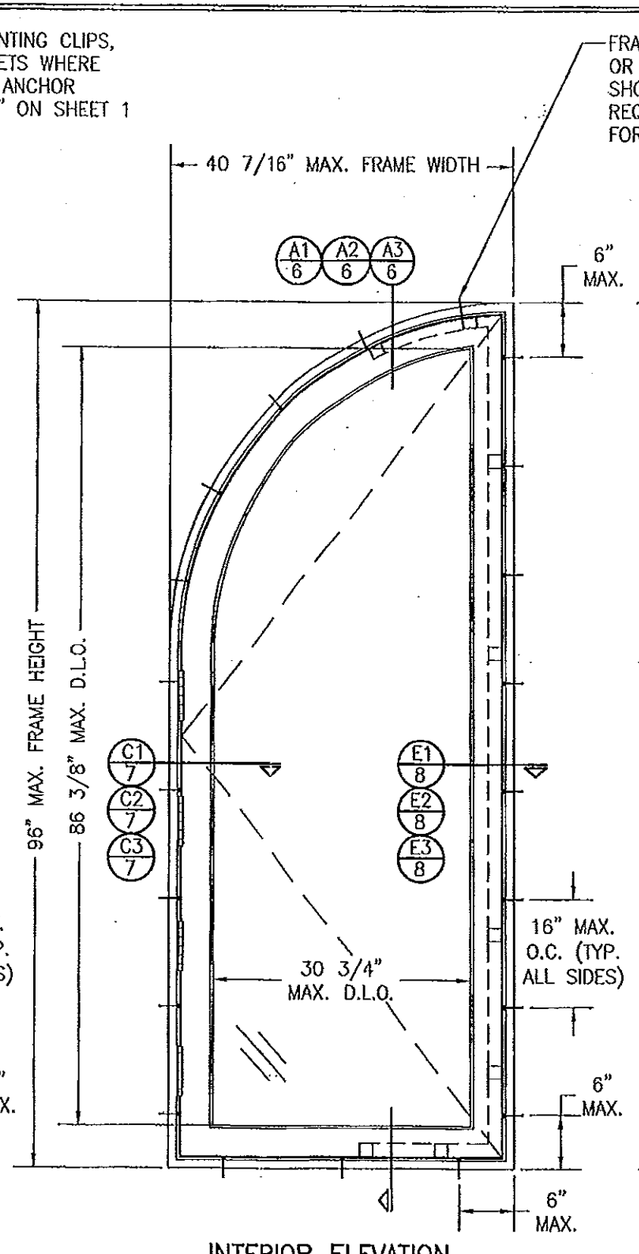


INTERIOR ELEVATION
SINGLE QUARTER ROUND HINGED WINDOW UNIT
(FOR TILT-TURN CONDITION, SEE ELEVATION ON SHEET 5)
SCALE: 3/4" = 1'-0"
(OTHER SHAPES APPLY. SEE SHAPES TABLE ON SHEET 1)

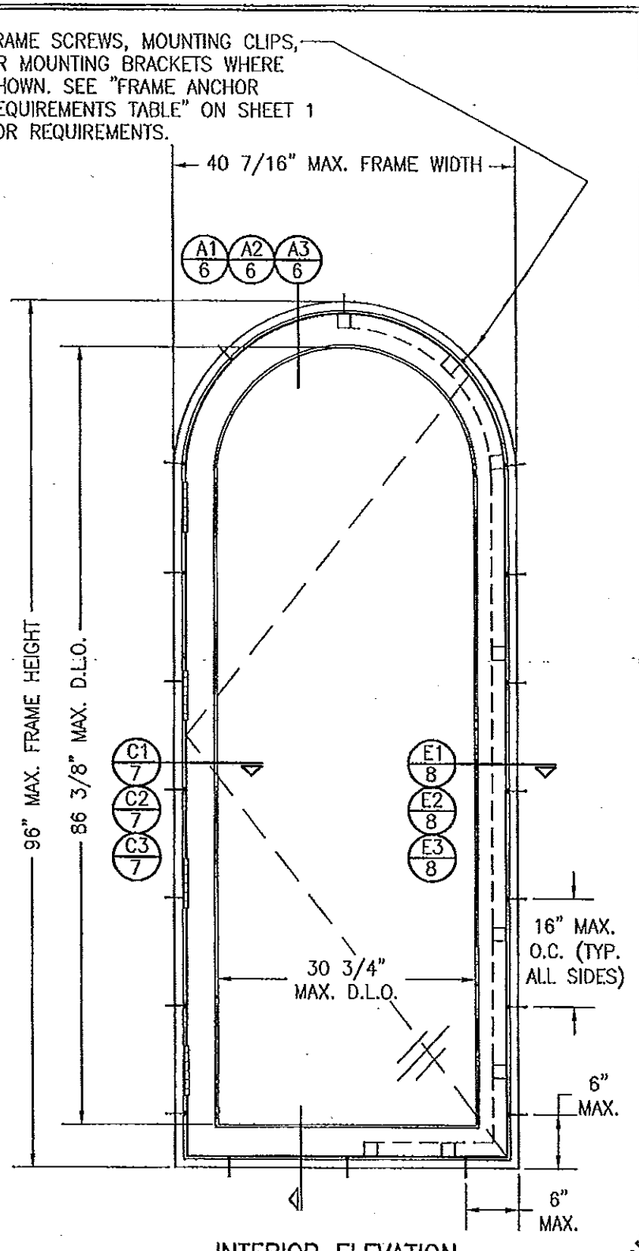


INTERIOR ELEVATION
SINGLE HALF ROUND HINGED WINDOW UNIT
(FOR TILT-TURN CONDITION, SEE ELEVATION ON SHEET 5)
SCALE: 3/4" = 1'-0"
(OTHER SHAPES APPLY. SEE SHAPES TABLE ON SHEET 1)

PRODUCT REVISED
as complying with the Florida Building Code
Acceptance No 11-1024.12
Expiration Date 08/18/2015
By Manuel Perez
Miami Dade Product Control

PRODUCT REVISED
as complying with the Florida Building Code
Acceptance No 14-0429.12
Expiration Date Aug. 18, 2015
By Manuel Perez
Miami Dade Product Control

| DRAWN BY: S.T.R. | CHECKED BY: W.W.S. |
|---|---|
| PLOT: 1=16 | DATE: 3/18/05 |

| NO. | REVISION DESCRIPTION | BY | DATE |
|---|---|---|---|

DRAWING TITLE
AMERICAN IN-SWING CASEMENT IMPACT WOOD WINDOWS

MANUFACTURER
PEETZ WINDOWS & DOORS
15951 S.W. 41ST STREET; SUITE 150
WESTON, FL 33331
954-659-3887

CONSULTANTS
W. W. SCHAEFER ENGINEERING & CONSULTING, P.A. (CA 6809)
7480 150TH COURT NORTH
PALM BEACH GARDENS, FL 33418
PHONE: 561-744-3424

CERTIFICATION
WARREN W. SCHAEFER, P.E.
LICENSE No. 44135
STATE OF FLORIDA
PROFESSIONAL ENGINEER

DRAWING NO. 1320A
REV. B
SHEET NO. 2 OF 10

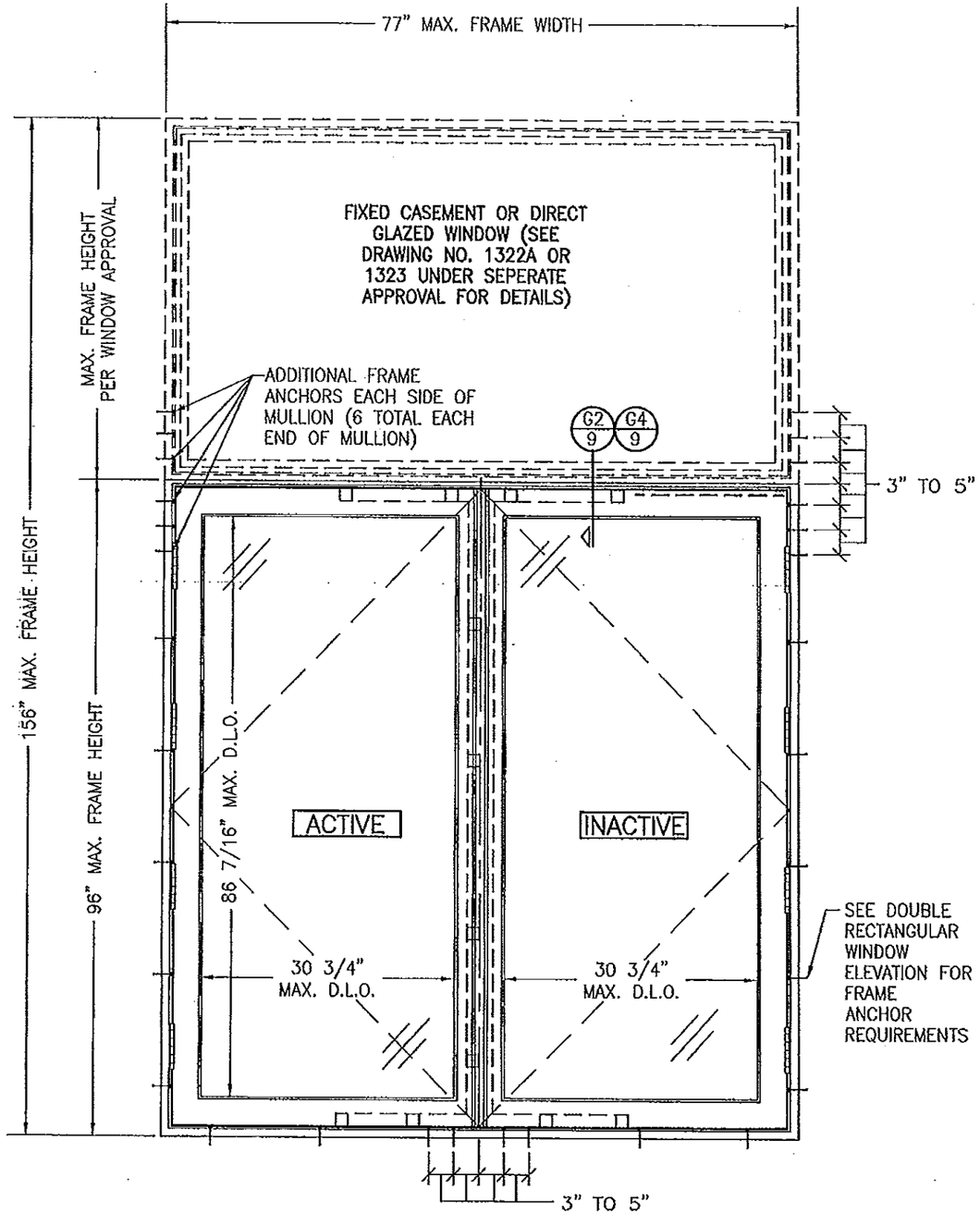


INTERIOR ELEVATION
DOUBLE WINDOW UNIT WITH TRANSOM
(HINGED WINDOW SHOWN. TILT–TURN ALSO APPLIES)
SCALE: N.T.S.
SEE DOUBLE RECTANGULAR WINDOW ELEVATION FOR WINDOW DETAIL NOT SHOWN

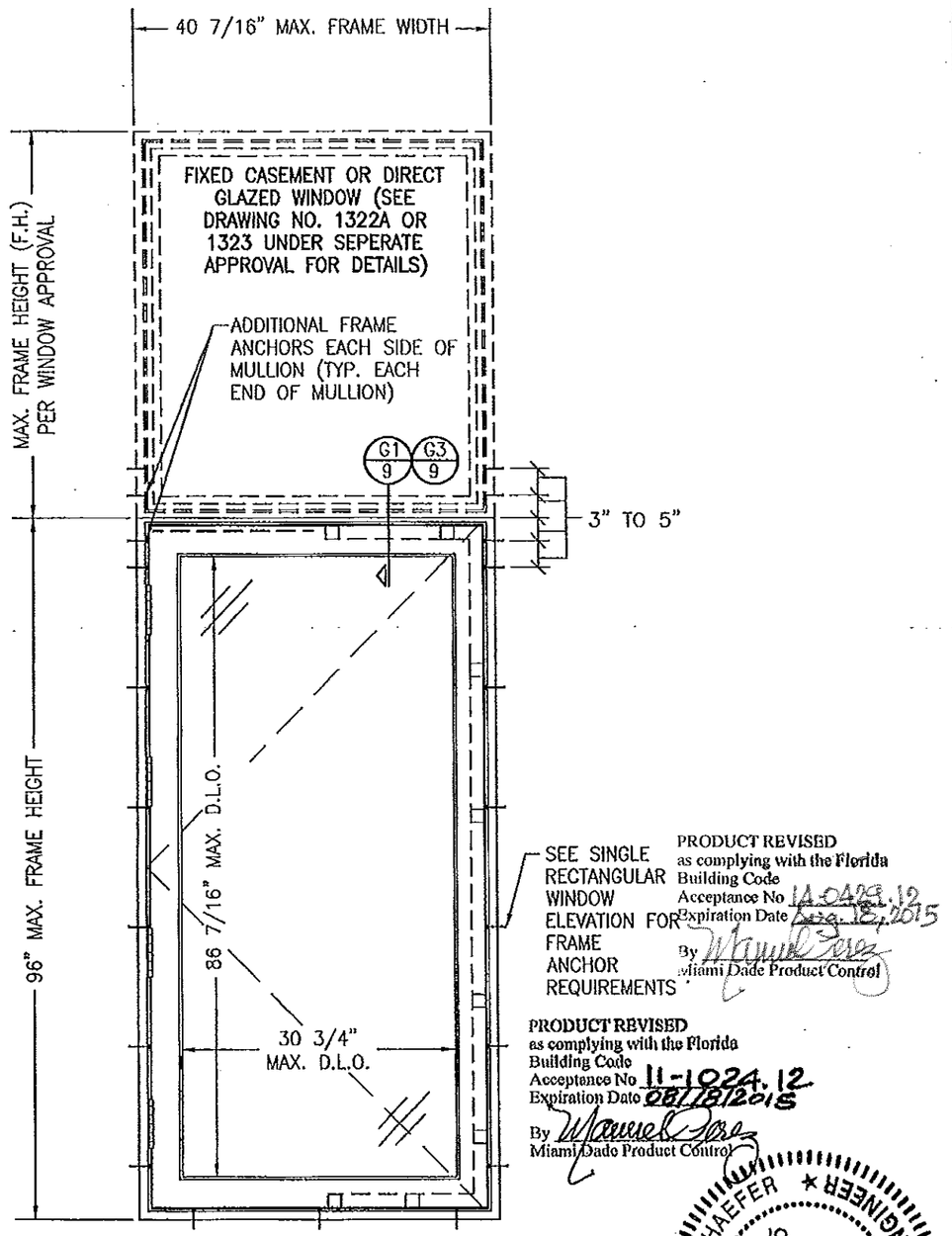


PRODUCT REVISED
as complying with the Florida Building Code
Acceptance No 11-0429.12
Expiration Date Aug. 18, 2015
By Manuel Perez
Miami Dade Product Control

PRODUCT REVISED
as complying with the Florida Building Code
Acceptance No 11-1024.12
Expiration Date 08/18/2015
By Manuel Perez
Miami Dade Product Control

INTERIOR ELEVATION
SINGLE WINDOW UNIT WITH TRANSOM
(HINGED WINDOW SHOWN. TILT–TURN ALSO APPLIES)
SCALE: N.T.S.
SEE SINGLE RECTANGULAR WINDOW ELEVATION FOR WINDOW DETAIL NOT SHOWN

WARREN W. SCHAEFER ★ ENGINEER ★ No. 44135 ★ STATE OF FLORIDA ★ PROFESSIONAL ENGINEER

| DRAWN BY: S.T.R. | CHECKED BY: W.W.S. |
|---|---|
| PLOT: 1=16 | DATE: 3/18/05 |

| NO. | REVISION DESCRIPTION | BY | DATE |
|---|---|---|---|
| | | | |

DRAWING TITLE
AMERICAN IN–SWING CASEMENT IMPACT WOOD WINDOWS

MANUFACTURER
PEETZ WINDOWS & DOORS
15951 S.W. 41ST STREET; SUITE 150
WESTON, FL 33331
954–659–3887

CONSULTANTS
W. W. SCHAEFER ENGINEERING & CONSULTING, P.A. (CA 6809)
7480 150TH COURT NORTH
PALM BEACH GARDENS, FL 33418
PHONE: 561–744–3424

CERTIFICATION
OCT 19 2011
WARREN W. SCHAEFER P.E. P.E. NO. 44135

DRAWING NO. 1320A | REV. B
SHEET NO. 3 OF 10

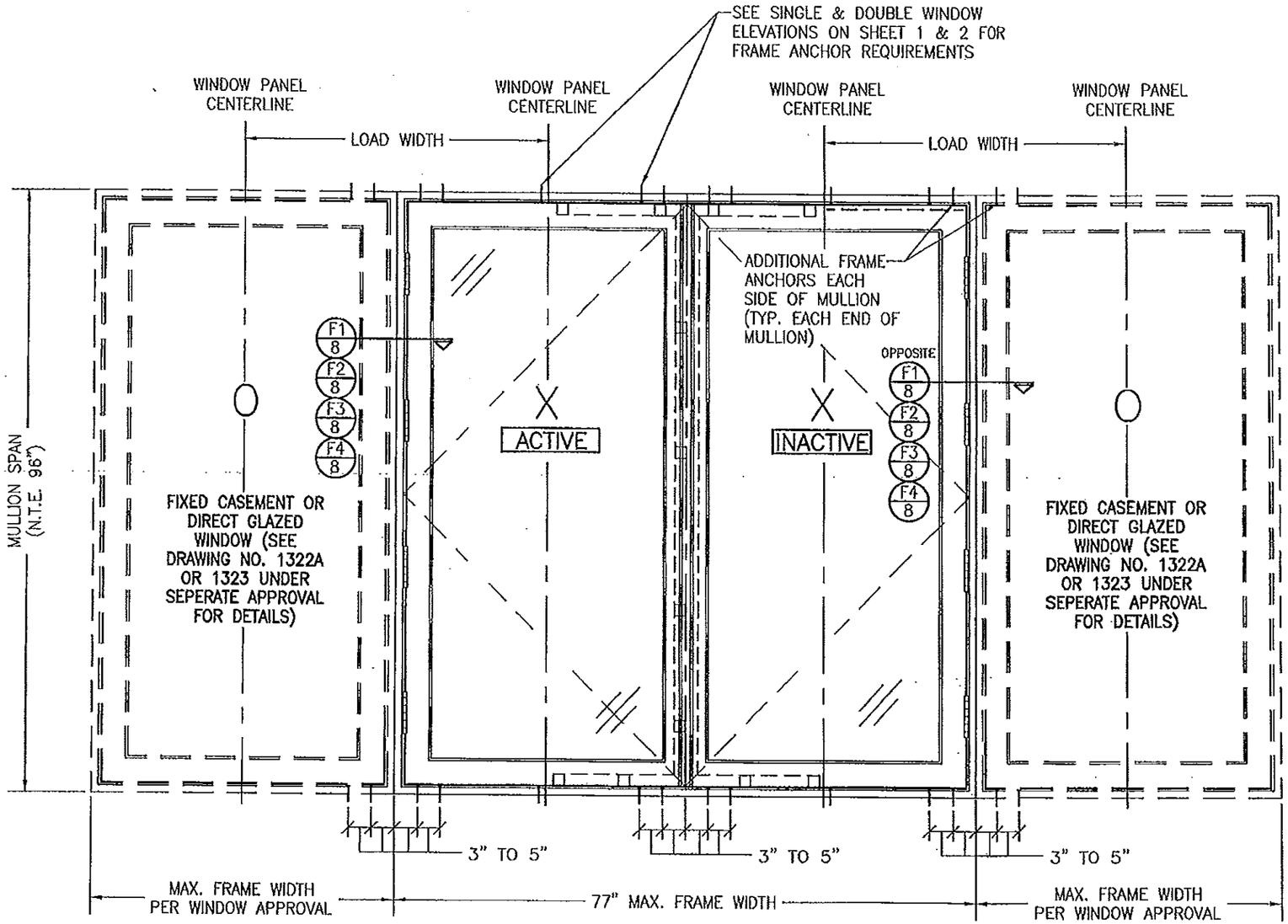


## INTERIOR ELEVATION
## DOUBLE WINDOW UNIT WITH SIDELITES

(HINGED WINDOW SHOWN. TILT–TURN ALSO APPLIES)
SCALE: N.T.S.

SEE DOUBLE & SINGLE WINDOW ELEVATIONS FOR DETAIL NOT SHOWN
(OXXO UNIT SHOWN. ALL OTHER FIXED/OPERABLE COMBINATIONS ALSO APPLY WITH THE MULLION CONDITIONS SHOWN.)

| MULLION ALLOWABLE LOAD TABLE | | | |
|---|---|---|---|
| MAXIMUM MULLION SPAN (IN.) | MAXIMUM LOAD WIDTH (IN.) | ALLOWABLE PRESSURE (POS. & NEG. PSF) | |
| | | NON–REINFORCED MULLION | REINFORCED MULLION |
| 96 | 54 | 47.0 | 53.2 |
| | 48 | 51.8 | 58.6 |
| | 42 | 57.9 | 65.5 |
| | 39 | 61.9 | 70.0 |
| | 36 | 65.8 | 75.0 |
| | 30 | 75.0 | 75.0 |
| 90 | 54 | 54.2 | 61.3 |
| | 48 | 59.5 | 65.9 |
| | 42 | 66.6 | 72.1 |
| | 39 | 70.2 | 75.0 |
| | 36 | 74.4 | 75.0 |
| | 30 | 75.0 | 75.0 |
| 84 | 54 | 63.6 | 67.9 |
| | 48 | 69.3 | 72.5 |
| | 42 | 75.0 | 75.0 |
| 78 | 54 | 75.0 | 75.0 |

LESSER OF THE PRESSURE SHOWN IN THIS TABLE & THAT ALLOWED FOR THE INDIVIDUAL WINDOW SHALL CONTROL AS ALLOWABLE FOR THE OVERALL UNIT.

PRODUCT REVISED
as complying with the Florida
Building Code
Acceptance No 14-0429.12
Expiration Date Aug. 15, 2015
By Manuel Perez
Miami Dade Product Control

PRODUCT REVISED
as complying with the Florida
Building Code
Acceptance No 11-1024.12
Expiration Date 08/18/2015
By Manuel Perez
Miami Dade Product Control

WARREN W. SCHAEFER ★ LICENSE No. 44135 ★ STATE OF FLORIDA ★ PROFESSIONAL ENGINEER

| DRAWN BY: S.T.R. | CHECKED BY: W.W.S. |
|---|---|
| PLOT: 1=16 | DATE: 3/18/05 |

| NO. | REVISION DESCRIPTION | BY | DATE |
|---|---|---|---|

DRAWING TITLE
AMERICAN IN–SWING CASEMENT IMPACT WOOD WINDOWS

MANUFACTURER
PEETZ WINDOWS & DOORS
15951 S.W. 41ST STREET; SUITE 150
WESTON, FL 33331
954–659–3887

CONSULTANTS
W. W. SCHAEFER ENGINEERING & CONSULTING, P.A. (CA 6809)
7480 150TH COURT NORTH
PALM BEACH GARDENS, FL 33418
PHONE: 561–744–3424

CERTIFICATION
OCT 19 2011
WARREN W. SCHAEFER, P.E.
P.E. NO. 44135

DRAWING NO. 1320A
REV. B
SHEET NO. 4 OF 10

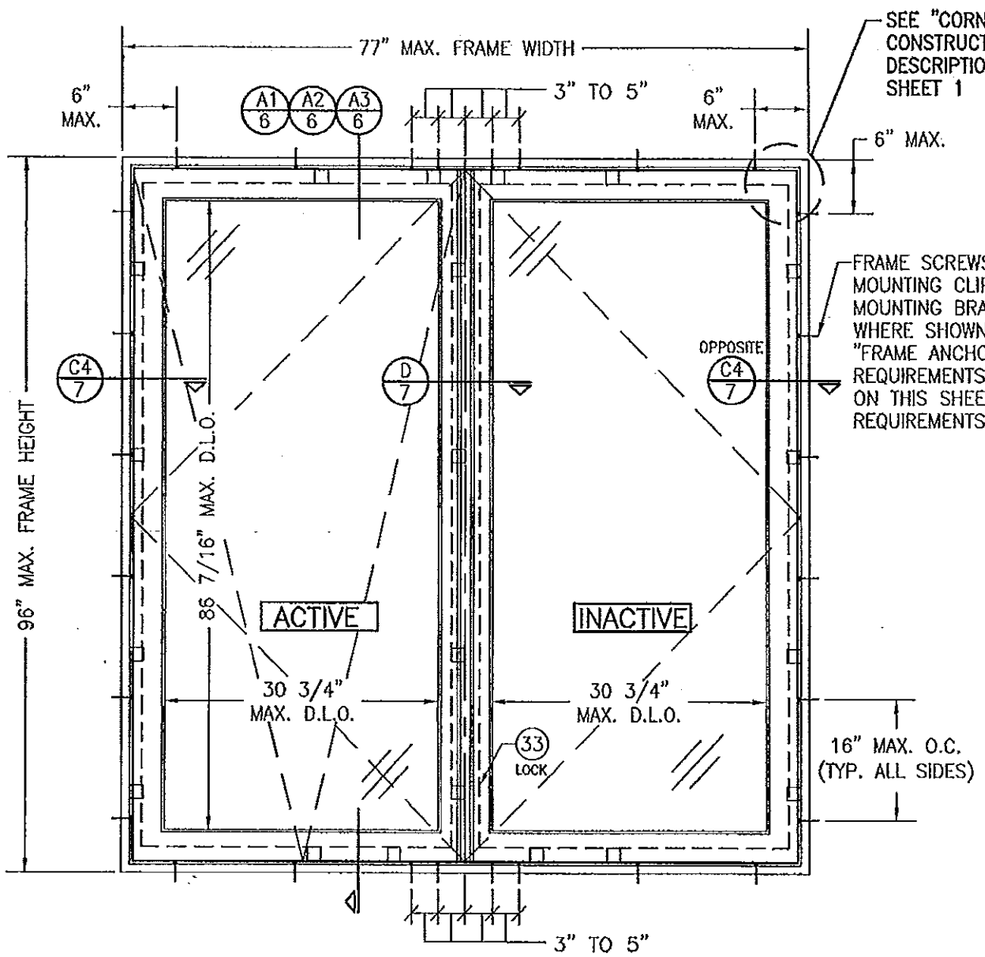


INTERIOR ELEVATION
DOUBLE RECTANGULAR TILT–TURN WINDOW UNIT
SCALE: N.T.S.
(ALSO APPLICABLE FOR ALL SHAPED WINDOWS)

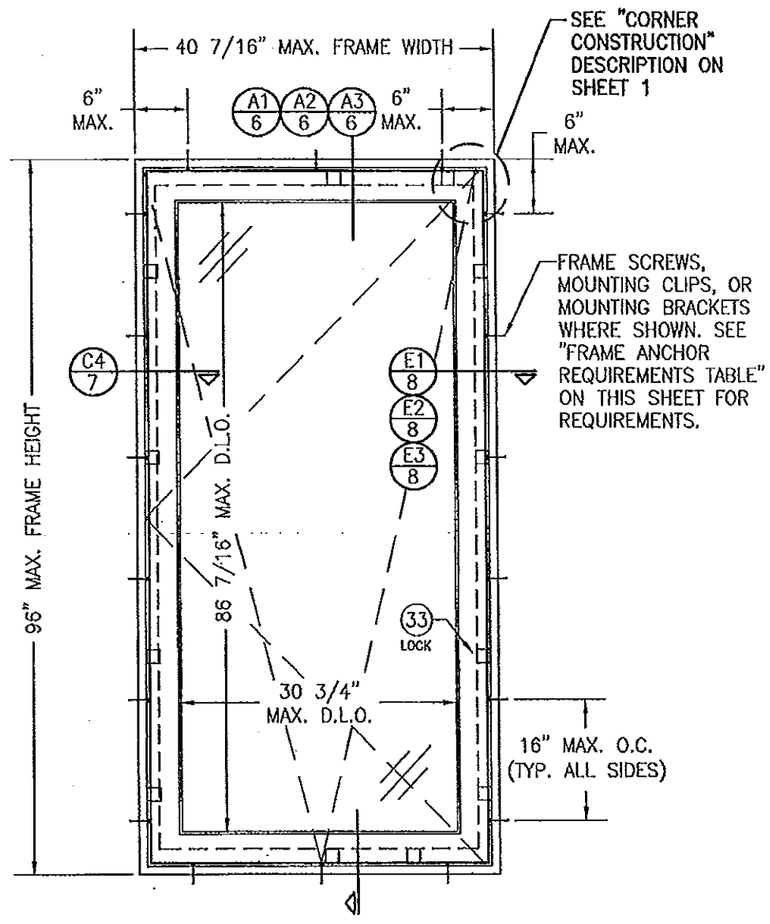


INTERIOR ELEVATION
SINGLE RECTANGULAR TILT–TURN WINDOW UNIT
SCALE: N.T.S.
(ALSO APPLICABLE FOR ALL SHAPED WINDOWS)

PRODUCT REVISED
as complying with the Florida
Building Code
Acceptance No 14-0429.12
Expiration Date Dec 18, 2015
By Manuel Perez
Miami Dade Product Control

PRODUCT REVISED
as complying with the Florida
Building Code
Acceptance No 11-1024.12
Expiration Date 08/18/2015
By Manuel Perez
Miami Dade Product Control

WARREN W. SCHAEFER P.E. LICENSE No. 44135 STATE OF FLORIDA PROFESSIONAL ENGINEER

DRAWN BY: S.T.R. | CHECKED BY: W.W.S.
PLOT: 1=16 | DATE: 3/18/05

| NO. | REVISION DESCRIPTION | BY | DATE |
|---|---|---|---|

DRAWING TITLE
AMERICAN IN–SWING CASEMENT IMPACT WOOD WINDOWS

MANUFACTURER
PEETZ WINDOWS & DOORS
15951 S.W. 41ST STREET; SUITE 150
WESTON, FL 33331
954–659–3887

CONSULTANTS
W. W. SCHAEFER ENGINEERING & CONSULTING, P.A. (CA 6809)
7480 150TH COURT NORTH
PALM BEACH GARDENS, FL 33418
PHONE: 561–744–3424

CERTIFICATION
OCT 19 2011
WARREN W. SCHAEFER P.E.
P.E. NO. 44135

DRAWING NO. 1320A | REV. B
SHEET NO. 5 OF 10

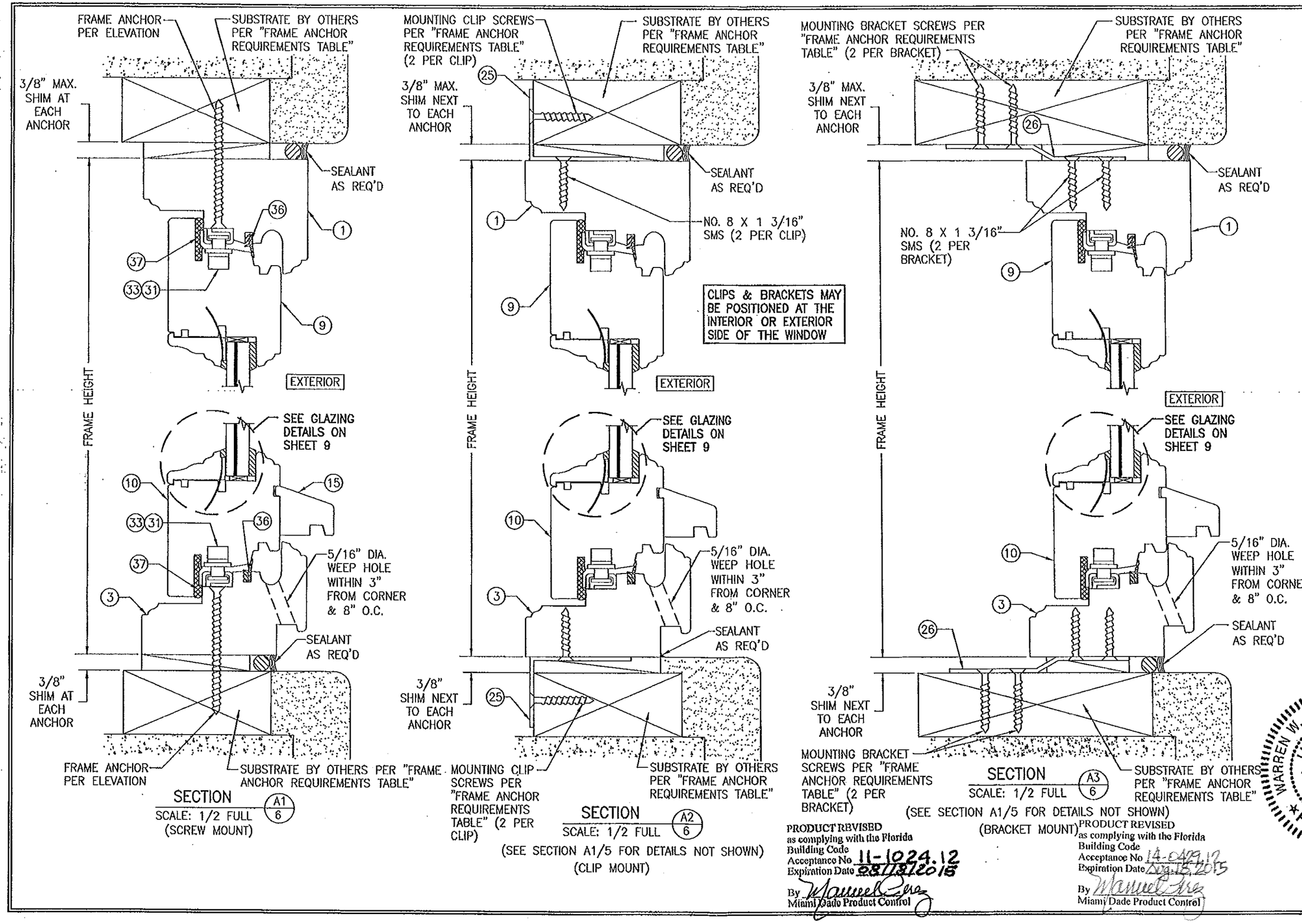


PRODUCT REVISED
as complying with the Florida Building Code
Acceptance No 11-1024.12
Expiration Date 08/18/2015
By Manuel Perez
Miami Dade Product Control

PRODUCT REVISED
as complying with the Florida Building Code
Acceptance No 14-0429.12
Expiration Date Aug. 18, 2015
By Manuel Perez
Miami Dade Product Control

| DRAWN BY: S.T.R. | CHECKED BY: W.W.S. |
|---|---|
| PLOT: 1=2 | DATE: 3/18/05 |

| NO. | REVISION DESCRIPTION | BY | DATE |
|---|---|---|---|
| | | | |

DRAWING TITLE
AMERICAN IN-SWING CASEMENT IMPACT WOOD WINDOWS

MANUFACTURER
PEETZ WINDOWS & DOORS
15951 S.W. 41ST STREET; SUITE 150
WESTON, FL 33331
954-659-3887

CONSULTANTS
WARREN W. SCHAEFER ENGINEERING CONSULTING, P.A. (CA 6809)
7480 150TH COURT NORTH
PALM BEACH GARDENS, FL 33418
PHONE: 561-744-3424

CERTIFICATION
WARREN W. SCHAEFER
LICENSE No. 44135
STATE OF FLORIDA
PROFESSIONAL ENGINEER
WARREN W. SCHAEFER, P.E. No. 44135

| DRAWING NO. | REV. |
|---|---|
| 1320A | B |

SHEET NO. 6 OF 10

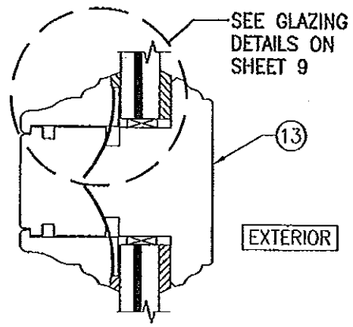


SECTION B/7
SCALE: 1/2 FULL

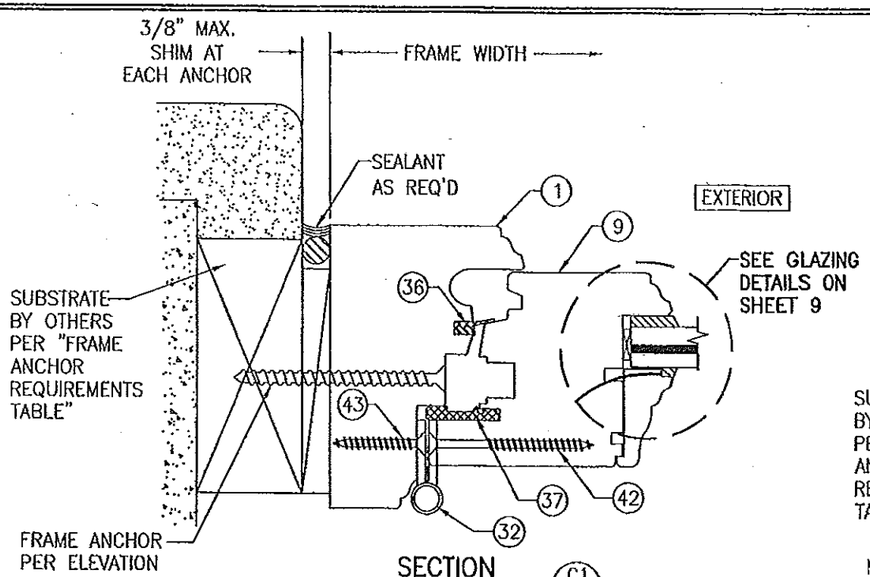


SECTION C1/7
SCALE: 1/2 FULL
(SCREW MOUNT)

CLIPS & BRACKETS MAY BE POSITIONED AT THE INTERIOR OR EXTERIOR SIDE OF THE WINDOW

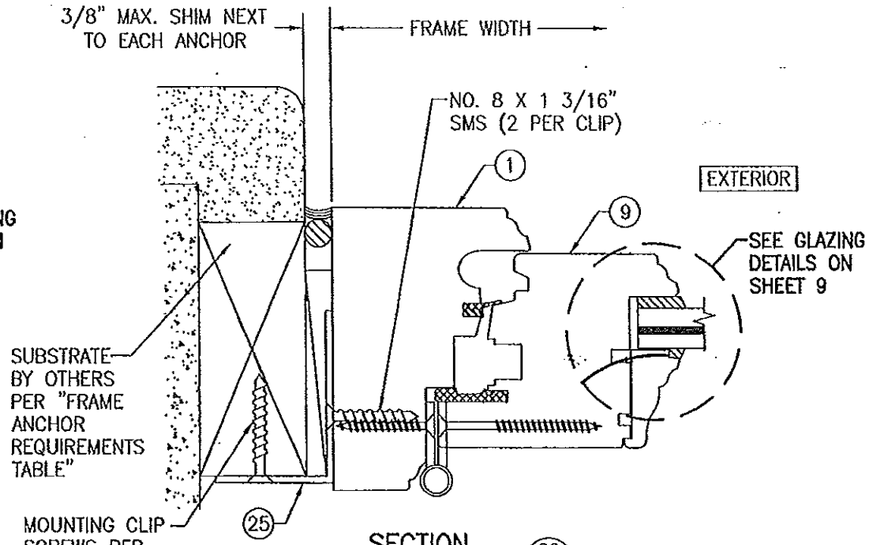


SECTION C2/7
SCALE: 1/2 FULL
(SEE SECTION C1/6 FOR DETAILS NOT SHOWN)
(CLIP MOUNT)

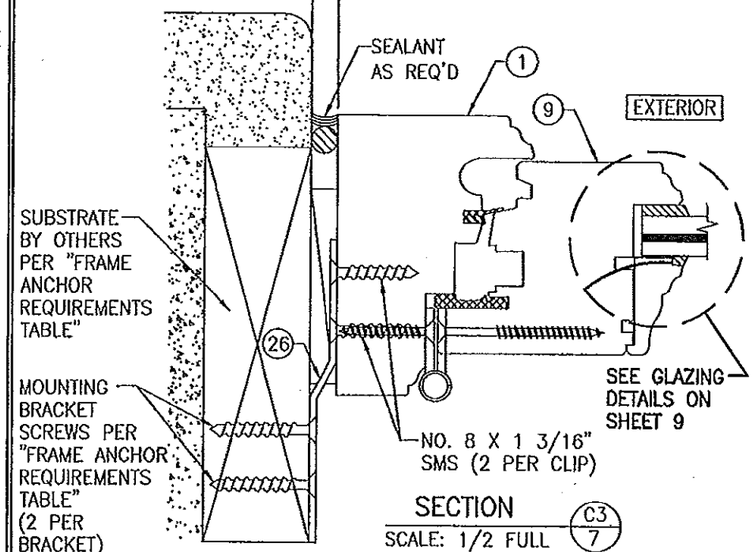


SECTION C3/7
SCALE: 1/2 FULL
(SEE SECTION C1/6 FOR DETAILS NOT SHOWN)
(BRACKET MOUNT)

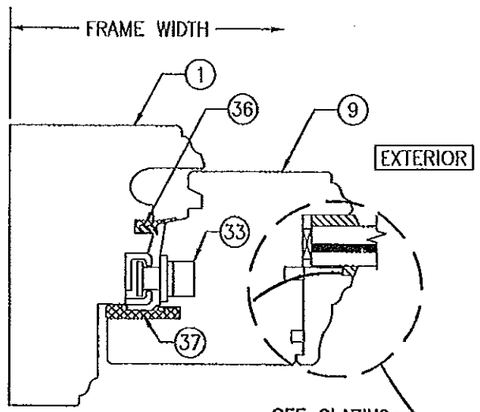


SECTION C4/7
SCALE: 1/2 FULL
(FOR INSTALLATION REQUIREMENTS, SEE SECTIONS C1/7, C2/7, & C3/7)

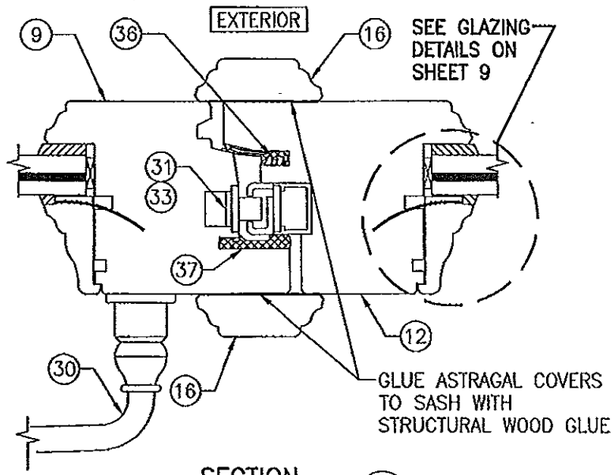


SECTION D/7
SCALE: 1/2 FULL

PRODUCT REVISED
as complying with the Florida Building Code
Acceptance No 11-1024.12
Expiration Date 08/18/2016
By Manuel Perez
Miami Dade Product Control

PRODUCT REVISED
as complying with the Florida Building Code
Acceptance No 11-1024.12
Expiration Date 08/18/2016
By Manuel Perez
Miami Dade Product Control

WARREN W. SCHAEFER LICENSE No. 44135 STATE OF FLORIDA PROFESSIONAL ENGINEER

OCT 19 2011

WARREN W. SCHAEFER, P.E.
P.E. NO. 44135

| NO. | REVISION DESCRIPTION | BY | DATE |
|---|---|---|---|
| | | | |

DRAWN BY: S.T.R. | CHECKED BY: W.W.S.
PLOT: 1=2 | DATE: 3/18/05

DRAWING TITLE: AMERICAN IN-SWING CASEMENT IMPACT WOOD WINDOWS

MANUFACTURER: PEETZ WINDOWS & DOORS
15951 S.W. 41ST STREET; SUITE 150
WESTON, FL 33331
954-659-3887

CONSULTANTS: W. W. SCHAEFER ENGINEERING & CONSULTING, P.A. (CA 6809)
7480 150TH COURT NORTH
PALM BEACH GARDENS, FL 33418
PHONE: 561-744-3424

CERTIFICATION

DRAWING NO. 1320A | REV. B
SHEET NO. 7 OF 10

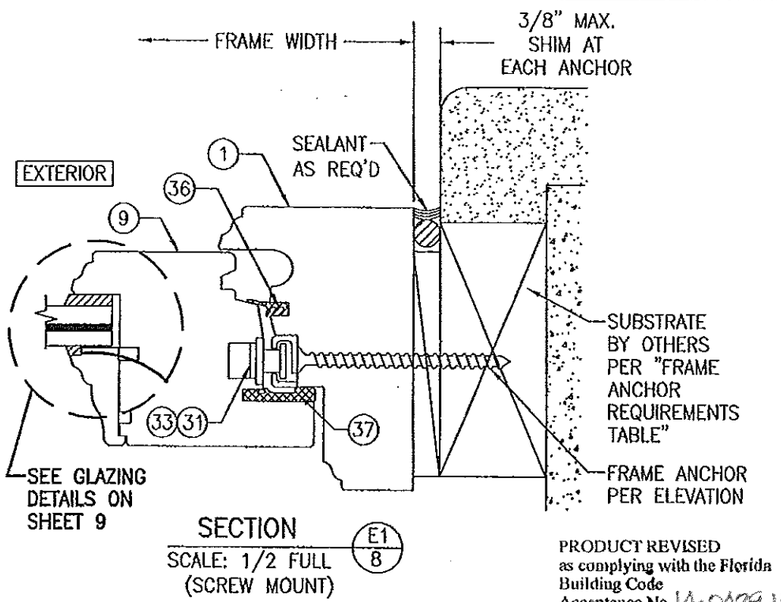


SECTION E1/8
SCALE: 1/2 FULL
(SCREW MOUNT)

PRODUCT REVISED
as complying with the Florida Building Code
Acceptance No 14-0429.12
Expiration Date Aug 12, 2015
By Manuel Perez
Miami Dade Product Control

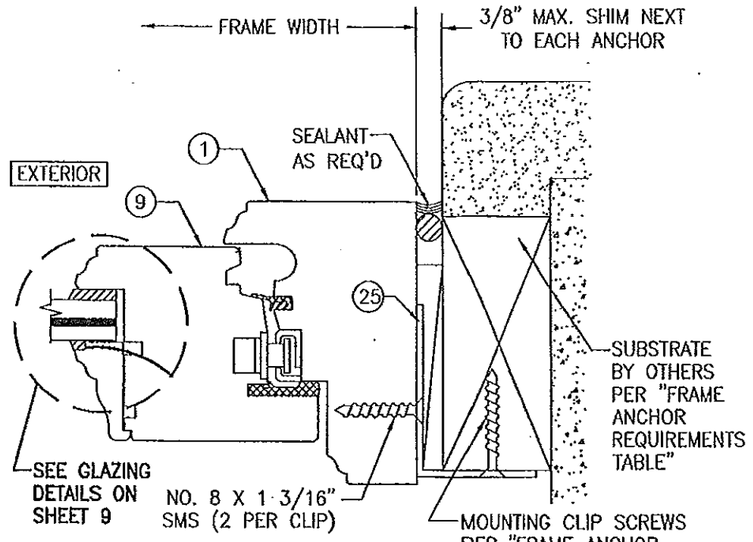


SECTION E2/8
SCALE: 1/2 FULL
(CLIP MOUNT)
(SEE SECTION E1/7 FOR DETAILS NOT SHOWN)

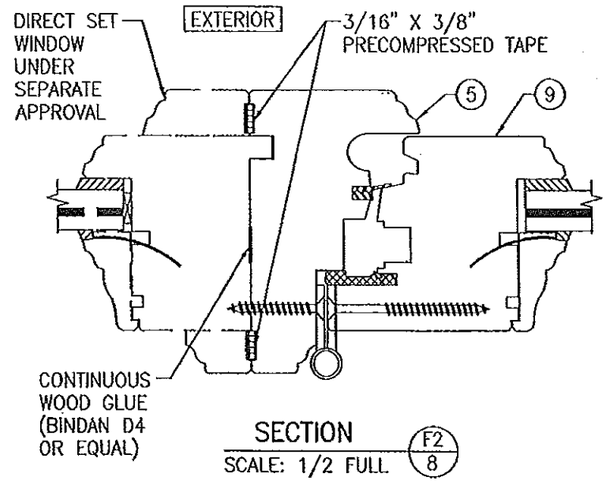


SECTION F2/8
SCALE: 1/2 FULL

(SEE OTHER SECTIONS FOR DETAILS NOT SHOWN)

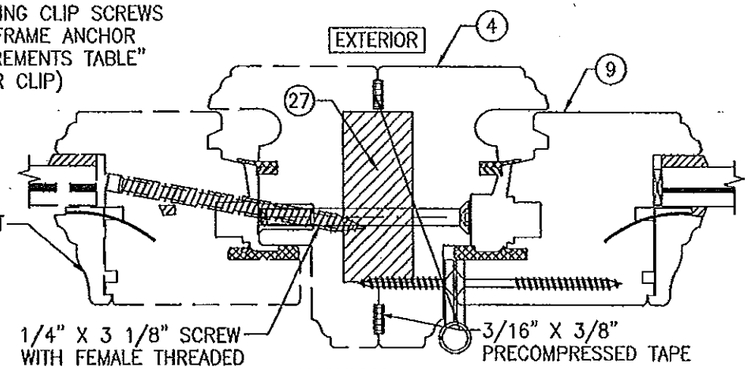


SECTION F3/8
SCALE: 1/2 FULL

(SEE OTHER SECTIONS FOR DETAILS NOT SHOWN)

CLIPS & BRACKETS MAY BE POSITIONED AT THE INTERIOR OR EXTERIOR SIDE OF THE WINDOW

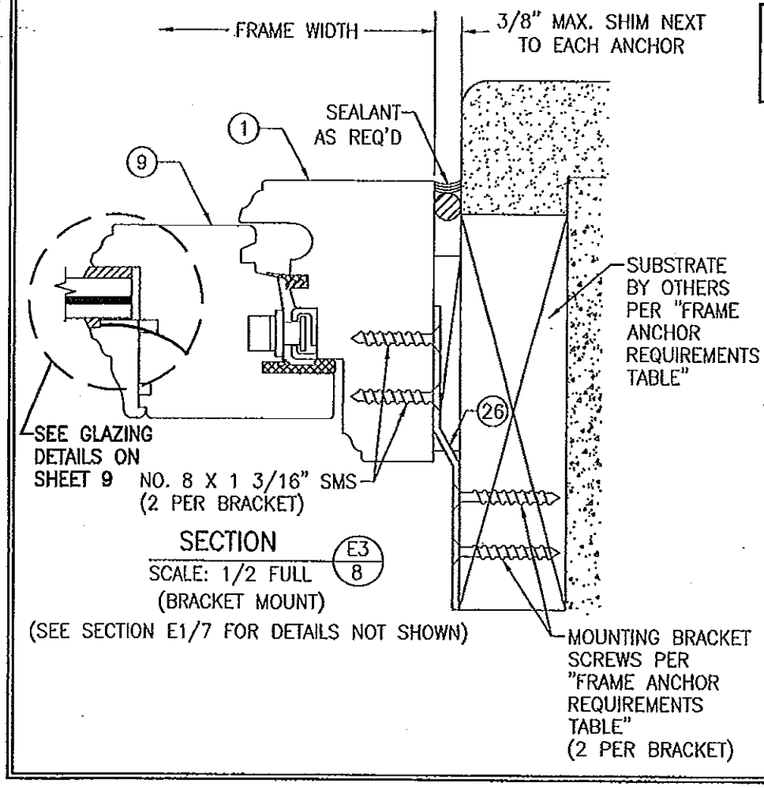


SECTION E3/8
SCALE: 1/2 FULL
(BRACKET MOUNT)
(SEE SECTION E1/7 FOR DETAILS NOT SHOWN)

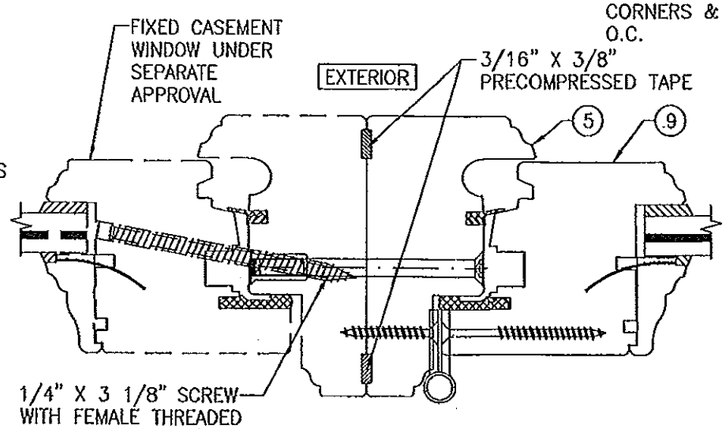


SECTION F1/8
SCALE: 1/2 FULL

(SEE OTHER SECTIONS FOR DETAILS NOT SHOWN)

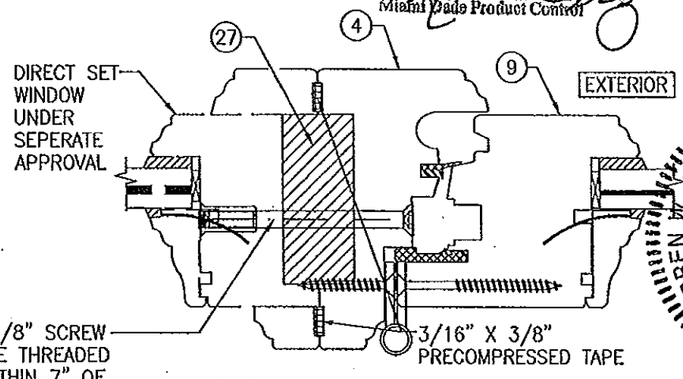


SECTION F4/8
SCALE: 1/2 FULL

(SEE OTHER SECTIONS FOR DETAILS NOT SHOWN)

PRODUCT REVISED
as complying with the Florida Building Code
Acceptance No 11-1024.12
Expiration Date 08/18/2015
By Manuel Perez
Miami Dade Product Control

| DRAWN BY: S.T.R. | CHECKED BY: W.W.S. |
|---|---|
| PLOT: 1=2 | DATE: 3/18/05 |

| NO. | REVISION DESCRIPTION | BY | DATE |
|---|---|---|---|
| | | | |

DRAWING TITLE
AMERICAN IN-SWING CASEMENT IMPACT WOOD WINDOWS

MANUFACTURER
PEETZ WINDOWS & DOORS
15951 S.W. 41ST STREET; SUITE 150
WESTON, FL 33331
954-659-3887

CONSULTANTS
W.-W. SCHAEFER ENGINEERING CONSULTING, P.A. (CA 6809)
7480 150TH COURT NORTH
PALM BEACH GARDENS, FL 33418
PHONE: 561-744-3424

CERTIFICATION
WARREN W. SCHAEFER LICENSE NO. 44135 STATE OF FLORIDA PROFESSIONAL ENGINEER

| DRAWING NO. | REV. |
|---|---|
| 1320A | B |

SHEET NO.
8 OF 10

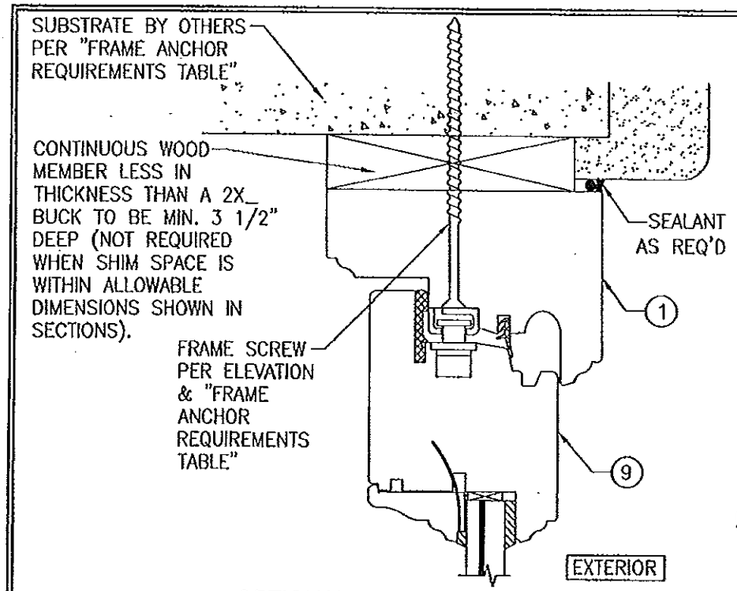


## OPTIONAL DIRECT MOUNT DETAIL TO SUBSTRATE WITH SPACER

(HEAD SECTION SHOWN; SILL & SIDES ARE INSTALLED THE SAME)
(FOR DETAIL NOT SHOWN, SEE OTHER SECTIONS)

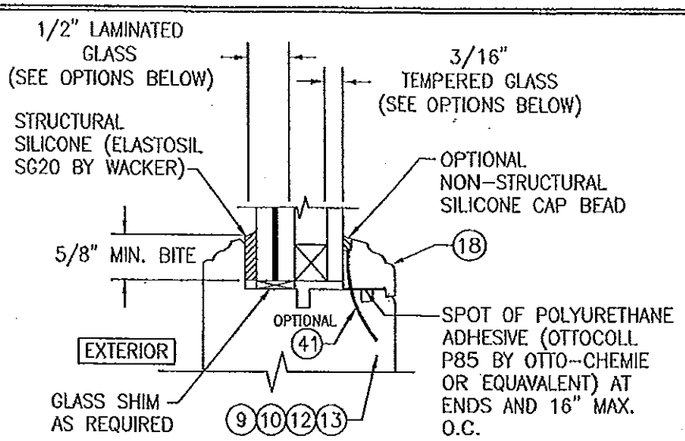


## I.G. GLAZING DETAIL

GLASS OPTION:
1. 1/2" THICK SOLUTIA SAFLEX III LAMINATED OUTER GLASS (3/16" AN/0.09 SAFLEX IIIG PVB/1/4" AN); 3/16" TEMPERED SINGLE PANE INNER GLASS & 1/2" AIR SPACE
2. 1/2" THICK SOLUTIA VANCEVA LAMINATED OUTER GLASS (3/16" AN/0.075" VANCEVA/1/4" AN); 3/16" TEMPERED SINGLE PANE INNER GLASS & 1/2" AIR SPACE

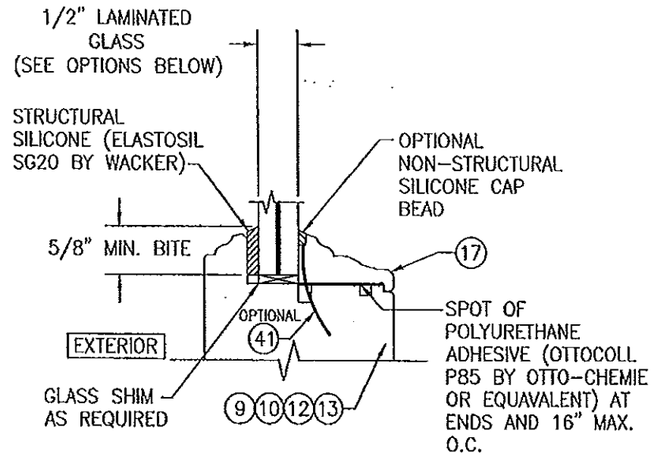


## NON-I.G. GLAZING DETAIL

GLASS OPTION:
1. 1/2" THICK SOLUTIA SAFLEX III LAMINATED GLASS (3/16" AN/0.09 SAFLEX IIIG PVB/1/4" AN)
2. 1/2" THICK SOLUTIA VANCEVA LAMINATED GLASS (3/16" AN/0.075" VANCEVA/1/4" AN)

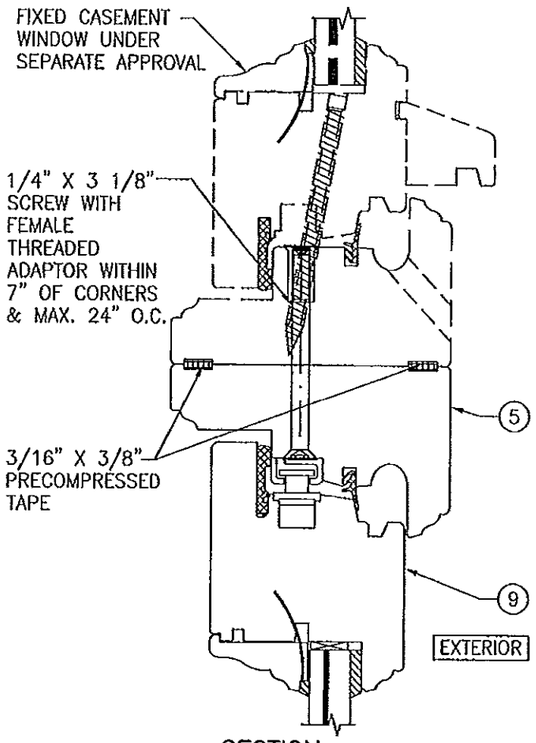


SECTION G1 / 9
SCALE: 1/2 FULL
(SEE DETAIL A1/5 FOR DETAILS NOT SHOWN)

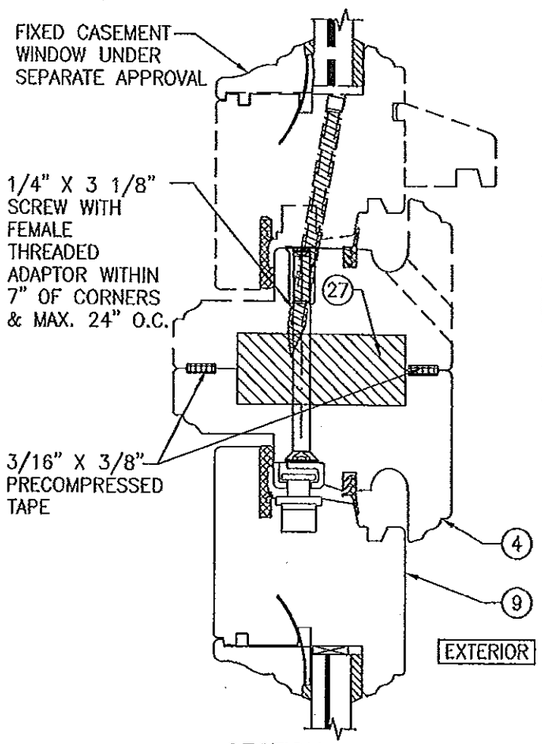


SECTION G2 / 9
SCALE: 1/2 FULL
(SEE DETAIL A1/5 FOR DETAILS NOT SHOWN)

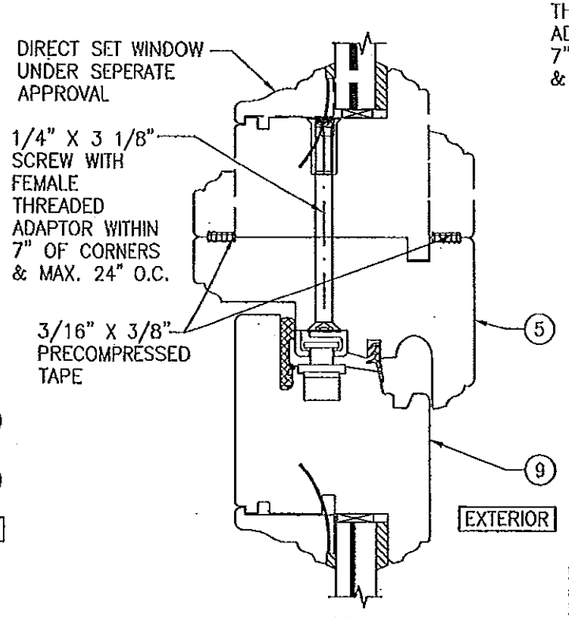


SECTION G3 / 9
SCALE: 1/2 FULL
(SEE DETAIL A1/5 FOR DETAILS NOT SHOWN)

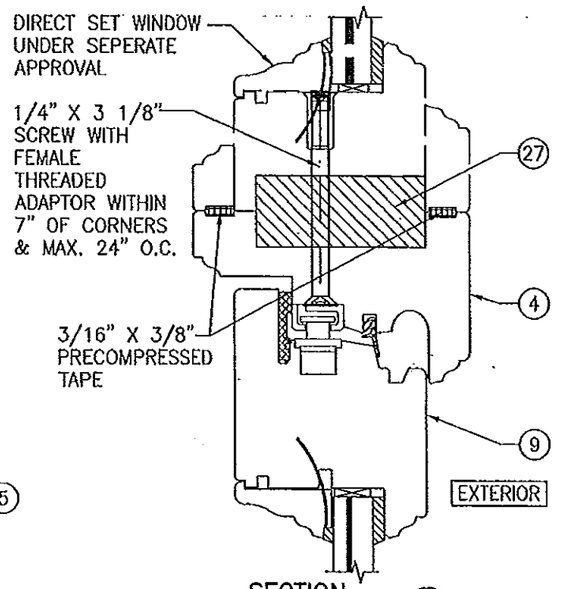


SECTION G4 / 9
SCALE: 1/2 FULL
(SEE DETAIL A1/5 FOR DETAILS NOT SHOWN)

PRODUCT REVISED
as complying with the Florida Building Code
Acceptance No 11-1024.12
Expiration Date 08/18/2015
By Manuel Perez
Miami Dade Product Control

PRODUCT REVISED
as complying with the Florida Building Code
Acceptance No 14-0429.16
Expiration Date Jun 18 2015
By Manuel Perez
Miami Dade Product Control

| NO. | REVISION DESCRIPTION | BY | DATE |
|---|---|---|---|
| | | | |

DRAWN BY: S.T.R. | CHECKED BY: W.W.S.
PLOT: 1=2 | DATE: 3/18/05

DRAWING TITLE: AMERICAN IN-SWING CASEMENT IMPACT WOOD WINDOWS
MANUFACTURER: PEETZ WINDOWS & DOORS
15951 S.W. 41ST STREET; SUITE 150
WESTON, FL 33331
954-659-3887

CONSULTANTS
W. SCHAEFER ENGINEERING & CONSULTING, P.A. (CA 6809)
7480 150TH COURT NORTH
PALM BEACH GARDENS, FL 33418
PHONE: 561-744-3424

WARREN W. SCHAEFER
CERTIFICATE OF AUTHORIZATION
No. 44135
STATE OF FLORIDA
PROFESSIONAL ENGINEER
No. 44135
STATE OF FLORIDA
OCT 09 2014

DRAWING NO. 1520A | REV. 1B
SHEET NO. 9 OF 10

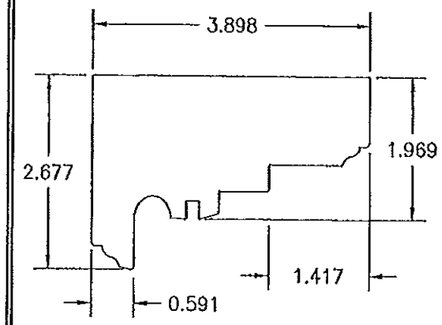


(1) HEAD AND SIDE JAMB

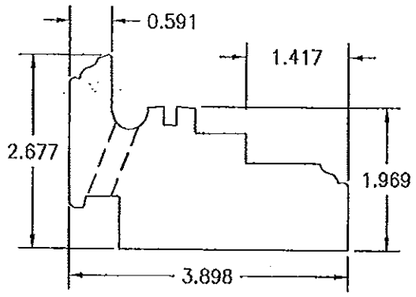


(3) SILL JAMB

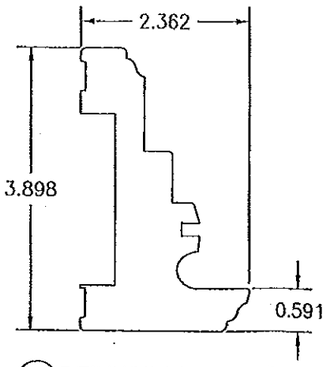


(4) REINFORCED MULLION HEAD JAMB

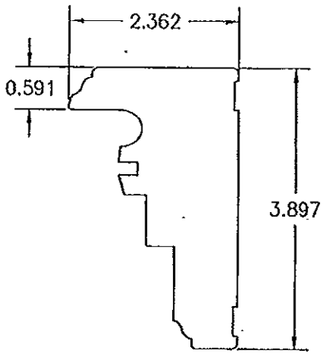


(5) NON-REINFORCED MULLION JAMB

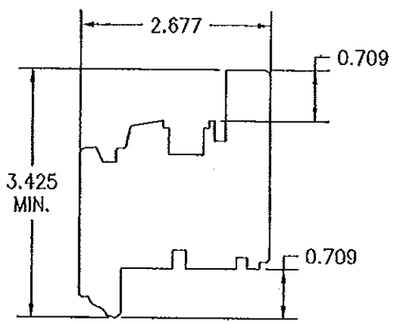


(9) HEAD AND SIDE SASH

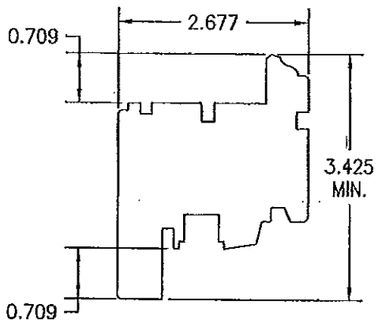


(10) SILL SASH

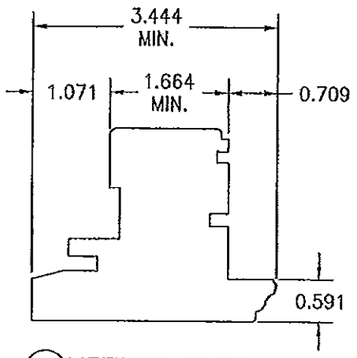


(12) MEETING SASH

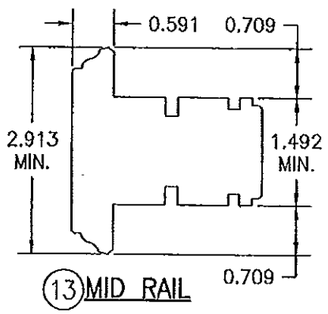


(13) MID RAIL

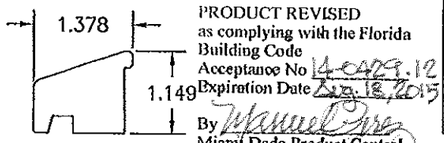


(15) SILL DRIP

PRODUCT REVISED
as complying with the Florida Building Code
Acceptance No 14-0429.12
Expiration Date Aug. 18, 2015
By Manuel Perez
Miami Dade Product Control

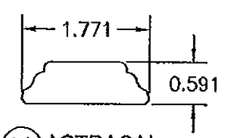


(16) ASTRAGAL COVER

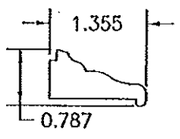


(17) NON-I.G. GLAZING BEAD

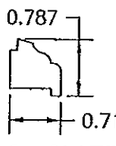


(18) I.G. GLAZING BEAD

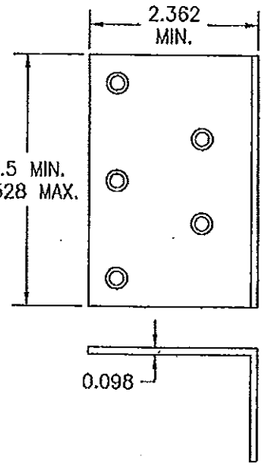


(25) FRAME INSTALLATION CLIP

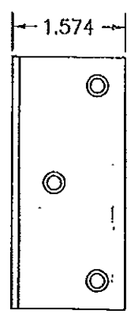


PRODUCT REVISED
as complying with the Florida Building Code
Acceptance No 11-1024.12
Expiration Date 08/18/2015
By Manuel Perez
Miami Dade Product Control

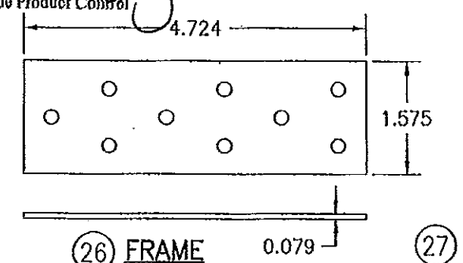


(26) FRAME INSTALLATION BRACKET

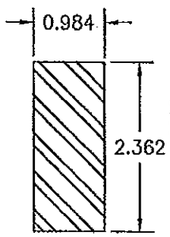


(27) TRANSOM MULLION REINFORCEMENT

| ITEM # | ITEM DESCRIPTION | MANUFACTURER/NOTES |
|---|---|---|
| | PARTS | |
| 1 | HEAD AND SIDE JAMB | WOOD |
| 3 | SILL JAMB | WOOD |
| 4 | REINFORCED MULLION HEAD JAMB | WOOD |
| 5 | NON--REINFOCED MULLION JAMB | WOOD |
| 9 | HEAD AND SIDE SASH | WOOD |
| 10 | SILL SASH | WOOD |
| 12 | MEETING SASH | WOOD |
| 13 | MID RAIL | WOOD |
| 15 | SILL DRIP | WOOD |
| 16 | ASTRAGAL COVER | WOOD |
| 17 | NON-I.G. GLAZING BEAD | WOOD |
| 18 | I.G. GLAZING BEAD | WOOD |
| 25 | FRAME INSTALLATION CLIP | GALVANIZED 34.1 KSI STEEL |
| 26 | FRAME INSTALLATION BRACKET | GALVANIZED 34.1 KSI STEEL |
| 27 | MULLION REINFORCEMENT | A36 STEEL (FY = 36 KSI) |
| | HARDWARE | |
| 30 | LOCK HANDLE | AS REQUIRED TO OPERATE LOCKS |
| 31 | MULTI-POINT LOCK SYSTEM (HINGED WINDOW) | GU, ROTO OR SIEGENIA MUSHROOM CAM SYSTEM |
| 32 | HINGE (2 3/16" X 5 1/2") | BRASS BY BROS |
| 33 | MULTI-POINT LOCK SYSTEM (TILT-TURN WINDOW) | SIEGENIA MUSHROOM CAM SYSTEM WITH CONCEALED HINGES |
| | SEALS AND SEALANTS | |
| 36 | SWEEP | GTG EPDM |
| 37 | COMPRESSION SEAL | SCHLEGEL |
| 38 | 3/8" X 3/16" PRECOM PRESSED TAPE | N/A |
| | FASTENERS | |
| 40 | .295" X 3 5/8" AMO III GALVANIZED STEEL SCREWS | 5 1/2" FROM INNER CORNERS & 14" O.C. |
| 41 | OPTIONAL 18 GA. X 1 1/4" GALVANIZED CURVED NAIL | 10" FROM CORNERS & 20" O.C. |
| 42 | 3/16" X 1 3/16" SCREWS | 4 PER HINGE (@ DOOR) |
| 43 | 3/16" X 2 3/4" SCREWS | 4 PER HINGE (@ JAMB) |

NOTE: WOOD USED IN TESTING WAS MAHOGANY WITH A SPECIFIC GRAVITY OF G = 0.67 AND A MODULUS OF ELASTICITY OF E = 1,700,000 PSI. OTHER WOOD SPECIES APPLICABLE FOR USE WITH THIS PRODUCT ARE THOSE WITH A SPECIFIC GRAVITY OF 0.67 AND MODULUS OF ELASTICITY OF 1,700,000 PSI OR GREATER. ALL WOOD IS MINIMUM GRADE 2 MILLED BY PEETZ WINDOWS & DOORS TO SELECT.

DRAWN BY: S.T.R. | CHECKED BY: W.W.S.
PLOT: 1=2 | DATE: 3/18/05

| NO. | REVISION DESCRIPTION | BY | DATE |
|---|---|---|---|

DRAWING TITLE
AMERICAN IN-SWING CASEMENT IMPACT WOOD WINDOWS
MANUFACTURER
PEETZ WINDOWS & DOORS
15951 S.W. 41ST STREET; SUITE 150
WESTON, FL 33331
954-659-3887

CONSULTANTS
W. W. SCHAEFER ENGINEERING & CONSULTING, P.A. (CA 6809)
7480 150TH COURT NORTH
PALM BEACH GARDENS, FL 33418
PHONE: 561-744-3424

CERTIFICATION
OCT 19 2011
WARREN W. SCHAEFER, P.E.
P.E. NO. 44135

WARREN W. SCHAEFER * ENGINEER * LICENSE No. 44135 * STATE OF FLORIDA * PROFESSIONAL

DRAWING NO. 1320A | REV. B
SHEET NO. 10 OF 10