MIAMI-DADE COUNTY
DEPARTMENT OF REGULATORY AND ECONOMIC RESOURCES (RER)
BOARD AND CODE ADMINISTRATION DIVISION

MIAMI-DADE COUNTY
PRODUCT CONTROL SECTION
11805 SW 26 Street, Room 208
T (786) 315-2590 F (786) 315-2599
www.miamidade.gov/economy

NOTICE OF ACCEPTANCE (NOA)

Pella Corporation
102 Main Street
Pella, IA 50219

SCOPE:

This NOA is being issued under the applicable rules and regulations governing the use of construction materials. The documentation submitted has been reviewed and accepted by Miami-Dade County RER - Product Control Section to be used in Miami Dade County and other areas where allowed by the Authority Having Jurisdiction (AHJ).

This NOA shall not be valid after the expiration date stated below. The Miami-Dade County Product Control Section (In Miami Dade County) and/or the AHJ (in areas other than Miami Dade County) reserve the right to have this product or material tested for quality assurance purposes. If this product or material fails to perform in the accepted manner, the manufacturer will incur the expense of such testing and the AHJ may immediately revoke, modify, or suspend the use of such product or material within their jurisdiction. RER reserves the right to revoke this acceptance, if it is determined by Miami-Dade County Product Control Section that this product or material fails to meet the requirements of the applicable building code.

This product is approved as described herein, and has been designed to comply with the Florida Building Code, including the High Velocity Hurricane Zone.

DESCRIPTION: Series "Steel Reinforced and Unreinforced" Clipped Aluminum Plate Mullion – L.M.I.

APPROVAL DOCUMENT: Drawing No. **1252**, titled "Plate Mullion," sheets 1 through 4 of 4, dated 09/14/04, with revision A1 dated 10/21/11, prepared by W.W. Schaefer Engineering & Consulting, P.A., signed and sealed by Warren W. Schaefer, P.E., bearing the Miami-Dade County Product Control Renewal stamp with the Notice of Acceptance number and expiration date by the Miami-Dade County Product Control Section.

MISSILE IMPACT RATING: Large and Small Missile Impact Resistant

LABELING: Each unit shall bear a permanent label with the manufacturer's name or logo, city, state, model/series, and following statement: "Miami-Dade County Product Control Approved", unless otherwise noted herein.

RENEWAL of this NOA shall be considered after a renewal application has been filed and there has been no change in the applicable building code negatively affecting the performance of this product.

TERMINATION of this NOA will occur after the expiration date or if there has been a revision or change in the materials, use, and/or manufacture of the product or process. Misuse of this NOA as an endorsement of any product, for sales, advertising or any other purposes shall automatically terminate this NOA. Failure to comply with any section of this NOA shall be cause for termination and removal of NOA.

ADVERTISEMENT: The NOA number preceded by the words Miami-Dade County, Florida, and followed by the expiration date may be displayed in advertising literature. If any portion of the NOA is displayed, then it shall be done in its entirety.

INSPECTION: A copy of this entire NOA shall be provided to the user by the manufacturer or its distributors and shall be available for inspection at the job site at the request of the Building Official.

This NOA **renews NOA# 11-1026.13** and consists of this page 1 and evidence page E-1, as well as approval document mentioned above.

The submitted documentation was reviewed by **Manuel Perez, P.E.**

MIAMI-DADE COUNTY APPROVED

7/28/14

Pella Corporation

NOTICE OF ACCEPTANCE: EVIDENCE SUBMITTED

A. DRAWINGS

1. Manufacturer's die drawings and sections.
2. Drawing No. **1252**, titled: "Plate Mullion", sheets 1 through 4 of 4, dated 09/14/04, with revision A1 dated 10/21/11, prepared by W.W. Schaefer Engineering & Consulting P.A., signed and sealed by Warren W. Schaefer, P.E.
   (Submitted under previous NOA# 11-1026.13)

B. TESTS

1. Test reports on: 1) Uniform Static Air Pressure Test, Loading per FBC, TAS 202-94.
   2) Large Missile Impact Test per FBC, TAS 201-94.
   3) Cyclic Wind Pressure Loading per FBC, TAS 203-94.
   along with installation diagram of mulled Pella fixed window assemblies, prepared by Architectural Testing, Test Report No.**ATI-02-50043.01**, dated 03/23/04, signed and sealed by Joseph A. Reed, P.E.
   (Submitted under NOA #05-0105.01)

C. CALCULATIONS:

1. Anchor verification calculations and structural analysis, complying with **FBC-2010** and **FBC-5th Edition (2014)**, dated 09/25/03 and 09/14/04, updated on 10/27/09, 10/21/11 and 04/15/14, prepared by W.W. Schaefer Engineering & Consulting, P.A., signed and sealed by Warren W. Schaefer, P.E.
   (Submitted partially under previous NOA# 09-1116.08)

D. QUALITY ASSURANCE

1. Miami-Dade Department of Regulatory and Economic Resources (RER)

E. MATERIAL CERTIFICATIONS

1. None.

F. STATEMENTS

1. Statement letter of conformance, complying with **FBC-2010** and **FBC-5th Edition (2014)**, dated 04/15/14, prepared by W.W. Schaefer Engineering & Consulting, P.A., signed and sealed by Warren W. Schaefer, P.E.
2. Statement letter of no financial interest, dated 04/15/14, prepared by W.W. Schaefer Engineering & Consulting, P.A., signed and sealed by Warren W. Schaefer, P.E.

G. OTHERS

1. Notice of Acceptance No. **11-1026.13**, issued to Pella Corporation for their Clipped, Steel Reinforced and Unreinforced Aluminum Plate Mullion – L.M.I., approved on 01/12/12 and expiring on 03/24/15.

Manuel Perez

Manuel Perez, P.E.
Product Control Examiner
NOA No. 14-0505.01
Expiration Date: March 24, 2020
Approval Date: August 07, 2014

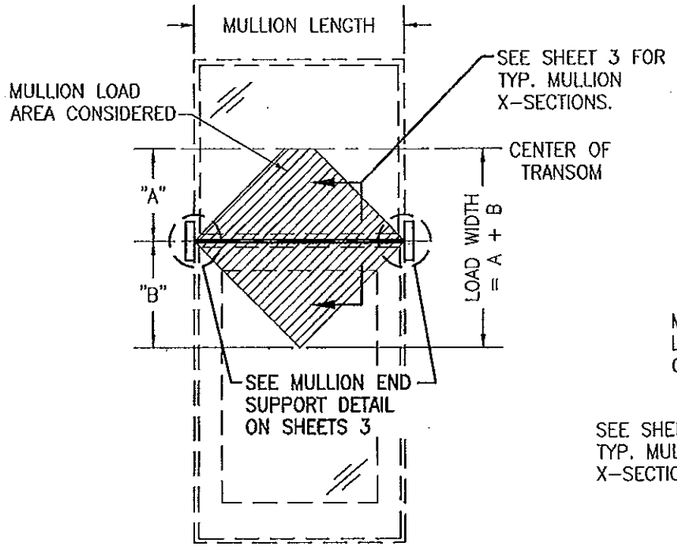

"A" = LESSER OF (MULLION LENGTH/2) OR (TRANSOM HEIGHT/2)
"B" = MULLION LENGTH/2

SINGLE WINDOW OR DOOR WITH FIXED TRANSOM
(SEE LOAD TABLE 1.0)
NOTE: WINDOW/DOOR MAY BE ANY FIXED OR OPERABLE UNIT
NOTE: MULLION MAY BE HORIZONTAL OR VERTICAL

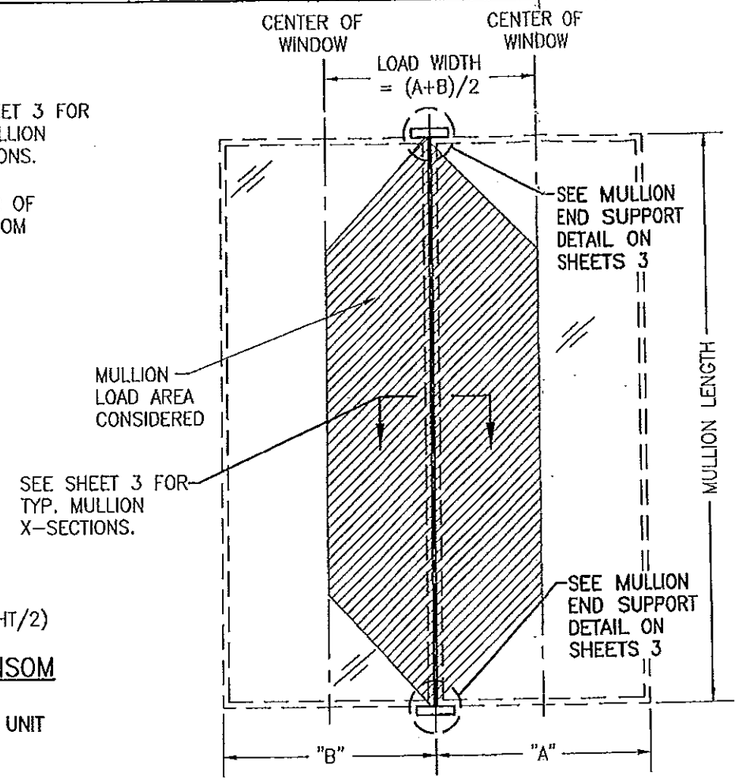

FIXED WINDOW TO FIXED WINDOW WHEN WINDOW WIDTHS ARE LESS THAN OR EQUAL TO THE MULLION LENGTH
(SEE LOAD TABLE 1.0)
NOTE: MULLION MAY BE HORIZONTAL OR VERTICAL

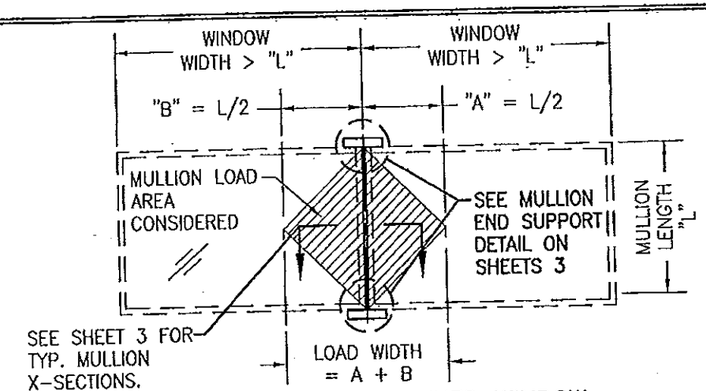

FIXED WINDOW TO FIXED WINDOW WHEN WINDOW WIDTHS ARE GREATER THAN THE MULLION LENGTH
(SEE LOAD TABLE 1.0)

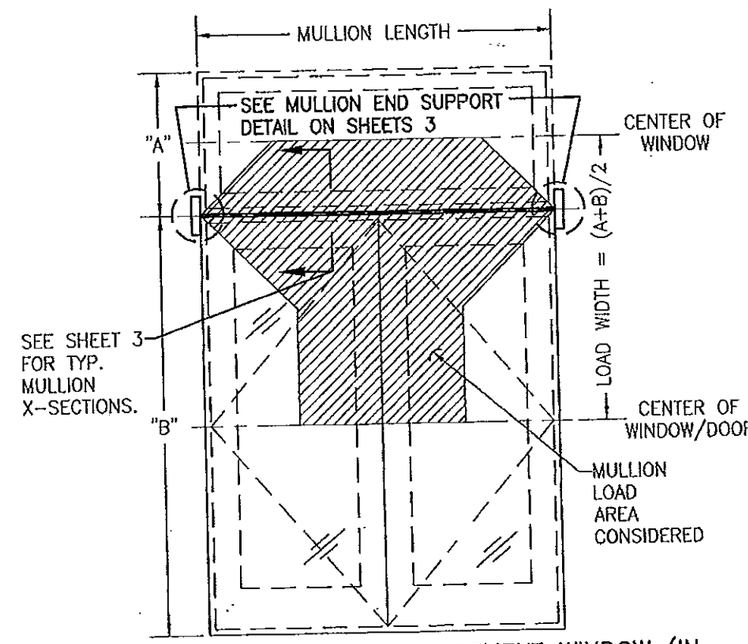

DOUBLE PANEL DOOR OR CASEMENT WINDOW (IN A SINGLE FRAME) WITH A SINGLE FIXED TRANSOM
(SEE LOAD TABLE 2.0)
NOTE: DOORS & WINDOWS MAY BE SWING OR SLIDING

GENERAL NOTES (ALL DRAWING SHEETS):

1. DOORS & WINDOWS SHALL BE UNDER SEPERATE N.O.A. SEE THE PRODUCTS SPECIFIC N.O.A. FOR THEIR USE.
2. THESE MULLION SYSTEMS HAVE BEEN ANALYZED AND CERTIFIED FOR DESIGN PRESSURES NOT TO EXCEED THOSE SHOWN IN THE LOAD TABLES.
3. OPENINGS, INCLUDING BUCKS (IF USED AS SUPPORT), MUST BE DESIGNED & CONSTRUCTED TO WITHSTAND WIND LOADS TRANSFERRED BY THE MULLIONS END REACTIONS & SUPPORTED WINDOWS/DOORS.
4. ALL MATERIALS & FASTENERS SHALL BE IN ACCORDANCE WITH THESE DRAWINGS & MAY NOT VARY UNLESS SPECIFICALLY MENTIONED ON THE DRAWINGS.
5. THESE MULLION SYSTEMS HAVE BEEN DESIGNED IN ACCORDANCE WITH THE FLORIDA BUILDING CODE (FBC) INCLUDING HIGH VELOCITY HURRICANE ZONES (HVHZ).
6. ANY PELLA ALUMINUM CLAD WOOD PRODUCT APPROVED WINDOW/DOOR MAY BE SUPPORTED BY THESE MULLIONS PROVIDING THEY ARE PROPERLY ANCHORED TO THE MULLION & THE FRAME CROSS SECTION IS NO SMALLER THAN THE FRAME SECTIONS SHOWN IN THE MULLION DETAILS.
7. ALLOWABLE PRESSURE ON THE MULLED UNIT SHALL BE CONTROLLED BY THE LESSER ALLOWABLE PRESSURE OF THE MULLION OR THE INDIVIDUAL DOOR/WINDOW UNITS.
8. WINDOW/DOOR SIZES SHALL BE AS RESTRICTED BY THEIR OWN INDIVIDUAL APPROVALS.
9. FOR WINDOW OR DOOR FRAME TO OPENING ATTACHMENT, SEE THE RESPECTIVE PRODUCT APPROVAL DRAWINGS/SPECIFICATIONS FOR THE WINDOW/DOOR.
10. MULLION LENGTHS & LOAD WIDTHS ARE RESTRICTED BY THOSE SHOWN IN THE TABLES.
11. THE LOADS IN THESE TABLES CONSIDER WORSE CASE OF MULLION STRESS, DEFLECTION AND END REACTION.
12. ANY CONDITIONS NOT COVERED IN THIS CERTIFICATION SHALL BE SUBJECT TO SEPERATE ENGINEERING REVIEW.
13. ALL PLATE MULLIONS SHALL BE 6061--T6 ALUMINUM. ALL CONNECTION CLIPS SHALL BE MIN. 316L STAINLESS STEEL.
14. PLATE MULLIONS MUST BE CONTINUOUS FROM END TO END.
15. WHEN VERTICALLY STACKED, THE MANUFACTURER/INSTALLER SHALL INSURE THAT THE DEAD WEIGHT OF THE ABOVE WINDOWS WILL NOT CAUSE UNDO STRESS ON THE BELOW WINDOWS. THESE MULLIONS ARE DESIGNED TO SUPPORT WIND LOAD ONLY & ARE NOT CONSIDERED TO SUPPORT DEAD LOAD OF THE WINDOWS/DOORS.
16. THIS MULLION PRODUCT HAS BEEN TESTED IN ACCORDANCE WITH FLORIDA BUILDING CODE PROTOCOLS TAS-201, TAS-202 & TAS-203 FOR LARGE MISSILE IMPACT, STRUCTURAL & CYCLIC TESTING.
17. THESE MULLIONS ARE ACCEPTABLE FOR USE WITH PELLA IMPACT & NON-IMPACTED RATED WINDOWS & DOORS.

PRODUCT REVISED as complying with the Florida Building Code
Acceptance No 11-1026.13
Expiration Date March 24, 2015
By Miami Dade Product Control

PRODUCT RENEWED as complying with the Florida Building Code
Acceptance No 14-0505.01
Expiration Date March 24, 2019
By Miami Dade Product Control

THESE DRAWINGS ARE APPLICABLE ONLY TO THE PRODUCT SPECIFIED. THEY MAY NOT BE USED FOR THE ASSEMBLY AND/OR INSTALLATION OF ANY OTHER PRODUCT NOR MAY THEY BE USED FOR RATIONAL AND/OR LOCAL APPROVAL OF ANY PRODUCT NOT PRODUCED BY THE MANUFACTURER STATED ON THESE DRAWINGS.

WARREN W. SCHAEFER LICENSE No. 44135 STATE OF FLORIDA PROFESSIONAL ENGINEER

NO.	REVISION DESCRIPTION	BY	DATE
A1	UPDATE TO CURENT STANDARDS	W.W.S.	10/21/11

DRAWN BY: K.P.S. | CHECKED BY: W.W.S.
PLOT: 1=24 | DATE: 09/16/04

MANUFACTURER: PELLA CORPORATION, 102 MAIN STREET, PELLA, IA 50219, 641-621-1000

CONSULTANTS: W. W. SCHAEFER ENGINEERING & CONSULTING, P.A. (CA 6809), 7480 150TH COURT NORTH, PALM BEACH GARDENS, FL 33418, PHONE: 561-744-3424

DRAWING TITLE: PLATE MULLION

CERTIFICATION: OCT 21 2011 — WARREN W. SCHAEFER, P.E. P.E. NO. 44135

DRAWING NO. 1252 | REV. A
SHEET NO. 1 OF 4

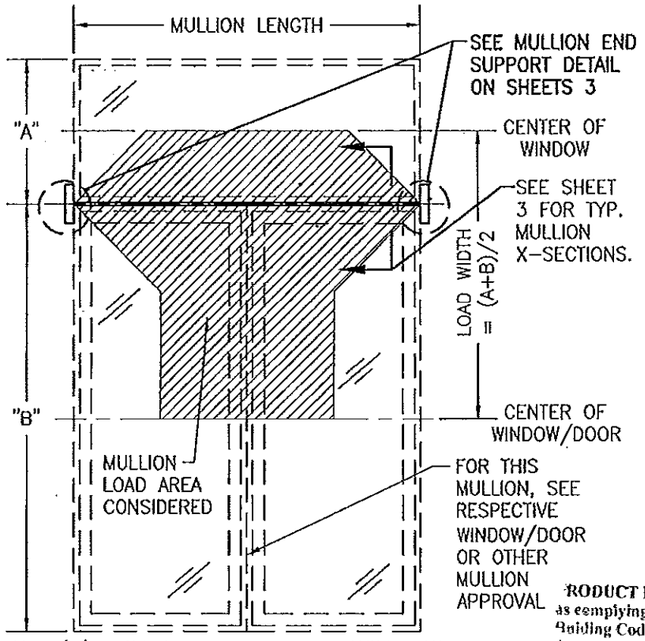

TWO (2) SINGLE DOORS OR WINDOWS WITH A SINGLE FIXED TRANSOM
(SEE LOAD TABLE 3.0)
NOTE: DOORS/WINDOWS MAY BE OPERABLE OR FIXED.

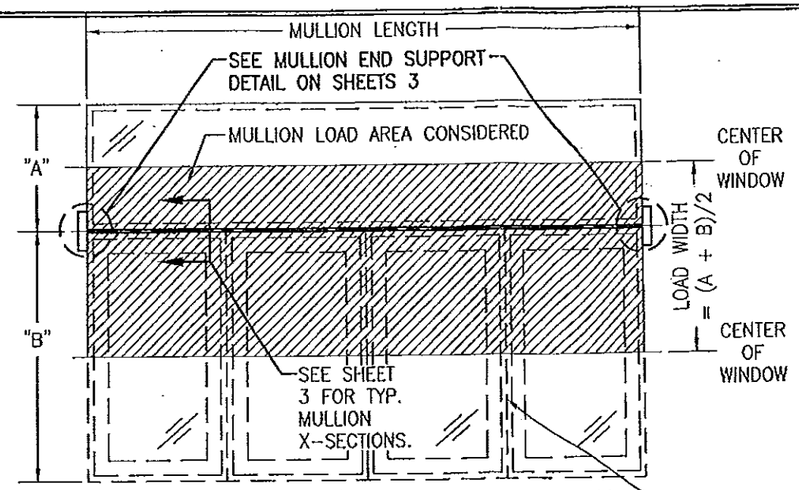

MULTIPLE WINDOWS/DOORS WITH TRANSOM
(SEE LOAD TABLE 4.0)

NOTES: 1. TRANSOM MAY BE SINGLE OR MULTIPLE WINDOWS.
2. BASE UNITS CAN BE ANY TYPE OF DOOR OR WINDOW INCLUDING SLIDING TYPE.

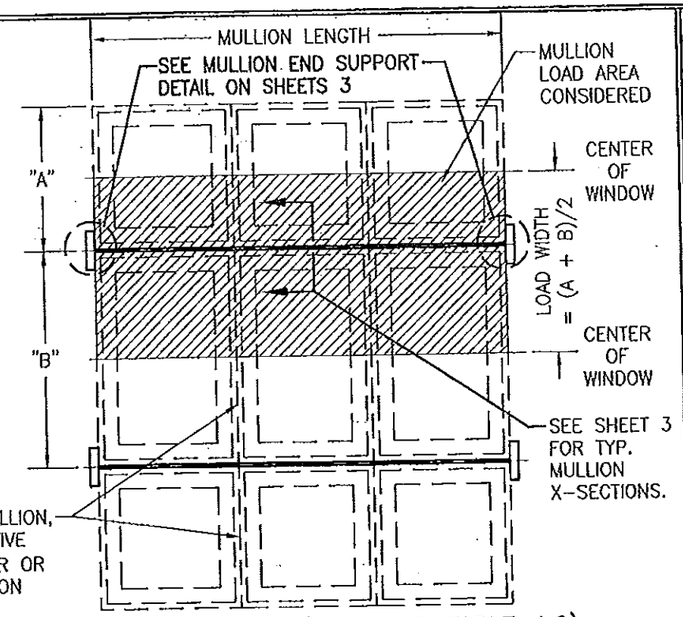

MULTIPLE WINDOWS (SEE LOAD TABLE 4.0)
(CONTINUOUS MULLION MAY BE HORIZONTAL OR VERTICAL (HORIZONTAL SHOWN))

PRODUCT RENEWED
as complying with the Florida Building Code
Acceptance No. 14-0505.01
Expiration Date March 24, 2019
By Manuel Perez
Miami Dade Product Control

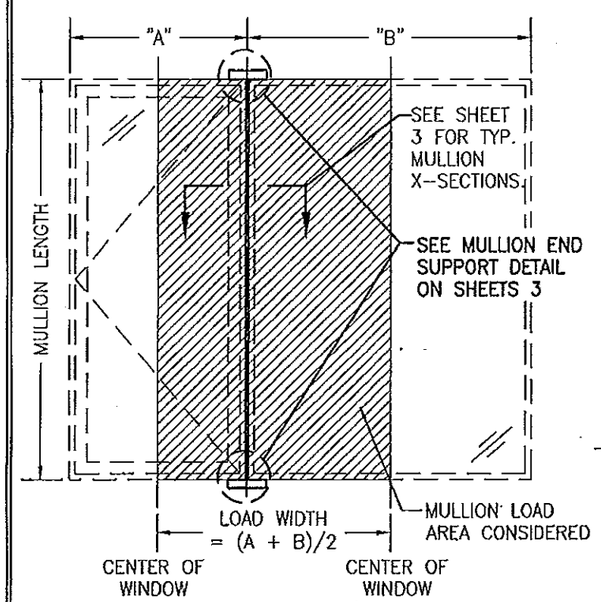

SINGLE OPERABLE DOOR/WINDOW TO A SINGLE OPERABLE OR FIXED DOOR/WINDOW
(SEE LOAD TABLE 5.0)

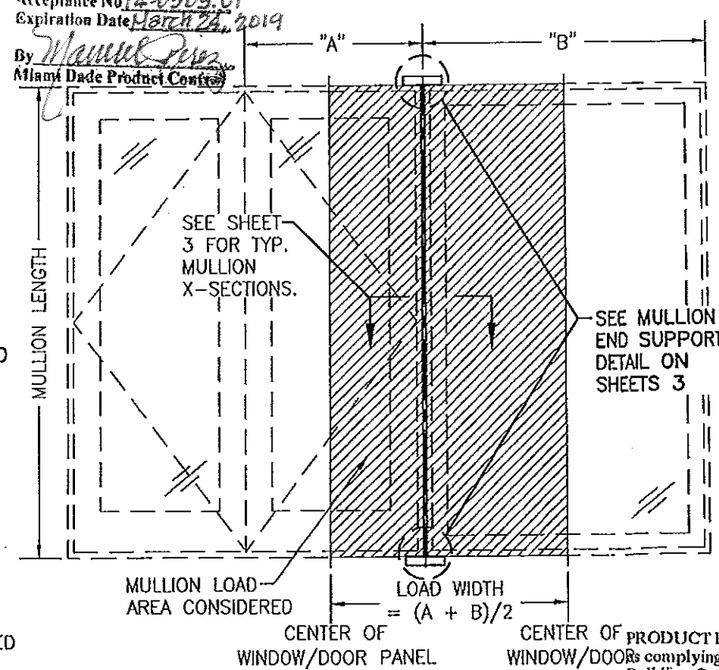

DOUBLE PANEL OPERABLE DOOR/WINDOW TO A SINGLE DOOR OR FIXED SIDELIGHT
(SEE LOAD TABLE 5.0)
NOTE: DOORS & WINDOWS MAY BE EITHER SWING OR SLIDING.

PRODUCT REVISED
as complying with the Florida Building Code
Acceptance No. 11-1026.13
Expiration Date Mar. 28, 2019
By Manuel Perez
Miami Dade Product Control

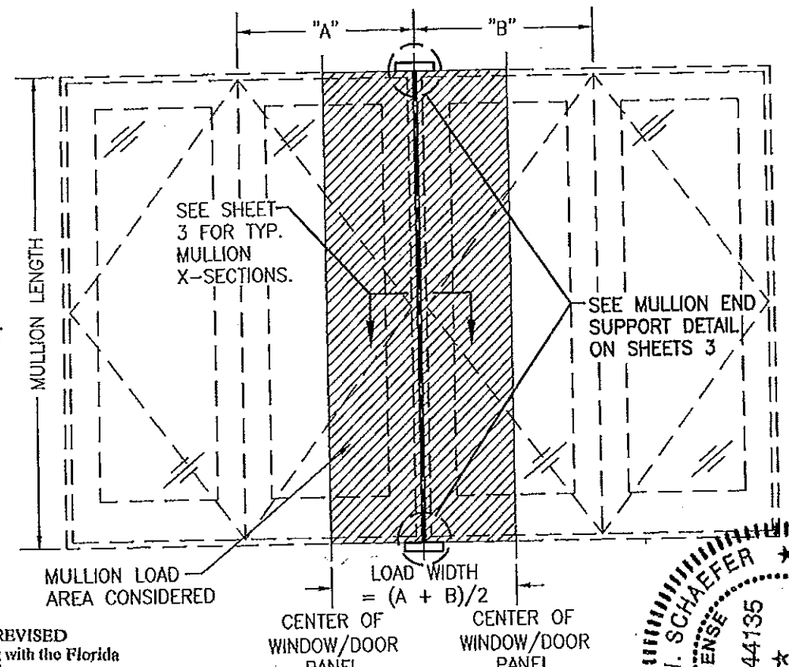

DOUBLE PANEL OPERABLE DOOR/WINDOW TO A DOUBLE PANEL OPERABLE DOOR/WINDOW
(SEE LOAD TABLE 5.0)
NOTE: DOORS & WINDOWS MAY BE EITHER SWING OR SLIDING.

WARREN W. SCHAEFER LICENSE No. 44135 STATE OF FLORIDA PROFESSIONAL ENGINEER

DRAWN BY: K.P.S.	CHECKED BY: W.W.S.
PLOT: 1=24	DATE: 09/14/04

NO.	REVISION DESCRIPTION	BY	DATE

MANUFACTURER: PELLA CORPORATION, 102 MAIN STREET, PELLA, IA 50219, 641-621-1000

DRAWING TITLE: PLATE MULLION

CONSULTANTS: W. W. SCHAEFER ENGINEERING & CONSULTING, P.A. (CA 6809), 7480 150TH COURT NORTH, PALM BEACH GARDENS, FL 33418, PHONE 561-744-3424

DATE: OCT 21 2011

WARREN W. SCHAEFER, P.E. P.E. NO. 44135

DRAWING NO. 1252 | REV. A

SHEET NO. 2 OF 4

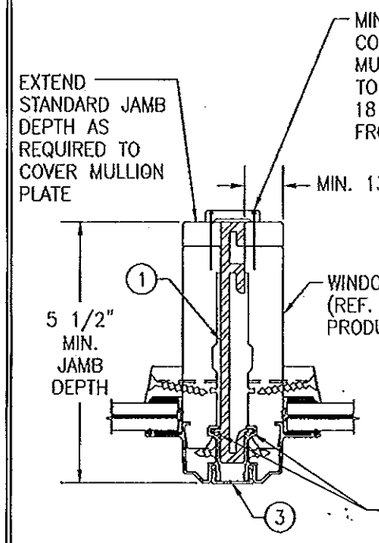

MULLION "A"

(WITHOUT S.S. BAR REINFORCEMENT)

DIRECT GLAZED WINDOW FRAMES SHOWN. OTHER PRODUCT APPROVED PELLA ALUMINUM CLAD WOOD PRODUCT FRAMES ALSO APPLICABLE PROVIDING FRAME CROSS SECTION SIZES ARE EQUAL TO OR GREATER THAN THOSE SHOWN

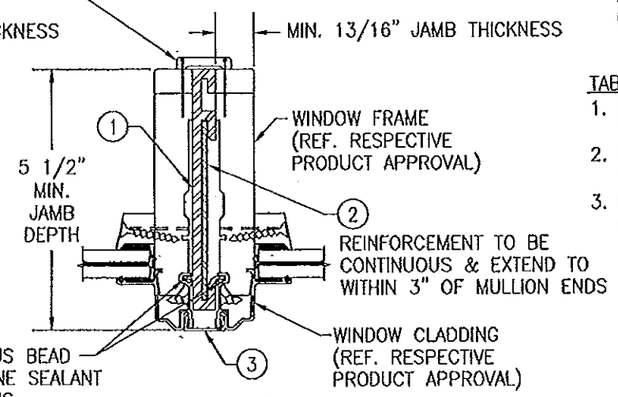

MULLION "B"

(WITH S.S. BAR REINFORCEMENT)

DIRECT GLAZED WINDOW FRAMES SHOWN. OTHER PRODUCT APPROVED PELLA ALUMINUM CLAD WOOD PRODUCT FRAMES ALSO APPLICABLE PROVIDING FRAME CROSS SECTION SIZES ARE EQUAL TO OR GREATER THAN THOSE SHOWN

INSTRUCTIONS FOR TABLE USE:

1. DETERMINE REQUIRED WIND PRESSURE FOR THE OPENING.
2. DETERMINE THE MULLION LENGTH & LOAD WIDTH USING THE APPLICABLE ELEVATION ON SHEETS 1 & 2.
3. FIND ALLOWABLE PRESSURE UNDER APPLICABLE MULLION TYPE.
4. MULLION "A" = NON-REINFORCED PLATE MULLION (SEE MULLION CROSS SECTIONS ON SHEET 3)
   MULLION "B" = BAR REINFORCED PLATE MULLION (SEE MULLION CROSS SECTIONS ON SHEET 3)

TABLE NOTES:

1. INDIVIDUAL UNIT SIZES & SHUTTER REQUIREMENTS ARE LIMITED BY THEIR OWN INDIVIDUAL "CERTIFICATION".
2. IN ORDER TO SIMPLIFY TABLES, TABLE PRESSURES ARE LIMITED TO 100 PSF.
3. MULLION LOAD DURATION STRESS INCREASE HAS NOT BEEN CONSIDERED IN THE CALCULATION OF THESE PRESSURES.

LOAD TABLE 1.0

MAXIMUM MULLION LENGTH (IN.)	MAXIMUM LOAD WIDTH (IN.)	ALLOWABLE PRESSURE (PSF) MULLION "A"	ALLOWABLE PRESSURE (PSF) MULLION "B"
72	72	83.2	100.0
	66	90.8	100.0
	60	99.9	100.0
78	72	70.9	94.5
	66	77.3	100.0
	60	85.1	100.0
	54	94.5	100.0
	48	100.0	100.0
84	72	61.1	75.7
	66	66.7	82.6
	60	73.4	90.8
	54	81.5	100.0
	48	91.7	100.0
	42	100.0	100.0
90	72	53.3	61.5
	66	58.1	67.1
	60	63.9	73.9
	54	71.0	82.1
	48	79.9	92.3
	42	91.3	100.0
	36	100.0	100.0
96	72	46.8	50.7
	66	51.1	55.3
	60	56.2	60.9
	54	62.4	67.6
	48	70.2	76.1
	42	80.2	86.9
	36	93.6	100.0
	30	100.0	100.0
108	72	35.5	35.6
	66	38.7	38.9
	60	42.6	42.7
	54	47.3	47.5
	48	53.3	53.4
	42	60.9	61.1
	36	71.0	71.2
	30	85.2	85.5
	24	100.0	100.0
120	72	–	26.0
	66	28.2	28.3
	60	31.1	31.2
	54	34.5	34.6
	48	38.8	38.9
	42	44.4	44.5
	36	51.8	51.9
	30	62.1	62.3
	24	77.6	77.9

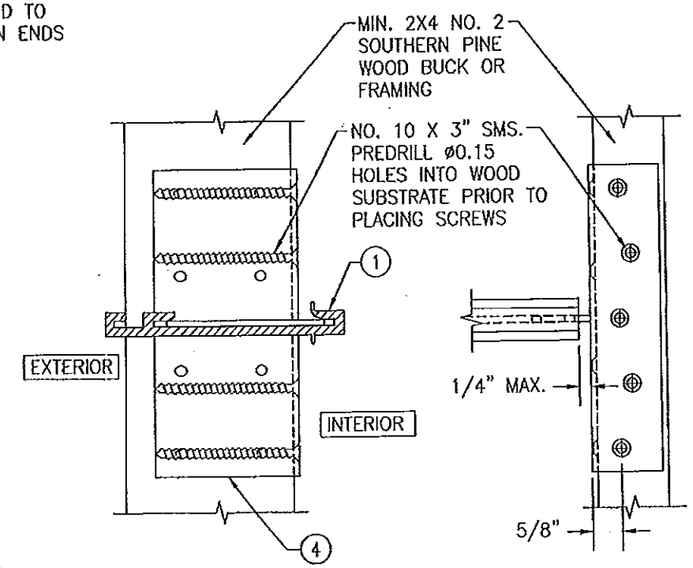

TYPICAL MULLION END SUPPORT

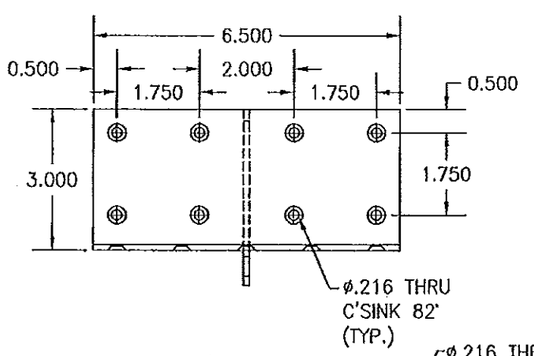

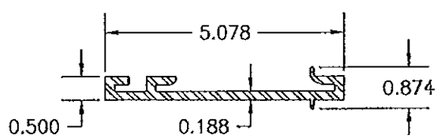

1 PLATE MULLION
6061-T6 ALUMINUM

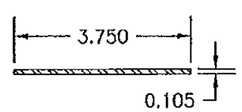

2 BAR REINFORCEMENT
304 STAINLESS STEEL

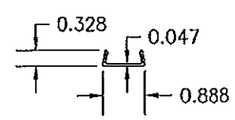

3 EXTERIOR MULLION COVER
6063-T5 ALUMINUM

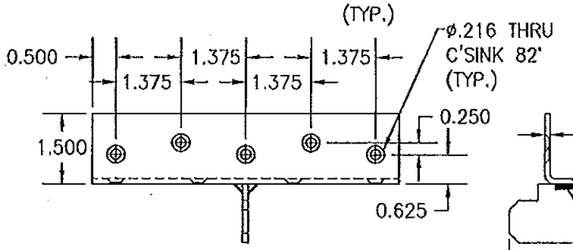

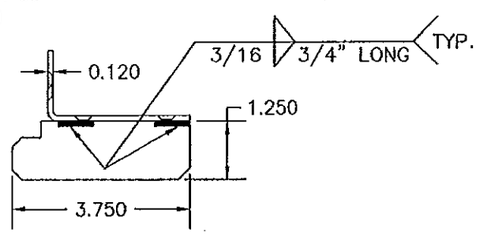

4 MULLION END CLIP
316L STAINLESS STEEL

PRODUCT RENEWED
as complying with the Florida Building Code
Acceptance No 14-0505.01
Expiration Date March 21, 2019
By Manuel Perez
Miami-Dade Product Control

PRODUCT REVISED
as complying with the Florida Building Code
Acceptance No 11-1026.13
Expiration Date March 24, 2015
By Manuel Perez
Miami-Dade Product Control

WARREN W. SCHAEFER LICENSE No. 44135 STATE OF FLORIDA PROFESSIONAL ENGINEER

DRAWN BY: K.P.S.	CHECKED BY: W.W.S.
PLOT: 1=3	DATE: 09/14/04

NO.	REVISION DESCRIPTION	BY	DATE

PELLA CORPORATION
102 MAIN STREET
PELLA, IA 50219
641-621-1000

MANUFACTURER

DRAWING TITLE: PLATE MULLION

CONSULTANTS
W. W. SCHAEFER ENGINEERING & CONSULTING, P.A. (CA 6809)
7480 150TH COURT NORTH
PALM BEACH GARDENS, FL 33418
PHONE: 561-744-3424

CERTIFICATION
OCT 21 2011
WARREN W. SCHAEFER, P.E. P.E. NO. 44135

DRAWING NO. 1252 REV. A
SHEET NO. 3 OF 4

LOAD TABLE 2.0

MAXIMUM MULLION LENGTH (IN.)	MAXIMUM LOAD WIDTH (IN.)	ALLOWABLE PRESSURE (PSF) MULLION "A"	ALLOWABLE PRESSURE (PSF) MULLION "B"
60	84	100.0	100.0
66	84	84.9	93.5
	78	91.4	100.0
	72	99.0	100.0
	66	100.0	100.0
72	84	71.3	85.7
	78	76.8	92.3
	72	83.2	100.0
	66	90.8	100.0
	60	99.9	100.0
78	84	60.8	79.1
	78	65.4	85.2
	72	70.9	92.3
	66	77.3	100.0
	60	85.1	100.0
	54	94.5	100.0
	48	100.0	100.0
84	84	52.4	64.9
	78	56.4	69.9
	72	61.1	75.7
	66	66.7	82.6
	60	73.4	90.8
	54	81.5	100.0
	48	91.7	100.0
	42	100.0	100.0
90	84	45.6	52.8
	78	49.2	56.8
	72	53.3	61.5
	66	58.1	67.1
	60	63.9	73.9
	54	71.0	82.1
	48	79.9	92.3
	42	91.3	100.0
	36	100.0	100.0
96	84	40.1	43.5
	78	43.2	46.8
	72	46.8	50.7
	66	51.1	55.3
	60	56.2	60.9
	54	62.4	67.6
	48	70.2	76.1
	42	80.2	86.9
	36	93.6	100.0
	30	100.0	100.0

TABLE NOTES:

1. INDIVIDUAL UNIT SIZES & SHUTTER REQUIREMENTS ARE LIMITED BY THEIR OWN INDIVIDUAL "CERTIFICATION".
2. IN ORDER TO SIMPLIFY TABLES, TABLE PRESSURES ARE LIMITED TO 100 PSF.
3. MULLION 1/3 STRESS INCREASE HAS NOT BEEN CONSIDERED IN THE CALCULATION OF THESE PRESSURES.

LOAD TABLE 3.0

MAXIMUM MULLION LENGTH (IN.)	MAXIMUM LOAD WIDTH (IN.)	ALLOWABLE PRESSURE (PSF) MULLION "A"	ALLOWABLE PRESSURE (PSF) MULLION "B"
60	84	100.0	100.0
66	84	84.9	93.5
	78	91.4	100.0
	72	99.0	100.0
	66	100.0	100.0
72	84	71.3	85.7
	78	76.8	92.3
	72	83.2	100.0
	66	90.8	100.0
	60	99.9	100.0
78	84	57.7	79.1
	78	62.1	85.2
	72	67.3	92.3
	66	73.4	100.0
	60	80.7	100.0
	54	89.7	100.0
	48	100.0	100.0
84	84	46.2	64.9
	78	49.7	69.9
	72	53.9	75.7
	66	58.8	82.6
	60	64.7	90.8
	54	71.8	100.0
	48	80.8	100.0
	42	92.4	100.0
	36	100.0	100.0
90	84	37.5	52.8
	72	43.8	61.5
	66	47.8	67.1
	60	52.6	73.9
	54	58.4	82.1
	48	65.7	92.3
	42	75.1	100.0
	36	87.6	100.0
96	84	30.9	43.5
	72	36.1	50.7
	66	39.4	55.3
	60	43.3	60.9
	54	48.1	67.6
	48	54.1	76.1
	42	61.9	86.9
	36	72.2	100.0
108	84	25.3	30.5
	72	25.3	35.6
	66	27.7	38.9
	60	30.4	42.7
	54	33.8	47.5
	48	38.0	53.4
	42	43.5	61.1
	36	50.7	71.2
120	66	27.7	28.3
	60	27.7	31.2
	54	31.7	34.6
	48	27.7	38.9
	42	31.7	44.5
	36	37.0	51.9

LOAD TABLE 4.0

MAXIMUM MULLION LENGTH (IN.)	MAXIMUM LOAD WIDTH (IN.)	ALLOWABLE PRESSURE (PSF) MULLION "A"	ALLOWABLE PRESSURE (PSF) MULLION "B"
48	72	100.0	100.0
54	72	93.3	93.3
	66	100.0	100.0
60	84	72.0	72.0
	78	77.5	77.5
	72	84.0	84.0
	66	91.6	91.6
	60	100.0	100.0
66	84	65.5	65.5
	78	70.5	70.5
	72	76.4	76.4
	66	83.3	83.3
	60	91.6	91.6
	54	100.0	100.0
72	90	56.0	56.0
	84	60.0	60.0
	78	64.6	64.6
	72	70.0	70.0
	66	76.4	76.4
	60	84.0	84.0
	54	93.3	93.3
	48	100.0	100.0
78	90	51.7	51.7
	84	55.4	55.4
	78	59.6	59.6
	72	64.6	64.6
	66	70.5	70.5
	60	77.5	77.5
	54	86.2	86.2
	48	96.9	96.9
	42	100.0	100.0
84	90	43.1	48.0
	84	46.2	51.4
	78	49.7	55.4
	72	53.9	60.0
	66	58.8	65.5
	60	64.7	72.0
	54	71.8	80.0
	48	80.8	90.0
	42	92.4	100.0
	36	100.0	100.0
90	90	35.0	44.8
	84	37.5	48.0
	78	40.4	51.7
	72	43.8	56.0
	66	47.8	61.1
	60	52.6	67.2
90	54	58.4	74.7
	48	65.7	84.0
	42	75.1	96.0
	36	87.6	100.0
	30	100.0	100.0
96	90	28.9	40.6
	84	30.9	43.5
	78	33.3	46.8
	72	36.1	50.7
	66	39.4	55.3
	60	43.3	60.9
	54	48.1	67.6
	48	54.1	76.1
	42	61.9	86.9
	36	72.2	100.0
	30	86.6	100.0
	24	100.0	100.0
108	90	–	28.5
	84	–	30.5
	78	–	32.9
	72	–	35.6
	66	27.7	38.9
	60	30.4	42.7
	54	33.8	47.5
	48	38.0	53.4
	42	43.5	61.1
	36	50.7	71.2
	30	60.8	85.5
	24	76.0	100.0
120	66	–	28.3
	60	–	31.2
	54	–	34.6
	48	27.7	38.9
	42	31.7	44.5
	36	37.0	51.9
	30	44.4	62.3
	24	55.4	77.9
132	48	–	29.3
	42	–	33.4
	36	–	39.0
	30	–	46.8
	24	–	58.5
144	42	–	25.8
	36	–	30.1
	30	–	36.1
	24	–	45.1

INSTRUCTIONS FOR TABLE USE:

1. DETERMINE REQUIRED WIND PRESSURE FOR THE OPENING.
2. DETERMINE THE MULLION LENGTH & LOAD WIDTH USING THE APPLICABLE ELEVATION ON SHEETS 1 & 2.
3. FIND ALLOWABLE PRESSURE UNDER APPLICABLE MULLION TYPE.
   MULLION "A" = NON-REINFORCED PLATE MULLION (SEE MULLION CROSS SECTIONS ON SHEET 3)
   MULLION "B" = BAR REINFORCED PLATE MULLION (SEE MULLION CROSS SECTIONS ON SHEET 3)

LOAD TABLE 5.0

MAXIMUM MULLION LENGTH (IN.)	MAXIMUM LOAD WIDTH (IN.)	ALLOWABLE PRESSURE (PSF) MULLION "A"	ALLOWABLE PRESSURE (PSF) MULLION "B"
60	60	100.0	100.0
66	60	91.6	91.6
	54	100.0	100.0
72	60	84.0	84.0
	54	93.3	93.3
	48	100.0	100.0
78	60	77.5	77.5
	54	86.2	86.2
	48	96.9	96.9
	42	100.0	100.0
84	60	72.0	72.0
	54	80.0	80.0
	48	90.0	90.0
	42	100.0	100.0
90	60	63.9	67.2
	54	71.0	74.7
	48	79.9	84.0
	42	91.3	96.0
	36	100.0	100.0
96	60	56.2	60.9
	54	62.4	67.6
	48	70.2	76.1
	42	80.2	86.9
	36	93.6	100.0
	30	100.0	100.0
108	60	42.6	42.7
	54	47.3	47.5
	48	53.3	53.4
	42	60.9	61.1
	36	71.0	71.2
	30	85.2	85.5
	24	100.0	100.0
120	60	31.1	31.2
	54	34.5	34.6
	48	38.8	38.9
	42	44.4	44.5
	36	51.8	51.9
	30	62.1	62.3
	24	77.6	77.9

PRODUCT RENEWED
as complying with the Florida Building Code
Acceptance No 14-0505.01
Expiration Date March 24, 2015
By Manuel Perez
Miami Dade Product Control

PRODUCT REVISED
as complying with the Florida Building Code
Acceptance No 11-1026.13
Expiration Date March 24, 2015
By Manuel Perez
Miami Dade Product Control

WARREN W. SCHAEFER LICENSE No. 44135 STATE OF FLORIDA PROFESSIONAL ENGINEER

DRAWN BY: K.P.S.	CHECKED BY: W.W.S.
PLOT: 1=1	DATE: 09/14/04

NO.	REVISION DESCRIPTION	BY	DATE

PELLA CORPORATION
102 MAIN STREET
PELLA, IA 50219
641-621-1000
MANUFACTURER

CONSULTANTS
W. W. SCHAEFER ENGINEERING & CONSULTING, P.A. (CA 6809)
7460 150TH COURT NORTH
PALM BEACH GARDENS, FL 33418
PHONE: 561-744-3424

DRAWING TITLE: PLATE MULLION

CERTIFICATION: OCT 31 2011

WARREN W. SCHAEFER, P.E.
P.E. NO. 44135

DRAWING NO. 1252 REV. A

SHEET NO. 4 OF 4