MIAMI-DADE COUNTY
PRODUCT CONTROL SECTION
11805 SW 26 Street, Room 208
Miami, Florida 33175-2474
T (786) 315-2590 F (786) 315-2599
www.miamidade.gov/economy

DEPARTMENT OF REGULATORY AND ECONOMIC RESOURCES (RER)
BOARD AND CODE ADMINISTRATION DIVISION

NOTICE OF ACCEPTANCE (NOA)

Weather Shield Manufacturing Inc.
One Weather Shield Plaza
Medford, WI 54451-0309

SCOPE:

This NOA is being issued under the applicable rules and regulations governing the use of construction materials. The documentation submitted has been reviewed and accepted by Miami-Dade County RER -Product Control Section to be used in Miami Dade County and other areas where allowed by the Authority Having Jurisdiction (AHJ).

This NOA shall not be valid after the expiration date stated below. The Miami-Dade County Product Control Section (In Miami Dade County) and/or the AHJ (in areas other than Miami Dade County) reserve the right to have this product or material tested for quality assurance purposes. If this product or material fails to perform in the accepted manner, the manufacturer will incur the expense of such testing and the AHJ may immediately revoke, modify, or suspend the use of such product or material within their jurisdiction. RER reserves the right to revoke this acceptance, if it is determined by Miami-Dade County Product Control Section that this product or material fails to meet the requirements of the applicable building code.

This product is approved as described herein, and has been designed to comply with the Florida Building Code, including the High Velocity Hurricane Zone.

DESCRIPTION: Series "1604" Outswing Alum Clad Wood Doors -LMI

APPROVAL DOCUMENT: Drawing No. **1568 Rev A**, titled "1604 Aluminum Clad Outswing Impact Door", sheets 1 through 15 of 15, dated 04/30/09 and last revised on APR 16, 2014, prepared by W. W. Schaefer Engineering & Consulting, P.A., signed and sealed by Warren W. Schaefer, P.E., bearing the Miami-Dade County Product Control Revision stamp with the Notice of Acceptance number and expiration date by the Miami-Dade County Product Control Section.

MISSILE IMPACT RATING: Large and Small Missile Impact Resistant

Limitations:

1. Weather Shield Transom Windows under separate approval. Refer to sheets 6 and 7 of this drawings set, for max frame width, height and applicable design pressure.
2. Maximum O.C. spacing between hinges not to exceed 26".
3. Min 2 x 6 deep wood buck required.

LABELING: Each unit shall bear a permanent label with the manufacturer's name or logo, city, state and series and following statement: "Miami-Dade County Product Control Approved", noted herein.

RENEWAL of this NOA shall be considered after a renewal application has been filed and there has been no change in the applicable building code negatively affecting the performance of this product.

TERMINATION of this NOA will occur after the expiration date or if there has been a revision or change in the materials, use, and/or manufacture of the product or process. Misuse of this NOA as an endorsement of any product, for sales, advertising or any other purposes shall automatically terminate this NOA. Failure to comply with any section of this NOA shall be cause for termination and removal of NOA.

ADVERTISEMENT: The NOA number preceded by the words Miami-Dade County, Florida, and followed by the expiration date may be displayed in advertising literature. If any portion of the NOA is displayed, then it shall be done in its entirety.

INSPECTION: A copy of this entire NOA shall be provided to the user by the manufacturer or its distributors and shall be available for inspection at the job site at the request of the Building Official.

This NOA **revises & renews NOA # 11-1108.12** and consists of this page 1 and evidence pages E-1 & E-2, as well as approval document mentioned above.

The submitted documentation was reviewed by **Ishaq I. Chanda, P.E**

MIAMI-DADE COUNTY APPROVED

9/15/14

Weather Shield Manufacturing Inc.

NOTICE OF ACCEPTANCE: EVIDENCE SUBMITTED

A. DRAWINGS

1. Manufacturer's die drawings and sections (Submitted under files **#11-1108.12/# 09-0901.09**)
2. Drawing No. **1568 Rev A**, titled "1604 Aluminum Clad Outswing Impact Door", sheets 1 through 15 of 15, dated 04/30/09 and last revised on APR 16, 2014, prepared by W. W. Schaefer Engineering & Consulting, P.A., signed and sealed by Warren W. Schaefer, P.E.

B. TESTS (Submitted under files **#11-1108.12/# 09-0901.09**)

1. Test reports on 1) Air Infiltration Test, per FBC, TAS 202-94
   2) Uniform Load Static Air Pressure Test, per FBC, TAS 202-94
   3) Water Resistance Test, per FBC, TAS 202-94
   4) Large Missile Impact Test per FBC, TAS 201-94
   5) Cyclic Wind Pressure Loading per FBC, TAS 203-94

along with marked-up drawings and installation diagram of Wood alum clad doors and Wood doors w/ sidelite and / or transom window, prepared by Stork Twin City Testing, Corp., Test Report s No(s) : **180-7762.1, .2, .3, .4 &.5**, dated 06/10/09, includes addendum letter dated Jan 19, 2010, all signed and sealed by Thomas A. Kolden, P.E.

C. CALCULATIONS

1. Anchor verification calculations dated APR 16, 2014 per FBC 2014 per NDS 2012, prepared by W. W. Schaefer Engineering & Consulting, P.A., signed & sealed by Warren W. Schaefer, P.E.
2. Anchor verification calculations per FBC 2007 dated 08-25-09 and per FBC 2010 dated Nov 02, 2011, prepared by W. W. Schaefer Engineering & Consulting, P.A., signed and sealed by Warren W. Schaefer, P.E. (Submitted under files **#11-1108.12/# 09-0901.09**)
3. Glazing complies with ASTME-1300-02, 04 & -09.

D. QUALITY ASSURANCE

1. Miami Dade Department of Regulatory and Economic Resources (RER).

E. MATERIAL CERTIFICATIONS

1. Notice of Acceptance No. **12-1231.09** issued to Eastman Chemical Co (MA) former Solutia Inc. for "**Saflex Clear or colored interlayer**", expiring on May 21, 2016.
2. ICC report ESR-1387 dated FEB 01, 2012, for Microllam LVL, issued to Weyerhaeuser.
3. Reference Expired Notice of Acceptance No. **08-0814.08** issued to Weyerhaeuser. for their "**Microllam Laminated Veneer Lumber (LVL)**".

F. STATEMENTS

1. Statement letter of conformance to FBC 2014(**5th Edition**) and letter of no financial interest, prepared by W. W. Schaefer Engineering & Consulting, P.A., dated April 16, 2014, signed and sealed by Warren W. Schaefer, P.E.

Ishaq I. Chanda

Ishaq I. Chanda, P.E.
Product Control Examiner
NOA No. 14-0513.05
Expiration Date: March 10, 2020
Approval Date: September 13, 2014

NOTICE OF ACCEPTANCE: EVIDENCE SUBMITTED

F. STATEMENTS (continue):

2. Statement letter, prepared by W. W. Schaefer Engineering & Consulting, P.A. dated April 16, 2014, of NOA Drawings and calculation have been reviewed to 2014 FBC and found compliant and that No change to existing NOA documents are required, other than addition of Crete flex con screw and updating glass interlayer, signed by Warren W. Schaefer, P.E.
3. Statement letters of conformance to FBC 2010, dated NOV 02, 2011, prepared by W. W. Schafer Engineering & Consulting, P. A., signed and sealed by Warren W. Schafer, P.E. (submitted under file **#11-1108.12**).
4. Statement letters of conformance to FBC 2007, dated 08-25-09, prepared by W. W. Schafer Engineering & Consulting, P. A., signed and sealed by Warren W. Schafer, P.E. (submitted under file **#09-0901.09).**
5. Statement request dated April 24, 2014, issued by Weather Sheild windows & Doors, for renewal with No change, signed by Dale, Turzinski.
6. Lab compliance statements as a part of the above test reports.
7. Addendum letter dated January 19, 2010, issued by Stork Twin City, signed & sealed by Tom Kolden, P.E.

G. OTHER

1. This NOA **revises & renews NOA # 11-1108.12**, expired on March 10, 2020.
2. Test proposal # **07-3820** dated 12/12/07, approved by BCCO.

Ishaq I. Chanda

Ishaq I. Chanda, P.E.
Product Control Examiner
NOA No. 14-0513.05
Expiration Date: March 10, 2020
Approval Date: September 13, 2014

GENERAL NOTES:

1. THESE DOOR SYSTEMS HAVE BEEN TESTED, ANALYZED & APPROVED FOR DESIGN PRESSURES NOT TO EXCEED THOSE SHOWN IN THE "ALLOWABLE DESIGN PRESSURE TABLE(S).
2. OPENINGS, BUCKING & BUCKING FASTENERS MUST BE PROPERLY DESIGNED & INSTALLED TO TRANSFER WIND LOADS TO THE STRUCTURE.
3. ALL HARDWARE & FASTENERS SHALL BE IN ACCORDANCE WITH THESE DRAWINGS & SHALL NOT VARY UNLESS SPECIFICALLY MENTIONED ON THE DRAWINGS. SPECIFIED ANCHOR EMBED TO BASE MATERIAL SHALL BE BEYOND WALL FINISH OR STUCCO.
4. THE DETAILS & SPECIFICATIONS SHOWN HEREIN REPRESENT THE PRODUCTS TESTED & PROPOSED FOR WATER, AIR, IMPACT, CYCLIC & UNIFORM STATIC AIR PRESSURE TESTING IN CONFORMANCE WITH THE FLORIDA BUILDING CODE PROTOCALS TAS-201, 202 & 203 FOR LARGE MISSILE IMPACT DOORS.
5. THESE DOOR SYSTEMS HAVE BEEN DESIGNED IN ACCORDANCE WITH AND MEET THE REQUIREMENTS OF THE FLORIDA BUILDING CODE (FBC) INCLUDING HIGH VELOCITY HURRICANE ZONES (HVHZ).
6. IMPACT SHUTTERS ARE NOT REQUIRED WITH THESE DOORS.
7. ALL ANCHORS SECURING DOOR FRAME TO PRESSURE TREATED BUCKS OR WOOD FRAMING SHALL BE CAPABLE OF RESISTING CORROSION CAUSED BY THE PRESSURE TREATING CHEMICALS IN THE WOOD.
8. DETERMINE THE POSITIVE & NEGATIVE DESIGN LOADS TO USE WHEN REFERENCING THESE DOCUMENTS IN ACCORDANCE WITH THE GOVERNING CODE AND GOVERNING WIND VELOCITY. FOR WIND LOAD CALCULATIONS IN ACCORDANCE WITH THE FLORIDA BUILDING CODE, A DIRECTIONALITY FACTOR OF Kd = 0.85 MAY BE APPLIED PER THE ASCE-7 STANDARD.
9. NO INCREASE IN ALLOWABLE STRESS HAS BEEN USED IN THE CERTIFICATION OF THIS PRODUCT. WIND LOAD DURATION FACTOR Cd = 1.6 WAS USED FOR WOOD SCREW ANALYSIS ONLY.
10. MATERIALS, INCLUDING BUT NOT LIMITED TO STEEL SCREWS, THAT COME INTO CONTACT WITH OTHER DISSIMILAR MATERIALS SHALL MEET THE REQUIREMENTS OF FLORIDA BUILDING CODE CHAPTER 20.
11. All WOOD MEMBERS OF DOORS THAT MAY POSSIBLY COME INTO CONTACT WITH MASONRY OR CONCRETE SUBSTRATES, ARE SUBJECT TO MOISTURE &/OR ARE SUBJECT TO THE OUTSIDE ENVIRONMENT SHALL BE OF AN APPROVED DURABLE SPECIES OR BE TREATED IN AN APPROVED METHOD WITH AN APPROVED PRESERVATIVE PER FBC SECTION 2326.

CORNER CONSTRUCTION:

RECTANGULAR & EYEBROW FRAME TOP CORNERS: MEMBERS ARE RABBETED, BUTTED & SECURED WITH (3)THREE NO. 8 X 2 1/2" WOOD SCREWS THROUGH THE VERTICAL MEMBER INTO THE HORIZONTAL MEMBER. CORNERS ARE SEALED WITH SILICONE SEALANT.

ROUND TOP FRAME TOP CORNERS: MEMBERS ARE RABBETED, BUTTED, GLUED & SECURED WITH (2)TWO 5.500" X 1.500 X .040" GALVANIZED PLATES THAT RUN ACROSS THE STILE & RAIL INTERSECTION. THE GALVANIZED PLATES ARE SECURED TO THE STILE & RAIL WITH (12)TWELVE NO. 6 X 5/8" PFH SS SCREWS PER PLATE. CORNERS ARE SEALED WITH GLUE.

BOTTOM FRAME CORNERS: MEMBERS ARE RABBETED, BUTTED & SECURED WITH (4)FOUR NO. 8 X 2 1/2" WOOD SCREWS THROUGH THE VERTICAL MEMBER INTO THE HORIZONTAL MEMBER. CORNERS ARE SEALED WITH SILICONE SEALANT.

RECTANGULAR & EYEBROW PANEL TOP CORNERS: MEMBERS ARE BUTTED TOGETHER, JOINED WITH (2)TWO 3/4"ø X 3" WOOD DOWELS PER CORNER & (1)ONE NO. 8 X 2 1/2" WOOD SCREW THROUGH THE HORIZONTAL MEMBER INTO THE VERTICAL MEMBER. CORNERS ARE SEALED WITH WOOD GLUE THAT SECURES THE DOWELS.

ROUND TOP PANEL TOP CORNERS: MEMBERS ARE BUTTED TOGETHER, JOINED WITH (4)FOUR 3/4"ø X 3" WOOD DOWELS PER SPRINGLINE. CORNERS ARE SEALED WITH WOOD GLUE THAT SECURES THE DOWELS.

PANEL BOTTOM CORNERS: MEMBERS ARE BUTTED TOGETHER, JOINED WITH (3)THREE 3/4"ø X 3" WOOD DOWELS PER CORNER & (1)ONE NO. 8 X 2 1/2" WOOD SCREW THROUGH THE HORIZONTAL MEMBER INTO THE VERTICAL MEMBER. CORNERS ARE SEALED WITH WOOD GLUE THAT SECURES THE DOWELS.

RECTANGULAR & EYEBROW FRAME CLADDING CORNERS: CLADDING IS MITERED TOGETHER & JOINED WITH (1)ONE NO. 6 X 1 1/4" PFH SS SCREW PER CORNER. CORNERS ARE SEALED WITH SILICONE SEALANT.

ROUND TOP FRAME CLADDING CORNERS: CONTINUOUS CLADDING IS SECURED TO THE FRAME.

PANEL CLADDING: CLADDING IS SQUARE CUT & SECURED TO THE SASH. CORNERS ARE SEALED WITH SILICONE SEALANT.

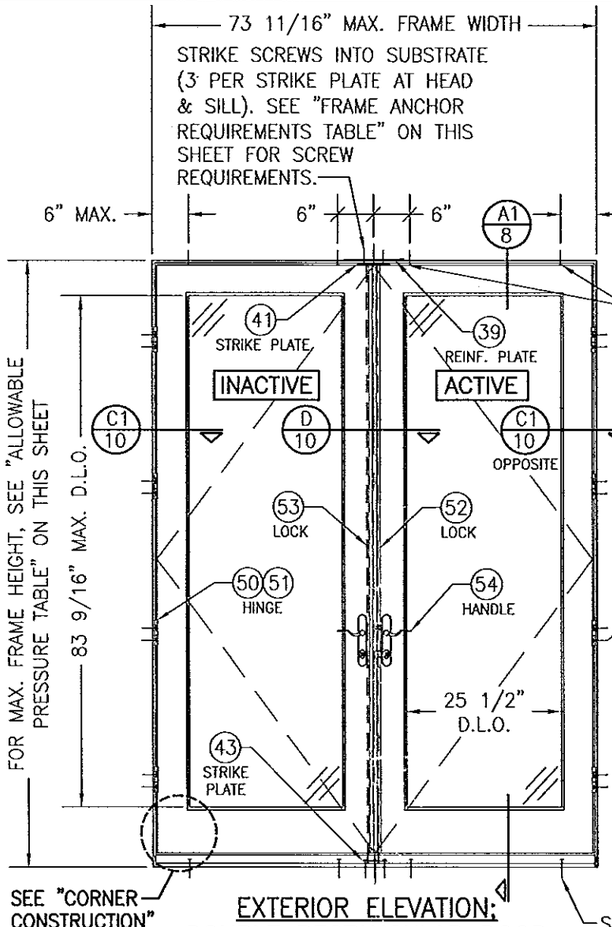

EXTERIOR ELEVATION:
DOUBLE RECTANGULAR DOOR
SCALE: 1/2" = 1'-0"
(FRAME SCREW MOUNT CONDITION)

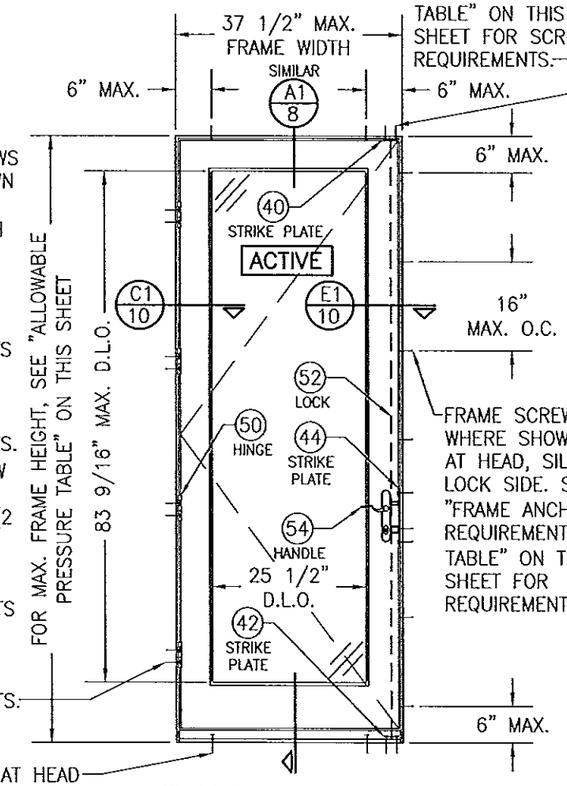

EXTERIOR ELEVATION:
SINGLE RECTANGULAR DOOR
SCALE: 1/2" = 1'-0"
(FRAME SCREW MOUNT CONDITION)

THESE DRAWINGS ARE APPLICABLE ONLY TO THE PRODUCT SPECIFIED. THEY MAY NOT BE USED FOR THE ASSEMBLY AND/OR INSTALLATION OF ANY OTHER PRODUCT NOR MAY THEY BE USED FOR RATIONAL AND/OR LOCAL APPROVAL OF ANY PRODUCT NOT PRODUCED BY THE MANUFACTURER STATED ON THESE DRAWINGS.

PRODUCT REVISED
In complying with the Florida Building Code
Acceptance No 14-0513.05
Expiration Date March 14, 2020
By [signature]
Miami Dade Product Control

FRAME ANCHOR REQUIREMENTS TABLE

OPENING TYPE (SUBSTRATE)	FRAME/HINGE/STRIKE/NAIL FIN TO OPENING FASTENER TYPE	MINIMUM EMBED	MINIMUM EDGE DIST.
FRAME/HINGE/STRIKE SCREWS			
(3) MIN. 2X6 WOOD FRAME OR BUCK (MIN. GR. 3 & G=0.55)	NO. 10 SMS OR WOOD SCREW	1 1/4"	3/4"
MIN. 18 GA. 33 KSI METAL STUD	NO. 10 GR. 5 SELF TAP/DRILL SCREW	FULL	1/2"
MIN. 1/8" THK A36 STEEL	NO. 10 GR. 5 SELF TAP/DRILL SCREW	FULL	1/2"
MIN. 1/8" THK 6063-T5 ALUM.	NO. 10 GR. 5 SELF TAP/DRILL SCREW	FULL	1/2"
(2) C-90 CMU/2500 PSI CONCRETE	(1) 3/16" CONCRETE SCREW (STRIKES & ADJUSTABLE HINGE) (1) 1/4" CONCRETE SCREW (FRAME & BUTT HINGE)	1 1/4" (CMU) & 1 1/2" (CONCRETE)	2"
NAILING FIN FASTENERS			
(3) MIN. 2X6 WOOD FRAME OR BUCK (MIN. GR. 3 & G=0.55)	NO. 8 SMS SCREW	1 3/8"	1/2"
MIN. 1/8" THK A36 STEEL	NO. 8 GR. 5 SELF TAP/DRILL SCREW	FULL	1/2"
MIN. 1/8" THK 6063-T5 ALUM.	NO. 8 GR. 5 SELF TAP/DRILL SCREW	FULL	1/2"

(1) CONCRETE SCREWS SHALL BE ELCO ULTRACONS (C.S.), ELCO CRETE-FLEX (S.S.), ITW RAMSET/RED HEAD TAPCONS (C.S. OR S.S.) OR HILTI KWIK-CON II (C.S OR S.S.).
(2) CMU IS APPLICABLE AT SIDES ONLY (NOT APPLICABLE AT HEAD & SILL)
(3) WOOD BUCKS MAY BE RIPPED DOWN TO 4 1/2" TO MEET JAMB DEPTH

ALLOWABLE DESIGN PRESSURE
(SINGLE & DOUBLE OPERABLE DOORS)

MAX. FRAME WIDTH (IN.)	MAX. FRAME HEIGHT (IN.)	ALLOWABLE PRESSURE POSITIVE (PSF)	ALLOWABLE PRESSURE NEGATIVE (PSF)
DOUBLE DOOR			
73 11/16	99 1/8	65	75
73 11/16	82	65	85
SINGLE DOOR			
37 1/2	99 1/8	65	75
37 1/2	82	65	85

HINGE REQUIREMENTS

4 PER DOOR
(ALL DOOR CONDITIONS)

NO.	REVISION DESCRIPTION	BY	DATE
A1	UPDATE CONSULTANTS ADDRESS	W.R.M.	11/02/11
B1	UPDATE TO CURRENT CODE	W.W.S.	04/18/14

DRAWN BY: W.R.M. | CHECKED BY: W.W.S.
PLOT: 1=24 | DATE: 04/30/09

DRAWING TITLE
1604 ALUMINUM CLAD OUT-SWING IMPACT DOOR

MANUFACTURER
WEATHER SHIELD WINDOWS & DOORS
ONE WEATHER SHIELD PLAZA
MEDFORD, WI 54451
715-748-6555

CONSULTANTS
W. W. SCHAEFER ENGINEERING & CONSULTING, P.A. (CA 6809)
7480 150TH COURT NORTH
PALM BEACH GARDENS, FL. 33418
PHONE: 561-744-3424

CERTIFICATION
APR 16 2014
WARREN W. SCHAEFER, P.E.
P.E. NO. 44135

DRAWING NO. 1568 | REV. B
SHEET NO. 1 OF 15

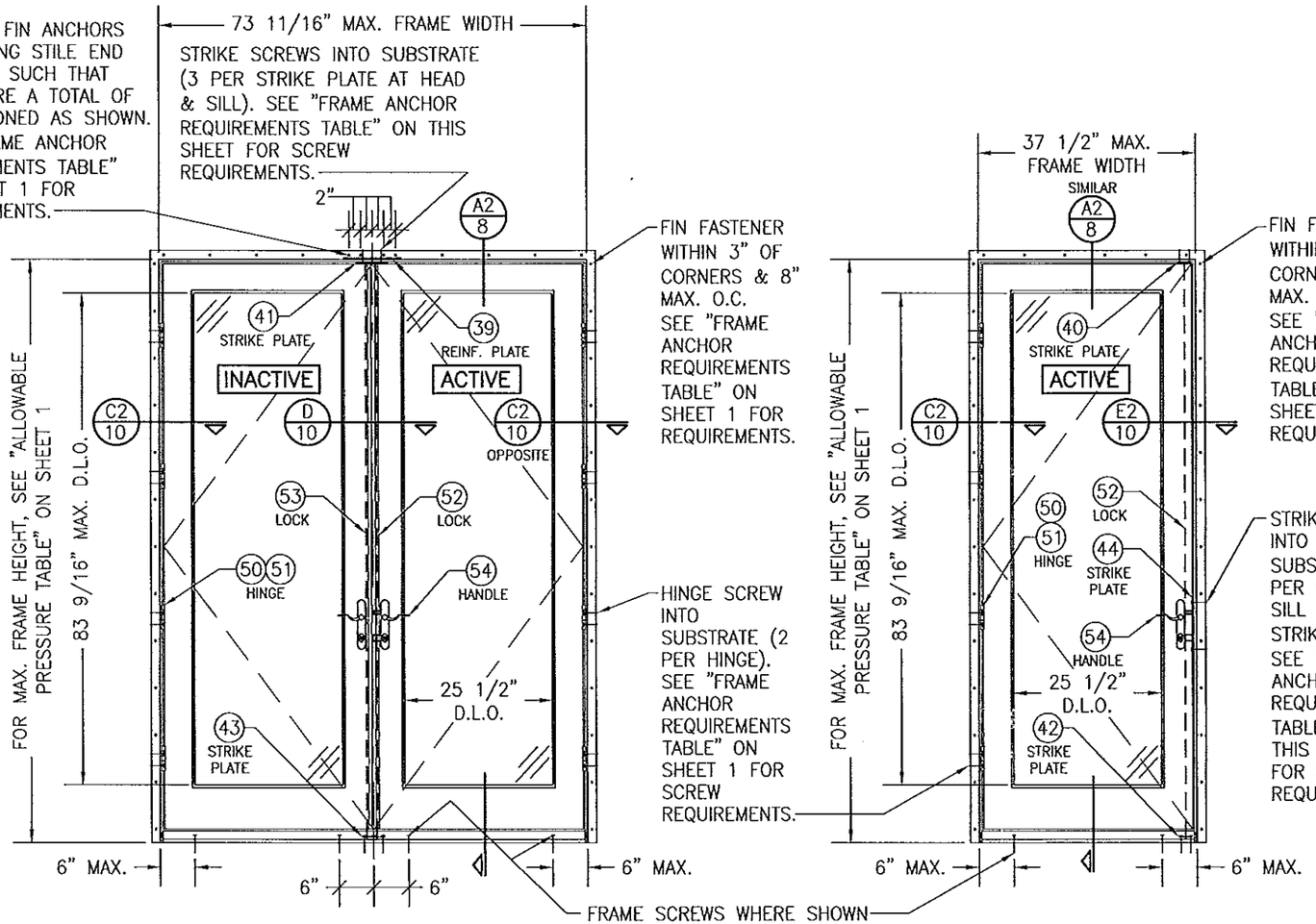

EXTERIOR ELEVATION: DOUBLE RECTANGULAR DOOR

SCALE: 1/2" = 1'-0"
(NAIL FIN MOUNT CONDITION)

EXTERIOR ELEVATION: SINGLE RECTANGULAR DOOR

SCALE: 1/2" = 1'-0"
(NAIL FIN MOUNT CONDITION)

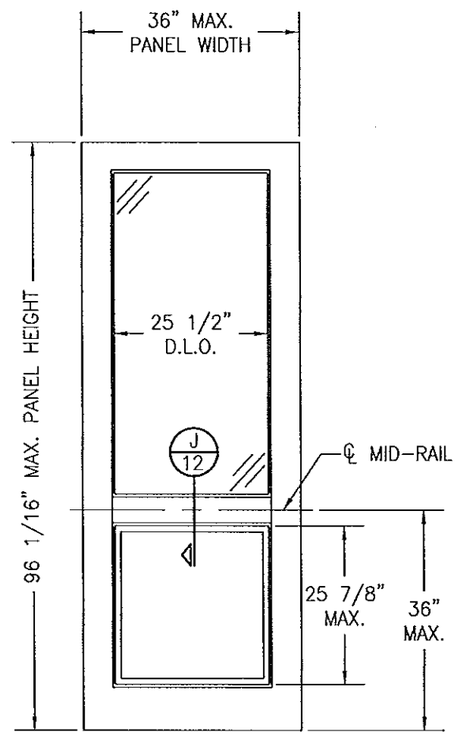

EXTERIOR ELEVATION: PARTIAL RAISED PANEL

SCALE: 1/2"=1'-0"

PANEL NOTES

1) TOP & MID-RAILS MAY BE OF ANY CONFIGURATION PROVIDING THE SMALLEST CROSS SECTION OF RAILS IS EQUAL TO OR LARGER THAN THAT DETAILED IN DRAWINGS.
2) MULTIPLE MID-RAIL (BOTH HORIZONTAL & VERTICAL) MAY BE USED WITH THESE PANELS.
3) PANEL ONLY IS SHOWN. FOR INSTALLATION INTO FRAME, SEE OTHER ELEVATIONS.

ALLOWABLE DESIGN PRESSURE
SEE PRESSURE TABLE ON SHEET 1

PRODUCT REVISED
as complying with the Florida Building Code
Acceptance No. 14-0513.05
Expiration Date 3/10/15
By [signature]
Miami Dade Product Control

APR 16 2014
WARREN W. SCHAEFER, P.E.
P.E. NO. 44135

NO.	REVISION DESCRIPTION	BY	DATE

DRAWN BY: W.R.M. | CHECKED BY: W.W.S.
PLOT: 1=24 | DATE: 04/30/09

DRAWING TITLE
1604 ALUMINUM CLAD OUT-SWING IMPACT DOOR

MANUFACTURER
WEATHER SHIELD WINDOWS & DOORS
ONE WEATHER SHIELD PLAZA
MEDFORD, WI 54451
715-748-6555

CONSULTANTS
W. W. SCHAEFER ENGINEERING & CONSULTING, P.A. (CA 6809)
7480 150TH COURT NORTH
PALM BEACH GARDENS, FL 33418
PHONE: 561-744-3424

CERTIFICATION

DRAWING NO. 1568 | REV. B
SHEET NO. 2 OF 15

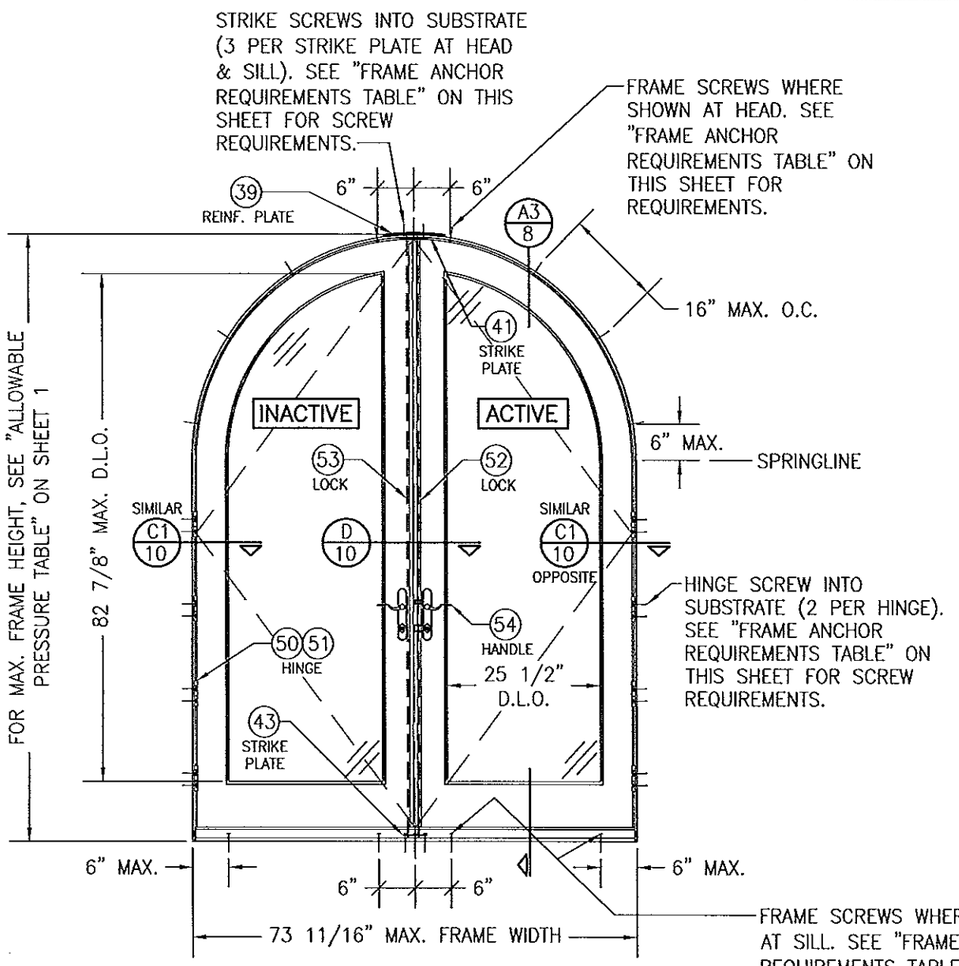

EXTERIOR ELEVATION: DOUBLE HALF ROUND DOOR

SCALE: 1/2" = 1'-0"
(FRAME SCREW MOUNT CONDITION)

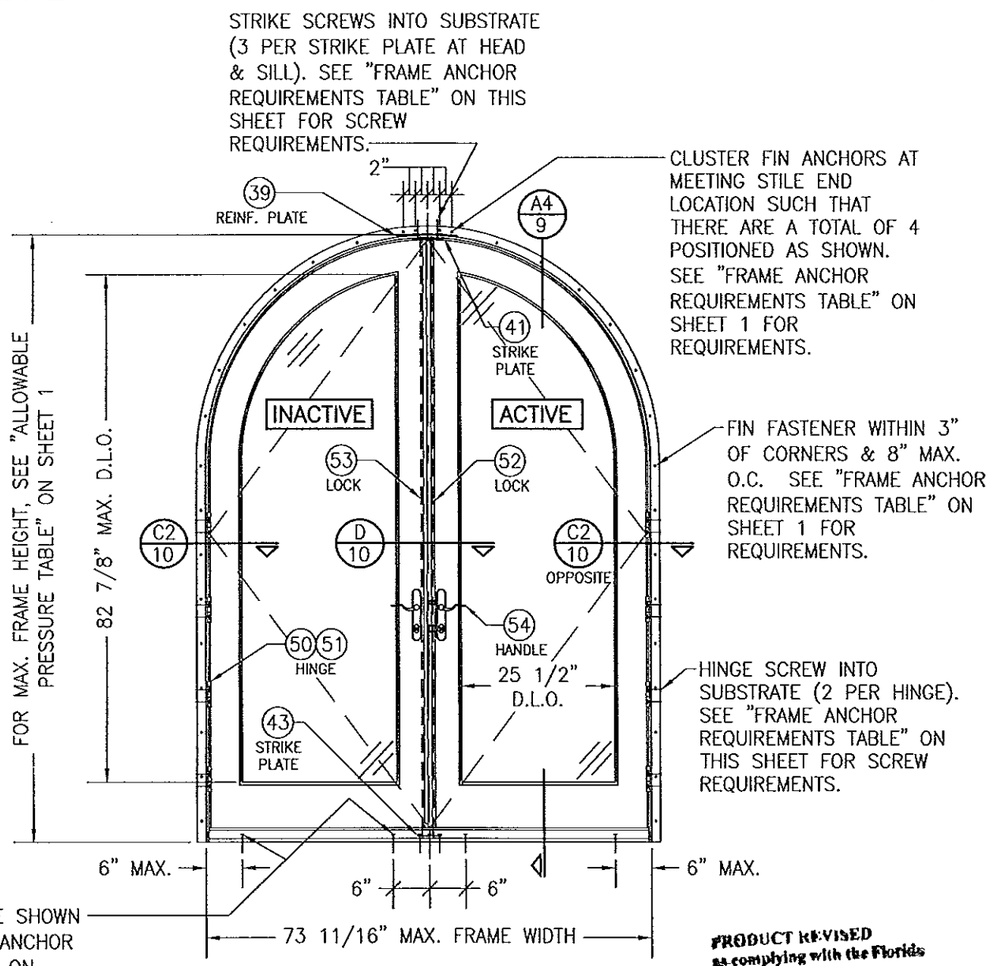

EXTERIOR ELEVATION: DOUBLE HALF ROUND DOOR

SCALE: 1/2" = 1'-0"
(NAIL FIN MOUNT CONDITION)

PRODUCT REVISED as complying with the Florida Building Code
Acceptance No. 14-0528.05
Expiration Date 3/10/20
By Ishaan L. Chand
Miami Dade Product Control

ALLOWABLE DESIGN PRESSURE
SEE PRESSURE TABLE ON SHEET 1

APPROVED SHAPES
DOUBLE DOORS
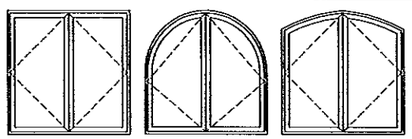
ANCHOR NOTE: RECTANGULAR & HALF ROUND DOORS SHALL BE ANCHORED PER ELEVATIONS. EYEBROW TOP DOORS SHALL HAVE ANCHORS AT THE HEAD EQUIVALENT TO THE HALF ROUND WHEN FRAME SCREW MOUNTED (SPACED 16" MAX. O.C. ALONG THE RADIUS).

APPROVED SHAPES
SINGLE DOORS
RECTANGULAR ONLY APPLIES

APPROVED SHAPES
SINGLE FIXED PANEL DOORS
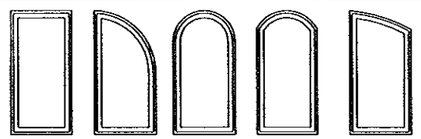
ANCHOR NOTE: SHAPED DOORS SHALL BE ANCHORED AS DETAILED WITH THE RECTANGULAR DOOR ELEVATIONS ON SHEET 4 EXCEPT THAT WHEN FRAME SCREW MOUNTED, THE SHAPED HEADS SHALL HAVE SCREWS PLACED WITHIN 6" OF CORNERS/SPRINGLINE & SPACED 16" MAX. O.C. AROUND THE RADIUS.

DRAWN BY: W.R.M. | CHECKED BY: W.W.S.
PLOT: 1=24 | DATE: 04/30/09

NO.	REVISION DESCRIPTION	BY	DATE

DRAWING TITLE
1604 ALUMINUM CLAD OUT-SWING IMPACT DOOR

MANUFACTURER
WEATHER SHIELD WINDOWS & DOORS
ONE WEATHER SHIELD PLAZA
MEDFORD, WI 54451
715-748-6555

CONSULTANTS
W. W. SCHAEFER ENGINEERING & CONSULTING, P.A. (CA 6809)
7480 150TH COURT NORTH
PALM BEACH GARDENS, FL 33418
PHONE: 561-744-3424

CERTIFICATION
APR 16 2014
WARREN W. SCHAEFER, P.E.
P.E. NO. 44135

DRAWING NO. 1568 | REV. B
SHEET NO. 3 OF 15

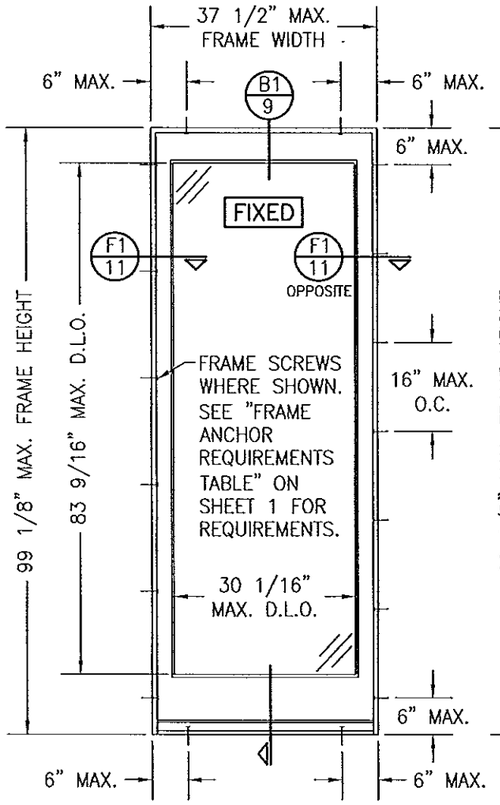

EXTERIOR ELEVATION:
SINGLE FIXED PANEL DOOR
SCALE: 1/2" = 1'-0"
(FRAME SCREW MOUNT CONDITION)

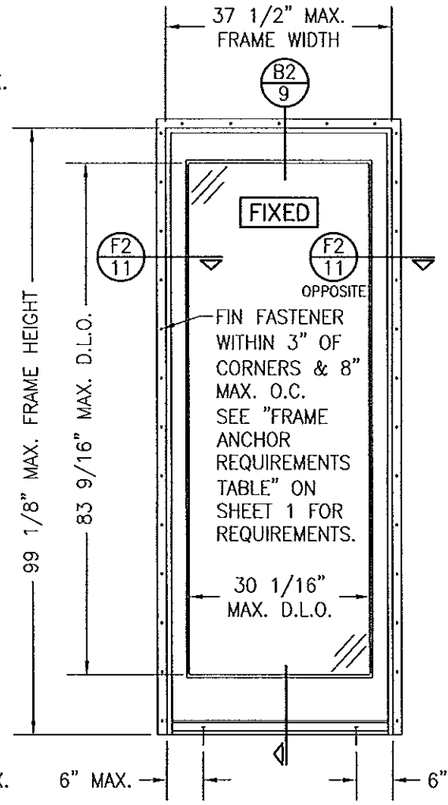

EXTERIOR ELEVATION:
SINGLE FIXED PANEL DOOR
SCALE: 1/2" = 1'-0"
(NAIL FIN MOUNT CONDITION)

ALLOWABLE DESIGN PRESSURE
(SINGLE FIXED PANEL DOOR)
+65/-85 PSF

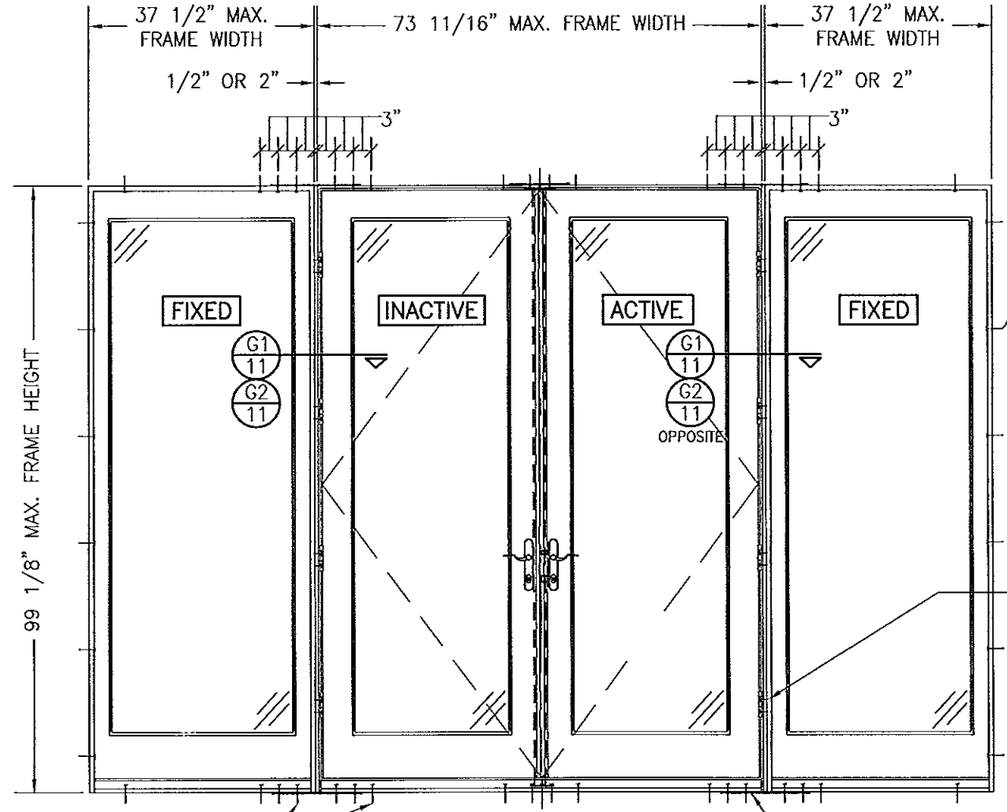

ADDITIONAL FRAME SCREWS WHERE SHOWN AT MULLION ENDS (4 SCREWS TOTAL WHEN REQ'D PRESSURE ON DOOR IS +/-60 PSF OR LESS; 6 TOTAL WHEN REQ'D PRESSURE IS GREATER THAN +/-60 PSF) . SEE "FRAME ANCHOR REQUIREMENTS TABLE" ON SHEET 1 FOR REQUIREMENTS.

EXTERIOR ELEVATION:
DOUBLE DOORS WITH FIXED PANELS
SCALE: 1/2" = 1'-0"
(FRAME SCREW MOUNT CONDITION)
(RECTANGULAR DOORS SHOWN, EYEBROW TOP CONDITION ALSO APPLIES)

ALLOWABLE DESIGN PRESSURE
(SIDE BY SIDE UNITS)
+65/-75 PSF

0.05" X 4" X 15" 50 KSI GALVANIZED MULLION END REINFORCEMENT PLATE AT EACH MULLION END LOCATION. SECURED TO EACH FRAME/SILL MEMBER WITH FIVE(5) 16 GA. X 7/16" X 1/2" LONG STAPLES.

PRODUCT REVISED
as complying with the Florida Building Code
Acceptance No. 14-0513.05
Expiration Date 3/12/19
By Miami Dade Product Control

MULTIPLE UNIT NOTES:

1. FOR ALL DETAIL NOT SHOWN, SEE INDIVIDUAL UNIT ELEVATIONS.
2. THERE IS NO LIMIT ON THE NUMBER OF DOORS THAT MAY BE COMBINED IN ONE DIRECTION INTO ONE OPENING PROVIDING THE OPENING IS DESIGNED TO SUPPORT ALL LOADS TRANSFERRED FROM THE DOORS & THEIR MULLIONS.
3. OXXO UNIT IS SHOWN. ALL OTHER FIXED/OPERABLE COMBINATIONS ALSO APPLY WITH THE MULLION CONDITIONS SHOWN.
4. INDIVIDUAL DOOR SIZES SHALL BE RESTRICTED AS SPECIFIED IN THE SINGLE UNIT ELEVATIONS.

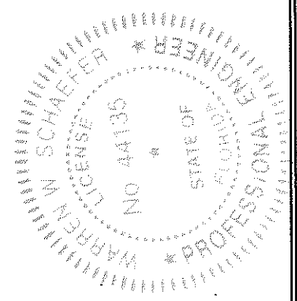

NO.	REVISION DESCRIPTION	BY	DATE

DRAWN BY: W.R.M. | CHECKED BY: W.W.S.
PLOT: 1=24 | DATE: 04/30/09

DRAWING TITLE
1604 ALUMINUM CLAD OUT-SWING IMPACT DOOR

MANUFACTURER
WEATHER SHIELD WINDOWS & DOORS
ONE WEATHER SHIELD PLAZA
MEDFORD, WI 54451
715-748-6555

CONSULTANTS
W. W. SCHAEFER ENGINEERING & CONSULTING, P.A. (CA 6809)
7480 150TH COURT NORTH
PALM BEACH GARDENS, FL 33418
PHONE: 561-744-3424

CERTIFICATION
APR 16 2014
WARREN W. SCHAEFER P.E.
P.E. NO. 44135

DRAWING NO. 1568 | REV. B
SHEET NO. 4 OF 15

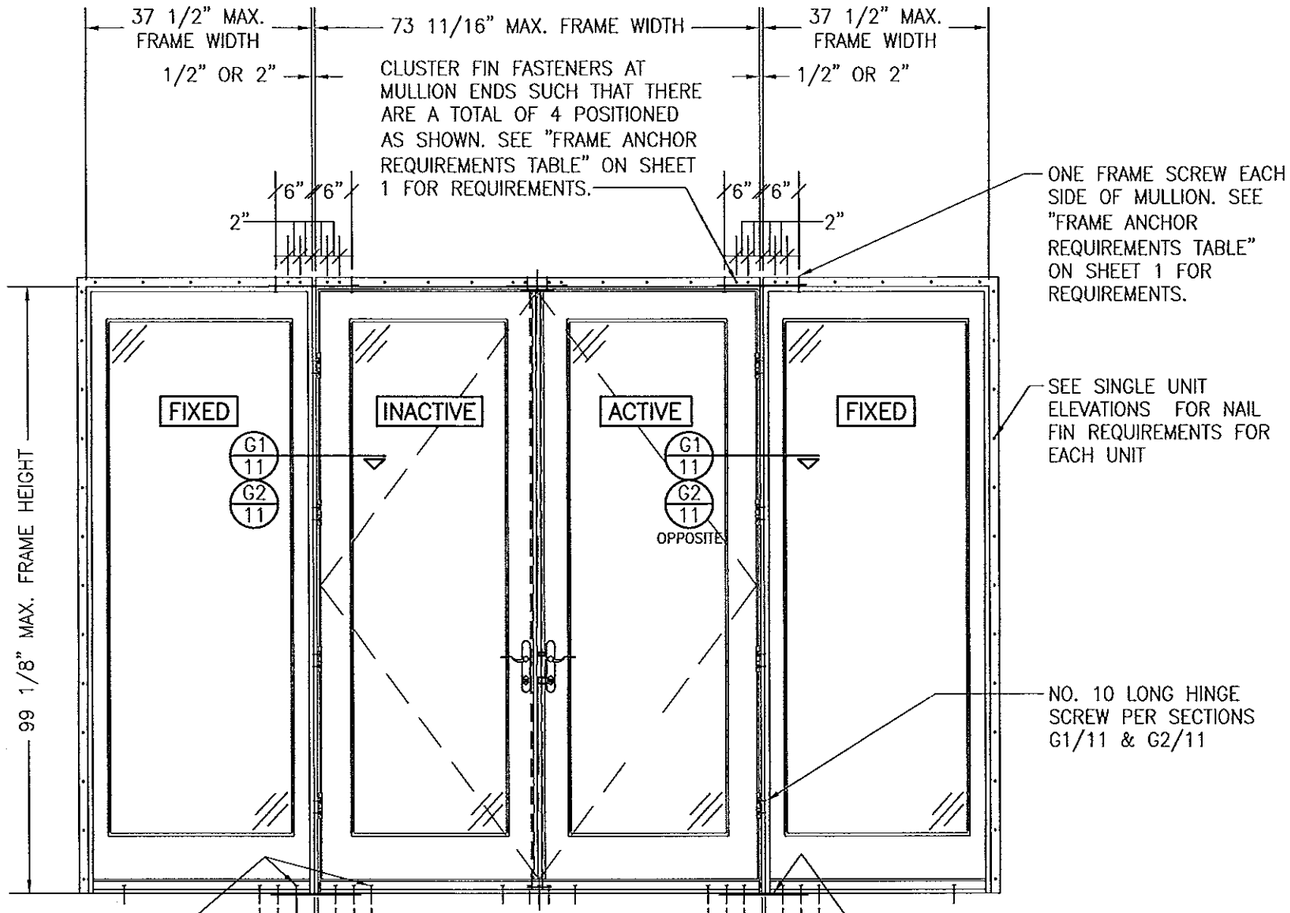

EXTERIOR ELEVATION: DOUBLE DOORS WITH FIXED PANELS

SCALE: 1/2" = 1'-0"
(NAIL FIN MOUNT CONDITION)
(RECTANGULAR DOORS SHOWN, EYEBROW TOP CONDITION ALSO APPLIES)

ALLOWABLE DESIGN PRESSURE (SIDE BY SIDE UNITS)
+65/-75 PSF

MULTIPLE UNIT NOTES:

1. FOR ALL DETAIL NOT SHOWN, SEE INDIVIDUAL UNIT ELEVATIONS.
2. THERE IS NO LIMIT ON THE NUMBER OF DOORS THAT MAY BE COMBINED IN ONE DIRECTION INTO ONE OPENING PROVIDING THE OPENING IS DESIGNED TO SUPPORT ALL LOADS TRANSFERRED FROM THE DOORS & THEIR MULLIONS.
3. OXXO UNIT IS SHOWN. ALL OTHER FIXED/OPERABLE COMBINATIONS ALSO APPLY WITH THE MULLION CONDITIONS SHOWN.
4. INDIVIDUAL DOOR SIZES SHALL BE RESTRICTED AS SPECIFIED IN THE SINGLE UNIT ELEVATIONS.

PRODUCT REVISED
as complying with the Florida Building Code
Acceptance No. 14-0527.05
Expiration Date 3/16/20
By [signature]
Miami Dade Product Control

DRAWN BY: W.R.M.	CHECKED BY: W.W.S.
PLOT: 1=24	DATE: 04/30/09

NO.	REVISION DESCRIPTION	BY	DATE

DRAWING TITLE
1604 ALUMINUM CLAD OUT-SWING IMPACT DOOR

MANUFACTURER
WEATHER SHIELD WINDOWS & DOORS
ONE WEATHER SHIELD PLAZA
MEDFORD, WI 54451
715-748-6555

CONSULTANTS
W. W. SCHAEFER ENGINEERING & CONSULTING, P.A. (CA 6809)
7480 150TH COURT NORTH
PALM BEACH GARDENS, FL 33418
PHONE: 561-744-3424

CERTIFICATION
APR 16 2014
WARREN W. SCHAEFER, P.E.
P.E. NO. 44135

WARREN W. SCHAEFER * ENGINEER * LICENSE NO. 44135 * STATE OF FLORIDA * PROFESSIONAL

DRAWING NO.	REV.
1568	B

SHEET NO.
5 OF 15

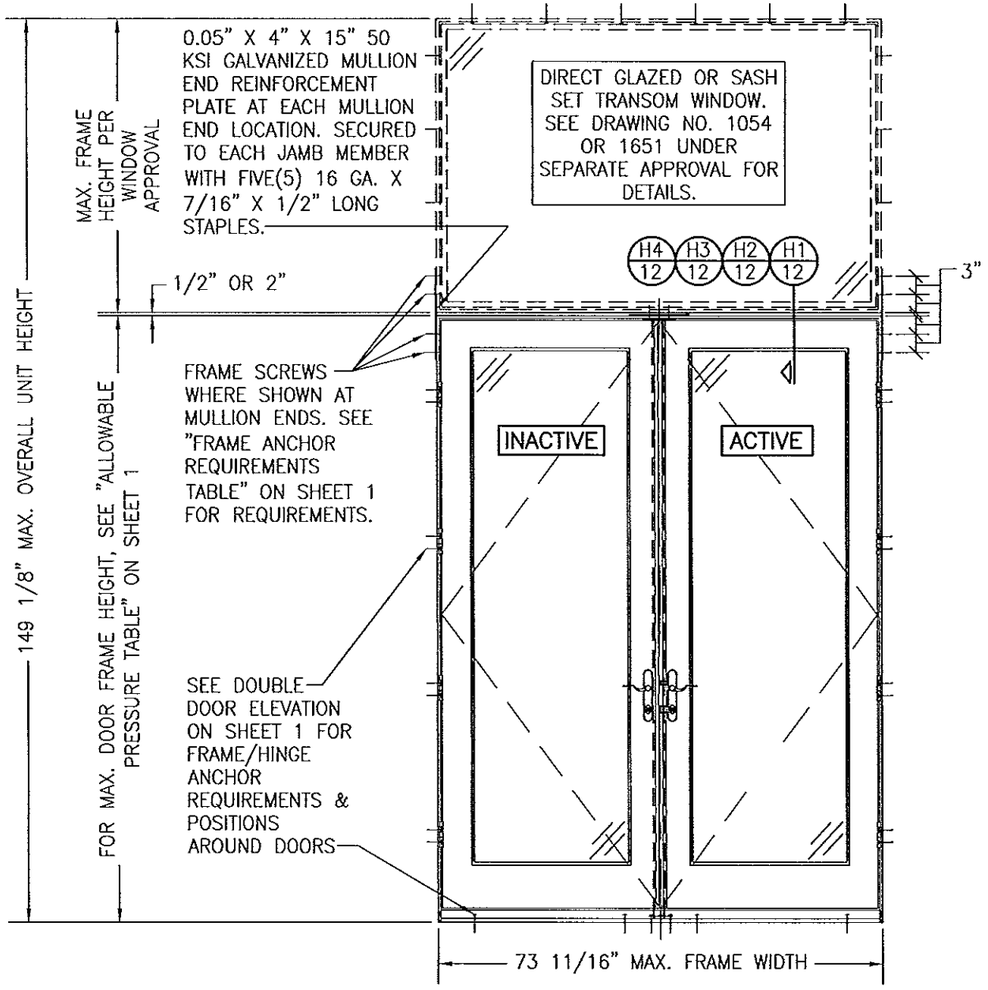

EXTERIOR ELEVATION; DOUBLE DOORS WITH TRANSOM

SCALE: 1/2" = 1'-0"
(FRAME SCREW MOUNT CONDITION)
(SEE DOUBLE RECTANGULAR DOOR ELEVATIONS ON SHEET 1 FOR DOOR DETAIL NOT SHOWN)

ALLOWABLE DESIGN PRESSURE (DOUBLE DOOR WITH TRANSOM UNIT)			
MAX. FRAME WIDTH (IN.)	MAX. OVERALL UNIT HEIGHT (IN.)	(1) ALLOWABLE PRESSURE	
		POSITIVE (PSF)	NEGATIVE (PSF)
73 11/16	149 1/8	65	75
73 11/16	130 1/4	65	85
(1) LESSER OF THE PRESSURES IN THIS TABLE & THOSE FOR THE INDIVIDUAL DOOR & TRANSOM SHALL CONTROL.			

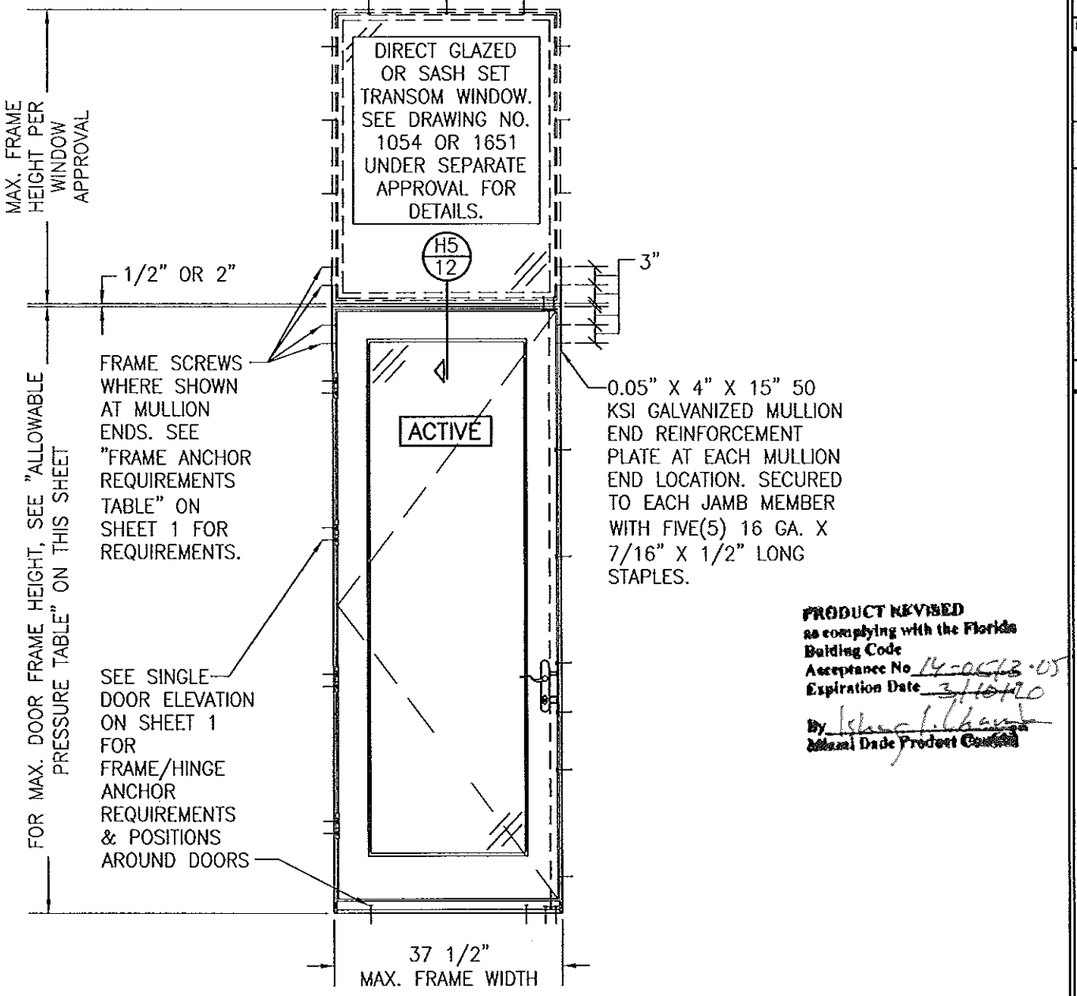

EXTERIOR ELEVATION; SINGLE DOOR WITH TRANSOM

SCALE: 1/2" = 1'-0"
(FRAME SCREW MOUNT CONDITION)
(SEE SINGLE RECTANGULAR DOOR ELEVATIONS ON SHEETS 1 & 4 FOR DOOR DETAIL NOT SHOWN)
(OPERABLE DOOR SHOWN. FIXED PANEL DOOR ALSO APPLIES)

ALLOWABLE DESIGN PRESSURE (SINGLE DOOR WITH TRANSOM UNIT)			
MAX. FRAME WIDTH (IN.)	MAX. DOOR FRAME HEIGHT (IN.)	(1) ALLOWABLE PRESSURE	
		POSITIVE (PSF)	NEGATIVE (PSF)
37 1/2	99 1/8	65	75
37 1/2	82	65	85
(1) LESSER OF THE PRESSURES IN THIS TABLE & THOSE FOR THE INDIVIDUAL DOOR & TRANSOM SHALL CONTROL.			

PRODUCT REVISED
as complying with the Florida Building Code
Acceptance No. 14-0513.05
Expiration Date 3/10/20
By Miami Dade Product Control

DRAWN BY: W.R.M. | CHECKED BY: W.W.S.
PLOT: 1=24 | DATE: 04/30/09

NO.	REVISION DESCRIPTION	BY	DATE

DRAWING TITLE
1604 ALUMINUM CLAD OUT-SWING IMPACT DOOR

MANUFACTURER
WEATHER SHIELD WINDOWS & DOORS
ONE WEATHER SHIELD PLAZA
MEDFORD, WI 54451
715-748-6555

CONSULTANTS
W. W. SCHAEFER ENGINEERING & CONSULTING, P.A. (CA 6809)
7480 150TH COURT NORTH
PALM BEACH GARDENS, FL 33418
PHONE: 561-744-3424

CERTIFICATION
APR 16 2014
WARREN W. SCHAEFER, P.E.
P.E. NO. 44135
STATE OF FLORIDA * PROFESSIONAL ENGINEER * WARREN W. SCHAEFER * LICENSE NO. 44135

DRAWING NO. 1568 | REV. B
SHEET NO. 6 OF 15

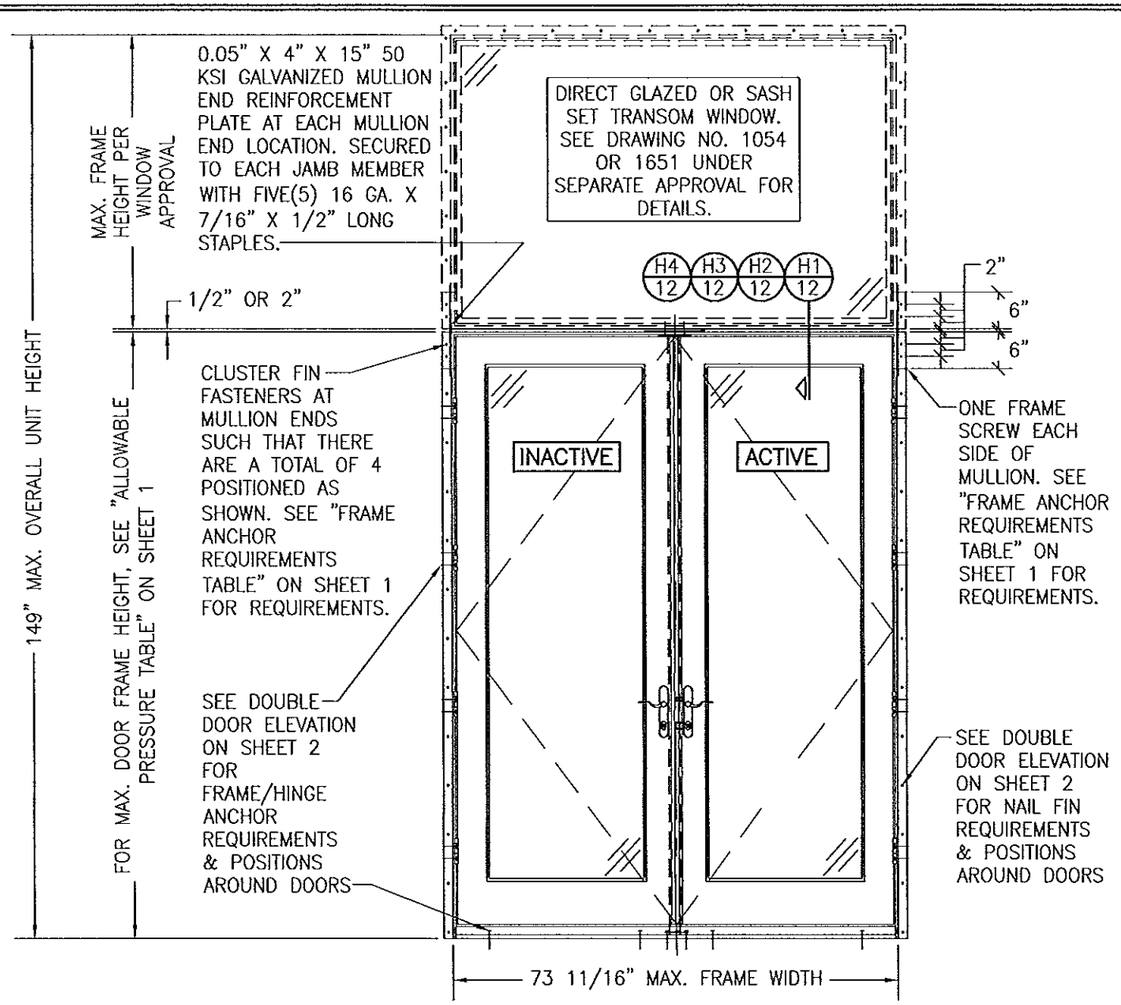

EXTERIOR ELEVATION: DOUBLE DOORS WITH TRANSOM

SCALE: 1/2" = 1'-0"
(NAIL FIN MOUNT CONDITION)
(SEE DOUBLE RECTANGULAR DOOR ELEVATIONS ON SHEET 2 FOR DOOR DETAIL NOT SHOWN)

ALLOWABLE DESIGN PRESSURE (DOUBLE DOOR WITH TRANSOM UNIT)			
MAX. FRAME WIDTH (IN.)	MAX. OVERALL UNIT HEIGHT (IN.)	(1) ALLOWABLE PRESSURE	
		POSITIVE (PSF)	NEGATIVE (PSF)
73 11/16	149 1/8	65	75
73 11/16	130 1/4	65	85
(1) LESSER OF THE PRESSURES IN THIS TABLE & THOSE FOR THE INDIVIDUAL DOOR & TRANSOM SHALL CONTROL.			

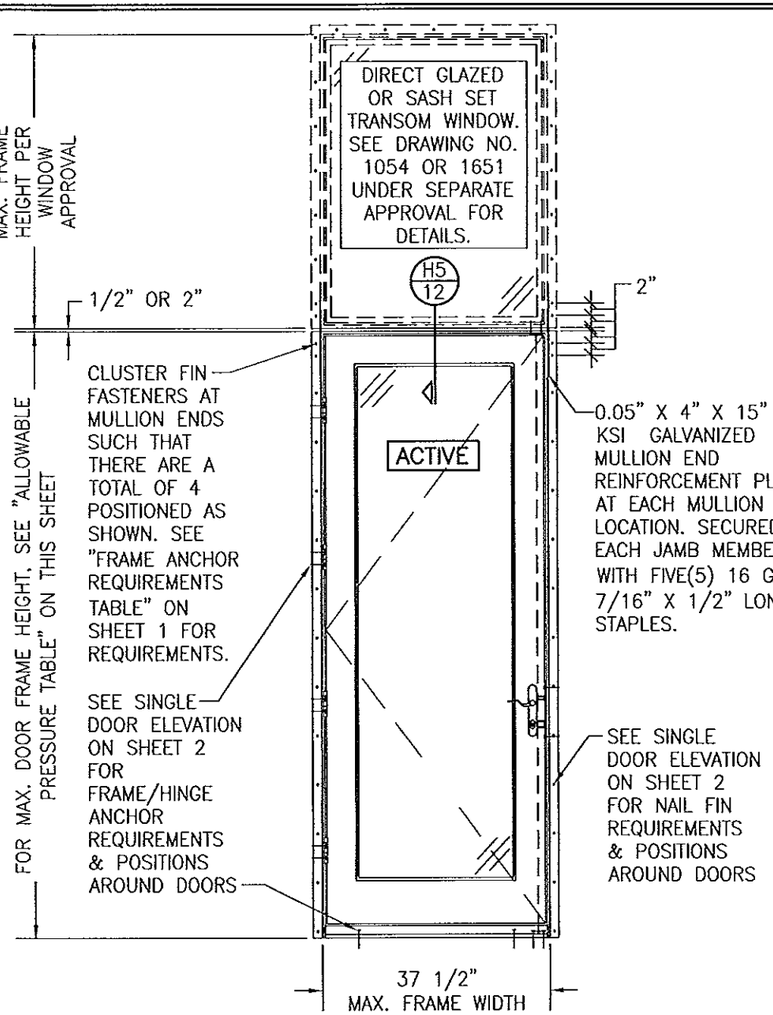

EXTERIOR ELEVATION: SINGLE DOOR WITH TRANSOM

SCALE: 1/2" = 1'-0"
(NAIL FIN MOUNT CONDITION)
(SEE SINGLE RECTANGULAR DOOR ELEVATIONS ON SHEET 2 FOR DOOR DETAIL NOT SHOWN)
(OPERABLE DOOR SHOWN. FIXED PANEL DOOR ALSO APPLIES)

ALLOWABLE DESIGN PRESSURE (SINGLE DOOR WITH TRANSOM UNIT)			
MAX. FRAME WIDTH (IN.)	MAX. DOOR FRAME HEIGHT (IN.)	(1) ALLOWABLE PRESSURE	
		POSITIVE (PSF)	NEGATIVE (PSF)
37 1/2	99 1/8	65	75
37 1/2	82	65	85
(1) LESSER OF THE PRESSURES IN THIS TABLE & THOSE FOR THE INDIVIDUAL DOOR & TRANSOM SHALL CONTROL.			

PRODUCT REVISED
as complying with the Florida Building Code
Acceptance No. 14-0723.05
Expiration Date 3/10/20
By
Miami Dade Product Control

DRAWN BY: W.R.M.	CHECKED BY: W.W.S.
PLOT: 1=24	DATE: 04/30/09

NO.	REVISION DESCRIPTION	BY	DATE

DRAWING TITLE
1604 ALUMINUM CLAD OUT-SWING IMPACT DOOR

MANUFACTURER
WEATHER SHIELD WINDOWS & DOORS
ONE WEATHER SHIELD PLAZA
MEDFORD, WI 54451
715-748-6555

CONSULTANTS
W. W. SCHAEFER ENGINEERING & CONSULTING, P.A. (CA 6809)
7480 150TH COURT NORTH
PALM BEACH GARDENS, FL 33418
PHONE: 561-744-3424

CERTIFICATION
APR 16 2014
WARREN W. SCHAEFER, P.E.
P.E. NO. 44135

DRAWING NO. 1568
REV. B
SHEET NO. 7 OF 15

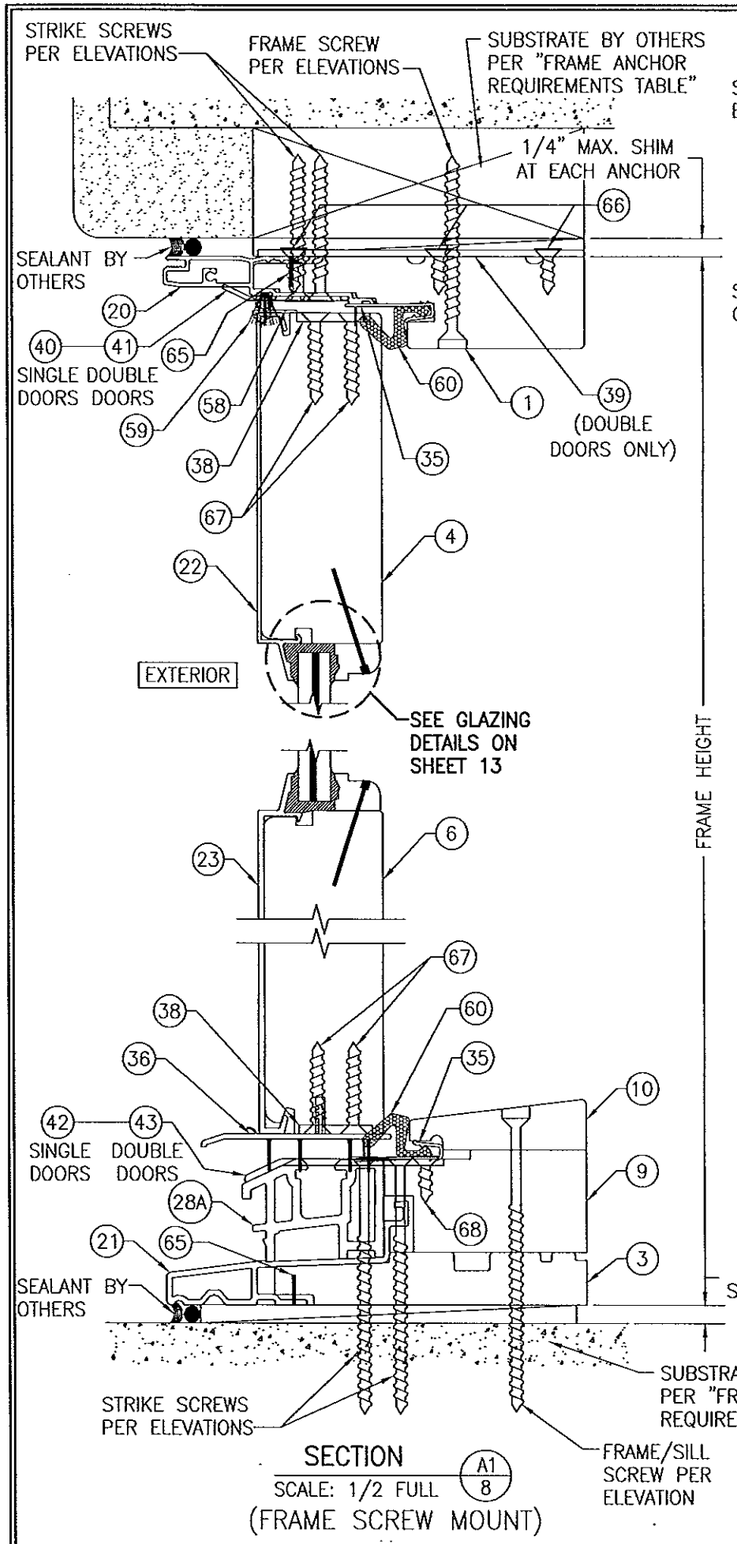

SECTION A1/8
SCALE: 1/2 FULL
(FRAME SCREW MOUNT)

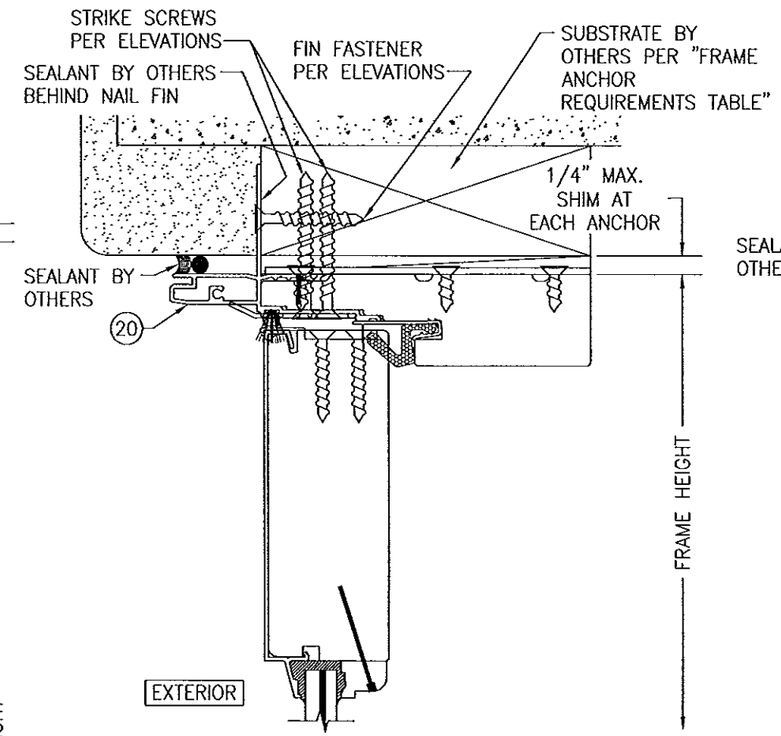

SECTION A2/8
SCALE: 1/2 FULL
(NAIL FIN MOUNT)
(FOR DETAIL & SILL SECTION NOT SHOWN, SEE SECTION A1/8)

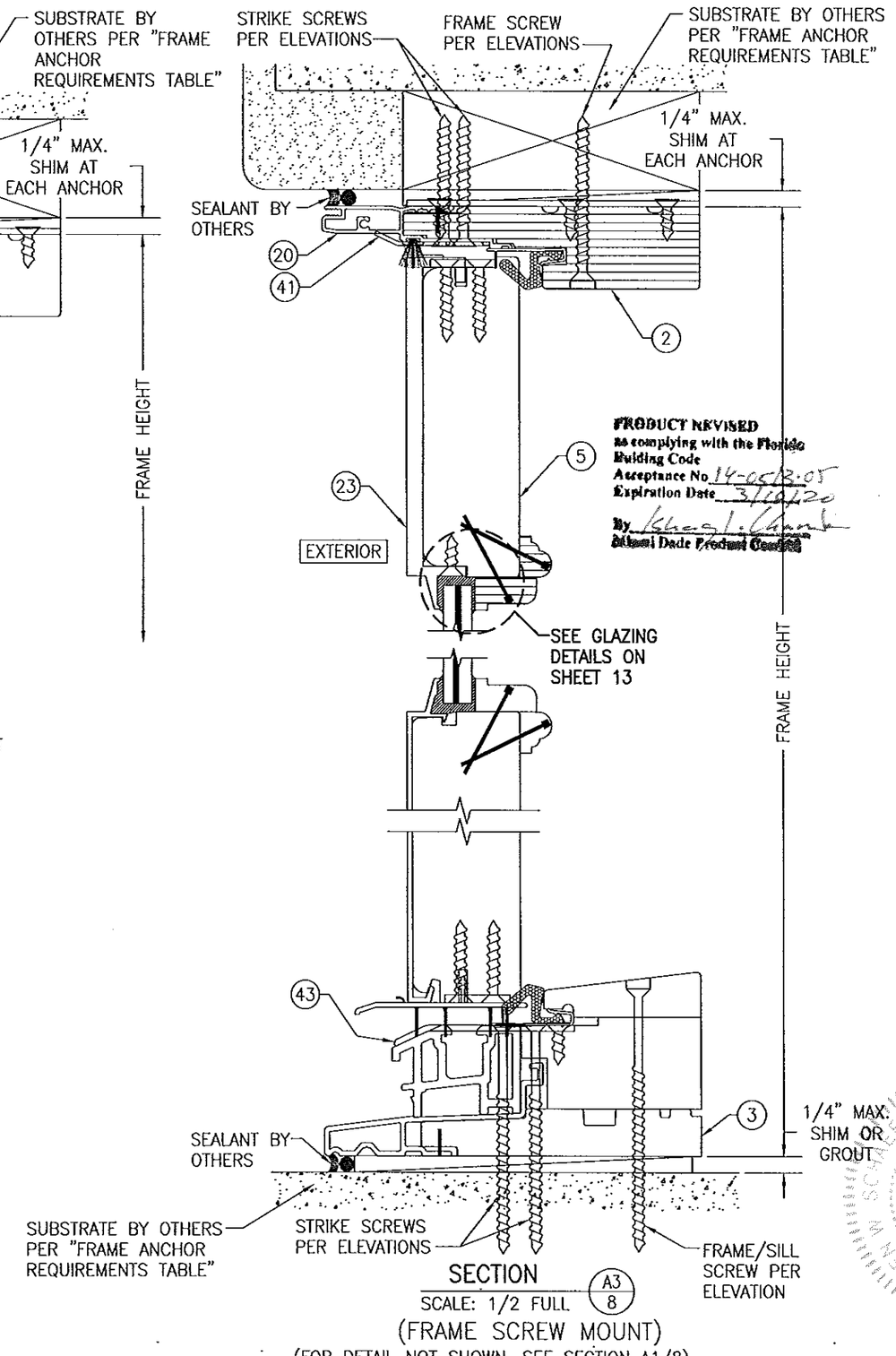

SECTION A3/8
SCALE: 1/2 FULL
(FRAME SCREW MOUNT)
(FOR DETAIL NOT SHOWN, SEE SECTION A1/8)

PRODUCT REVISED
as complying with the Florida Building Code
Acceptance No. 14-0513.05
Expiration Date 3/10/20
By [signature]
Miami Dade Product Control

DRAWN BY: W.R.M.	CHECKED BY: W.W.S.
PLOT: 1=2	DATE: 04/30/09

NO.	REVISION DESCRIPTION	BY	DATE

DRAWING TITLE
1604 ALUMINUM CLAD OUT-SWING IMPACT DOOR

MANUFACTURER
WEATHER SHIELD WINDOWS & DOORS
ONE WEATHER SHIELD PLAZA
MEDFORD, WI 54451
715-748-6555

CONSULTANTS
W. W. SCHAEFER ENGINEERING & CONSULTING, P.A. (CA 6809)
7480 150TH COURT NORTH
PALM BEACH GARDENS, FL 33418
PHONE: 561-744-3424

CERTIFICATION
APR 16 2014
WARREN W. SCHAEFER, P.E.
P.E. NO. 44135

DRAWING NO.	REV.
1568	B

SHEET NO.
8 OF 15

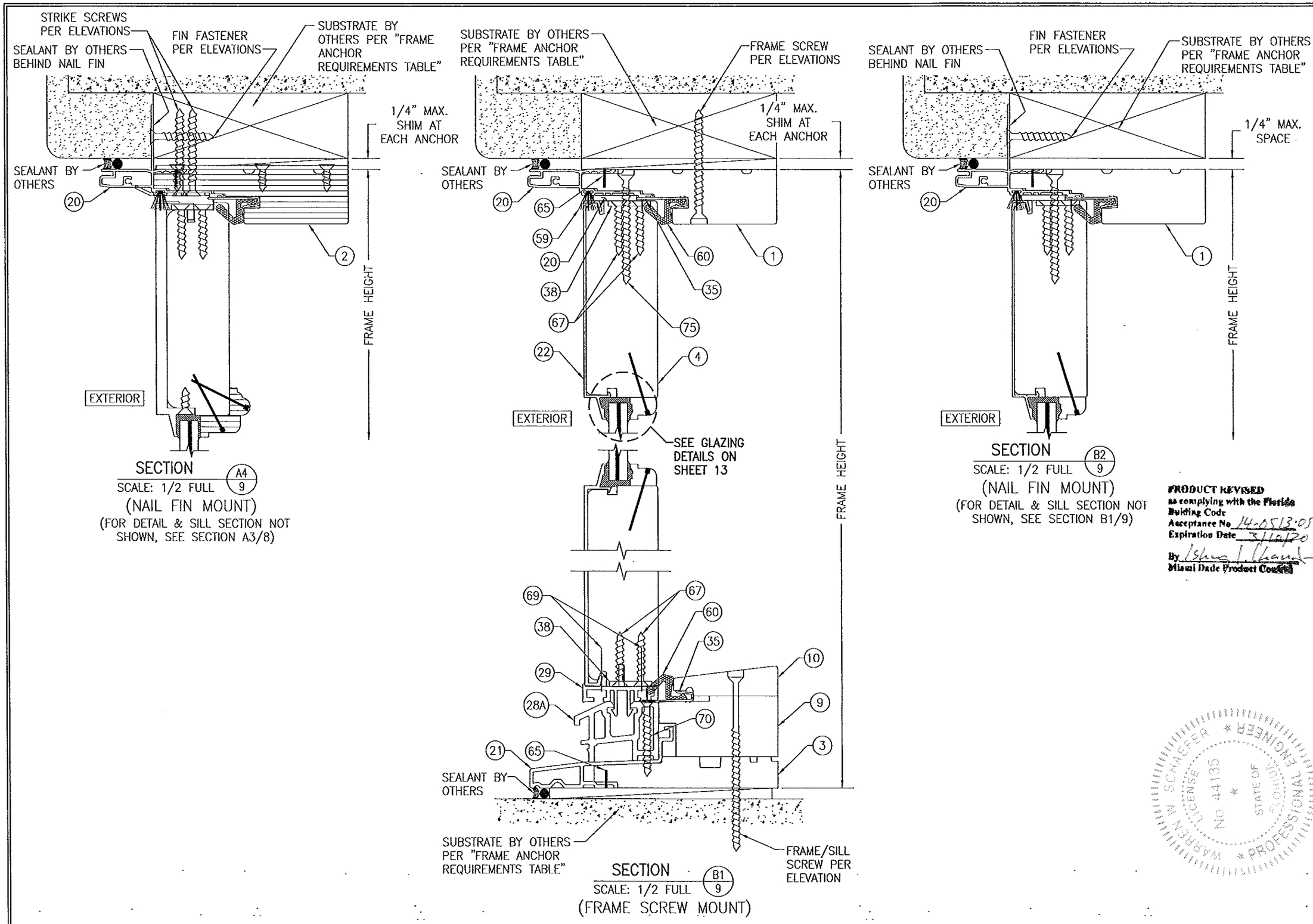

PRODUCT REVISED
as complying with the Florida Building Code
Acceptance No 14-0513.05
Expiration Date 3/10/20
By Ishwa I. Chand
Miami Dade Product Control

WARREN W. SCHAEFER LICENSE No. 44135 STATE OF FLORIDA PROFESSIONAL ENGINEER

DRAWN BY: W.R.M.	CHECKED BY: W.W.S.
PLOT: 1=2	DATE: 04/30/09

NO.	REVISION DESCRIPTION	BY	DATE

DRAWING TITLE
1604 ALUMINUM CLAD OUT-SWING IMPACT DOOR

MANUFACTURER
WEATHER SHIELD WINDOWS & DOORS
ONE WEATHER SHIELD PLAZA
MEDFORD, WI 54451
715-748-6555

CONSULTANTS
W. W. SCHAEFER ENGINEERING & CONSULTING, P.A. (CA 6809)
7480 150TH COURT NORTH
PALM BEACH GARDENS, FL 33418
PHONE: 561-744-3424

CERTIFICATION
APR 16 2014
WARREN W. SCHAEFER, P.E.
P.E. NO. 44135

DRAWING NO. 1568 REV. B
SHEET NO. 9 OF 15

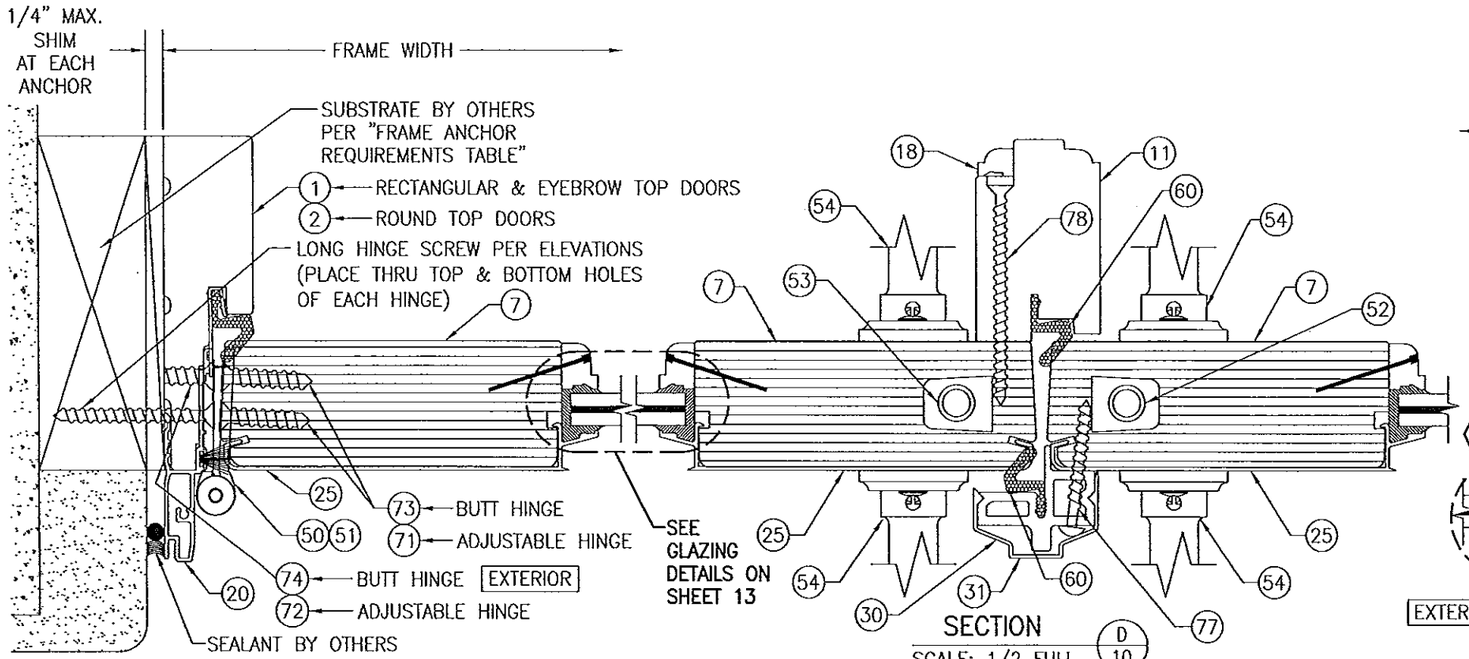

SECTION C1/10
SCALE: 1/2 FULL

(FRAME SCREW MOUNT)

(BUTT HINGE CONDITION SHOWN. ADJUSTABLE HINGE CONDITION ALSO APPLIES)

SECTION D/10
SCALE: 1/2 FULL

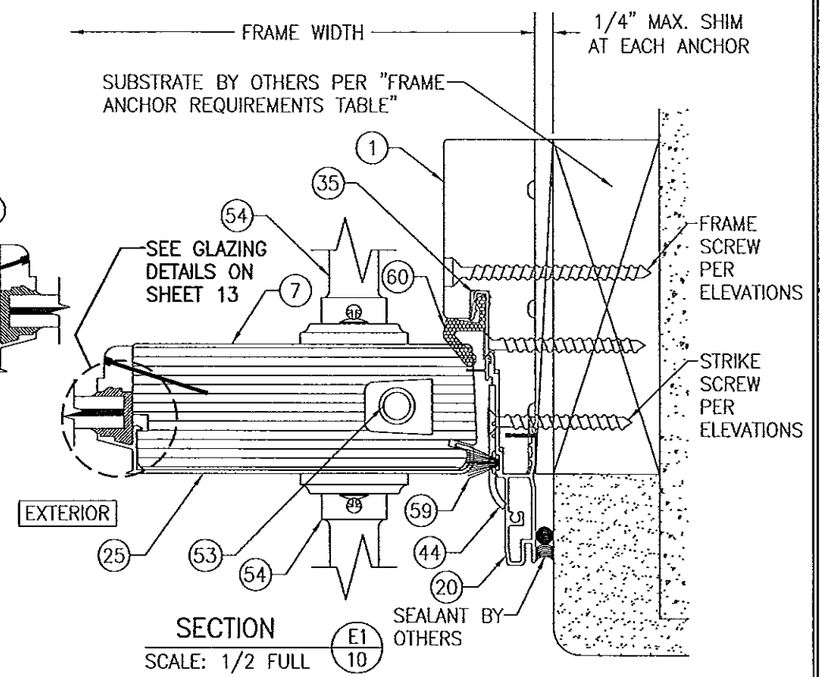

SECTION E1/10
SCALE: 1/2 FULL

(FRAME SCREW MOUNT)

PRODUCT REVISED
as complying with the Florida Building Code
Acceptance No. 14051.3-05
Expiration Date 3/16/20
By Warren W. Schaefer
Miami Dade Product Control

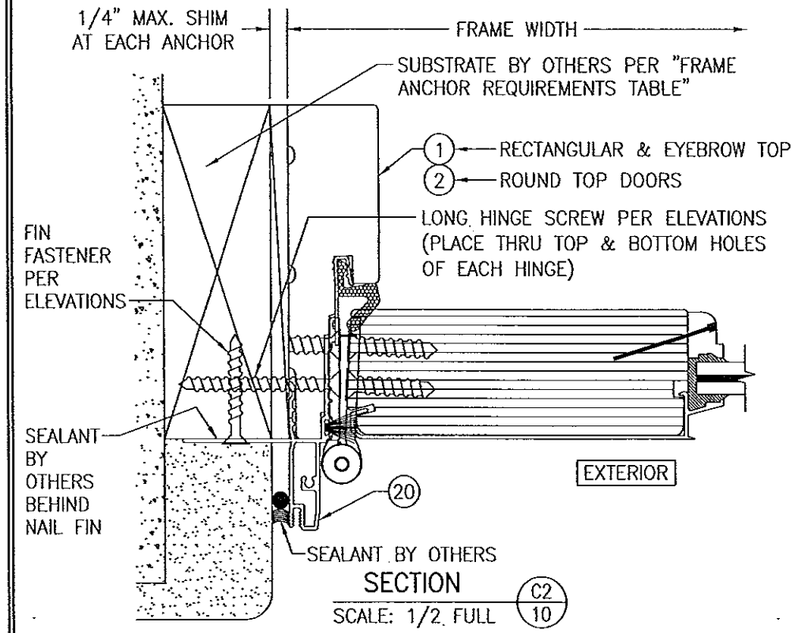

SECTION C2/10
SCALE: 1/2 FULL

(NAIL FIN MOUNT)

(FOR DETAIL NOT SHOWN, SEE SECTION C1/10)

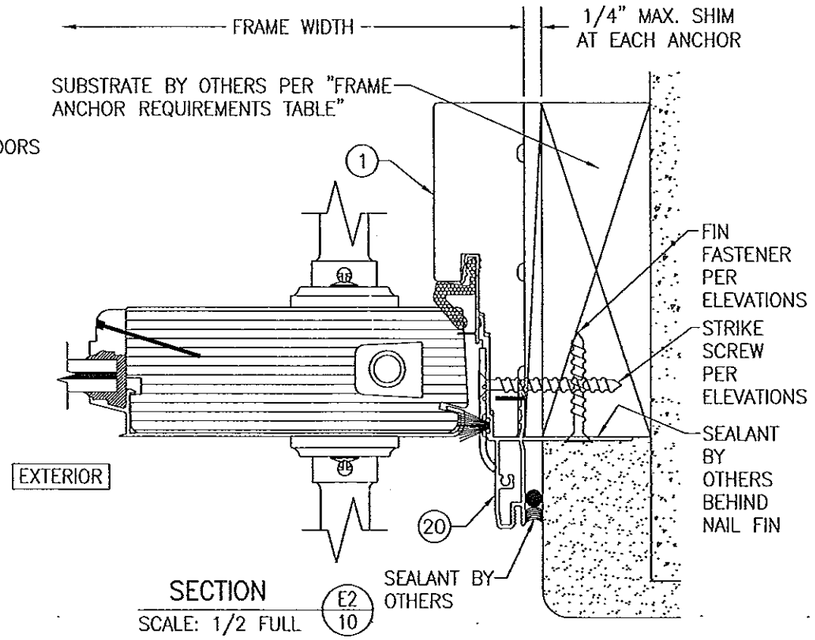

SECTION E2/10
SCALE: 1/2 FULL

(NAIL FIN MOUNT)

(FOR DETAIL NOT SHOWN, SEE SECTION E1/10)

NO.	REVISION DESCRIPTION	BY	DATE

DRAWN BY: W.R.M. | CHECKED BY: W.W.S.
PLOT: 1=2 | DATE: 04/30/09

DRAWING TITLE
1604 ALUMINUM CLAD OUT-SWING IMPACT DOOR

MANUFACTURER
WEATHER SHIELD WINDOWS & DOORS
ONE WEATHER SHIELD PLAZA
MEDFORD, WI 54451
715-748-6555

CONSULTANTS
W. W. SCHAEFER ENGINEERING & CONSULTING, P.A. (CA 6809)
7480 150TH COURT NORTH
PALM BEACH GARDENS, FL 33418
PHONE: 561-744-3424

CERTIFICATION
APR 16 2014
WARREN W. SCHAEFER, P.E.
P.E. NO. 44135

WARREN W. SCHAEFER * LICENSE NO. 44135 * STATE OF FLORIDA * PROFESSIONAL ENGINEER *

DRAWING NO. 1568 | REV. B
SHEET NO. 10 OF 15

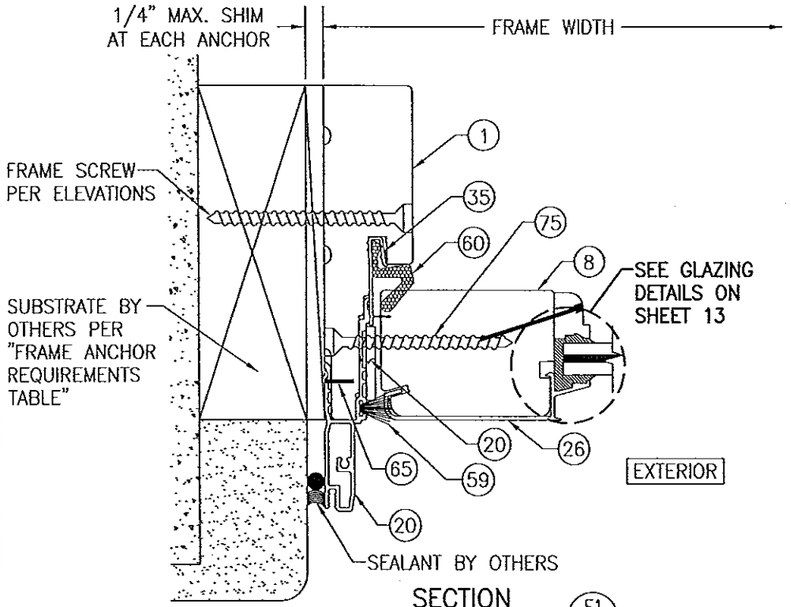

SECTION F1/11
SCALE: 1/2 FULL
(FRAME SCREW MOUNT)

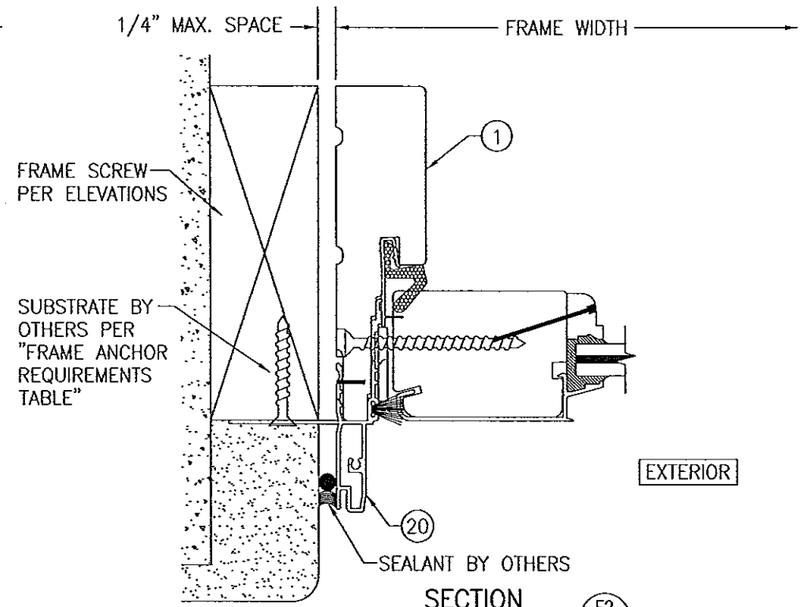

SECTION F2/11
SCALE: 1/2 FULL
(NAIL FIN MOUNT)
(FOR DETAIL NOT SHOWN, SEE SECTION F1/11)

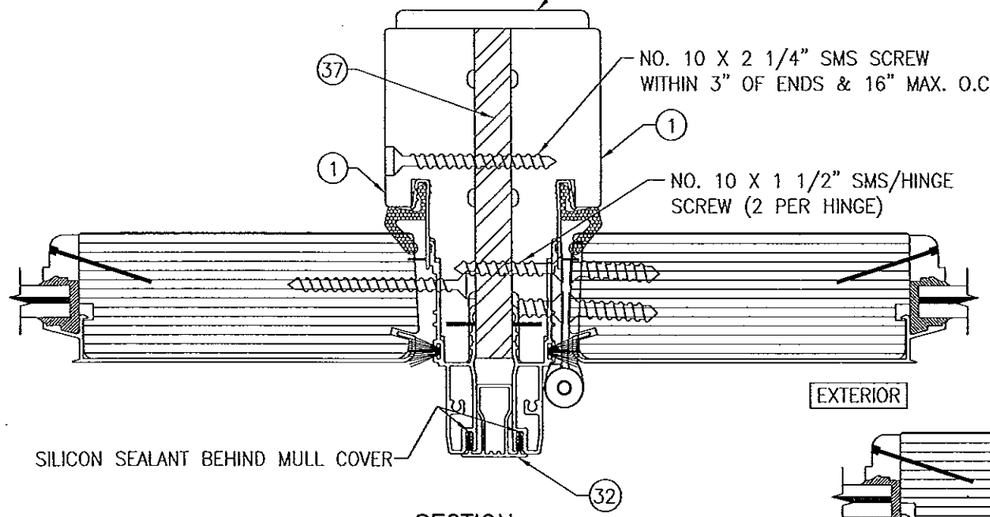

SECTION G1/11
SCALE: 1/2 FULL
(FOR DETAIL NOT SHOWN, SEE OTHER SECTIONS)

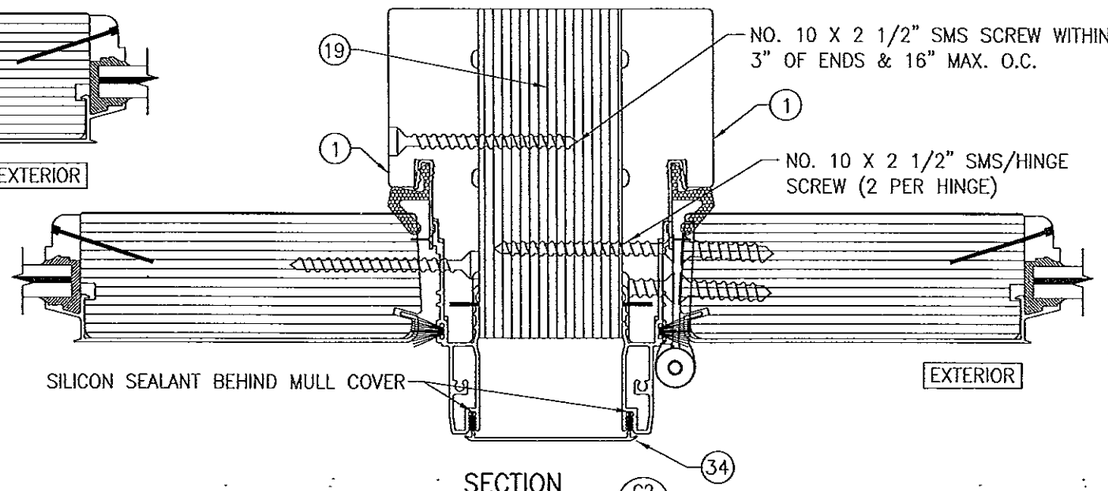

SECTION G2/11
SCALE: 1/2 FULL
(FOR DETAIL NOT SHOWN, SEE OTHER SECTIONS)

PRODUCT REVISED
as complying with the Florida Building Code
Acceptance No 14-0513.05
Expiration Date 3/14/20
By [signature]
Miami Dade Product Control

NO.	REVISION DESCRIPTION	BY	DATE

DRAWN BY: W.R.W. | CHECKED BY: W.W.S.
PLOT: 1=2 | DATE: 04/30/09

DRAWING TITLE
1604 ALUMINUM CLAD OUT-SWING IMPACT DOOR

MANUFACTURER
WEATHER SHIELD WINDOWS & DOORS
ONE WEATHER SHIELD PLAZA
MEDFORD, WI 54451
715-748-6555

CONSULTANTS
W. W. SCHAEFER ENGINEERING & CONSULTING, P.A. (CA 6809)
7480 150TH COURT NORTH
PALM BEACH GARDENS, FL 33418
PHONE: 561-744-3424

CERTIFICATION
APR 16 2014
WARREN W. SCHAEFER, P.E.
P.E. NO. 44135

WARREN W. SCHAEFER LICENSE NO 44135 STATE OF FLORIDA PROFESSIONAL ENGINEER

DRAWING NO. 1568 | REV. B
SHEET NO. 11 OF 15

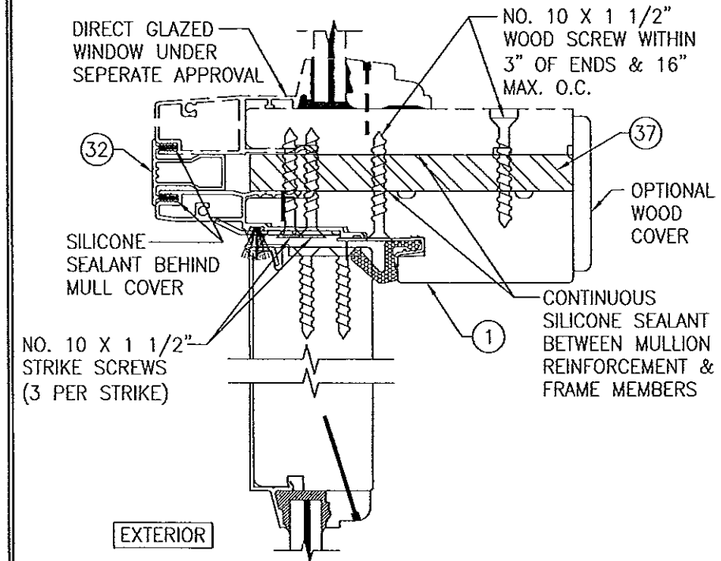

SECTION H1/12
SCALE: 1/2 FULL

(FOR DETAIL NOT SHOWN, SEE OTHER SECTIONS)

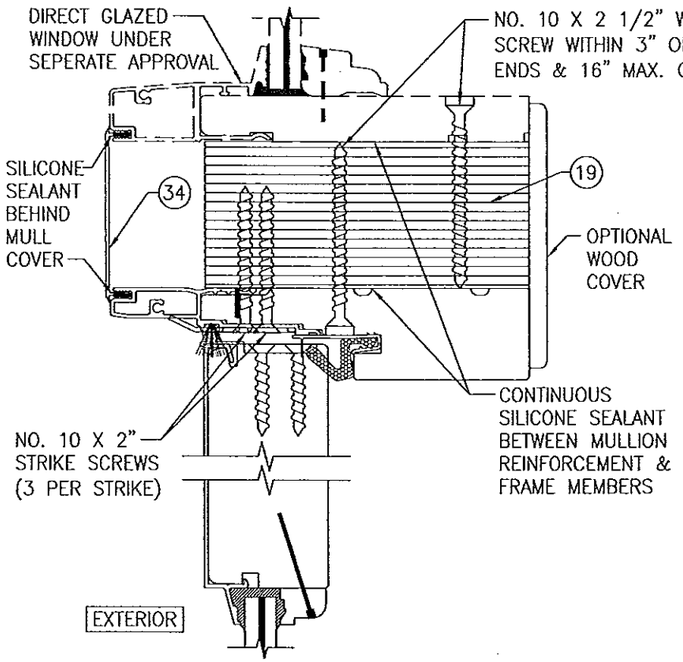

SECTION H2/12
SCALE: 1/2 FULL

(FOR DETAIL NOT SHOWN, SEE OTHER SECTIONS)

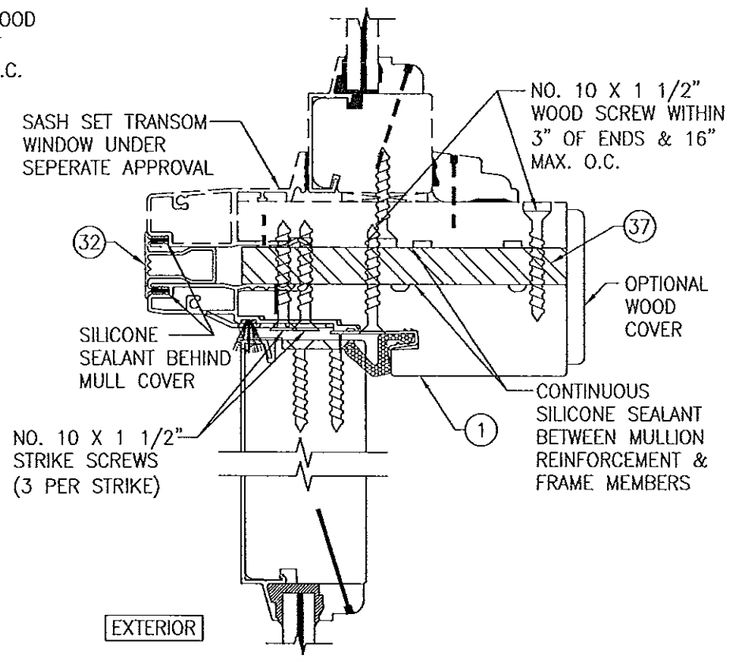

SECTION H3/12
SCALE: 1/2 FULL

(FOR DETAIL NOT SHOWN, SEE OTHER SECTIONS)

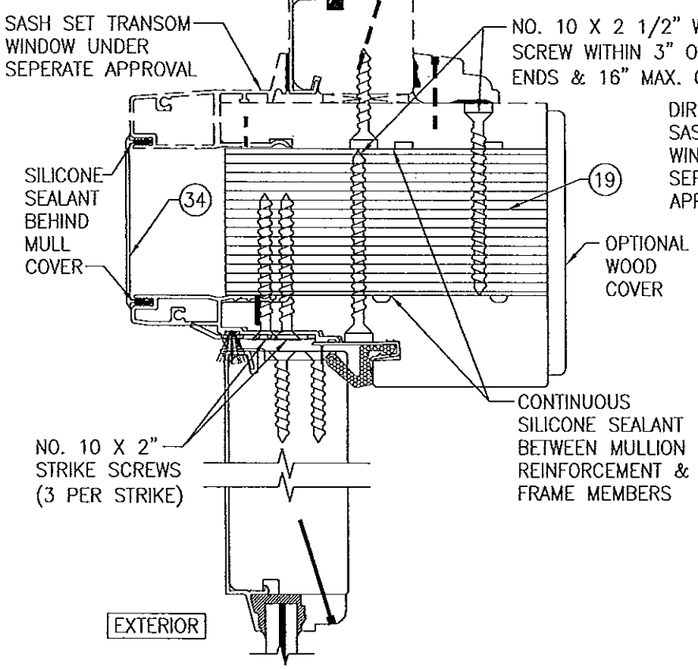

SECTION H4/12
SCALE: 1/2 FULL

(FOR DETAIL NOT SHOWN, SEE OTHER SECTIONS)

OPTIONAL FIELD MULLING:
WHEN FIELD MULLED, THE CORRUGATED FASTENERS MAY BE REPLACED WITH NO. 10 X 1" SCREWS AT EACH JAMB WITHIN 3" OF ENDS & MAX. 16" O.C.

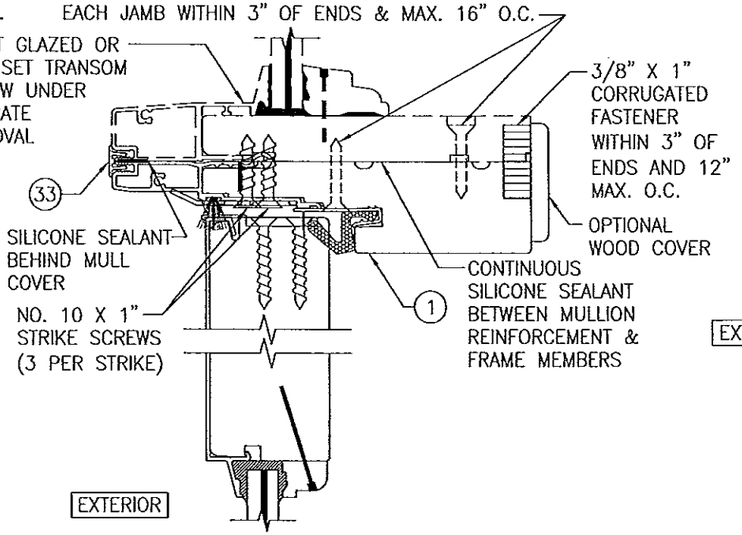

SECTION H5/12
SCALE: 1/2 FULL

(FOR DETAIL NOT SHOWN, SEE OTHER SECTIONS)
(OPERABLE DOOR CONDITION SHOWN. FIXED PANEL DOOR ALSO APPLIES)
(IF BAR OR LVL REINFORCEMENT IS USED, SEE SECTIONS H1-H4/11 FOR DETAILS)

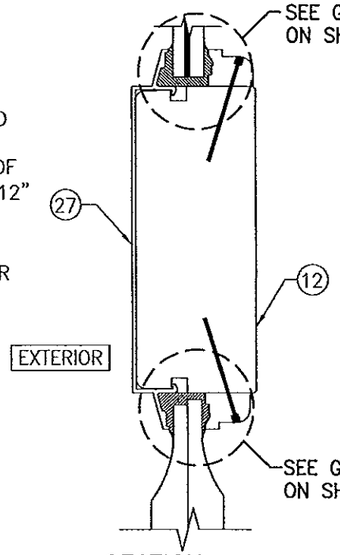

SECTION J/12
SCALE: 1/2 FULL

PRODUCT REVISED
as complying with the Florida Building Code
Acceptance No. 14-0513.05
Expiration Date 3/14/20
By [signature]
Miami Dade Product Control

DRAWN BY: W.R.M.	CHECKED BY: W.W.S.
PLOT: 1=2	DATE: 04/30/09

NO.	REVISION DESCRIPTION	BY	DATE

DRAWING TITLE
1604 ALUMINUM CLAD OUT-SWING IMPACT DOOR

MANUFACTURER
WEATHER SHIELD WINDOWS & DOORS
ONE WEATHER SHIELD PLAZA
MEDFORD, WI 54451
715-748-6555

CONSULTANTS
W. W. SCHAEFER ENGINEERING & CONSULTING, P.A. (CA 6809)
7480 150TH COURT NORTH
PALM BEACH GARDENS, FL 33418
PHONE: 561-744-3424

CERTIFICATION
APR 16 2014
WARREN W. SCHAEFER, P.E.
P.E. NO. 44135

LICENSED WARREN W. SCHAEFER NO 44135 STATE OF FLORIDA PROFESSIONAL ENGINEER

DRAWING NO. 1568 | REV. B
SHEET NO. 12 OF 15

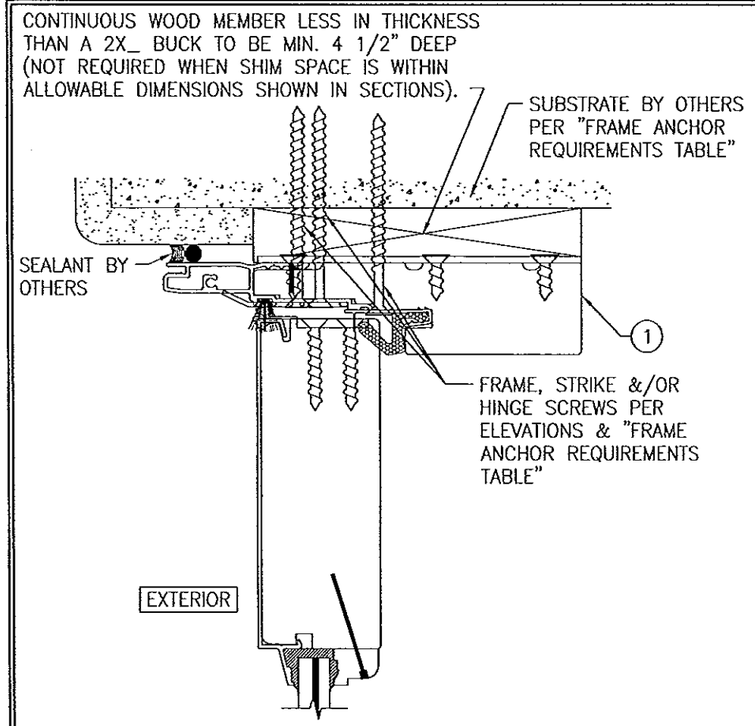

OPTIONAL DIRECT MOUNT DETAIL
TO SUBSTRATE WITH SPACER
(HEAD SECTION SHOWN. SILL & SIDES ARE INSTALLED THE SAME)
(FOR DETAIL NOT SHOWN, SEE OTHER SECTIONS)

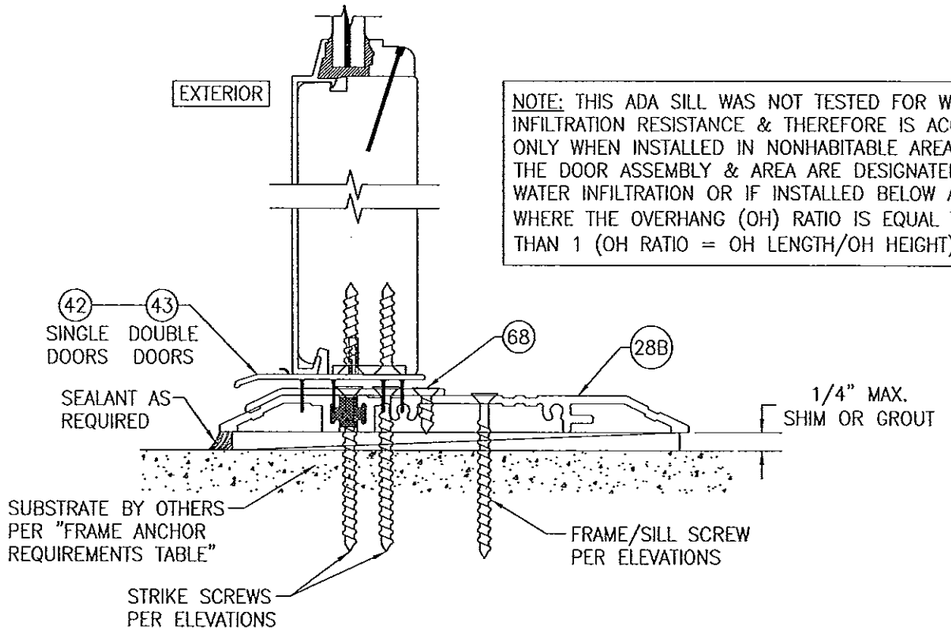

NOTE: THIS ADA SILL WAS NOT TESTED FOR WATER INFILTRATION RESISTANCE & THEREFORE IS ACCEPTABLE ONLY WHEN INSTALLED IN NONHABITABLE AREAS WHERE THE DOOR ASSEMBLY & AREA ARE DESIGNATED TO ACCEPT WATER INFILTRATION OR IF INSTALLED BELOW AN OVERHANG WHERE THE OVERHANG (OH) RATIO IS EQUAL TO OR MORE THAN 1 (OH RATIO = OH LENGTH/OH HEIGHT).

OPTIONAL ADA SILL DETAIL
(APPLICABLE WITH ALL DOOR CONDITIONS)
(FOR DETAIL NOT SHOWN, SEE OTHER SECTIONS)

PRODUCT REVISED
as complying with the Florida Building Code
Acceptance No. 14-0513.05
Expiration Date 3/14/20
By [signature]
Miami Dade Product Control

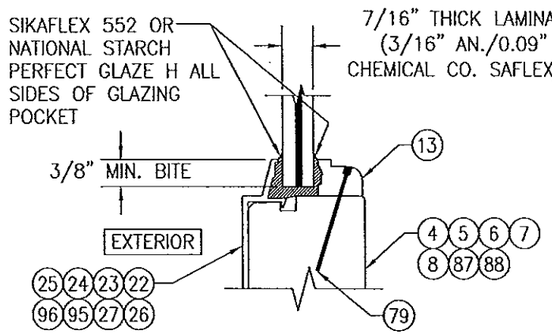

TYPICAL GLAZING DETAIL
(RECTANGUALR & EYBROW CONDITIONS)

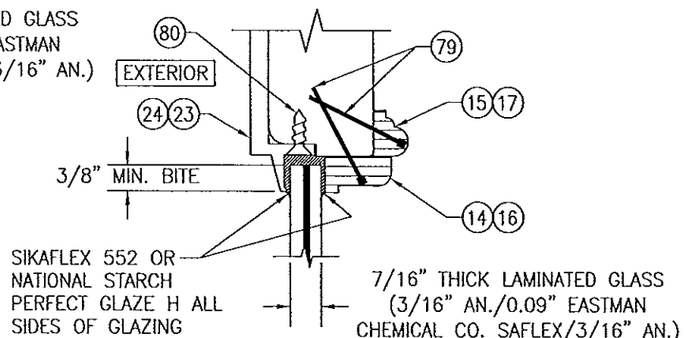

TYPICAL GLAZING DETAIL
(ROUND TOP CONDITION)

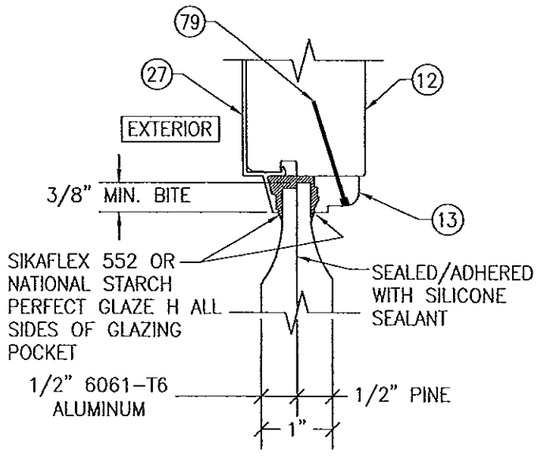

TYPICAL RAISED PANEL
GLAZING DETAIL

WARREN W. SCHAEFER LICENSE NO 44135 STATE OF FLORIDA PROFESSIONAL ENGINEER

DRAWN BY: W.R.M.	CHECKED BY: W.W.S.
PLOT: 1=2	DATE: 04/30/09

NO.	REVISION DESCRIPTION	BY	DATE

DRAWING TITLE
1604 ALUMINUM CLAD OUT-SWING IMPACT DOOR

MANUFACTURER
WEATHER SHIELD WINDOWS & DOORS
ONE WEATHER SHIELD PLAZA
MEDFORD, WI 54451
715-748-6555

CONSULTANTS
W. W. SCHAEFER ENGINEERING & CONSULTING, P.A. (CA 6809)
7480 150TH COURT NORTH
PALM BEACH GARDENS, FL 33418
PHONE: 561-744-3424

CERTIFICATION
APR 16 2014
WARREN W. SCHAEFER, P.E.
P.E. NO. 44135

DRAWING NO. 1568
REV. B
SHEET NO. 13 OF 15

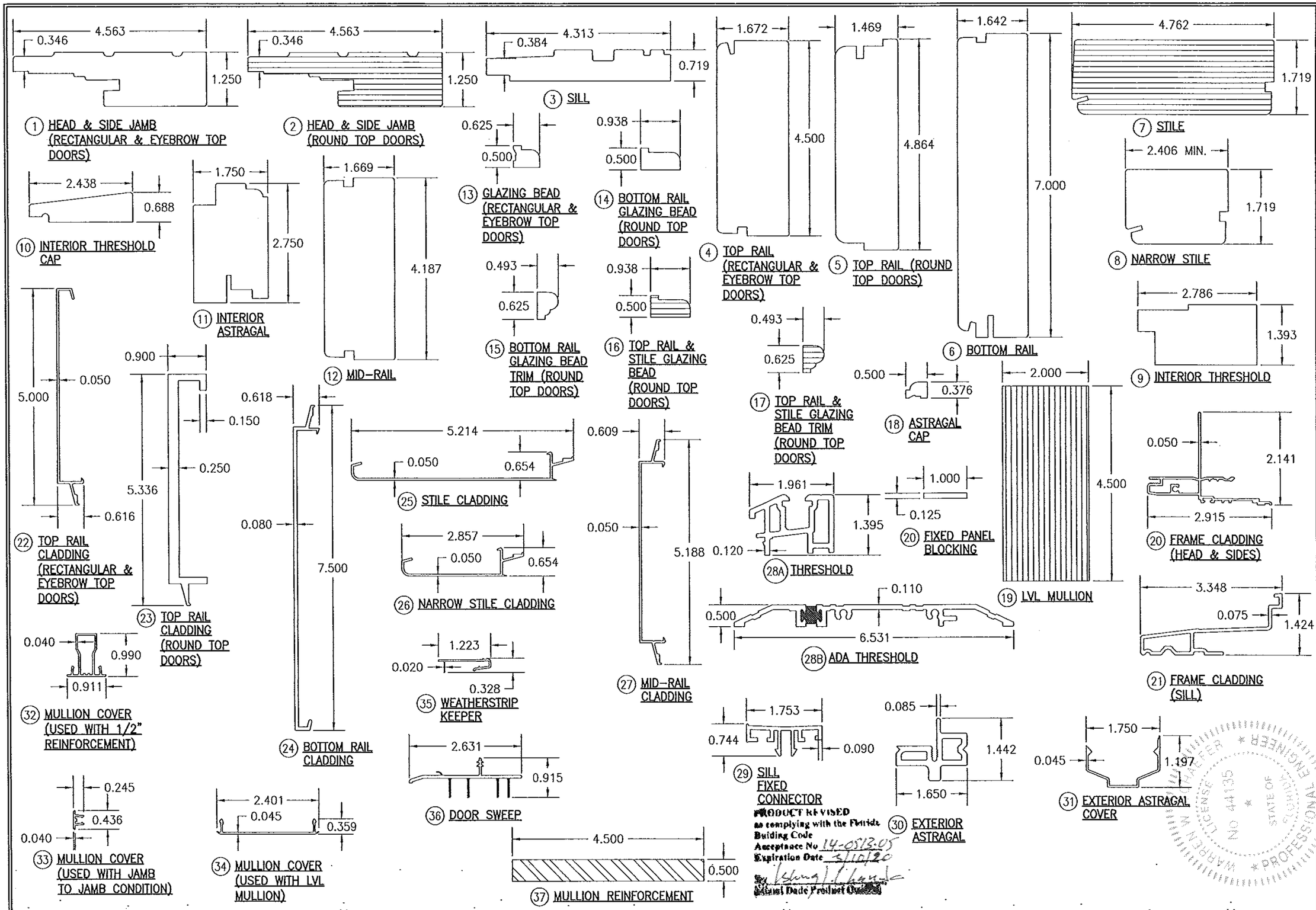

DRAWN BY: W.R.W.	CHECKED BY: W.W.S.
PLOT: 1=2	DATE: 04/30/09

NO.	REVISION DESCRIPTION	BY	DATE

DRAWING TITLE
1604 ALUMINUM CLAD OUT-SWING IMPACT DOOR

MANUFACTURER
WEATHER SHIELD WINDOWS & DOORS
ONE WEATHER SHIELD PLAZA
MEDFORD, WI 54451
715-748-6555

CONSULTANTS
W. W. SCHAEFER ENGINEERING & CONSULTING, P.A. (CA 6809)
7480 150TH COURT NORTH
PALM BEACH GARDENS, FL 33418
PHONE: 561-744-3424

CERTIFICATION
APR 16 2014
WARREN W. SCHAEFER P.E.
P.E. NO. 44135
STATE OF FLORIDA * PROFESSIONAL ENGINEER * WARREN W. SCHAEFER * LICENSE NO. 44135

DRAWING NO. 1568 | REV. B

SHEET NO. 14 OF 15

ITEM #	ITEM DESCRIPTION	MANUFACTURER/NOTES
	PARTS	
1	HEAD & SIDE JAMB (RECTANGULAR & EYEBROW TOP DOORS)	WOOD (FINGER JOINTED)
2	HEAD & SIDE JAM (ROUND TOP DOORS)	MICROLLAM LVL BY WEYERHAEUSER (E MIN.=1,900,000 PSI; Fb MIN.=2,600 PSI)
3	SILL	WOOD (FINGER JOINTED)
4	TOP RAIL RECTANGULAR & EYEBROW TOP DOORS	WOOD
5	TOP RAIL (ROUND TOP DOORS)	WOOD
6	BOTTOM RAIL	WOOD
7	STILE	MICROLLAM LVL BY WEYERHAEUSER (E MIN.=1,900,000 PSI; Fb MIN.=2,600 PSI)
8	NARROW STILE	WOOD
9	INTERIOR THRESHOLD	WOOD
10	INTERIOR THRESHOLD CAP	WOOD
11	INTERIOR ASTRAGAL	WOOD
12	MID-RAIL	WOOD
13	GLAZING BEAD (RECTANGULAR & EYEBROW TOP DOORS)	WOOD
14	BOTTOM RAIL GLAZING BEAD (ROUND TOP DOORS)	WOOD
15	BOTTOM RAIL GLAZING BEAD TRIM (ROUND TOP DOORS)	WOOD
16	TOP RAIL & STILE GLAZING BEAD (ROUND TOP DOORS)	MICROLLAM LVL BY WEYERHAEUSER (PER CURRENT N.O.A.) (E MIN.=1,900,000 PSI; Fb MIN.=2,600 PSI)
17	TOP RAIL & STILE GLAZING BEAD TRIM (ROUND TOP DOORS)	MICROLLAM LVL BY WEYERHAEUSER (PER CURRENT N.O.A.) (E MIN.=1,900,000 PSI; Fb MIN.=2,600 PSI)
18	ASTRAGAL CAP	WOOD
19	LVL MULLION	MICROLLAM LVL BY WEYERHAEUSER (PER CURRENT N.O.A.) (E MIN.=1,900,000 PSI; Fb MIN.=2,600 PSI)
20	FRAME CLADDING (HEAD & SIDES)	6063-T5 ALUMINUM
21	FRAME CLADDING (SILL)	6063-T5 ALUMINUM
22	TOP RAIL CLADDING (RECTANGULAR & EYEBROW TOP DOORS)	6063-T5 ALUMINUM
23	TOP RAIL CLADDING (ROUND TOP DOORS)	6063-T5 ALUMINUM
24	BOTTOM RAIL CLADDING	6063-T5 ALUMINUM
25	STILE CLADDING	6063-T5 ALUMINUM
26	NARROW STILE CLADDING	6063-T5 ALUMINUM
27	MID-RAIL CLADDING	6063-T5 ALUMINUM
28A	THRESHOLD	6063-T5 ALUMINUM
28B	ADA THRESHOLD	6063-T5 ALUMINUM
29	SILL FIXED CONNECTOR	VINYL
30	EXTERIOR ASTRAGAL	6063-T5 ALUMINUM
31	EXTERIOR ASTRAGAL COVER	6063-T5 ALUMINUM
32	MULLION COVER (USED WITH 1/2" REINFORCEMENT)	6063-T5 ALUMINUM
33	MULLION COVER (USED WITH JAMB TO JAMB CONDITION)	6063-T5 ALUMINUM
34	MULLION COVER (USED WITH LVL MULLION)	6063-T5 ALUMINUM
35	WEATHERSTRIP KEEPER	VINYL
36	DOOR SWEEP	VINYL
37	MULLION REINFORCEMENT	6061-T6 ALUMINUM

ITEM #	ITEM DESCRIPTION	MANUFACTURER/NOTES
	PARTS	
38	PANEL CORNER REINFORCEMENT BAR (10.100" X 1.000" X .120")	304 S.S. - 1 PER PANEL CORNER
39	HEAD JAMB BACKER PLATE (10.125" X 4.50" X .080")	304 S.S.
40	HEAD STRIKE PLATE (SINGLE DOORS) (2.500" X 1.747" X .090")	304 S.S.
41	HEAD STRIKE PLATE (DOUBLE DOORS) (5.634" X 1.762" X .060")	304 S.S.
42	SILL STRIKE PLATE (SINGLE DOORS) (2.812" X .800" X .120")	304 S.S.
43	SILL STRIKE PLATE (DOUBLE DOORS) (4.000" X 2.817" X .090")	304 S.S.
44	JAMB STRIKE PLATE (SINGLE DOORS) (9.331" X 1.692" X .090")	304 S.S.
	HARDWARE	
50	4" X 4" ADJUSTABLE HINGE (STEEL OR S.S.)	SIMONSWERKS; 3D MILLENNIUM
51	4" X 4" BUTT HINGE (STEEL OR S.S.)	HAGER 1191
52	3-POINT MULTI-POINT LOCK (ACTIVE PANEL)	ASHLAND; #XP45
53	2-POINT MULTI-POINT LOCK (INACTIVE PANEL)	ASHLAND; #XP45
54	HANDLE	AS REQ'D TO OPERATE LOCK
	SEALS & SEALANTS	
58	BULB WEATHERSTIP	WEATHER SHIELD; VINYL
59	PILE WEATHERSTRIP	ULTRAFAB
60	KERF WEATHERSTRIP	SCHLEGAL QED650
	FASTENERS	
65	18 GA. X 1/2" X 1/2" STAPLE	WITHIN 2" FROM ENDS & 7-9" O.C.
66	NO. 8 X 5/8" SMS OR WOOD SCREW	9 PER HEAD JAMB BACKER PLATE
67	NO. 8 X 1 1/4" WOOD SCREW	4 PER CORNER REINFORCEMENT PLATE
68	NO. 8 X 5/8" SMS OR WOOD SCREW	2 PER STRIKE
69	18 GA. X 1/2" X 1" STAPLE (2 ROWS)	WITHIN 1" FROM ENDS & 2" O.C.
70	NO. 8 X 1 3/4" WOOD SCREW	WITHIN 6" FROM ENDS & 8" O.C.
71	NO. 8 X 1 1/4" WOOD SCREW	4 PER ADJUSTABLE HINGE INTO STILE
72	NO. 8 X 5/8" SMS OR WOOD SCREW	2 PER ADJUSTABLE HINGE INTO JAMB
73	NO. 14 X 1 1/4" WOOD SCREW	4 PER BUTT HINGE INTO STILE
74	NO. 14 X 1 1/4" WOOD SCREW CUT DOWN TO 3/4" LONG AFTER INSTALL	2 PER BUTT HINGE INTO JAMB
75	NO. 8 X 2 1/2" WOOD SCREW	WITHIN 6" FROM ENDS & 10" O.C.
77	NO. 8 X 1 3/4" P.H. WOOD SCREW	WITHIN 4" FROM ENDS & 8" O.C.
78	NO. 8 X 3" WOOD SCREW	WITHIN 2" FROM ENDS & 6" O.C.
79	F16 X 1 1/2" BRAD NAIL	WITHIN 2" FROM CORNERS & 8"-10" O.C.
80	NO. 8 X 5/8" SMS OR WOOD SCREW	WITHIN 2" FROM ENDS & 4-8" O.C.

NOTE: WOOD USED IN TESTING WAS PINE WITH A SPECIFIC GRAVITY OF G = 0.43 AND A MODULUS OF ELASTICITY OF E = 1,200,000 PSI. OTHER WOOD SPECIES APPLICABLE FOR USE WITH THIS PRODUCT ARE THOSE WITH A SPECIFIC GRAVITY OF 0.43 AND MODULUS OF ELASTICITY OF 1,200,000 PSI OR GREATER. ALL WOOD IS MINIMUM GRADE 2 MILLED BY WEATHER SHIELD TO SELECT.

PRODUCT REVISED
to complying with the Florida
Building Code
Acceptance No. 14-0513.05
Expiration Date March 10, 2020
By Ishaq I. Chanda
Miami Dade Product Control

DRAWN BY: W.R.W. | CHECKED BY: W.W.S.
PLOT: 1=2 | DATE: 04/30/09

NO.	REVISION DESCRIPTION	BY	DATE

DRAWING TITLE
1604 ALUMINUM CLAD OUT-SWING IMPACT DOOR

MANUFACTURER
WEATHER SHIELD WINDOWS & DOORS
ONE WEATHER SHIELD PLAZA
MEDFORD, WI 54451
715-748-6555

CONSULTANTS
W. W. SCHAEFER ENGINEERING & CONSULTING, P.A. (CA 6809)
7480 150TH COURT NORTH
PALM BEACH GARDENS, FL 33418
PHONE: 561-744-3424

CERTIFICATION
APR 16 2014
WARREN W. SCHAEFER, P.E.
P.E. NO. 44135

DRAWING NO. 1568 | REV. B
SHEET NO. 15 OF 15