MIAMI-DADE COUNTY
DEPARTMENT OF REGULATORY AND ECONOMIC RESOURCES (RER)
BOARD AND CODE ADMINISTRATION DIVISION

MIAMI-DADE COUNTY
PRODUCT CONTROL SECTION
11805 SW 26 Street, Room 208
Miami, Florida 33175-2474
T (786) 315-2590 F (786) 315-2599
www.miamidade.gov/economy

NOTICE OF ACCEPTANCE (NOA)

Digger Specialties, Inc.
3446 US 6 East
Bremen, IN 46506

SCOPE:
This NOA is being issued under the applicable rules and regulations governing the use of construction materials. The documentation submitted has been reviewed and accepted by Miami-Dade County RER- Product Control Section to be used in Miami Dade County and other areas where allowed by the Authority Having Jurisdiction (AHJ).

This NOA shall not be valid after the expiration date stated below. The Miami-Dade County Product Control Section (In Miami Dade County) and/or the AHJ (in areas other than Miami Dade County) reserve the right to have this product or material tested for quality assurance purposes. If this product or material fails to perform in the accepted manner, the manufacturer will incur the expense of such testing and the AHJ may immediately revoke, modify, or suspend the use of such product or material within their jurisdiction. RER reserves the right to revoke this acceptance, if it is determined by Miami-Dade County Product Control Section that this product or material fails to meet the requirements of the applicable building code.

This product is approved as described herein, and has been designed to comply with the High Velocity Hurricane Zone of the Florida Building Code.

DESCRIPTION: **Westbury Aluminum Railing**

APPROVAL DOCUMENT: Drawing No. none, titled " Westbury Aluminum Railing ", sheets 1 through 44 of 44, prepared by Digger Specialties, Inc., last revision dated May 05, 2014, signed and sealed by Eric J. Tompos, P.E., on May 07, 2014, bearing the Miami-Dade County Product Control Revision stamp with the Notice of Acceptance number and the expiration date by the Miami-Dade County Product Control Section.

MISSILE IMPACT RATING: **None**

LABELING: Each unit shall bear a permanent label with the manufacturer's name or logo, city, state and the following statement: "Miami-Dade County Product Control Approved", unless otherwise noted herein.

RENEWAL of this NOA shall be considered after a renewal application has been filed and there has been no change in the applicable building code negatively affecting the performance of this product.

TERMINATION of this NOA will occur after the expiration date or if there has been a revision or change in the materials, use, and/or manufacture of the product or process. Misuse of this NOA as an endorsement of any product, for sales, advertising or any other purposes shall automatically terminate this NOA. Failure to comply with any section of this NOA shall be cause for termination and removal of NOA.

ADVERTISEMENT: The NOA number preceded by the words Miami-Dade County, Florida, and followed by the expiration date may be displayed in advertising literature. If any portion of the NOA is displayed, then it shall be done in its entirety.

INSPECTION: A copy of this entire NOA shall be provided to the user by the manufacturer or its distributors and shall be available for inspection at the job site at the request of the Building Official. The structural adequacy of the supporting structures is not part of this approval & shall be reviewed by the corresponding Building Dept.

This NOA **revises NOA #12-0629.05** and consists of this page 1, evidence submitted page E-1 as well as approval document mentioned above.
The submitted documentation was reviewed by **Helmy A. Makar, P.E., M.S.**

MIAMI-DADE COUNTY APPROVED

06/26/2014

NOA No. 14-0515.01
Expiration Date: 05/01/2019
Approval Date: 06/26/2014

Digger Specialties, Inc.

NOTICE OF ACCEPTANCE: EVIDENCE SUBMITTED

1. EVIDENCE SUBMITTED UNDER PREVIOUS APPROVAL # 12-0629.05

A. DRAWINGS

1. *Drawing No. none, titled " Westbury Aluminum Railing ", sheets 1 through 44 of 44, prepared by Digger Specialties, Inc., dated April 14, 2014, signed and sealed by Eric J. Tompos, P.E., on April 14, 2014.*

B. TESTS

1. *Code Compliance Research Report # CCRR-0163, BY ATI Evaluation Service, a Division of Architectural Testing – Certification Services, dated June 24, 2011.*

C. CALCULATIONS

1. *Calculations titled "Westbury Guardrail System", 32 pages, prepared by NTA, Inc., signed and sealed by Eric J. Tompos, P.E., on July 09, 2013.*

D. QUALITY ASSURANCE

1. *By Miami-Dade County Department of Regulatory and Economic Resources.*

E. MATERIAL CERTIFICATIONS

1. *None.*

2. NEW EVIDENCE SUBMITTED

A. DRAWINGS

1. *Drawing No. none, titled " Westbury Aluminum Railing ", sheets 1 through 44 of 44, prepared by Digger Specialties, Inc., last revision dated May 05, 2014, signed and sealed by Eric J. Tompos, P.E., on May 07, 2014.*

B. TESTS

1. *None.*

C. CALCULATIONS

1. *Calculations titled "Westbury Guardrail System", 25 pages, prepared by NTA, Inc., signed and sealed by Eric J. Tompos, P.E., on May 06, 2014.*

D. QUALITY ASSURANCE

1. *By Miami-Dade County Department of Regulatory and Economic Resources.*

E. MATERIAL CERTIFICATIONS

1. *None.*

Helmy A. Makar, P.E., M.S.
Product Control Unit Supervisor
NOA No. 14-0515.01
Expiration Date: 05/01/2019
Approval Date: 06/26/2014

REV.	DESCRIPTION	DATE
A	Changed spindle profile number 94252; was 94025.	05/05/2014
B	Changed spindle alloy/temper to 6063-T6.	05/06/2014

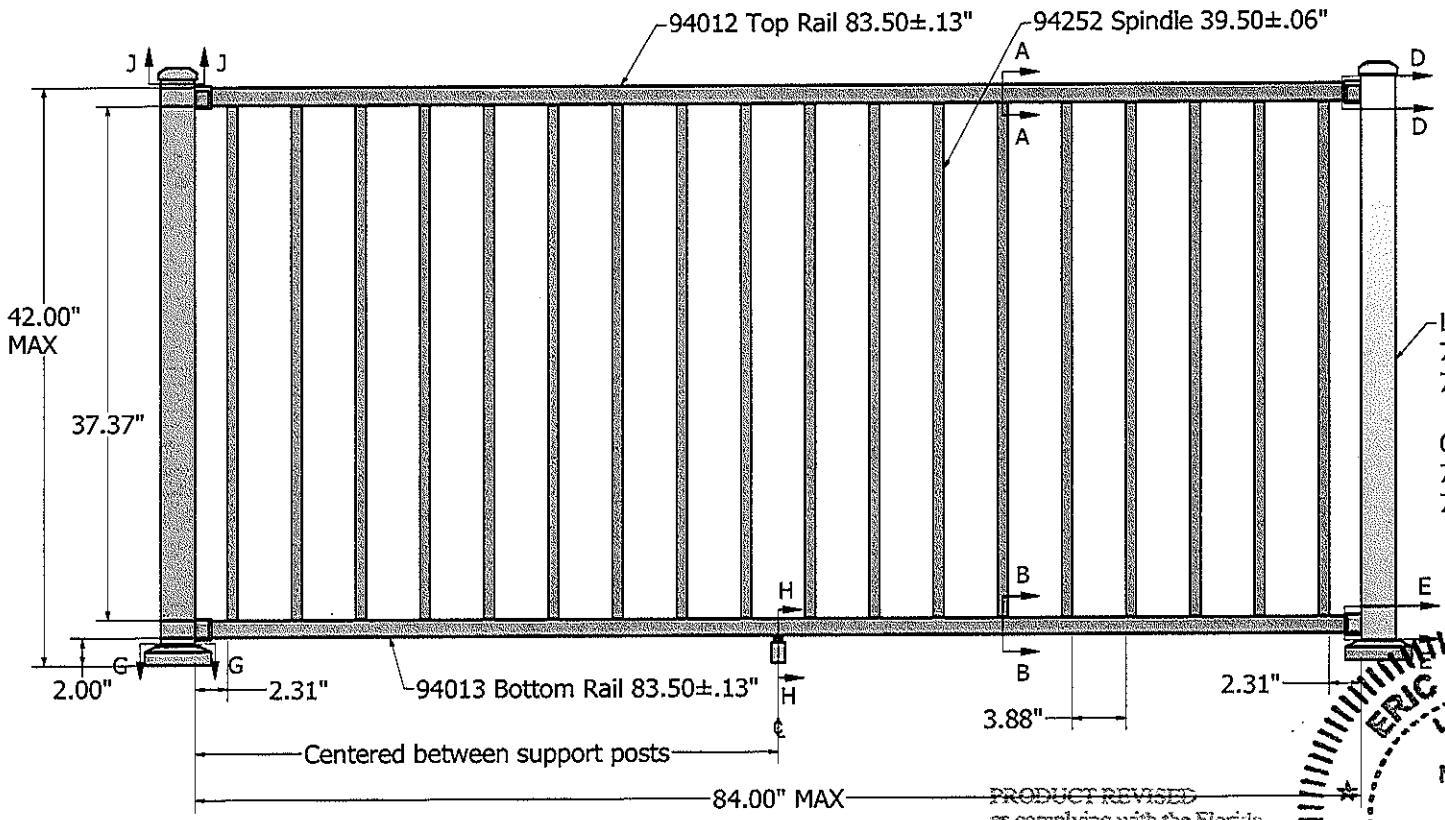

PRODUCT REVISED
as complying with the Florida Building Code
Acceptance No 14-0515.01
Expiration Date 05/01/2019
By
Miami Dade Product Control

ERIC J. TOMPOS LICENSE No 63511 STATE OF FLORIDA PROFESSIONAL ENGINEER

05/20/2014

This guardrail assembly is in compliance with the 2010 Florida Building Code Section 1607.7.1.
Accordingly it will resist a load of 50 lb/ft applied in any direction at the top rail,
It will resist a single concentrated load of 200 lbs applied in any direction at any point along the top,
and the internal balusters will withstand a horizontally applied normal load of 50 lbs applied over 1 square foot.

MATERIAL SPECIFICATIONS		
Description	Material	Alloy/Temper
Rails	Aluminum	6005-T5
Post	Aluminum	6005-T5
Plates	Aluminum	6061-T6
Spindles	Aluminum	6063-T6
Mounts & Caps	Zinc	Zamak 3
Inserts	Polyvinyl Cloride	---

Digger Specialties Inc.
3446 US 6 EAST
BREMEN, IN 46506
www.diggerspecialties.com

WEIGHT:

STANDARD TOLERANCE: .00 ±.01, .000 ±.005, ANG. ±.5°, FRACTIONS: ± 1/16"

DRAWN BY: WJM

DATE DRAWN: 4/9/2014

DRAFT NO. 20140409-3F

FILE LOC: Z:\Quality Manuals\CCRR-0163, 0202\2.1.7 Product Drawings&Changes\Westbury\Sections\C10 Sect 7ft x 42 Tall PP.idw

STYLE: Westbury Tuscany C10 (QCM Version)

PART NAME: C10 Sect 7ft x 42 Tall PP.idw

PART NUMBER: 70015

REV. B

REV.	DESCRIPTION	DATE
A	Changed spindle profile number 94252; was 94025.	05/05/2014
B	Changed spindle alloy/temper to 6063-T6.	05/06/2014

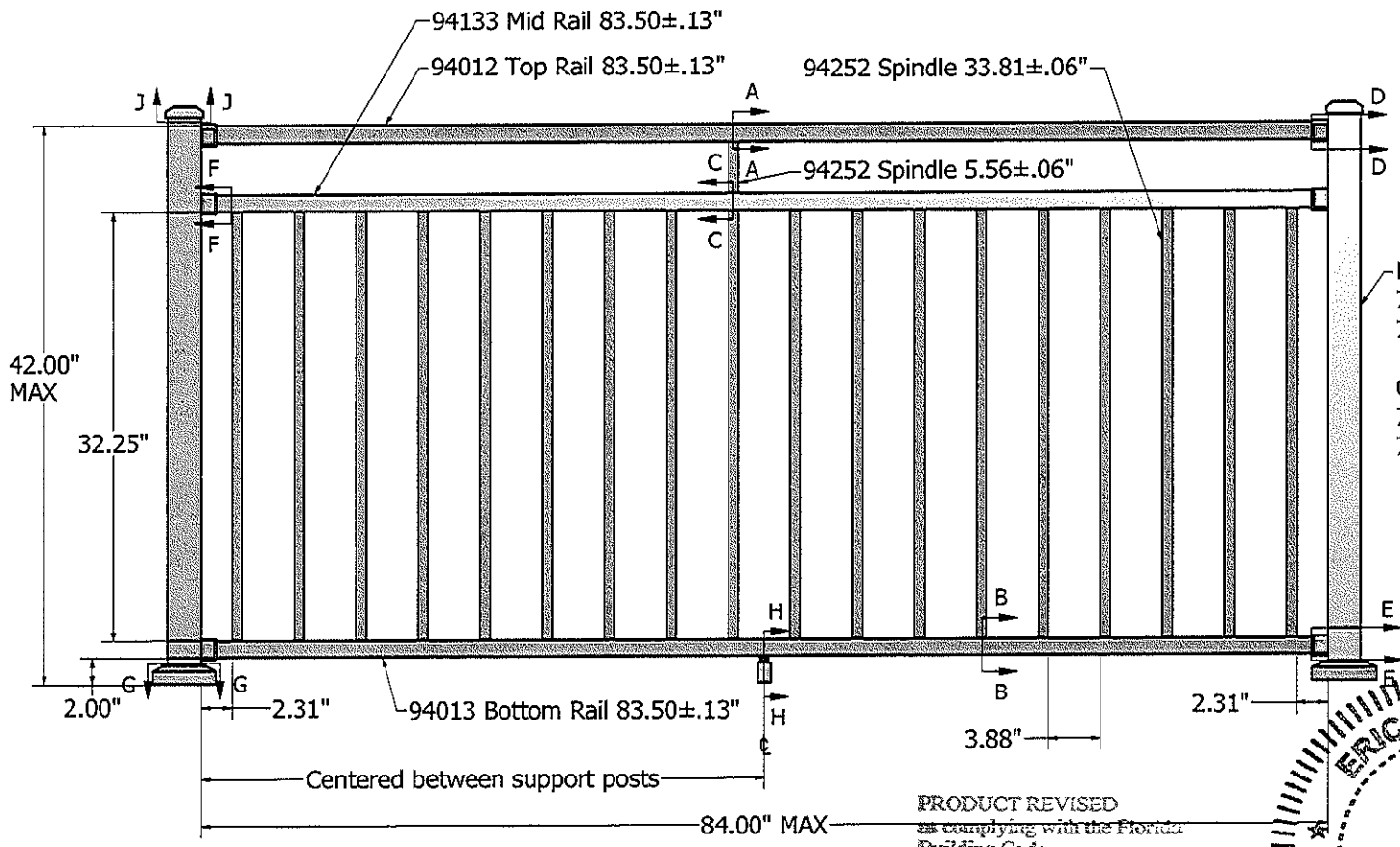

PRODUCT REVISED
as complying with the Florida
Building Code
Acceptance No 14-0515.01
Expiration Date 05/01/19
By
Miami Dade Product Control

ERIC J. TOMPOS
LICENSE
No 63511
STATE OF
FLORIDA
PROFESSIONAL ENGINEER

This guardrail assembly is in compliance with the 2010 Florida Building Code Section 1607.7.1.
Accordingly it will resist a load of 50 lb/ft applied in any direction at the top rail,
It will resist a single concentrated load of 200 lbs applied in any direction at any point along the top,
and the internal balusters will withstand a horizontally applied normal load of 50 lbs applied over 1 square foot.

MATERIAL SPECIFICATIONS		
Description	Material	Alloy/Temper
Rails	Aluminum	6005-T5
Post	Aluminum	6005-T5
Plates	Aluminum	6061-T6
Spindles	Aluminum	6063-T6
Mounts & Caps	Zinc	Zamak 3
Insterts	Polyvinyl Cloride	---

DSI Digger Specialties Inc.
3446 US 6 EAST
BREMEN, IN 46506
www.diggerspecialties.com

WEIGHT:
DRAWN BY: WJM
STANDARD TOLERANCE: .00 ±.01, .000 ±.005, ANG. ±.5°, FRACTIONS: ± 1/16"
DATE DRAWN: 4/10/2014
DRAFT NO. 20140410-1F
FILE LOC: Z:\Quality Manuals\CCRR-0163, 0202\2.1.7 Product Drawings&Changes\Westbury\Sections\C30 Sect 7ft x 42 Tall PP.idw
STYLE: Westbury Riviera C30 (QCM Version)
PART NAME: C30 Sect 7ft x 42 Tall PP.idw
PART NUMBER: 70301
REV. B

REV.	DESCRIPTION	DATE
A	Changed spindle profile number 94252; was 94025.	05/05/2014
B	Changed spindle alloy/temper to 6063-T6.	05/06/2014

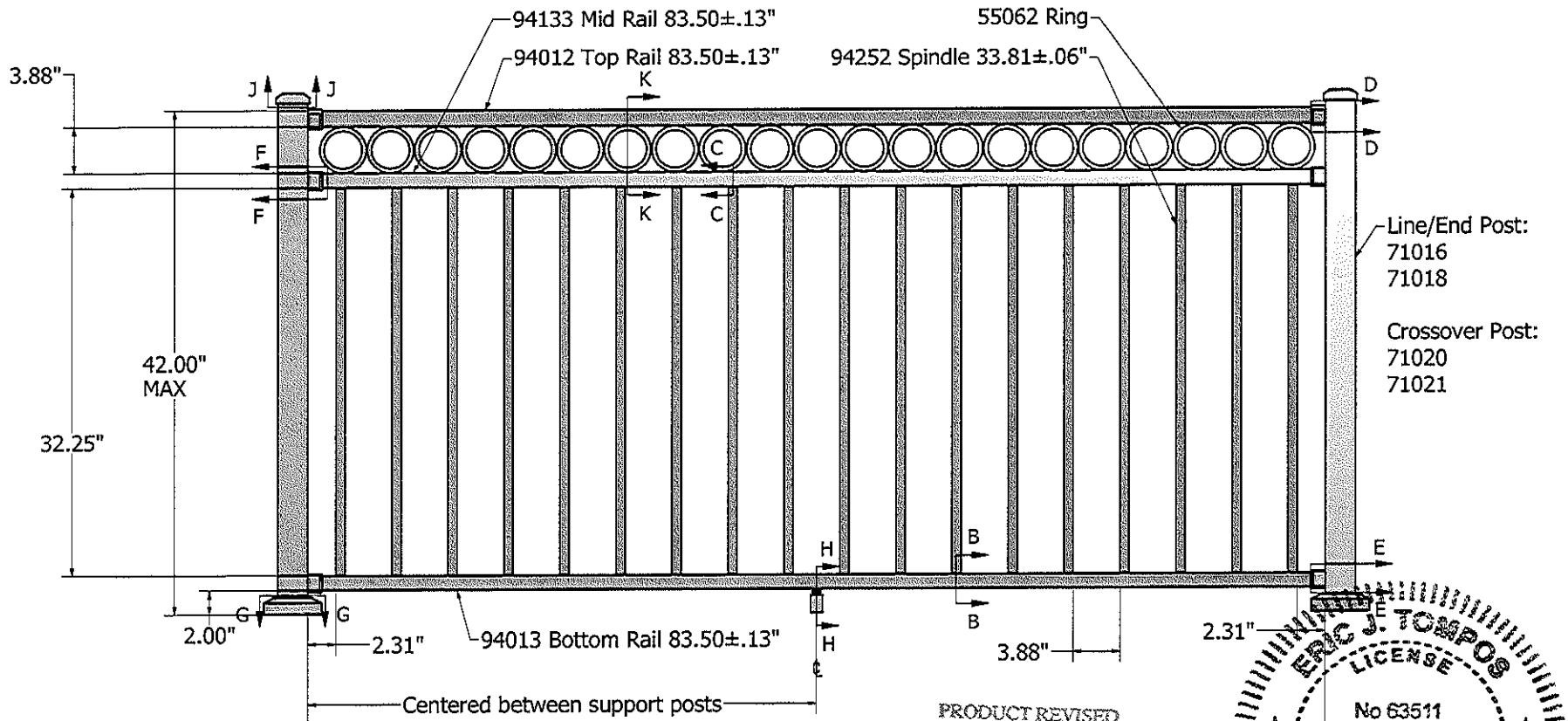

PRODUCT REVISED
as complying with the Florida Building Code
Acceptance No 14-0515.01
Expiration Date 05/01/2019
By
Miami Dade Product Control

ERIC J. TOMPOS LICENSE No 63511 STATE OF FLORIDA PROFESSIONAL ENGINEER
05/30/2014

This guardrail assembly is in compliance with the 2010 Florida Building Code Section 1607.7.1.
Accordingly it will resist a load of 50 lb/ft applied in any direction at the top rail,
It will resist a single concentrated load of 200 lbs applied in any direction at any point along the top,
and the internal balusters will withstand a horizontally applied normal load of 50 lbs applied over 1 square foot.

MATERIAL SPECIFICATIONS		
Description	Material	Alloy/Temper
Rails	Aluminum	6005-T5
Rings	Aluminum	6063-T6
Post	Aluminum	6005-T5
Plates	Aluminum	6061-T6
Spindles	Aluminum	6063-T6
Mounts & Caps	Zinc	Zamak 3
Insterts	Polyvinyl Cloride	---

DSI Digger Specialties Inc.
3446 US 6 EAST
BREMEN, IN 46506
www.diggerspecialties.com

WEIGHT:
DRAWN BY: WJM
STANDARD TOLERANCE: .00 ±.01 .000 ±.005 ANG. ±.5~ FRACTIONS: ± 1/16"
DATE DRAWN: 4/10/2014
DRAFT NO. 20140410-2F
FILE LOC: Z:\Quality Manuals\CCRR-0163, 0202\2.1.7 Product Drawings&Changes\Westbury\Sections\C30R Sect 7ft x 42 Tall PP.idw
STYLE: Westbury Riviera C30R (QCM Version)
PART NAME: C30R Sect 7ft x 42 Tall PP.idw
PART NUMBER: 70480
REV. B

REV.	DESCRIPTION	DATE
A	Changed spindle profile number 94252; was 94025.	05/05/2014
B	Changed spindle alloy/temper to 6063-T6.	05/06/2014

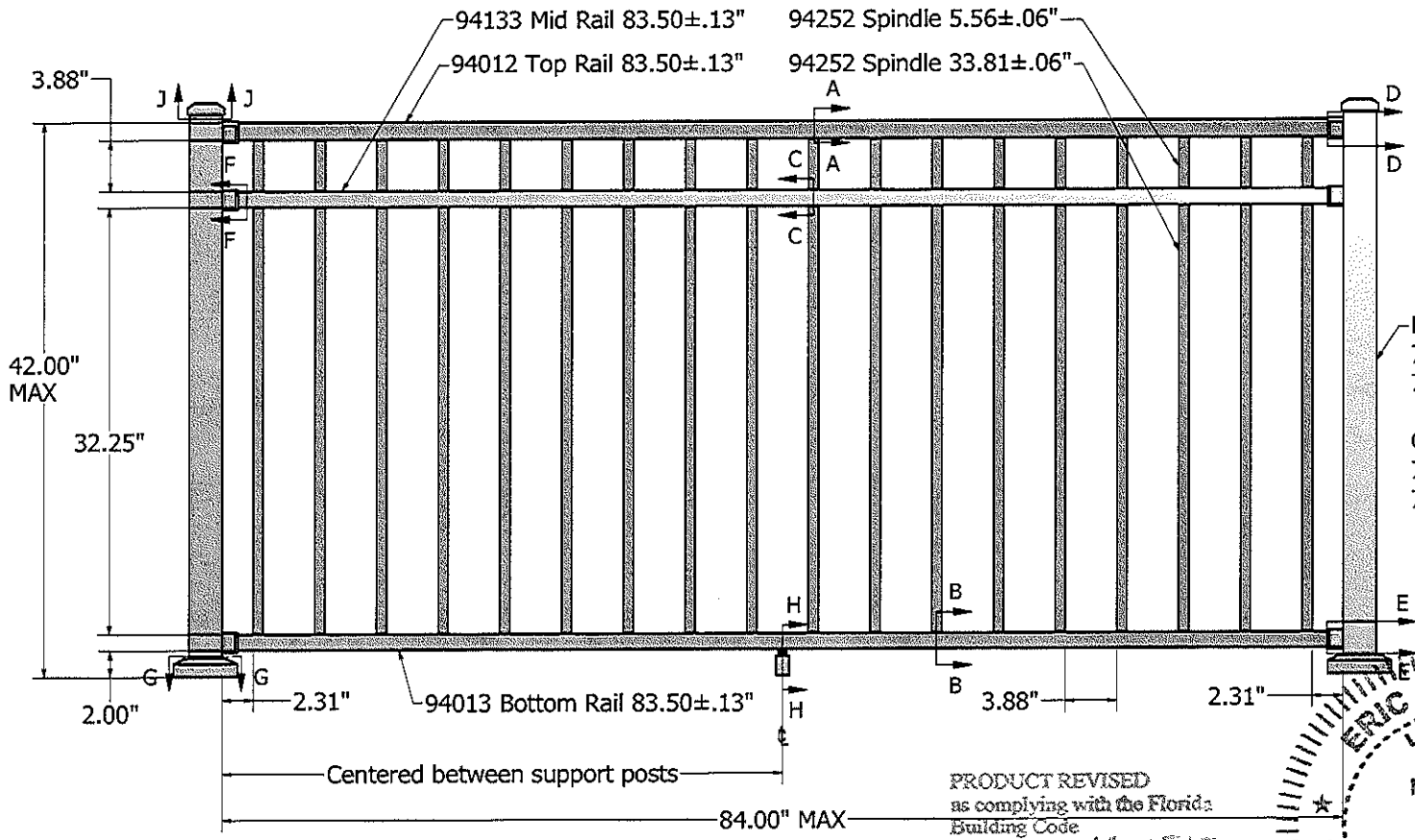

PRODUCT REVISED
as complying with the Florida
Building Code
Acceptance No 14-0515.01
Expiration Date 05/01/2019
By
Miami Dade Product Control

ERIC J. TOMPOS
LICENSE
No 63511
STATE OF
FLORIDA
PROFESSIONAL ENGINEER
5/5/14

This guardrail assembly is in compliance with the 2010 Florida Building Code Section 1607.7.1.
Accordingly it will resist a load of 50 lb/ft applied in any direction at the top rail,
It will resist a single concentrated load of 200 lbs applied in any direction at any point along the top,
and the internal balusters will withstand a horizontally applied normal load of 50 lbs applied over 1 square foot.

MATERIAL SPECIFICATIONS		
Description	Material	Alloy/Temper
Rails	Aluminum	6005-T5
Post	Aluminum	6005-T5
Plates	Aluminum	6061-T6
Spindles	Aluminum	6063-T6
Mounts & Caps	Zinc	Zamak 3
Insterts	Polyvinyl Cloride	---

DSI Digger Specialties Inc.
3446 US 6 EAST
BREMEN, IN 46506
www.diggerspecialties.com

WEIGHT:
DRAWN BY: WJM
STANDARD TOLERANCE: .00 ±.01, .000 ±.005, ANG. ±.5°, FRACTIONS: ± 1/16"
DATE DRAWN: 4/10/2014
DRAFT NO. 20140410-3F
FILE LOC: Z:\Quality Manuals\CCRR-0163, 0202\2.1.7 Product Drawings&Changes\Westbury\Sections\C31 Sect 7ft x 42 Tall PP.idw

STYLE: Westbury Riviera C31 (QCM Version)
PART NAME: C31 Sect 7ft x 42 Tall PP.idw
PART NUMBER: 70640
REV. B

REV.	DESCRIPTION	DATE
A	Changed spindle profile number 94252; was 94025.	05/05/2014
B	Changed spindle alloy/temper to 6063-T6.	05/06/2014

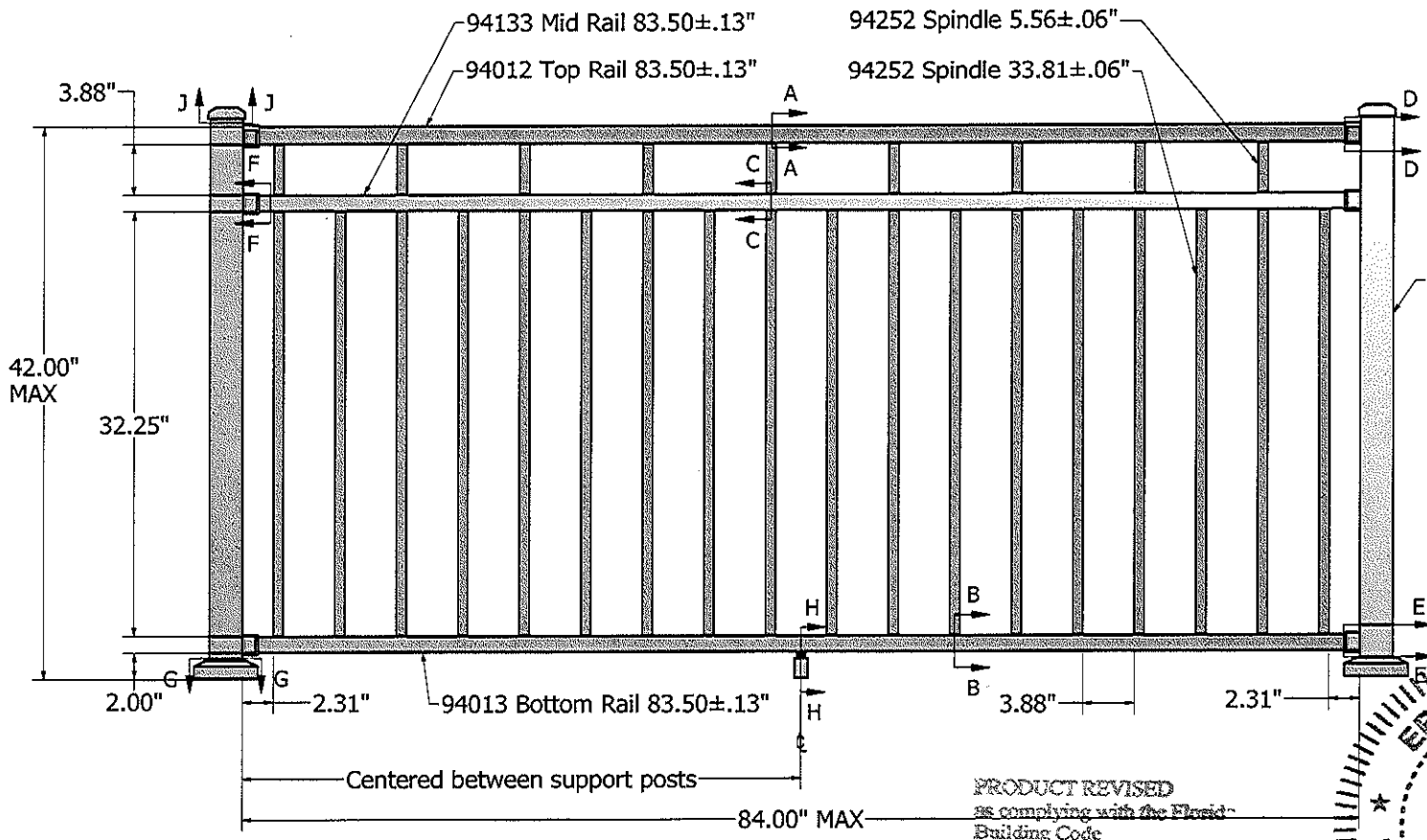

PRODUCT REVISED
as complying with the Florida
Building Code
Acceptance No 14-0515.01
Expiration Date 05/01/2019
By
Miami Dade Product Control

ERIC J. TOMPOS
LICENSE
No 63511
STATE OF
FLORIDA
PROFESSIONAL ENGINEER
5/7/2014

This guardrail assembly is in compliance with the 2010 Florida Building Code Section 1607.7.1.
Accordingly it will resist a load of 50 lb/ft applied in any direction at the top rail,
It will resist a single concentrated load of 200 lbs applied in any direction at any point along the top,
and the internal balusters will withstand a horizontally applied normal load of 50 lbs applied over 1 square foot.

MATERIAL SPECIFICATIONS		
Description	Material	Alloy/Temper
Rails	Aluminum	6005-T5
Post	Aluminum	6005-T5
Plates	Aluminum	6061-T6
Spindles	Aluminum	6063-T6
Mounts & Caps	Zinc	Zamak 3
Insterts	Polyvinyl Cloride	----

DSI Digger Specialties Inc.
3446 US 6 EAST
BREMEN, IN 46506
www.diggerspecialties.com

WEIGHT:	DRAWN BY: WJM	STYLE: Westbury Riviera C32 (QCM Version)	
STANDARD TOLERANCE: .00 ±.01, .000 ±.005, ANG. ±.5°, FRACTIONS: ± 1/16"	DATE DRAWN: 4/10/2014	PART NAME: C32 Sect 7ft x 42 Tall PP.idw	
FILE LOC: Z:\Quality Manuals\CCRR-0163, 0202\2.1.7 Product Drawings&Changes\Westbury\Sections\C32 Sect 7ft x 42 Tall PP.idw	DRAFT NO. 20140410-4F	PART NUMBER: 70803	REV. B

REV.	DESCRIPTION	DATE
A	Changed spindle profile number 94252; was 94025.	05/05/2014
B	Changed spindle alloy/temper to 6063-T6.	05/06/2014

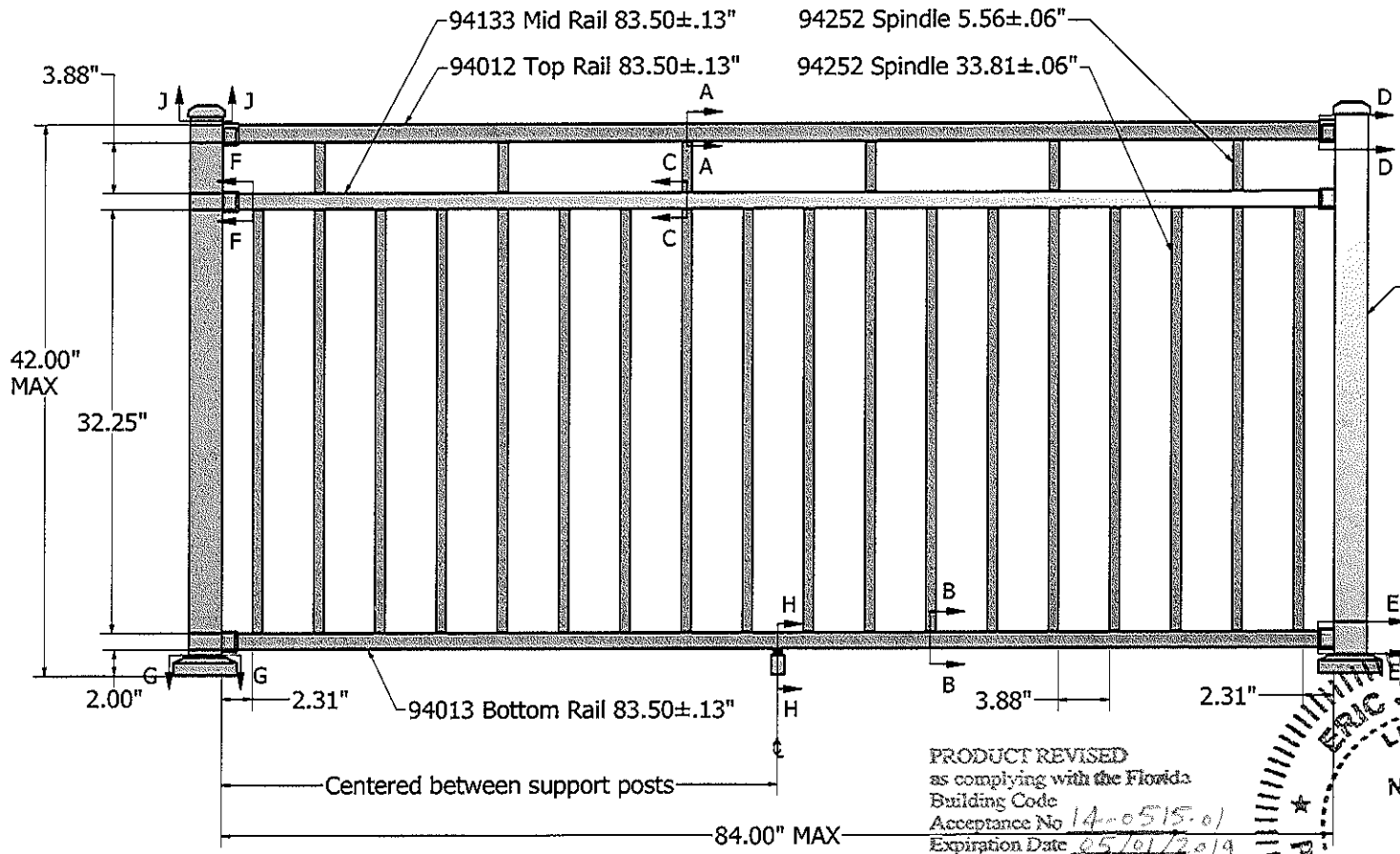

PRODUCT REVISED
as complying with the Florida
Building Code
Acceptance No 14-0515.01
Expiration Date 05/01/2019
By
Miami Dade Product Control

ERIC J. TOMPOS LICENSE No 63511 STATE OF FLORIDA PROFESSIONAL ENGINEER
5/5/2014

This guardrail assembly is in compliance with the 2010 Florida Building Code Section 1607.7.1.
Accordingly it will resist a load of 50 lb/ft applied in any direction at the top rail,
It will resist a single concentrated load of 200 lbs applied in any direction at any point along the top,
and the internal balusters will withstand a horizontally applied normal load of 50 lbs applied over 1 square foot.

MATERIAL SPECIFICATIONS		
Description	Material	Alloy/Temper
Rails	Aluminum	6005-T5
Post	Aluminum	6005-T5
Plates	Aluminum	6061-T6
Spindles	Aluminum	6063-T6
Mounts & Caps	Zinc	Zamak 3
Insterts	Polyvinyl Cloride	---

DSI Digger Specialties Inc.
3446 US 6 EAST
BREMEN, IN 46506
www.diggerspecialties.com

WEIGHT:	DRAWN BY: WJM	STYLE: Westbury Riviera C33 (QCM Version)	
STANDARD TOLERANCE: .00 ±.01, .000 ±.005, ANG. ±.5°, FRACTIONS: ± 1/16"	DATE DRAWN: 4/10/2014	PART NAME: C33 Sect 7ft x 42 Tall PP.idw	
FILE LOC: Z:\Quality Manuals\CCRR-0163, 0202\2.1.7 Product Drawings&Changes\Westbury\Sections\C33 Sect 7ft x 42 Tall PP.idw	DRAFT NO. 20140410-5F	PART NUMBER: 71061	REV. B

REV.	DESCRIPTION	DATE
A	Added callout for Spindle 5.56	04/11/2014
B	Changed spindle profile number 94252; was 94025.	05/05/2014
C	Changed spindle alloy/temper to 6063-T6.	05/06/2014

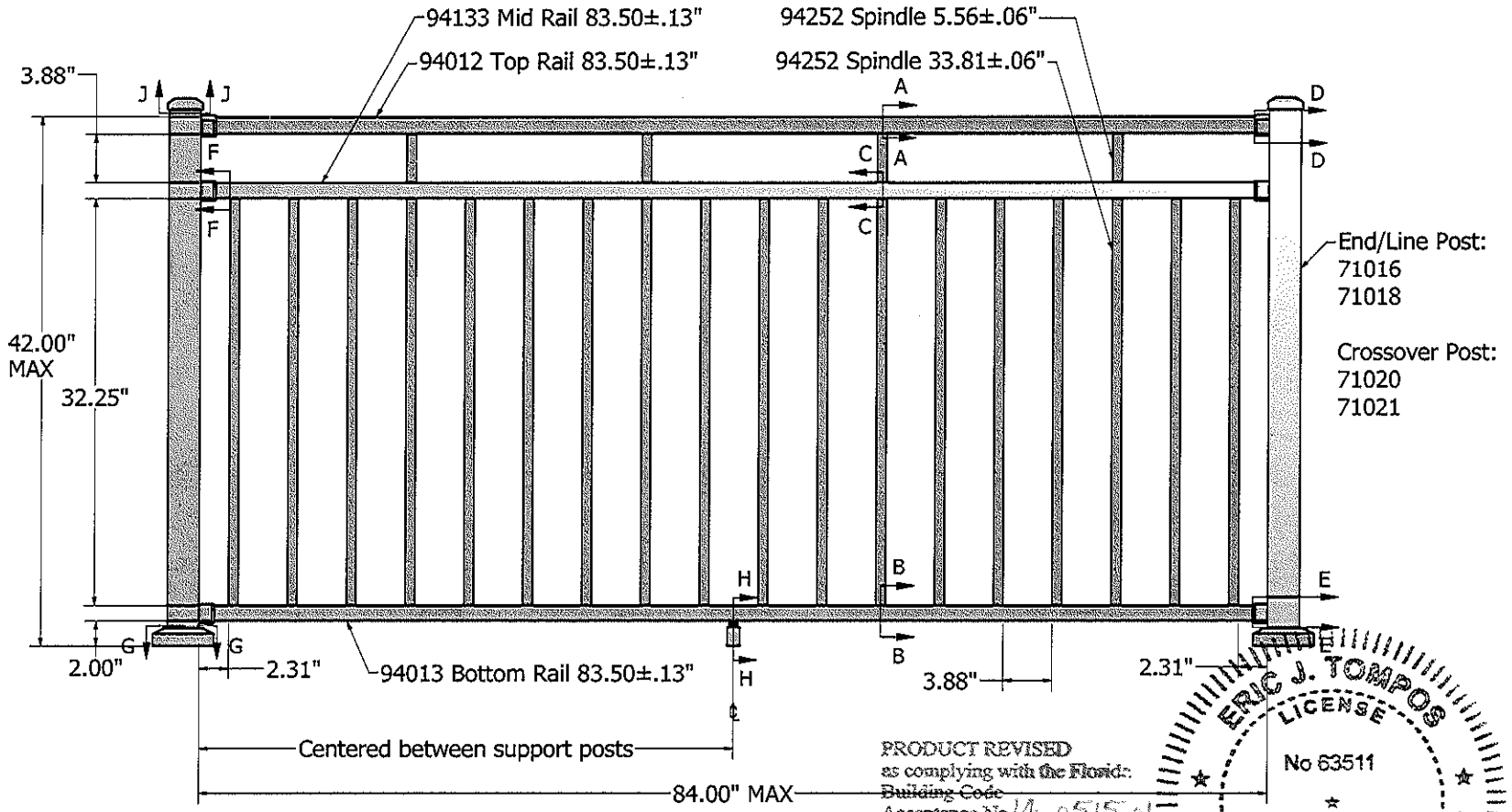

PRODUCT REVISED
as complying with the Florida
~~Building Code~~
Acceptance No 14-0515.01
Expiration Date 05/01/2019
By
Miami Dade Product Control

ERIC J. TOMPOS LICENSE No 63511 STATE OF FLORIDA PROFESSIONAL ENGINEER
05/01/2014

This guardrail assembly is in compliance with the 2010 Florida Building Code Section 1607.7.1.
Accordingly it will resist a load of 50 lb/ft applied in any direction at the top rail,
It will resist a single concentrated load of 200 lbs applied in any direction at any point along the top,
and the internal balusters will withstand a horizontally applied normal load of 50 lbs applied over 1 square foot.

MATERIAL SPECIFICATIONS		
Description	Material	Alloy/Temper
Rails	Aluminum	6005-T5
Post	Aluminum	6005-T5
Plates	Aluminum	6061-T6
Spindles	Aluminum	6063-T6
Mounts & Caps	Zinc	Zamak 3
Insterts	Polyvinyl Cloride	---

DSI Digger Specialties Inc.
3446 US 6 EAST
BREMEN, IN 46506
www.diggerspecialties.com

WEIGHT:
DRAWN BY: WJM
STANDARD TOLERANCE: .00 ±.01, .000 ±.005, ANG. ±.5~, FRACTIONS: ± 1/16"
DATE DRAWN: 4/10/2014
DRAFT NO. 20140410-6F
FILE LOC: Z:\Quality Manuals\CCRR-0163, 0202\2.1.7 Product Drawings&Changes\Westbury\Sections\C34 Sect 7ft x 42 Tall PP.idw

STYLE: Westbury Riviera C34 (QCM Version)
PART NAME: C34 Sect 7ft x 42 Tall PP.idw
PART NUMBER: 71224
REV. C

REV.	DESCRIPTION	DATE
A	Changed spindle profile number 94252; was 94025.	05/05/2014

Detail of Top Rail to Spindle connection

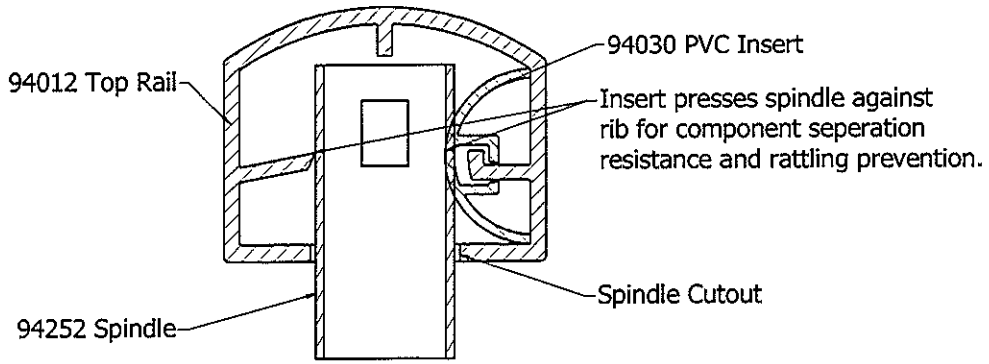

SECTION A-A

Detail of Bottom Rail to Spindle connection

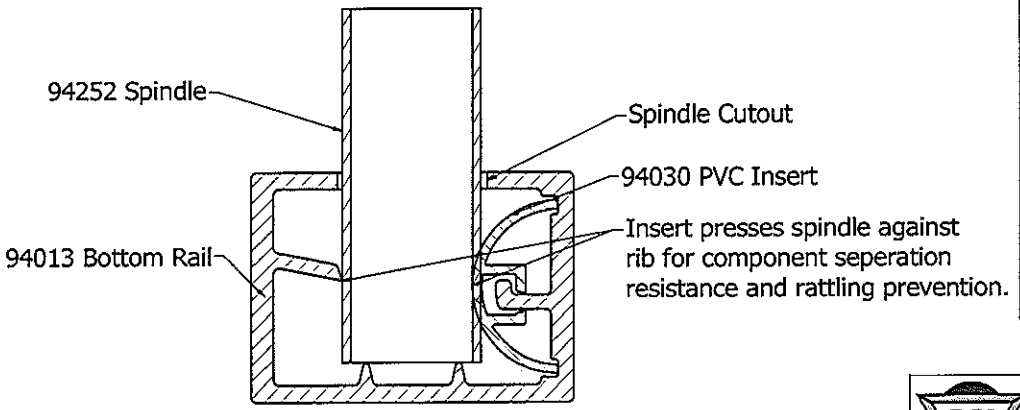

SECTION B-B

Eric J. Tompos, PE
Florida Registration No. 63511
MTA, Inc. (COA8463)
P.O. Box 490
Nappanee, IN 46550

Detail of Mid Rail to Spindle connection

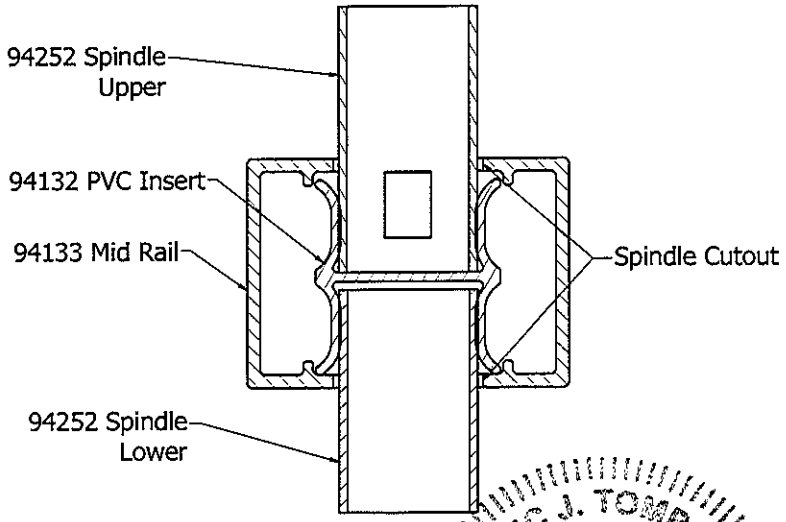

SECTION C-C

PRODUCT REVISED
as complying with the Florida Building Code
Acceptance No 14-0515.01
Expiration Date 05/01/2019
By
Miami Dade Product Control

ERIC J. TOMPOS LICENSE No 63511 STATE OF FLORIDA REGISTERED PROFESSIONAL ENGINEER

DSI Digger Specialties Inc. 3446 US 6 EAST BREMEN, IN 46506 www.diggerspecialties.com	WEIGHT:	DRAWN BY: WJM	STYLE: Westbury (QCM Version)
	STANDARD TOLERANCE: .00 ±.01, .000 ±.005, ANG. ±.5°, FRACTIONS: ± 1/16"	DATE DRAWN: 9/25/2013	PART NAME: Connection Detail, Spindle.idw
	FILE LOC: Z:\Quality Manuals\CCRR-0163, —\2.1.7 Product Drawings&Changes\Westbury\ConnectionDetails\Connection Detail, Spindle.idw	DRAFT NO. 20130925-1W	PART NUMBER: N/A / REV. A

REV.	DESCRIPTION	DATE
A	Corrected 55346 Screw part number; was 55349.	11/20/2013

Detail of Top Rail to Post connection

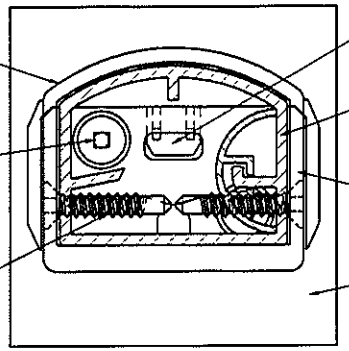

SECTION D-D

Detail of Bottom Rail to Post connection

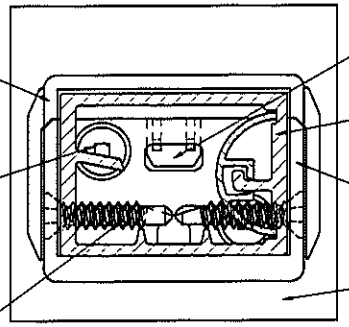

SECTION E-E

Eric J. Tompos, PE
Florida Registration No. 63511
NTA, Inc. (COA#463)
P.O. Box 490
Nappanee, IN 46550

Detail of Mid Rail to Post connection

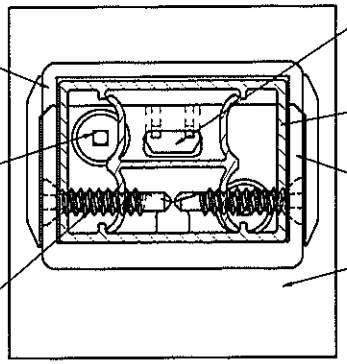

SECTION F-F

PRODUCT REVISED
as complying with the Florida
Building Code
Acceptance No 14-0515.01
Expiration Date 05/01/2019
By
Miami Dade Product Control

ERIC J. TOMPOS LICENSE No 63511 STATE OF FLORIDA PROFESSIONAL ENGINEER

DSI Digger Specialties Inc. 3446 US 6 EAST BREMEN, IN 46506 www.diggerspecialties.com	WEIGHT:	DRAWN BY: WJM	STYLE: Westbury (QCM Version)
	STANDARD TOLERANCE: .00 ±.01 .000 ±.005 ANG. ±.5° FRACTIONS: ± 1/16"	DATE DRAWN: 9/25/2013	PART NAME: Connection Detail, Rail.idw
	FILE LOC: Z:\Quality Manuals\CCRR-0163, —\2.1.7 Product Drawings&Changes\Westbury\ConnectionDetails\Connection Detail, Rail.idw	DRAFT NO. 20130925-1W	PART NUMBER: N/A REV. A

REV.	DESCRIPTION	DATE
A	Verified 55251 Flair part #. Corrected anchoring thu hole size.	11/20/2013
B	Removed anchor type 2 from anchor schedule.	04/09/2014

TABLE 1 - POST SPAN AND ANCHOR SCHEDULE			
MAXIMUM POST SPACING	RAILING HEIGHT	HOST STRUCTURE	
		2500 PSI CONCRETE	4000 PSI CONCRETE
4'-0"	36"	1	1
	42"	1	1
5'-0"	36"	1	1
	42"	1	1
6'-0"	36"	N/A	1
	42"	N/A	1
7'-0"	36"	N/A	1

ANCHOR SCHEDULE

ANCHOR TYPE 1: 3/8" DIA. HILTI HAS THREADED ROD SET IN HIT-RE 500 ADHESIVE EPOXY, 2¾" EMBEDMENT INTO CONCRETE, 3½" MIN. EDGE DISTANCE.

Eric J. Tompos, PE
Florida Registration No. 63511
NTA, Inc. (COA3453)
P.O. Box 490
Nappanee, IN 46550

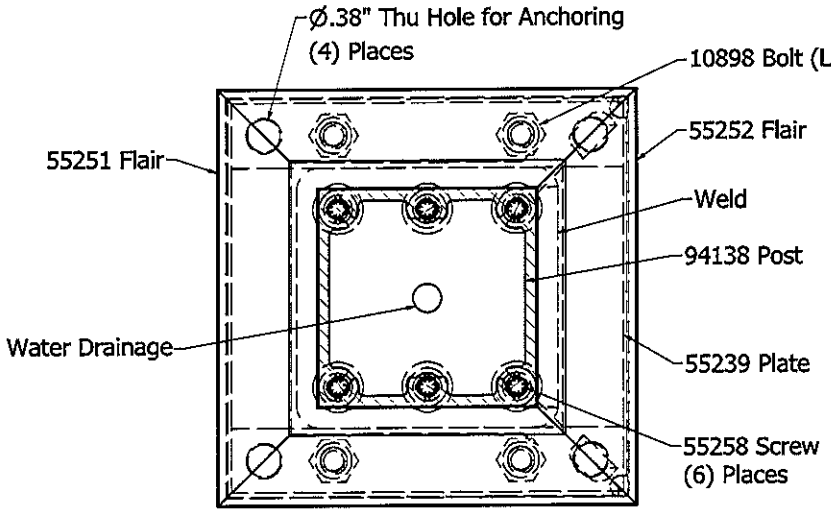

SECTION G-G

PRODUCT REVISED
as complying with the Florida Building Code
Acceptance No 14-0515.02
Expiration Date 05/01/2019
By
Miami Dade Product Control

ERIC J. TOMPOS LICENSE No 63511 STATE OF FLORIDA PROFESSIONAL ENGINEER

DSI Digger Specialties Inc. 3446 US 6 EAST BREMEN, IN 46506 www.diggerspecialties.com	WEIGHT:	DRAWN BY: WJM	STYLE: Westbury (QCM Version)
	STANDARD TOLERANCE: .00 ±.01, .000 ±.005, ANG. ±.5°, FRACTIONS: ± 1/16"	DATE DRAWN: 10/17/2013	PART NAME: Connection Detail, Anchoring.idw
	FILE LOC: Z:\Quality Manuals\CCRR-0163, —\2.1.7 Product Drawings&Changes\Westbury\ConnectionDetails\Connection Detail, Anchoring.idw	DRAFT NO. 20131017-1W	PART NUMBER: N/A / REV. B

REV.	DESCRIPTION	DATE

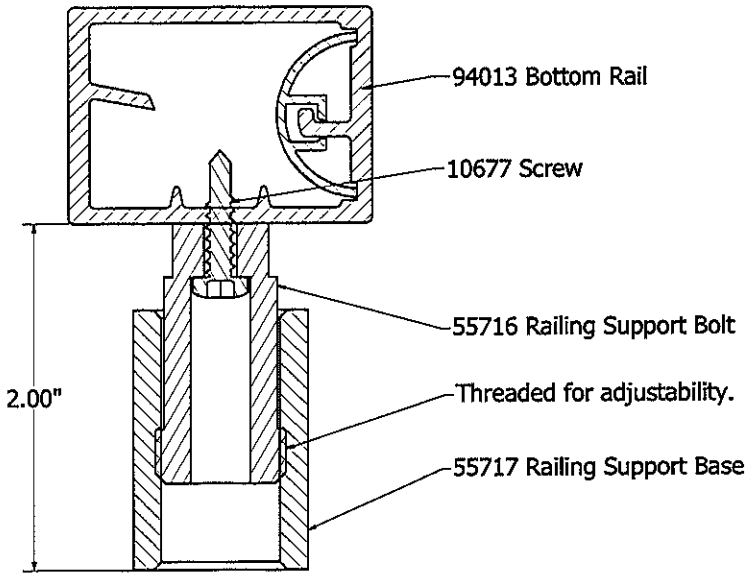

SECTION H-H

Eric J. Tompos, PE
Florida Registration No. 63511
NTA, Inc. (COA3463)
P.O. Box 490
Nappanee, IN 46550

PRODUCT REVISED
as complying with the Florida
Building Code
Acceptance No 14-0515.01
Expiration Date 05/01/2019
By [signature]
Miami Dade Product Control

ERIC J. TOMPOS
LICENSE
No 63511
STATE OF
FLORIDA
PROFESSIONAL ENGINEER

DSI Digger Specialties Inc. 3446 US 6 EAST BREMEN, IN 46506 www.diggerspecialties.com	WEIGHT:	DRAWN BY: WJM	STYLE: Westbury (QCM Version)
	STANDARD TOLERANCE: .00 ±.01 .000 ±.005 ANG. ±.5~ FRACTIONS: ± 1/16"	DATE DRAWN: 10/17/2013	PART NAME: Connection Detail, Rail Support.idw
		DRAFT NO. 20131017-2W	
	FILE LOC: Z:\Quality Manuals\CCRR-0163, ---\2.1.7 Product Drawings&Changes\Westbury\ConnectionDetails\Connection Detail, Rail Support.idw		PART NUMBER: N/A REV.

REV.	DESCRIPTION	DATE
A	Corrected cap part number.	11/20/2013

Eric J. Tompos, PE
Florida Registration No. 63511
NTA, Inc. (COR0453)
P.O. Box 430
Nappanee, IN 46550

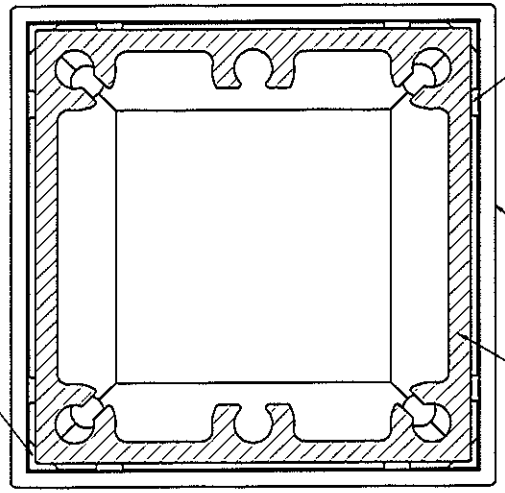

SECTION J-J

PRODUCT REVISED
as complying with the Florida
Building Code
Acceptance No 14-0515.01
Expiration Date 05/01/2019
By
Miami Dade Product Control

ERIC J. TOMPOS LICENSE No 63511 STATE OF FLORIDA PROFESSIONAL ENGINEER

DSI Digger Specialties Inc. 3446 US 6 EAST BREMEN, IN 46506 www.diggerspecialties.com	WEIGHT:	DRAWN BY: WJM	STYLE: Westbury (QCM Version)
	STANDARD TOLERANCE: .00 ±.01, .000 ±.005, ANG. ±.5°	DATE DRAWN: 10/17/2013	PART NAME: Connection Detail, Post Cap.idw
	FRACTIONS: ± 1/16"	DRAFT NO. 20131017-4W	
	FILE LOC: Z:\Quality Manuals\CCRR-0163, —\2.1.7 Product Drawings&Changes\Westbury\ConnectionDetails\Connection Detail, Post Cap.idw		PART NUMBER: N/A — REV. A

REV.	DESCRIPTION	DATE
A	Show spindle coming out of mid rail.	11/20/2013
B	Corrected annotation arrow position for pvc insert.	04/11/2014

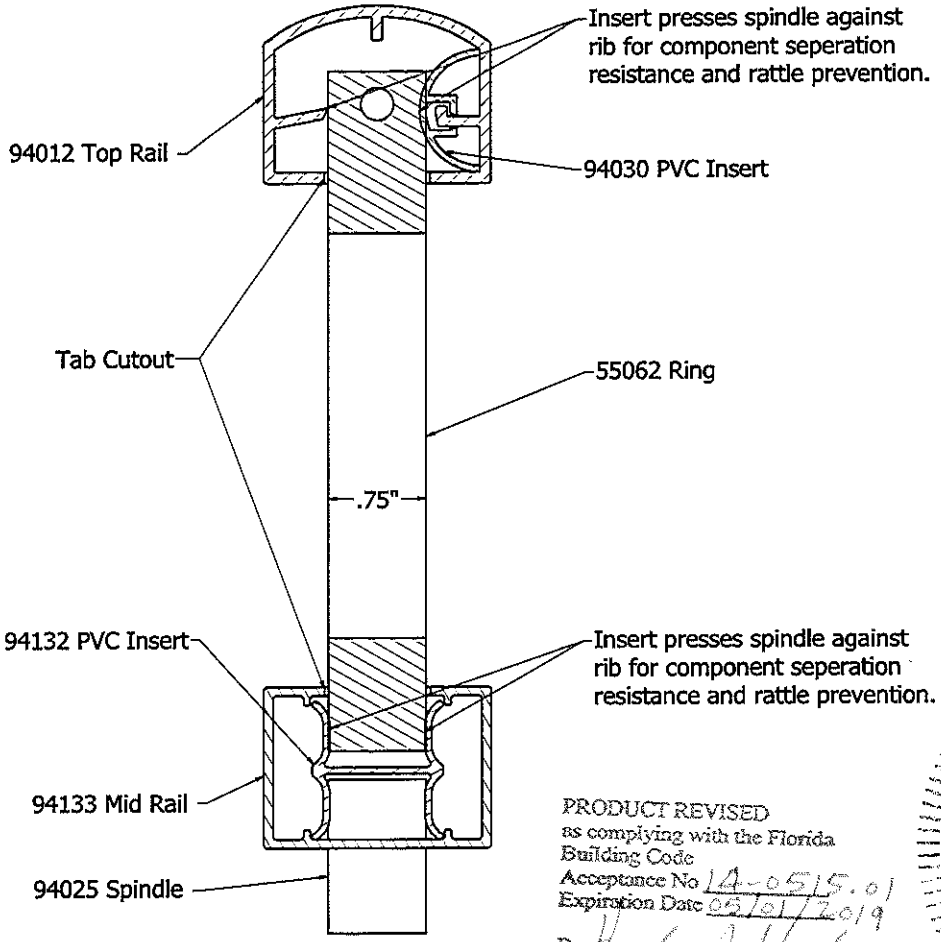

SECTION K-K

Florida Registered
NTA, Inc. (CO
P.O. Box
Nappanee, IN

PRODUCT REVISED
as complying with the Florida Building Code
Acceptance No 14-0515.01
Expiration Date 05/01/2019
By
Miami Dade Product Control

ERIC J. TOMZOS
LICENSE
No 60511
STATE OF
REGISTERED
FLORIDA
PROFESSIONAL ENGINEER

DSI Digger Specialties Inc. 3446 US 6 EAST BREMEN, IN 46506 www.diggerspecialties.com	WEIGHT:	DRAWN BY: WJM	STYLE: Westbury Riviera C30R (QCM Version)
	STANDARD TOLERANCE: .00 ±.01 .000 ±.005 ANG. ±.5° FRACTIONS: ± 1/16"	DATE DRAWN: 10/17/2013	PART NAME: Connection Detail, Ring.idw
		DRAFT NO. 20131017-3W	
	FILE LOC: Z:\Quality Manuals\CCRR-0153, —\2.1.7 Product Drawings&Changes\Westbury\ConnectionDetails\Connection Detail, Ring.idw	PART NUMBER: N/A	REV. B

PART NUMBER: 94012

REV.	REVISION	DATE
A	RELEASED TO PRODUCTION	04-18-07
B	Corrected Material Description to 6005 T5 Aluminum	09-07-10

NOTE:
1. AREA= .56 IN²
   WEIGHT= .658 LBS/FT

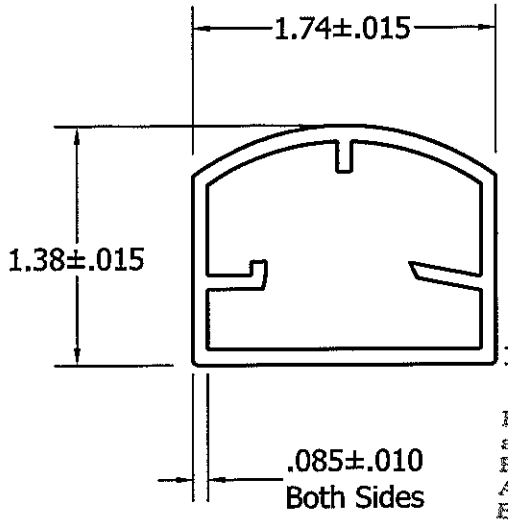

Eric J. Tompos, PE
Florida Registration No. 53511
NTA, Inc. (COA#488)
P.O. Box 490
Nappanee, IN 46550

PRODUCT REVISED
as complying with the Florida
Building Code
Acceptance No 14-0515.01
Expiration Date 05/01/2019
By
Miami Dade Product Control

ERIC J. TOMPOS LICENSE No 53511 STATE OF FLORIDA PROFESSIONAL ENGINEER

Z/Projects/Projects 2010/CCRR for Westbury Railing/Extrusion Profiles

	SHEET SIZE= A	DRAWN BY: FSB	MATERIAL: 6005 T5 Aluminum
	SCALE = N/A	DATE DRAWN: 4/18/2007	
FINISH:	STANDARD TOLERANCE: .00 `.01 .000 `.005 ANG. `.5 FRACTIONS: `1/16"	APPROVED BY: FSB	PART NAME: Westbury Top Rail
3446 US 6 EAST Bremen, IN 46506	FIRST USED ON:	DATE APPR'D: 04-18-07	PART NUMBER: 94012 QCM version / REV. B

PART NUMBER: 94013

REV.	REVISION	DATE
A	RELEASED TO PRODUCTION	1-05-07
B	Corrected Material Description to 6005 T5 Aluminum	09-07-10
C	Added internal ribs to identify bottom of rail.	06-13-13

Eric J. Tompos, PE
Florida Registration No. 63511
NTA, Inc. (CO-0455)
P.O. Box 490
Nappanee, IN 46550

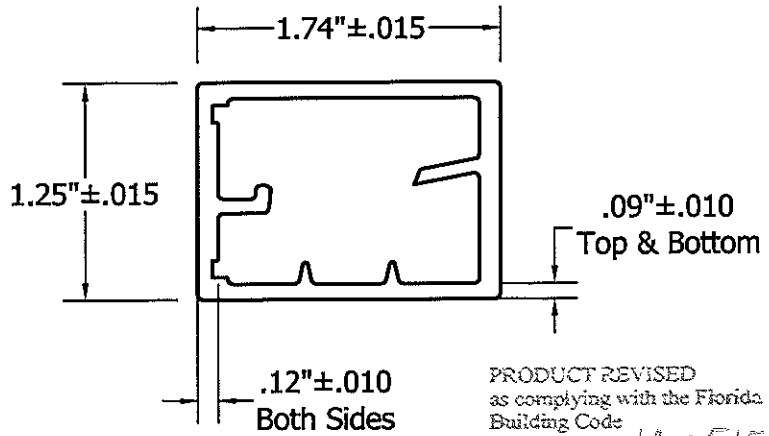

PRODUCT REVISED
as complying with the Florida
Building Code
Acceptance No 14-0515.01
Expiration Date 05/01/2019
By
Miami Dade Product Control

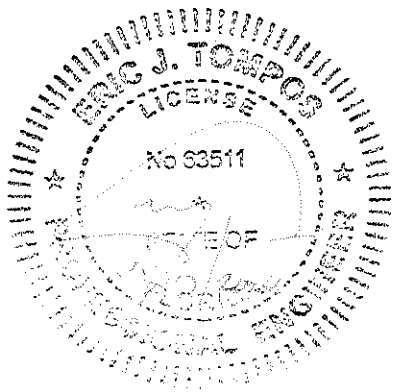

	SHEET SIZE= A	DRAWN BY: FSB	MATERIAL: 6005 T5 Aluminum
	SCALE = 1:1	DATE DRAWN: 11/28/2006	
FINISH:	STANDARD TOLERANCE: .00 ±.01 .000 ±.005 ANG. ±.5' FRACTIONS: 1/16"	APPROVED BY: WJM	PART NAME: Westbury Bottom Rail
3446 US 6 EAST Bremen, IN 46506	FIRST USED ON: AGR	DATE APPROVED: 1-05-07	PART NUMBER: 94013 QCM Version / REV. C

PART NUMBER: 94030

REV.	REVISION	DATE
A	RELEASED TO PRODUCTION	11-13-07
B	.150 WAS .160 AND .10 WAS .080	5-27-08

NOTE:
1. UNSPECIFIED RADII TO BE .010.

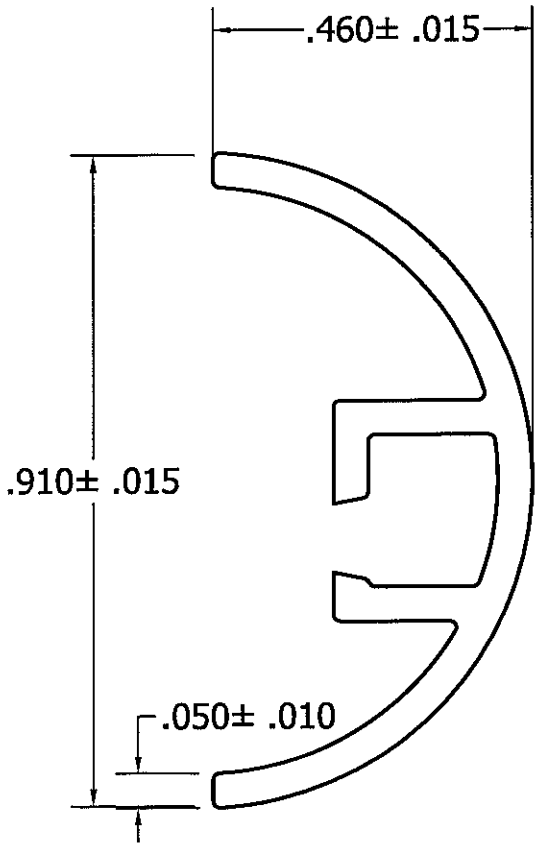

Eric J. Tompos, Inc.
Florida Registered ...
NTA, Inc. (CO ...)
P.O. Box 49...
Nappanee, IN 46550

PRODUCT REVISED
as complying with the Florida
Building Code
Acceptance No 14-0515.01
Expiration Date 05/01/2019
By [signature]
Miami Dade Product Control

ERIC J. TOMPOS
LICENSE
No 63511
PROFESSIONAL ENGINEER

WEIGHT= .058 Lbs./Ft.

FINISH:

3446 US 6 EAST
Bremen, IN 46506

SHEET SIZE= A

SCALE = 4:1

STANDARD TOLERANCE:
.00 ± .01
.000 ± .005
ANG. ± .5°
FRACTIONS: 1/16"

FIRST USED ON: C-10

DRAWN BY: fsb

DATE DRAWN: 11/13/2007

APPROVED BY: wjm

DATE APPR'D: 4-18-07

MATERIAL: RIDGED PCV
COLOR: GRAY

PART NAME: INSERT, PICKET RETENTION

PART NUMBER: 94030

REV. B

REV.	REVISION	DATE
A	RELEASED TO PRODUCTION	
B	Corrected Material Description to 6005 T5 Aluminum	09-07-10

PART NUMBER:

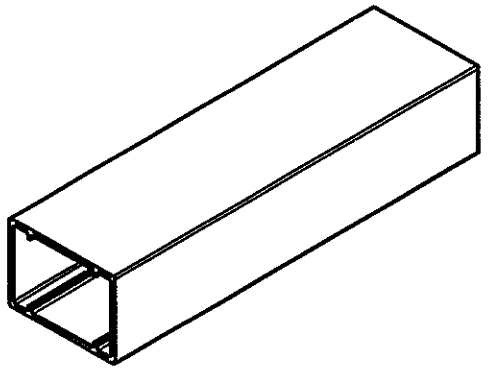

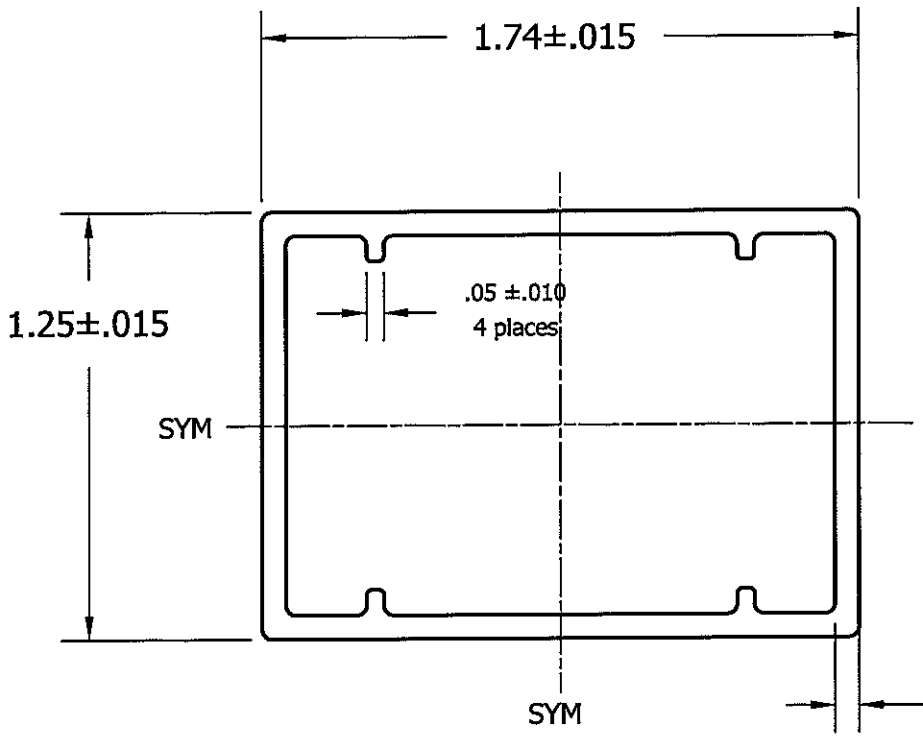

PRODUCT REVISED
as complying with the Florida Building Code
Acceptance No 14-0515.01
Expiration Date 05/01/2019
By
Miami Dade Product Control

ERIC J. TOMPOS LICENSE No 63511 STATE OF FLORIDA

Z/Projects/Projects 2010/CCRR for Westbury Railing/Extrusion Profiles

Rail Weight .498 LB/FT

Unspecified Radii to be .015"
Entire exterior exposed surface

FINISH:	SHEET SIZE= C	DRAWN BY: fsb	MATERIAL: 6005-T5 Aluminum
	SCALE =	DATE DRAWN: 11/3/2009	
	STANDARD TOLERANCE: .00 ±.01 .000 ±.005 ANG. ±.5° FRACTIONS: 1/16"	APPROVED BY:	PART NAME: Westbury Mid Rail
3446 US 6 EAST Bremen, IN 46506	FIRST USED ON:	DATE APPR'D:	PART NUMBER: 94133 QCM Version REV. B

REV.	REVISION	DATE
A	RELEASED TO PRODUCTION	

PART NUMBER:

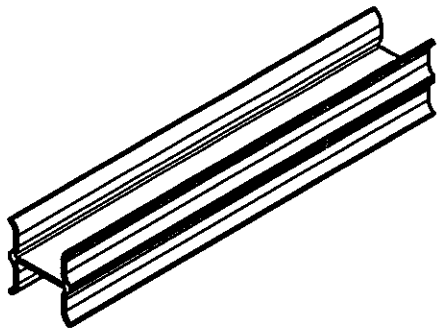

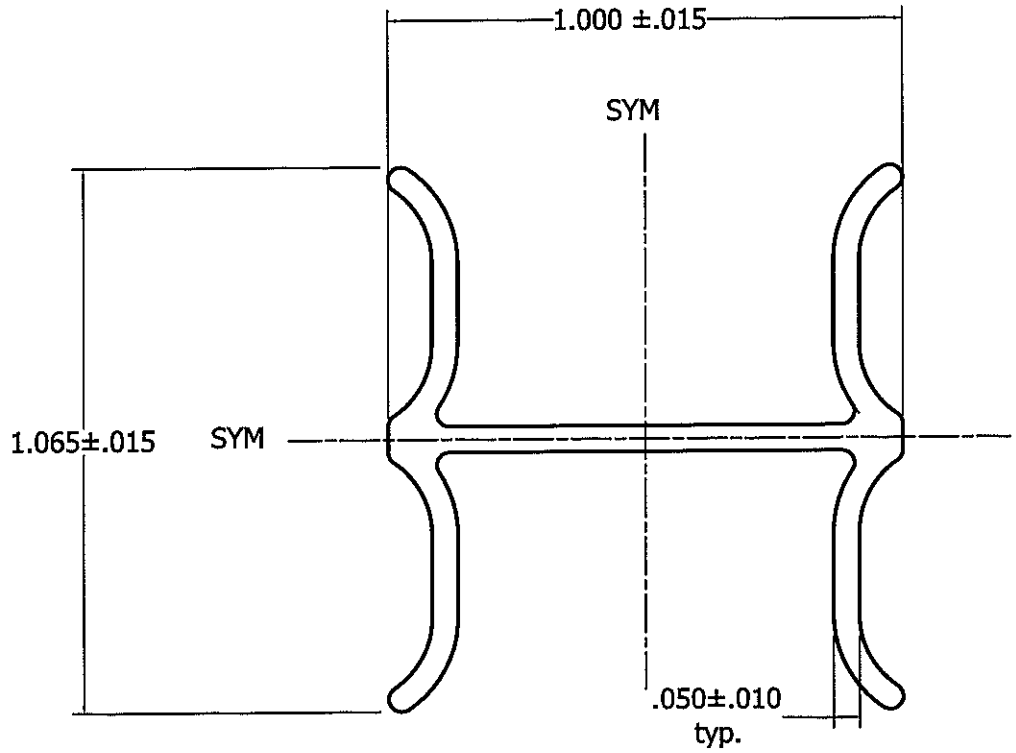

PRODUCT REVISED
as complying with the Florida
Building Code
Acceptance No 14-0515.01
Expiration Date 05/01/2019
By
Miami Dade Product Control

ERIC J. TOMPOS
LICENSE
No 53511
STATE OF
FLORIDA
PROFESSIONAL ENGINEER

NOTE:
No Exposed Surface
Unspecified Radii to be .025"

Weight .018 LB/FT

SHEET SIZE= C	DRAWN BY: wjm	MATERIAL: Ridged PVC	
SCALE =	DATE DRAWN: 11/3/2009		
FINISH:	STANDARD TOLERANCE: .00 ±.01 FRACTIONS 1/16" .000 ±.005 ANG. ±.5°	APPROVED BY:	PART NAME: Mid rail and Retainer
3446 US 6 EAST Bremen, IN 46506	FIRST USED ON:	DATE APPR'D:	PART NUMBER: 94132 PVC Insert H REV.

REV.	DESCRIPTION	DATE

Eric J. Tompos, PE
Florida Registration No. 63511
NTA, Inc. (COA#3463)
P.O. Box 490
Nappanee, IN 46550

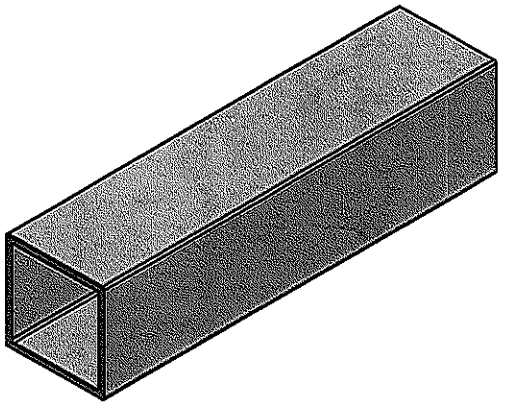

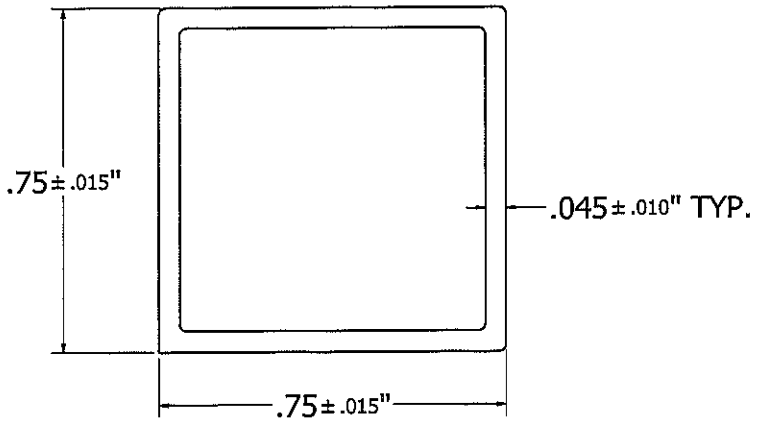

PRODUCT REVISED
as complying with the Florida
Building Code
Acceptance No 14-0515.01
Expiration Date 05/01/2019
By
Miami Dade Product Control

ERIC J. TOMPOS
LICENSE
No 63511
STATE OF
FLORIDA
PROFESSIONAL ENGINEER

Area =.127^2

DSI Digger Specialties Inc. 3446 US 6 EAST BREMEN, IN 46506 www.diggerspecialties.com	WEIGHT: .152 lb/ft.	DRAWN BY: WJM	MATERIAL: 6063-T6 Aluminum
	STANDARD TOLERANCE: .00 ' .01 .000 ' .005 ANG. ' .5~ FRACTIONS: ± 1/16"	DATE DRAWN: 3/4/2014	PART NAME: 94252 Alum Tube .75 x .045 QCM.idw
	FILE LOC: Z:\Quality Manuals\CCRR-0163, —\2.1.7 Product Drawings&Changes\Westbury\Profiles Alum\94252 Alum Tube .75 x .045 QCM.idw	DRAFT NO. 20140304-1W	PART NUMBER: Profile # 94252 REV.

REV.	REVISION	DATE
A	RELEASED TO PRODUCTION	
B	Revised per Everett	
C	Added Material Volume	01-12-2011
D	Added side holes	09/15/2011

PART NUMBER:

Eric J. Tompos, PE
Florida Registration No. 63511
NTA, Inc. (COA#3463)
P.O. Box 490
Nappanee, IN 46550

Unspecified Radii to be .010
Unspecified Draft to be 1°

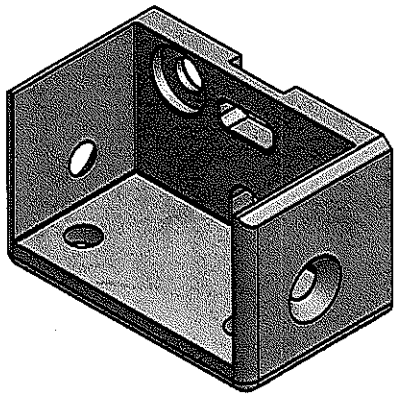

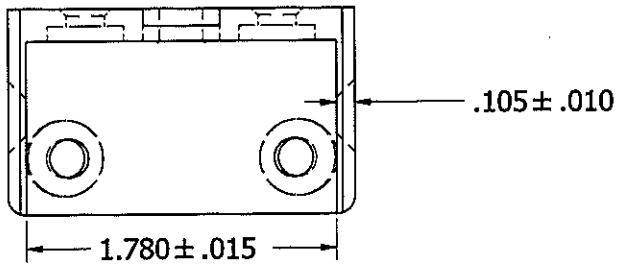

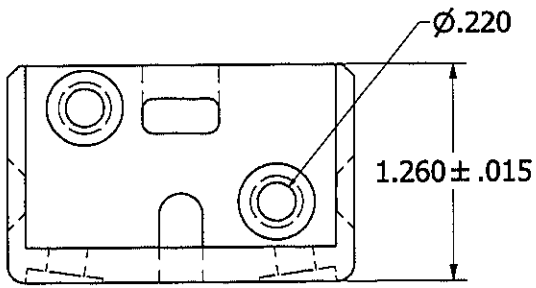

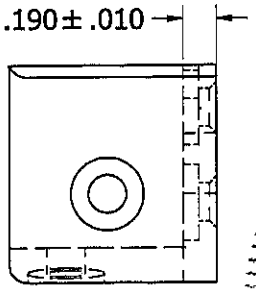

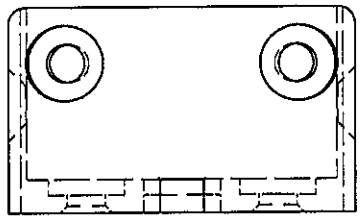

ERIC J. TOMPOS
LICENSE
No 63511
STATE OF
FLORIDA
PROFESSIONAL ENGINEER

PRODUCT REVISED
as complying with the Florida
Building Code
Acceptance No 14-0515.01
Expiration Date 06/01/2019
By
Miami Dade Product Control

LOC _ Z:/Aluminum/Components/Alum Railing Section Mounts/Zinc Westbury Mounts

	SHEET SIZE= C	DRAWN BY: FSB	MATERIAL: Zamak 3 (Zinc)
	SCALE =	DATE DRAWN: 4/14/2010	
FINISH:	STANDARD TOLERANCE: .00 ±.01 Fraction .000 ±.005 ANG. ±.5°	APPROVED BY:	PART NAME: Westbury Rail Mount W/ Side Holes
3446 US 6 EAST Bremen, IN 46506	FIRST USED ON:	DATE APPR'D:	PART NUMBER: 55214 WB Rail Mnt Base W/ Side Holes — REV. D

REV.	REVISION	DATE
A	Made sides .95" wide (was 1.00")	03/13/2012

All unspecified radii to be .015"

Eric J. Tompos, PE
Florida Registration No. 63511
NTA, Inc. (COA#453)
P.O. Box 490
Nappanee, IN 46550

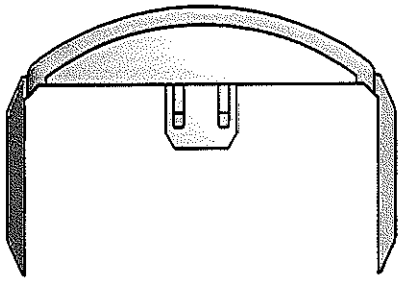

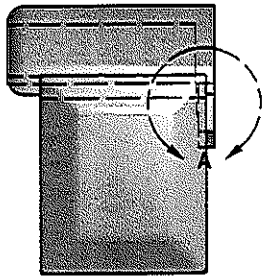

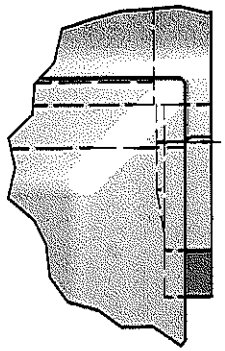

DETAIL A
SCALE 6 : 1

(Part is SYM)

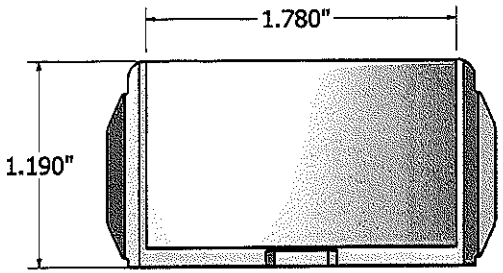

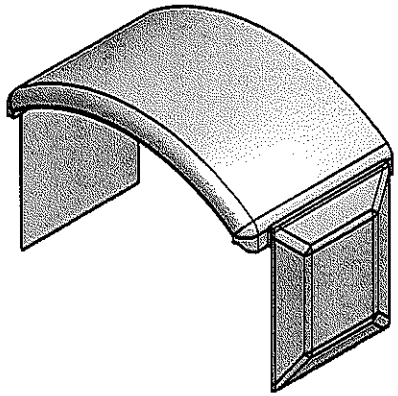

ERIC J. TOMPOS
LICENSE
No 63511
STATE OF
FLORIDA
PROFESSIONAL ENGINEER

PRODUCT REVISED
as complying with the Florida
Building Code
Acceptance No 14-0515.01
Expiration Date 05/01/2019
By
Miami Dade Product Control

DSI Digger Specialties Inc.	WEIGHT:	DRAWN BY: fsb	MATERIAL: Zamak 3 (Zinc)
3446 US 6 EAST BREMEN, IN 46506 www.diggerspecialties.com	STANDARD TOLERANCE: .00 ±.01 .000 ±.005 ANG. ±.5~ FRACTIONS: ± 1/16	DATE DRAWN: 3/13/2012 DRAFT NO. 20120201-1	PART NAME: Rail Mount Cover (Top)
	FILE LOC: Z:\QC Manuals 1-ICC 2-CCRR\CCRR For WestBury Railing\CCRR Reports 0163\Applications for Renewal\2012\55352 WB Rail Mount Top Side Cover.idw		PART NUMBER: 55352 REV. A

REV.	REVISION	DATE
A	Made sides .95" wide (was 1.00")	03/13/2012

All unspecified radii to be .015"

Eric J. Tompos, PE
Florida Registration No. 63511
NTA, Inc. (COA#463)
P.O. Box 490
Nappanee, IN 46550

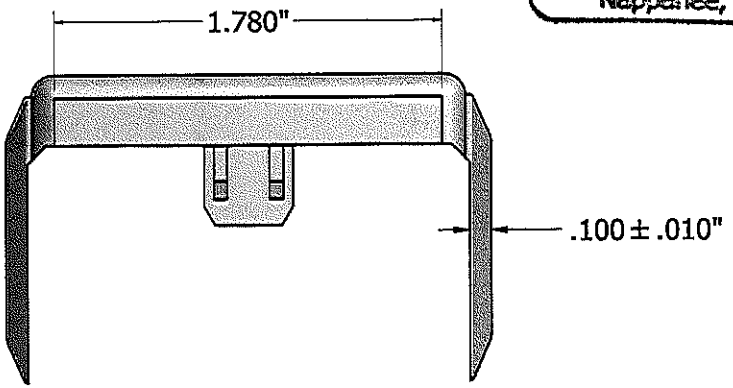

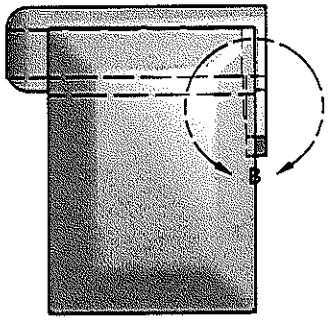

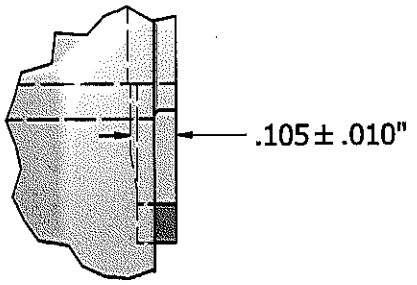

DETAIL B
SCALE 5 : 1

(Part is SYM)

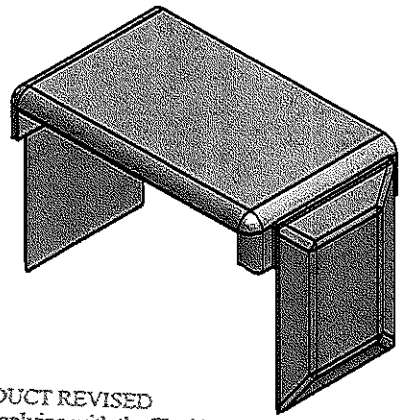

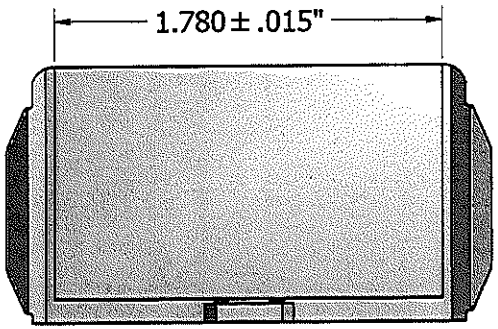

ERIC J. TOMPOS
LICENSE
63511
STATE OF
FLORIDA
PROFESSIONAL ENGINEER

PRODUCT REVISED
as complying with the Florida
Building Code
Acceptance No 14-0515.01
Expiration Date 05/01/2019
By
Miami Dade Product Control

DSI Digger Specialties Inc. 3446 US 6 EAST BREMEN, IN 46506 www.diggerspecialties.com	WEIGHT:	DRAWN BY: fsb	MATERIAL: Zamak 3 (Zinc)
	STANDARD TOLERANCE: .00 ± .01 .000 ± .005 ANG. ± .5° FRACTIONS: ± 1/16"	DATE DRAWN: 3/13/2012 DRAFT NO. 20120201-1	PART NAME: Rail Mount Cover (Bottom)
	FILE LOC: Z:\QC Manuals 1-ICC 2-CCRR\CCRR For WestBury Railing\CCRR Reports 0163\Applications for Renewal\2012\55237 WB Rail Mount Bottom Side Cover.idw		PART NUMBER: 55237 REV. A

REV.	REVISION	DATE
A	RELEASED TO PRODUCTION	

PART NUMBER:

Eric J. Tompos, PE
Florida Registration No. 63511
NTA, Inc. (COA6453)
P.O. Box 490
Nappanee, IN 46550

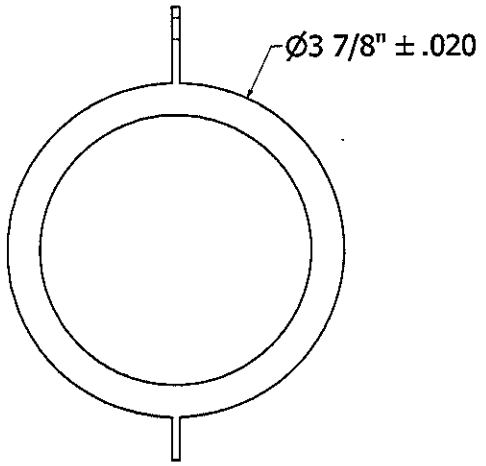

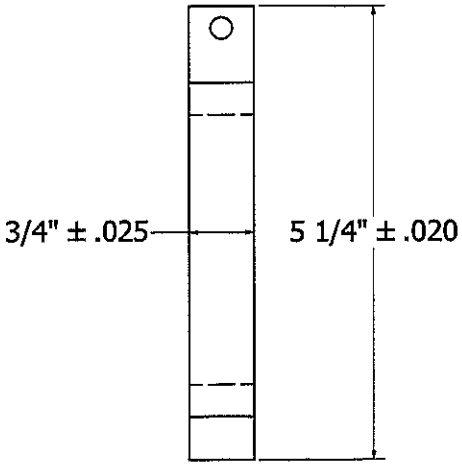

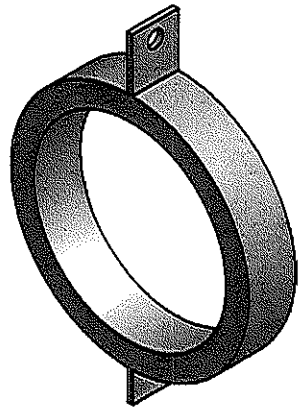

PRODUCT REVISED
as complying with the Florida
Building Code
Acceptance No 14-0715.01
Expiration Date 05/01/2019
By
Miami Dade Product Control

ERIC J. TOMPOS
LICENSE
STATE OF FLORIDA
PROFESSIONAL ENGINEER

SHEET SIZE= C	DRAWN BY: fsb	MATERIAL: Aluminum 6063-T6	
SCALE =	DATE DRAWN: 11/11/2009		
FINISH:	STANDARD TOLERANCE: .00 ±.01 FRACTIONS .000 ±.005 ±1/16" ANG. ±.5°	APPROVED BY:	PART NAME: Riviera Ring
DSI Diggers Specialties, Inc. 3446 US 6 EAST Bremen, IN 46506	FIRST USED ON:	DATE APPR'D:	PART NUMBER: 55062 Ring 3.865 Tabbed detail REV.

LOC: Z:\Quality Manuals\CCRR-0163, ----\QCM Ready Parts Prints\55062 Ring 3.865 tabbed QCM.idw

PART NUMBER:

REV.	REVISION	DATE
A	RELEASED TO PRODUCTION	
B	Listed allowable alloys	02-17-2011

Eric J. Tompos, PE
Florida Registration No. 63511
NTA, Inc. (COA3453)
P.O. Box 490
Nappanee, IN 46550

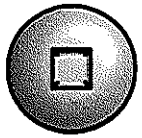

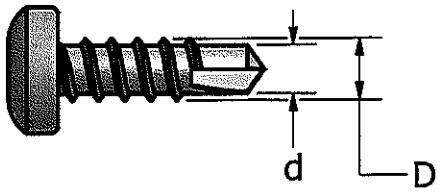

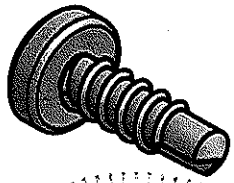

Nominal Size	10
Basic Screw Diameter	.185
Threads Per Inch	16
Major Diameter	(D) .18
Minor Diameter	(d) .14
Tolerance on length	±.05
Tolerance on Major/Minor Diameter	±.02

PRODUCT REVISED
as complying with the Florida
Building Code
Acceptance No 14-0515.01
Expiration Date 05/01/2019
By
Miami Dade Product Control

ERIC J. TOMPOS LICENSE No 63511 STATE OF FLORIDA PROFESSIONAL ENGINEER

Material: A Stainless Steel Screw shall be made from one of the following austenitic alloys: 304(A2), 305, 316(A4), 384, XM7

	SHEET SIZE= A	DRAWN BY: FSB	MATERIAL: 18-8 Stainless Steel (See material note)
	SCALE = 1:1	DATE DRAWN: 7/20/2010	
FINISH: Z:\QC Manuals 1-ICC 2-CCRR\CCRR WestBury & TREX\Screws QCM Ready\10 x .625 TEK Pan Head.idw	STANDARD TOLERANCE: .00 ±.01 FRACTIONS: .000 ±.005 ANG. ±.5° ±1/16"	APPROVED BY:	PART NAME: #10 x 5/8" Self Drilling Screw
DSI Digger Specialties, Inc. 3446 US 6 EAST Bremen, IN 46506	FIRST USED ON: Westbury	DATE APPR'D:	PART NUMBER: 55346 REV. B

PART NUMBER:

REV.	REVISION	DATE
A	RELEASED TO PRODUCTION	
B	Listed allowable alloys.	02-17-2011
C	Added dimensions to screw	03-03-2011

Eric J. Tompos, P
Florida Registration
NTA, Inc. (COA
P.O. Box 490
Nappanee, IN 46550

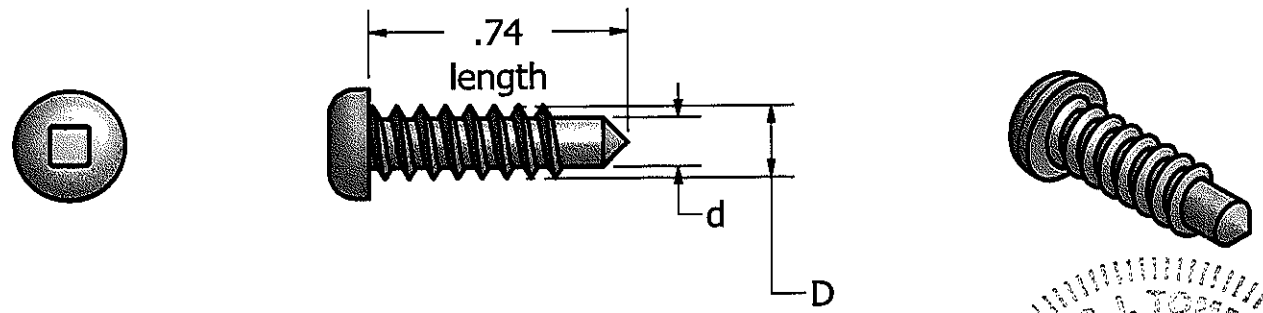

Nominal Size	8
Basic Screw Diameter	.164
Threads Per Inch	18
Major Diameter	(D) .16
Minor Diameter	(d) .12
Tolerance on length	±.05
Tolerance on Major/Minor Diameter	±.02

PRODUCT REVISED
as complying with the Florida
Building Code
Acceptance No 14-0515.01
Expiration Date 05/01/2019
By
Miami Dade Product Control

ERIC J. TOMPOS
LICENSE
No 15511
STATE OF
FLORIDA
PROFESSIONAL ENGINEER

Material: A Stainless Steel Screw shall be made from one of the following austenitic alloys: 304(A2), 305, 316(A4), 384, XM7

	SHEET SIZE= A	DRAWN BY: FSB	MATERIAL: 18-8 Stainless Steel (See material Note)
	SCALE = 1:1	DATE DRAWN: 12/8/2010	
FINISH: LOC: Z:\QC Manuals 1-ICC 2-CCRR\CCRR For WestBury Railing\Screws QCM Ready\8 X .75 Pan Head Self Tap.ipt	STANDARD TOLERANCE: .00 ±.01 .000 ±.005 ANG. ±.5° FRACTIONS: ±1/16"	APPROVED BY:	PART NAME: #8 x 3/4" Self Drilling Screw
DSI Digger Specialties Inc. 3446 US 6 EAST Bremen, IN 46506	FIRST USED ON: Westbury	DATE APPR'D:	PART NUMBER: 10677 REV. C

REV.	REVISION	DATE
A	RELEASED TO PRODUCTION	

PART NUMBER:

Eric J. Tompos, PE
Florida Registration No. 63511
NTA, Inc. (COA-453)
P.O. Box 490
Nappanee, IN 46550

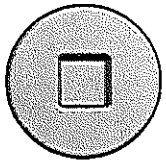

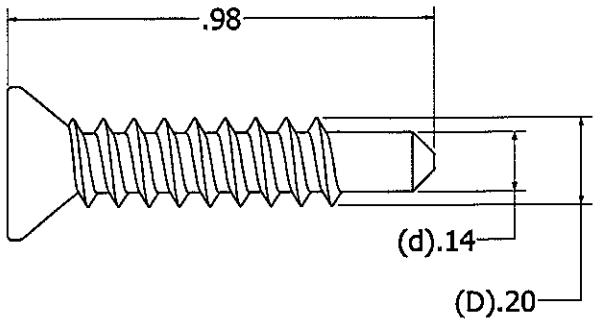

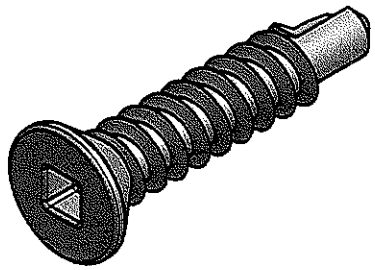

10 x 1 Square Flat "A" SS (18-8)

Nominal Size	10
Basic Screw Diameter	.190
Threads Per Inch	15
Major Diameter	(D) .20
Minor Diameter	(d) .14
Tolerance on length	±.05
Tolerance on Major/Minor Diameter	±.02

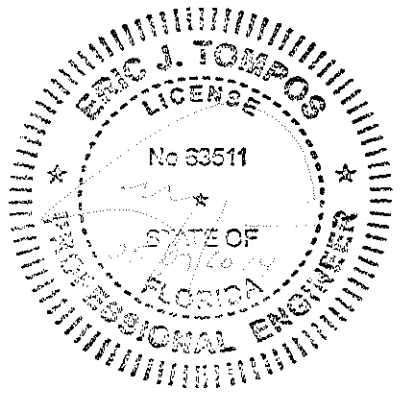

PRODUCT REVISED
as complying with the Florida
Building Code
Acceptance No 14-0515.01
Expiration Date 05/01/2019
By
Miami Dade Product Control

Material: A Stainless Steel Screw shall be made from one of the following austenitic alloys: 304(A2), 305, 316(A4), 384, XM7

DSI Digger Specialties Inc. 3446 US 6 EAST BREMEN, IN 46506 www.diggerspecialties.com	WEIGHT:	DRAWN BY: wjm	MATERIAL: 18-8 Stainless Steel (See Material Note)
	STANDARD TOLERANCE: .00 ±.01 .000 ±.005 ANG. ±.5° FRACTIONS: ± 1/16"	DATE DRAWN: 1/12/2011	PART NAME: 10 x 1 Screw
	DRAFT NO.	APPROVED BY: DATE APP'D:	PART NUMBER: 10562 REV.
		FILE LOC. Z:\QC Manuals 1-10\2-CCRR\CCRR For WestBury Rating\CCRR Reports 0103\Applications for Renewal\2012\10 x 1 Flat PHillips.idw	

REV.	DESCRIPTION	DATE
A	RELEASED TO PRODUCTION	
B	Replaced measurements with letters.	08/12/2010
C	Reduced thread amount easing adjustablity w/powdercoat.	09/17/2012

Eric J. Tompos, PE
Florida Registration No. 63511
NTA, Inc. (COA#463)
P.O. Box 490
Nappanee, IN 46550

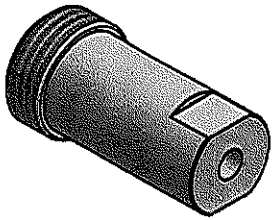

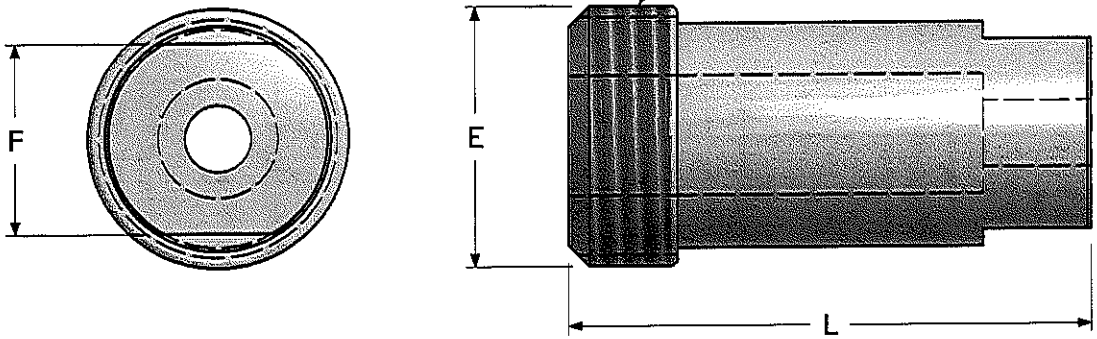

Dimensions		Nominal	Max	Min
Length	L	1-1/2"(1.50)	(1.55)	(1.45)
Body Diameter	E	3/4" (.75)	(.775)	(.725)
Width Across Flat	F	9/16" (.563)	(.588)	(.538)

PRODUCT REVISED
as complying with the Florida
Building Code
Acceptance No 14-0515.01
Expiration Date 05/01/2019
By
Miami Dade Product Control

ERIC J. TOMPOS LICENSE No 63511 STATE OF FLORIDA PROFESSIONAL ENGINEER

SHEET SIZE= C	DRAWN BY: fsb	MATERIAL: Aluminum 6061-T6	
SCALE =	DATE DRAWN: 8/9/2010		
WEIGHT:	STANDARD TOLERANCE: .00 ±.01 .000 ±.005 ANG. ±.5° FRACTIONS: ± 1/16"	APPROVED BY:	PART NAME: 55716 Railing Support Bolt QCM.idw
3446 US 6 EAST Bremen, IN 46506	FIRST USED:	DATE APPR'D:	PART NUMBER: 55716 REV. C

Z:\QC Manuals 1-ICC 2-CCRR\CCRR For WestBury Railing\QCM Ready Parts Prints\55716 Railing Support Bolt QCM.idw

PART NUMBER:

REV.	REVISION	DATE
A	RELEASED TO PRODUCTION	
B	Changed measurements to letters	08/12/10

Eric J. Tompos, PE
Florida Registration No. 63511
NTA, Inc. (CO46453)
P.O. Box 490
Nappanee, IN 46550

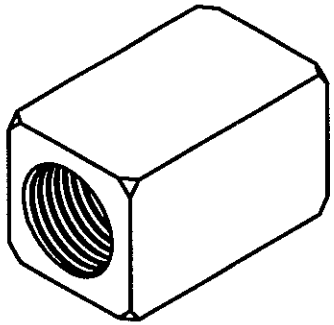

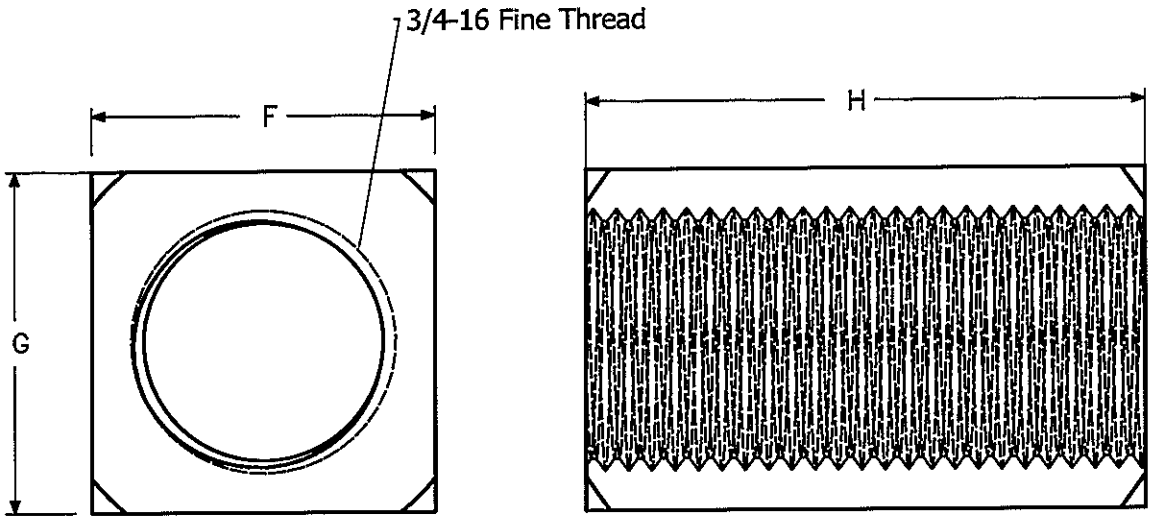

Dimensions		Nominal -	Max	Min
Width Across Flat	F	1" (1.00)	(1.05)	(.95)
Width Across Flat	G	1" (1.00)	(1.05)	(.95)
Nut Thickness	H	1-5/8" (1.63)	(1.73)	(1.53)

PRODUCT REVISED
as complying with the Florida
Building Code
Acceptance No 14-0515.01
Expiration Date 05/01/2019
By
Miami Dade Product Control

ERIC J. TOMPOS LICENSE No 63511 STATE OF FLORIDA PROFESSIONAL ENGINEER

SHEET SIZE= C	DRAWN BY: fsb	MATERIAL: Aluminum 6061-T6	
SCALE =	DATE DRAWN: 8/9/2010		
WEIGHT:	STANDARD TOLERANCE: .00 ±.01, .000 ±.005, ANG. ±.5°, FRACTIONS: ± 1/16"	APPROVED BY:	PART NAME: 55717 Rail Support Base
3446 US 6 EAST Bremen, IN 46506	FIRST USED:	DATE APPR'D:	PART NUMBER: 55717 REV. B

LOC: Z/Projects/Projects 2010/CCRR for Westbury Railing/QCM Ready Prints

REV.	DESCRIPTION	DATE
A	RELEASED TO PRODUCTION	
B	Added length tolerance.	08/18/2010
C	Added welding notes.	09/09/2010
D	Corrected alloy to 6005-T5.	09/10/2010
E	Added welding notes.	03/14/2011
F	Screw length verified.	03/15/2011
G	Removed material note in title block.	07/26/2013
H	Added part number notes; plate, screw, and extrusion.	11/18/2013

Eric J. Tompos, PE
Florida Registration No. 63511
NTA, Inc. (COA8453)
P.O. Box 490
Nappanee, IN 46550

ERIC J. TOMPOS LICENSEE No 63511 STATE OF FLORIDA PROFESSIONAL ENGINEER

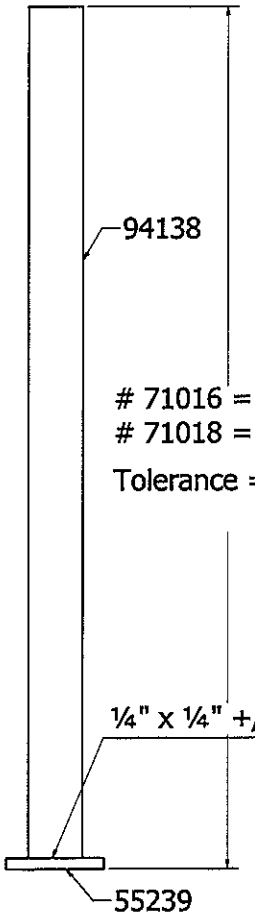

71016 = 37" Power Post (for 36" Tall Rail)
71018 = 43" Power Post (for 42" Tall Rail)

Tolerance = ± 1/16"

¼" x ¼" +/- 1/16"

Welded all 4 sides full length to plate with 3/64" ER 5356 wire

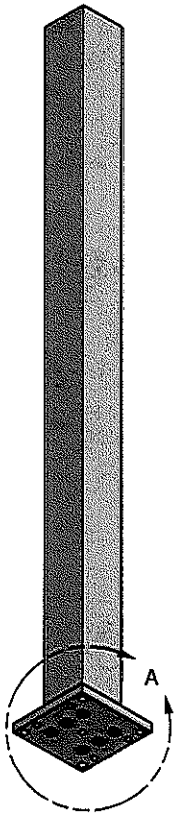

Post and plate must be free of dirt and grease before welding

Weld sides of post to plate in numbered sequence.

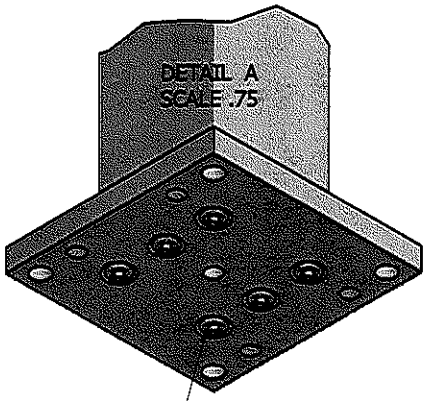

55258 #14 SS Screws (6 req.)

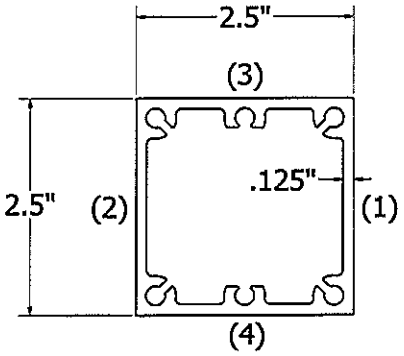

Post must be set to have bottom screw line parallel with rail line.

PRODUCT REVISED
as complying with the Florida Building Code
Acceptance No 14-0515.01
Expiration Date 5/01/2019
By
Miami Dade Product Control

WEIGHT:	SHEET SIZE= C	DRAWN BY: wjm	
	SCALE =	DATE DRAWN: 8/12/2010	PART NAME: Power Post 2 1/2"
	STANDARD TOLERANCE: .00 ±.01 .000 ±.005 ANG. ±5° FRACTIONS: ± 1/16"	APPROVED BY:	
3446 US 6 EAST Bremen, IN 46506	FIRST USED:	DATE APPR'D:	PART NUMBER: 71016 & 71018 Power Post REV. H

Z:\Aluminum\Components\Post Mounts, Welded Plates\2.5" Sq. Post\Power Post\71016 & 71018 Power Post.idw

Eric J. Tompos, PE
Florida Registration No. 63511
NTA, Inc. (COA8463)
P.O. Box 490
Nappanee, IN 46550

ERIC J. TOMPOS LICENSE No 63511 STATE OF FLORIDA PROFESSIONAL ENGINEER

REV.	DESCRIPTION	DATE
A	RELEASED TO PRODUCTION	
B	Corrected length of power post and alum tube	01/25/2011
C	Added welding notes.	03/14/2011
D	Screw length verified.	03/15/2011
E	Screw, Plate, Tube Part #'s verfied.	11/20/2013

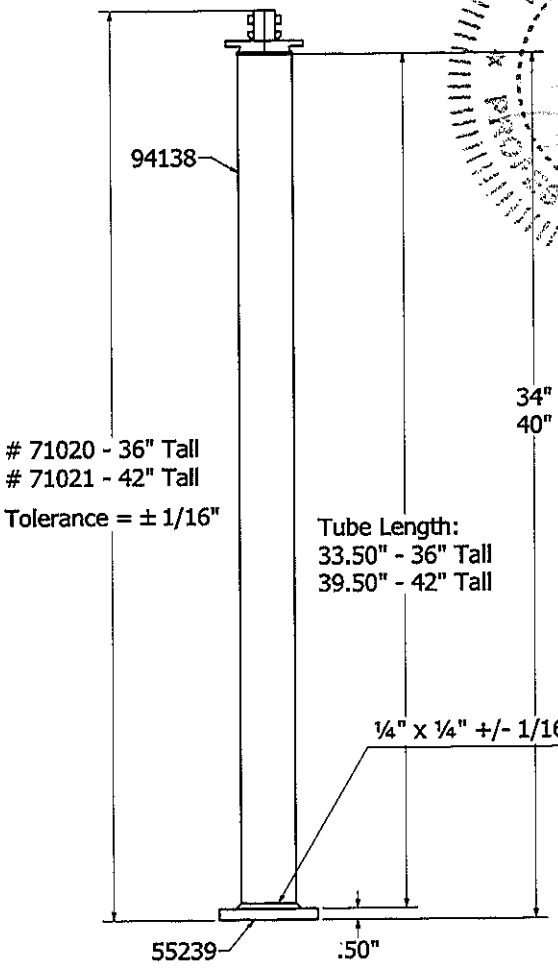

Welded all 4 sides full length to plate with 3/64" ER 5356 wire

Post and plate must be free of dirt and grease before welding

Weld sides of post to plate in numbered sequence shown.

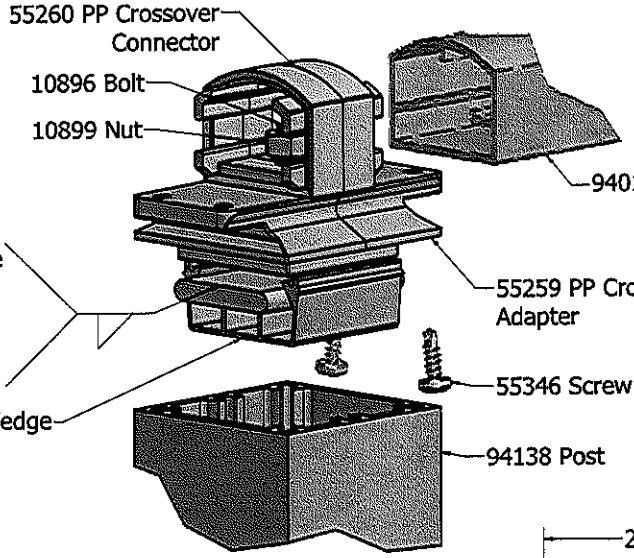

PRODUCT REVISED
as complying with the Florida Building Code
Acceptance No 14-0515.01
Expiration Date 05/01/2019
By
Miami Dade Product Control

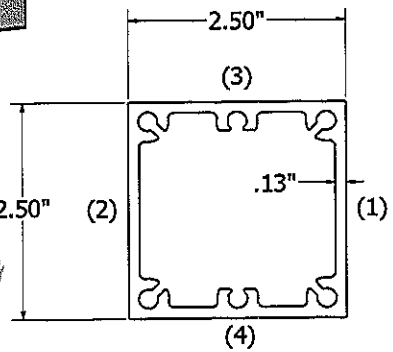

Post must be set to have bottom screw line parallel with rail line.

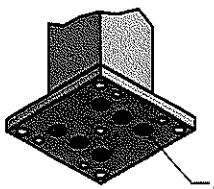

55258 #14 SS Screws (6 req.)
Min length 2".

DSI Digger Specialties Inc.
3446 US 6 EAST
BREMEN, IN 46506
www.diggerspecialties.com

WEIGHT:	DRAWN BY: FSB	MATERIAL:
STANDARD TOLERANCE: .00 ±.01, .000 ±.005, ANG. ±.5°, FRACTIONS: ± 1/16"	DATE DRAWN: 12/30/2010	PART NAME: 71020 -71021 PP Crossover.Idw
FILE LOC: Z:\Aluminum\Components\Post Mounts, Welded Plates\2.5" Sq. Post\Power Post\71020 -71021 PP Crossover.Idw	DRAFT NO. 20101230-1F	PART NUMBER: 71020 (36" Tall) 71021 (42" Tall) REV. E

REV.	REVISION	DATE
A	RELEASED TO PRODUCTION	
B	Corrected Material Description to 6005 T5	09-07-10

PART NUMBER:

Eric J. Tompos, PE
Florida Registration No. 63511
NTA, Inc. (COA#463)
P.O. Box 490
Nappanee, IN 46550

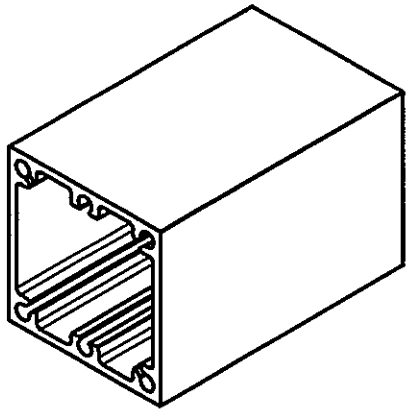

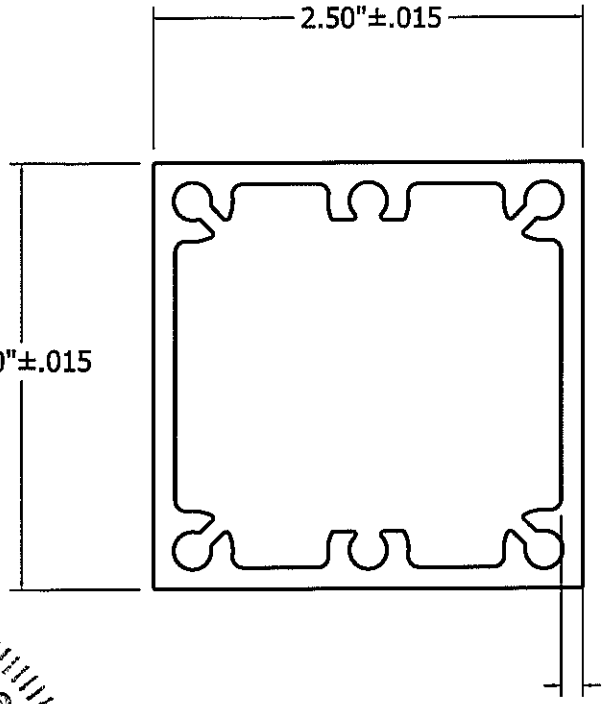

All Exterior surfaces exposed

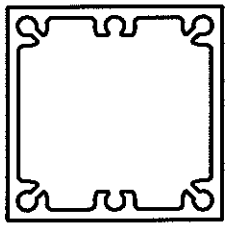

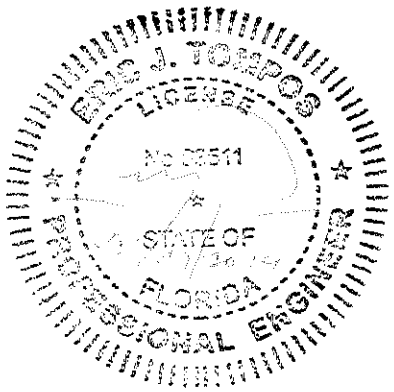

PRODUCT REVISED
as complying with the Florida
Building Code
Acceptance No 14-0515.01
Expiration Date 05/01/2019
By
Miami Dade Product Control

LOC: Z/Projects/Projects 2010/CCRR For Westbury Railing/QCM Ready Extrusion Profiles

Weight 1.810 LB/FT

SHEET SIZE= C	DRAWN BY: wjm	MATERIAL: Aluminum 6005-T5	
SCALE =	DATE DRAWN: 11/24/2009		
FINISH:	STANDARD TOLERANCE: .00 ±.01, .000 ±.005, ANG. ±.5° FRACTIONS: 1/16"	APPROVED BY:	PART NAME: 2.5 x .125 Post w/scr chan
3446 US 6 EAST Bremen, IN 46506	FIRST USED ON: Westbury	DATE APPR'D:	PART NUMBER: 94138 QCM Version REV. B

PART NUMBER:

REV.	REVISION	DATE
A	RELEASED TO PRODUCTION	
B	Listed allowable alloys.	02-17-2011

Eric J. Tompos, PE
Florida Registration No. 63511
NTA, Inc. (COA#453)
P.O. Box 490
Nappanee, IN 46550

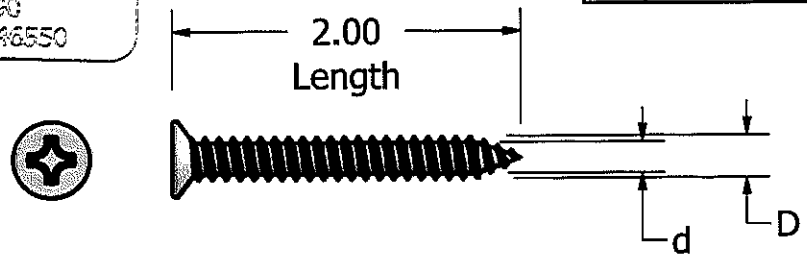

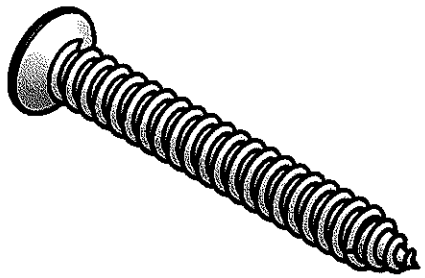

Nominal Size	#14
Basic Screw Diameter	.25
Threads Per Inch	14
Major Diameter	(D) .244
Minor Diameter	(d) .190
Tolerance on length	.05

PRODUCT REVISED
as complying with the Florida
Building Code
Acceptance No 14-0515.01
Expiration Date 05/01/2019
By
Miami Dade Product Control

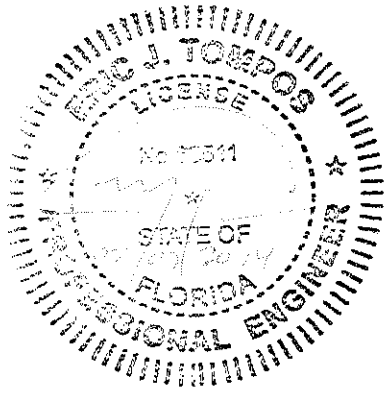

Material: A Stainless Steel Screw shall be made from one of the following austenitic alloys: 304(A2), 305, 316(A4), 384, XM7

SHEET SIZE= A	DRAWN BY: FSB	MATERIAL: 18-8 Stainless Steel (See material note)	
SCALE = 1:1	DATE DRAWN: 1/12/2011		
FINISH: LOC: Z/Projects/Projects 2010 /CCRR for Westbury/Screws	STANDARD TOLERANCE: .00 ±.01 FRACTIONS: .000 ±.005 ANG. ±.5° ±1/16"	APPROVED BY:	PART NAME: 1/4" x 2" Sheet Metal Screw
DSI Digger Specialties, Inc. 3446 US 6 EAST Bremen, IN 46506	FIRST USED ON: Westbury	DATE APPR'D:	PART NUMBER: 55258 REV. B

REV.	REVISION	DATE
A	RELEASED TO PRODUCTION	

PART NUMBER:

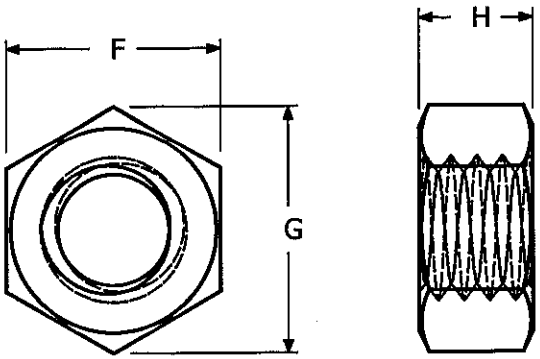

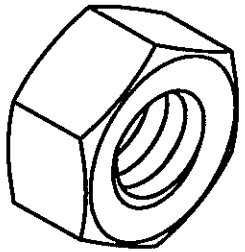

Dimensions		Nominal	Max	Min
Width Across Flat	F	1/2"	(.510)	(.490)
Width Across Corner	G	9/16"	(.573)	(.553)
Nut Thickness	H	1/4"	(.280)	(.250)

Material: Nut shall be made from one of the following austenitic alloys. 303, 303Se, 304, XM7, all of which are characterized as having a chromium content of 17-19% and nickel content of 8-10%.

Eric J. Tompos, PE
Florida Registration No. 63511
NTA, Inc. (CCRR53)
P.O. Box 490
Nappanee, IN 46550

PRODUCT REVISED
as complying with the Florida
Building Code
Acceptance No 14-0915.01
Expiration Date 05/01/2019
By
Miami Dade Product Control

ERIC J. TOMPOS
LICENSE
No. 63511
STATE OF
FLORIDA
PROFESSIONAL ENGINEER

SHEET SIZE= C	DRAWN BY: fsb	MATERIAL: 18-8 Stainless Steel	
SCALE =	DATE DRAWN: 8/6/2010		
WEIGHT:	STANDARD TOLERANCE: .00 ±.01, .000 ±.005, ANG. ±.5°, FRACTIONS: ± 1/16	APPROVED BY:	PART NAME: 5/16" Hex Nut
3446 US 6 EAST Bremen, IN 46506	FIRST USED:	DATE APPR'D:	PART NUMBER: 10899 Nut REV.

LOC: Z/Projects/Projects 2010/CCRR for Westbury Railing/QCM Ready Prints

REV.	REVISION	DATE
A	RELEASED TO PRODUCTION	
B	Added alloy to description	11-19-10

PART NUMBER:

Eric J. Tompos, PE
Florida Registration No. 63511
NTA, Inc. (CC#3453)
P.O. Box 490
Nappanee, IN 46550

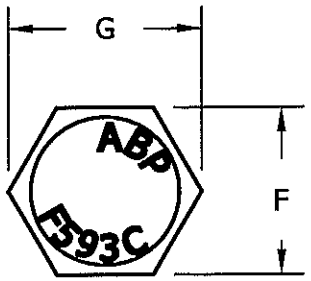

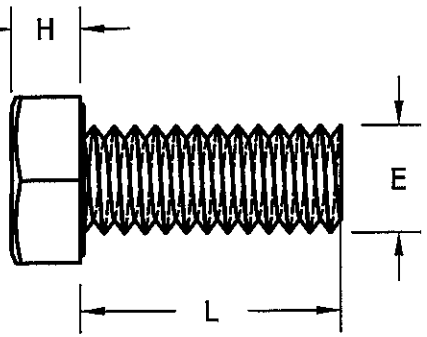

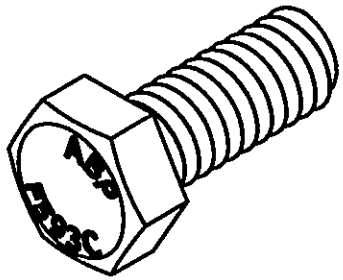

PRODUCT REVISED
as complying with the Florida
Building Code
Acceptance No 14-0515.01
Expiration Date 02/01/19
By
Miami Dade Product Control

Dimensions		Nominal	Max	Min
Length	L	3/4"	(.775)	(.725)
Body Dia.	E	5/16"	(.328)	(.298)
Width Across Flat	F	1/2"	(.515)	(.485)
Width Across Corner	G	9/16"	(.578)	(.548)
Head Heigth	H	.210"	(.225)	(.195)

Material: A cap screw shall be made from one of the following austenitic alloys. 303, 303Se, 304, XM7, all of which are characterized as having a chromium content of 17-19% and nickel content of 8-10%.

ERIC J. TOMPOS LICENSE 63511 STATE OF FLORIDA PROFESSIONAL ENGINEER

SHEET SIZE= C	DRAWN BY: wjm	MATERIAL: 18-8 Stainless Steel	
SCALE =	DATE DRAWN: 8/6/2010		
WEIGHT:	STANDARD TOLERANCE: .00 ±.01, .000 ±.005, ANG. ±.5°, FRACTIONS: ± 1/16"	APPROVED BY:	PART NAME: 5/16" - 18 x 3/4"bolt
3446 US 6 EAST Bremen, IN 46506	FIRST USED:	DATE APPR'D:	PART NUMBER: 10898 Bolt 5_16 REV. B

LOC:/Z/Projects/Projects 2010/CCRR for Westbury Railing/QCM Ready prints

Florida Registration No. 63511
NTA, Inc. (COA8463)
P.O. Box 490
Nappanee, IN 46550

PART NUMBER:

REV.	REVISION	DATE
A	RELEASED TO PRODUCTION	

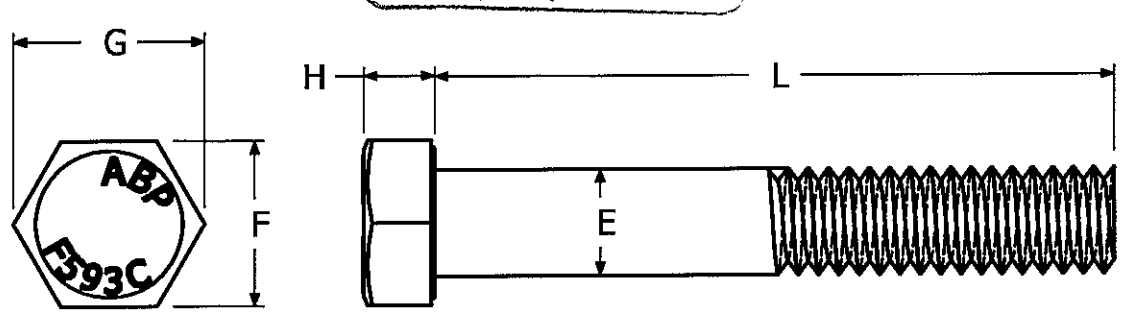

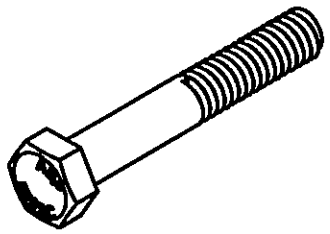

Dimensions		Nominal	Max	Min
Length	L	2"	(2.025)	(1.975)
Body Dia.	E	5/16"	(.328)	(.298)
Width Across Flat	F	1/2"	(.515)	(.485)
Width Across Corner	G	9/16"	(.578)	(.548)
Head Heigth	H	.210"	(.225)	(.195)

Material: A cap screw shall be made from one of the following austenitic alloys. 303, 303Se, 304, XM7, all of which are characterized as having a chromium content of 17-19% and nickel content of 8-10%.

ERIC J. TOMPOS
LICENSE
No 63511
STATE OF
FLORIDA
PROFESSIONAL ENGINEER

PRODUCT REVISED
as complying with the Florida
Building Code
Acceptance No 14-0515.01
Expiration Date 05/01/2019
By
Miami Dade Product Control

LOC: Z/Projects/Projects 2010/CCRR for Westbury Railing/QCM Ready Prints

WEIGHT:	SHEET SIZE= C	DRAWN BY: fsb	MATERIAL: 18-8 Stainless Steel
	SCALE =	DATE DRAWN: 8/6/2010	
	STANDARD TOLERANCE: .00 ±.01 .000 ±.005 ANG. ±.5° FRACTIONS: ± 1/16"	APPROVED BY:	PART NAME: 5/16 - 18 x 2 bolt
3446 US 6 EAST Bremen, IN 46506	FIRST USED:	DATE APPR'D:	PART NUMBER: 10896 Bolt 5_16 REV.

PART NUMBER: 70996

NOTE:
1. ENDS TO BE SQUARE.

Eric J. Tompos, PE
Florida Registration No. 63511
NTA, Inc. (COA#463)
P.O. Box 490
Nappanee, IN 46550

REV.	DESCRIPTION	DATE
A	Released to Production	07/11/2007
B	1 3/4 was 1.80	07/16/2008
C	Corrected alloy description on print.	02/10/2011
D	Changed lenght 1.69" was 1.78".	01/29/2012

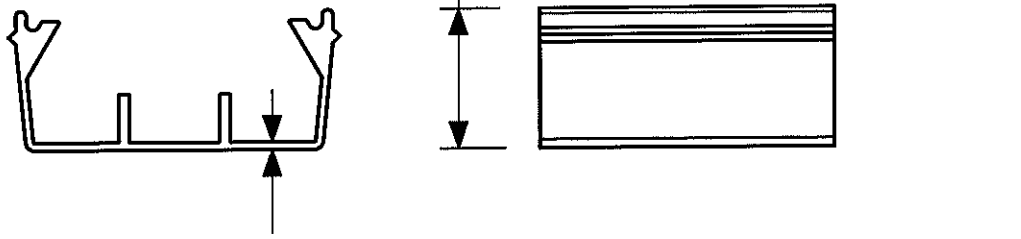

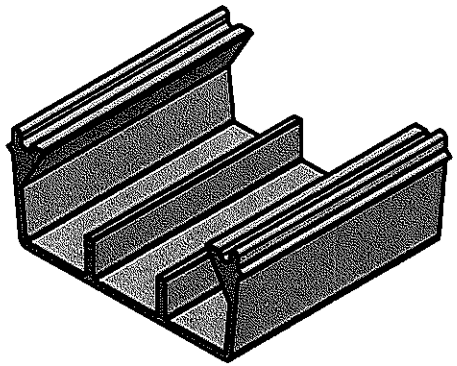

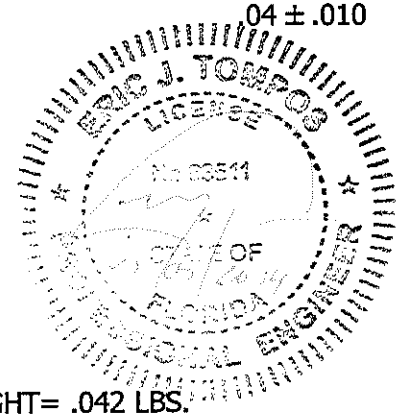

PRODUCT REVISED
as complying with the Florida
Building Code
Acceptance No 14-0515.01
Expiration Date 02/01/2019
By
Miami Dade Product Control

Z:\Quality Manuals\CCRR-0163, ----\2.1.7 Product Drawings&Changes\Westbury\Components\70996 Wedge QCM.idw

WEIGHT= .042 LBS.

SHEET SIZE= A	DRAWN BY: fsb	MATERIAL: 6063-T6 ALUMINUM	
SCALE = 1:1	DATE DRAWN: 7/26/2007		
FINISH:	STANDARD TOLERANCE: .00 ±.01 FRACTIONS: .000 ±.005 ANG. ±.5° ±1/16"	APPROVED BY: FSB	PART NAME: WEDGE
DSI Digger Specialties Inc. 3446 US 6 EAST Bremen, IN 46506	FIRST USED ON: AGR	DATE APPR'D: 7-11-07	PART NUMBER: 70996 REV. C

REV.	REVISION	DATE
A	RELEASED TO PRODUCTION	

PART NUMBER:

Eric J. Tompos, PE
Florida Registration No. 63511
MTA, Inc. (CDA0463)
P.O. Box 450
Nappanee, IN 46550

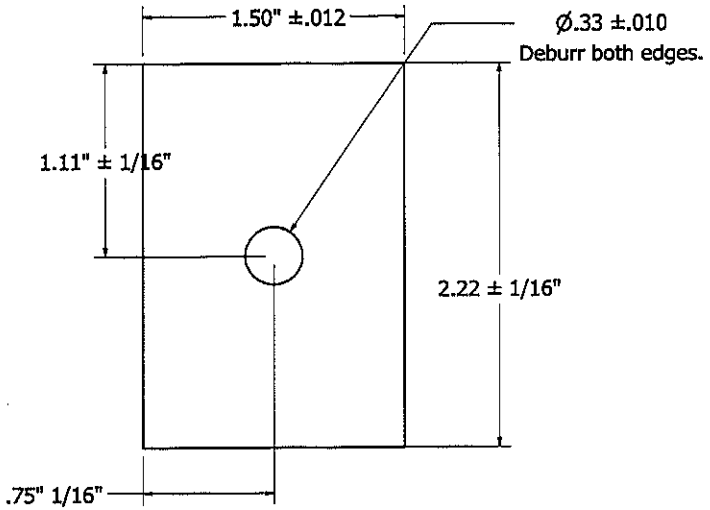

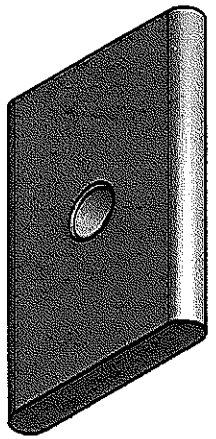

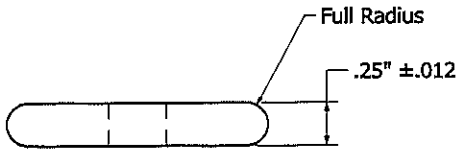

PRODUCT REVISED
as complying with the Florida
Building Code
Acceptance No 14-0515.01
Expiration Date 05/01/2019
By
Miami Dade Product Control

ERIC J. TOMPOS
LICENSE
No 63511
STATE OF
FLORIDA
PROFESSIONAL ENGINEER

Z:\Quality Manuals\CCRR-0163, —\2.1.7 Product Drawings&Changes\Westbury\Components\71400 CO Wedge Plate for PP.ldw

SHEET SIZE= C	DRAWN BY: fsb	MATERIAL: 6063 T6 Aluminum	
SCALE =	DATE DRAWN: 12/16/2010		
WEIGHT:	STANDARD TOLERANCE: .00 ±.01, .000 ±.005, ANG. ±.5°, FRACTIONS: ± 1/16"	APPROVED BY:	PART NAME: Wedge Plate for CO Power Post
DSI Digger Specialties Inc. 3446 US 6 EAST Bremen, IN 46506	FIRST USED:	DATE APP'D:	PART NUMBER: 71400 REV.

Original LOC:Z/Aluminum/Components/Alum Railing Section Mounts

REV.	Description of revision	DATE
B	Revised center hole	8-18-10

Eric J. Tompos, PE
Florida Registration No. [illegible]
NTA, Inc. (COA[illegible])
P.O. Box [illegible]
Nappanee, IN 46550

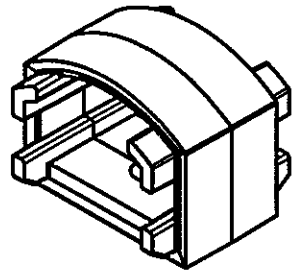

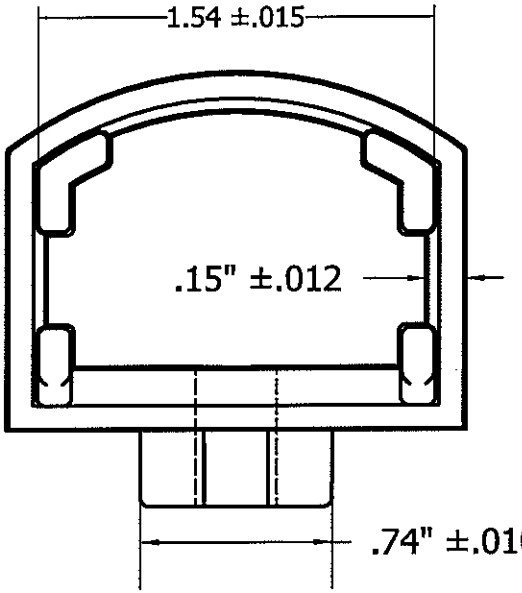

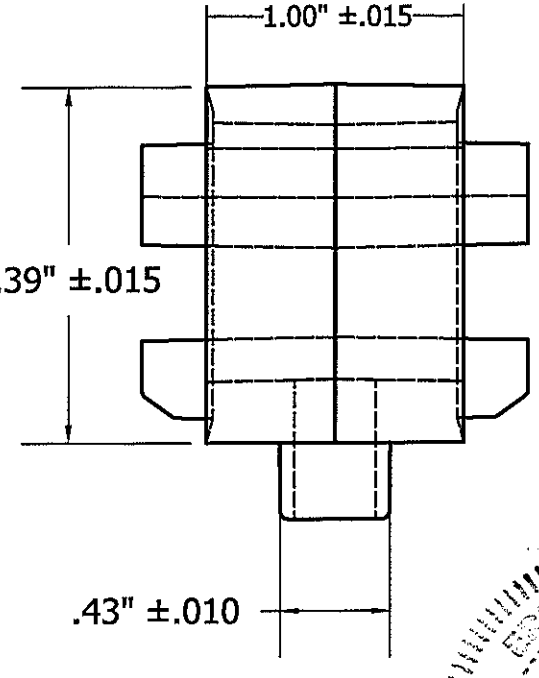

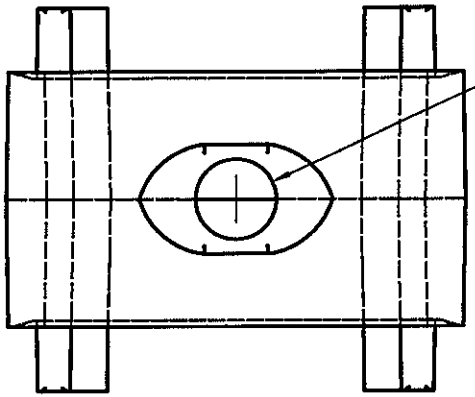

PRODUCT REVISED
as complying with the Florida
Building Code
Acceptance No 14-0515.01
Expiration Date 05/01/2019
By
Miami Dade Product Control

ERIC J. TOMPOS LICENSE No 55511 STATE OF FLORIDA PROFESSIONAL ENGINEER

This drawing LOC:Z/Projects/Projects 2010/
CCRR for Westbury Railing/QCM Ready Parts Prints

Original LOC:Z/Aluminum/Components/
Alum railing section mounts/
Zinc Westbury Mounts

FINISH:	SHEET SIZE SCALE =	DRAWN BY: fsb DATE DRAWN: 8/18/2010	MATERIAL: Zamak 3 (Zinc)
	STANDARD TOLERANCE: .00 ±.01 FRACTIONS: 1/16" .000 ±.005 ANG. ±.5°		PART NAME: PP Crossover Adapter, Top
3446 US 6 EAST Bremen, IN 46506	FIRST USED ON:		PART NUMBER: 55260 WB PP Crossover Connector REV. B

REV.	Description of revision	DATE
A	RELEASED TO PRODUCTION	
B	Revised center hole	8-18-10

Eric J. Tompos, PE
Florida Registration No. 63511
NTA, Inc. (COA#463)
P.O. Box 490
Nappanee, IN 46550

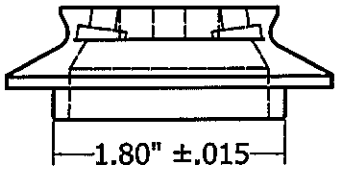

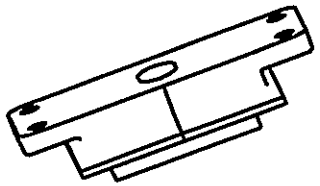

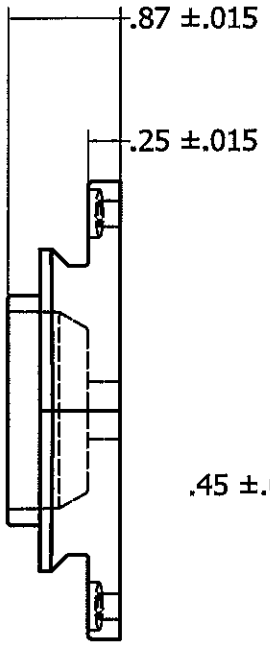

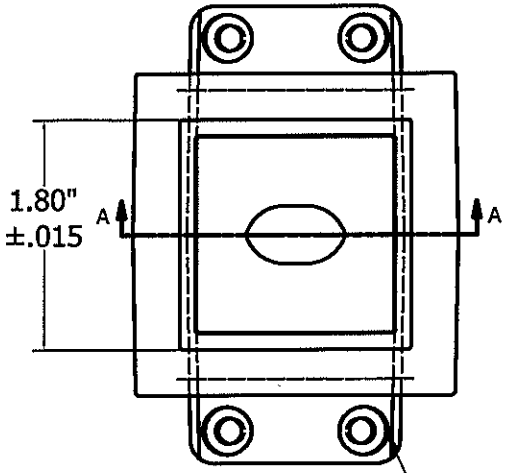

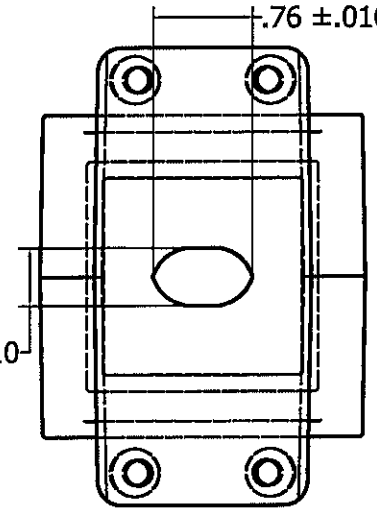

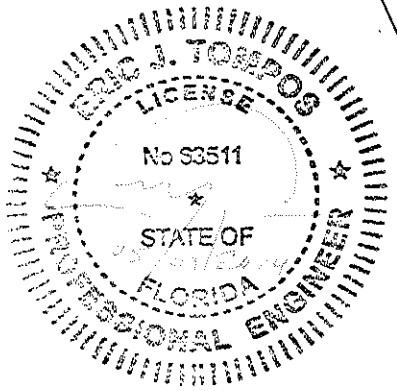

PRODUCT REVISED
as complying with the Florida
Building Code
Acceptance No 14-0515.01
Expiration Date 05/01/19
By
Miami Dade Product Control

This drawing LOC:Z/Projects/Projects 2010/
CCRR for Westbury Railing/QCM Ready Parts Prints

Original LOC:Z/Aluminum/Components/Alum railing section mounts/Zinc Westbury Mounts

FINISH:	SHEET SIZE= C	DRAWN BY: fsb	MATERIAL: Zemak 3 (Zinc)
	SCALE =	DATE DRAWN: 8/18/2010	
	STANDARD TOLERANCES: .00 ±.01, .000 ±.005, ANG. ±.5° FRACTIONS: 1/16"	APPROVED BY:	PART NAME: PP Crossover Adapter
3446 US 6 EAST Bremen, IN 46506	FIRST USED ON: Power Post	DATE APPR'D:	PART NUMBER: 55259 WB PP Crossover Adapter REV B

REV.	REVISION	DATE
A	RELEASED TO PRODUCTION	

PART NUMBER:

Eric J. Tompos, PE
Florida Registration No. 53511
NTA, Inc. (COA8463)
P.O. Box 490
Nappanee, IN 46550

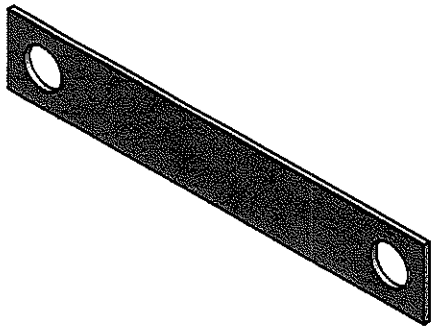

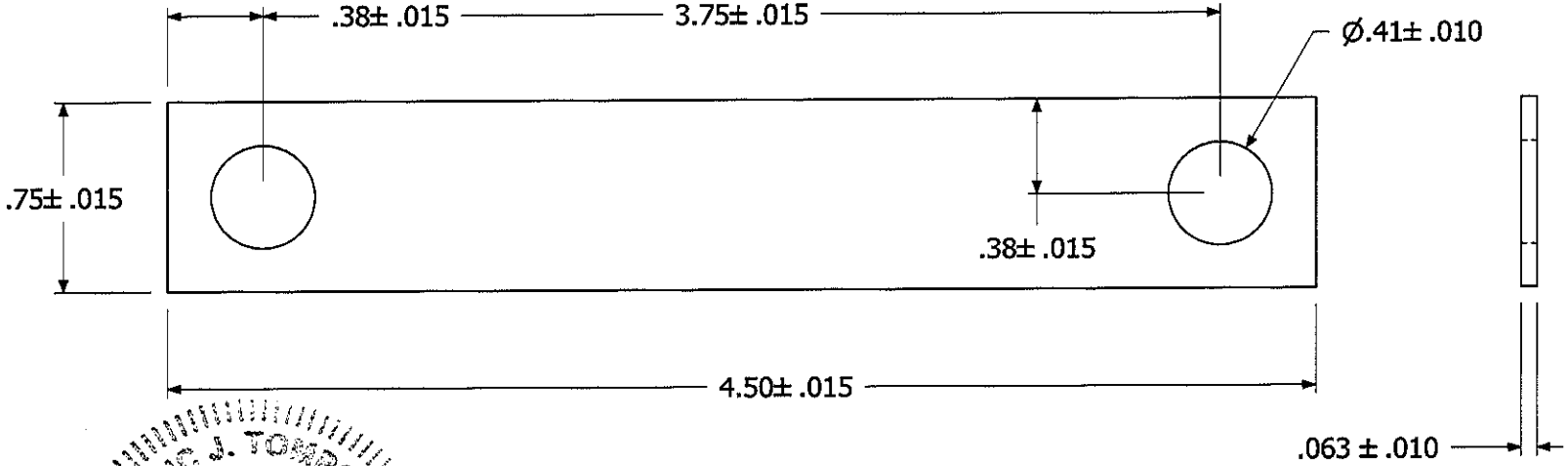

ERIC J. TOMPOS
License
No 53511
STATE OF
FLORIDA
PROFESSIONAL ENGINEER

PRODUCT REVISED
as complying with the Florida
Building Code
Acceptance No 14-0515.01
Expiration Date 05/01/2019
By
Miami Dade Product Control

SHEET SIZE= C	DRAWN BY: fsb	MATERIAL: 18-8 Stainless Steel	
SCALE =	DATE DRAWN:		
FINISH:	STANDARD TOLERANCE: .00 ±.01 FRACTIONS: .000 ±.005 ANG. ±.5° ±1/16"	6/8/2010	PART NAME: Shim Plate
DSI Digger Specialties, Inc. 3446 US 6 EAST Bremen, IN 46506	FIRST USED ON:	APPROVED BY:	
		DATE APPR'D:	PART NUMBER: 55240 Shim Plate REV.

Z:\Quality Manuals\CCRR-0163, —\2.1.7 Product Drawings&Changes\Westbury\Components\55240 Shim Plate.idw

PART NUMBER:

REV.	REVISION	DATE
A	RELEASED TO PRODUCTION	

2 1/2" Post Plate

Eric J. Tompos, PE
Florida Registration No. 63511
NTA, Inc. (COA8463)
P.O. Box 490
Nappanee, IN 46550

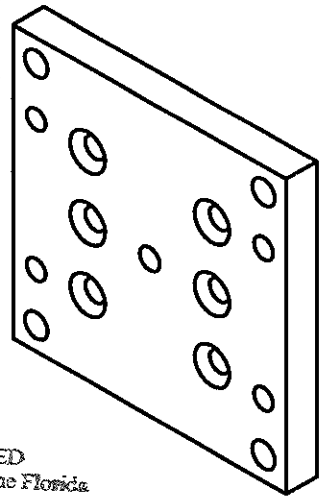

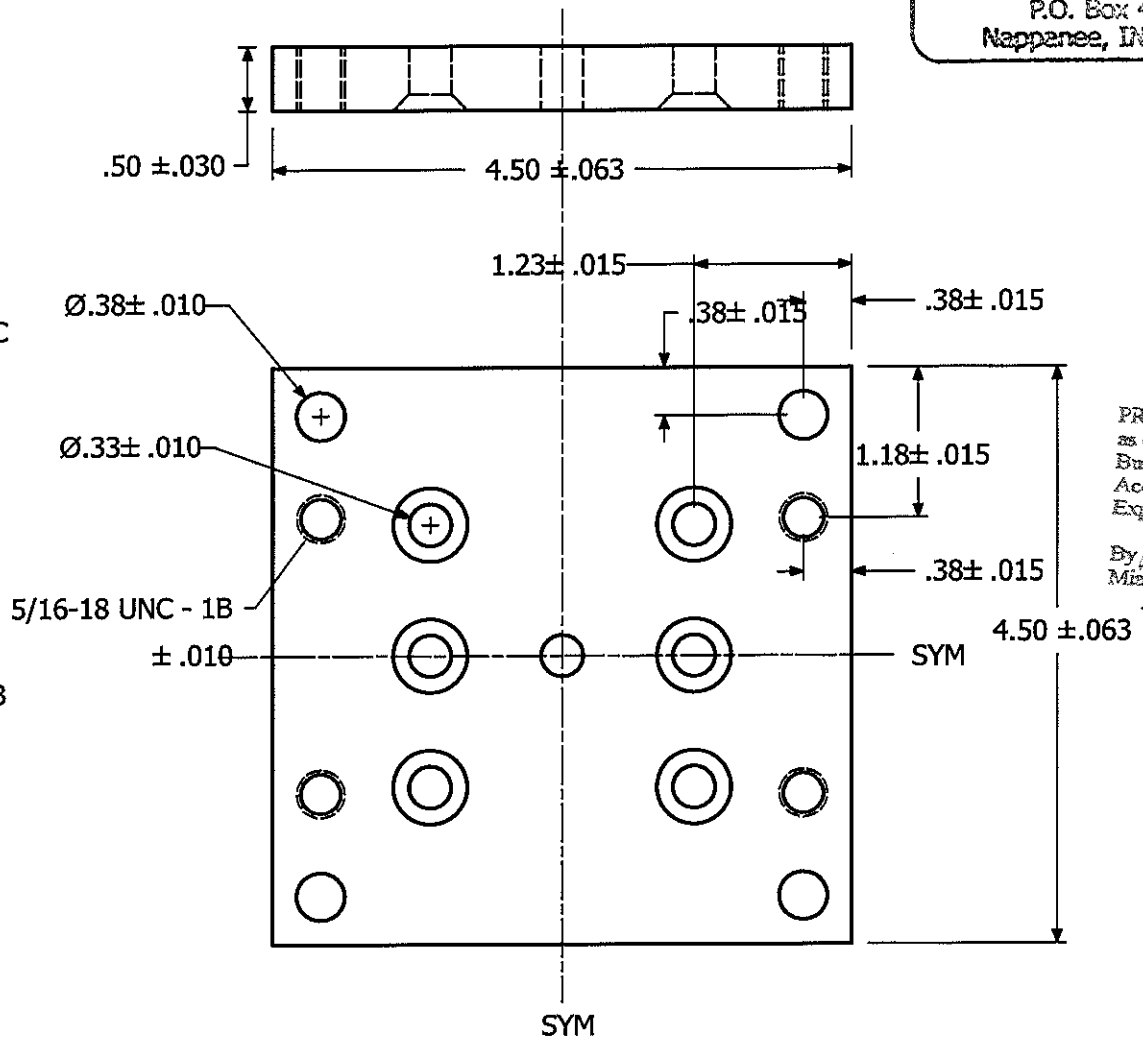

PRODUCT REVISED
as complying with the Florida
Building Code
Acceptance No 14-0515.01
Expiration Date 05/01/2019
By
Miami Dade Product Control

ERIC J. TOMPOS LICENSE No 63511 STATE OF FLORIDA PROFESSIONAL ENGINEER

SHEET SIZE= C	DRAWN BY: fsb	MATERIAL: Aluminum 6061-T6	
SCALE =	DATE DRAWN: 6/8/2010		
FINISH:	STANDARD TOLERANCE: .00 ±.01 FRACTIONS ±1/16 .000 ±.005 ANG. ±.5°	APPROVED BY:	PART NAME: 2 1/2" Post Plate
3446 US 6 EAST Bremen, IN 46506	FIRST USED ON:	DATE APPR'D:	PART NUMBER: 55239 Power Post Base REV.

LOC: Z/Projects/Projects 2010/CCRR for Westbury Railing/QCM Ready Prints

REV.	REVISION	DATE
A	RELEASED TO PRODUCTION	
B	Changed tightness of cap by .005 per side (2.480 was 1.490)	05-18-2010

PART NUMBER:

Eric J. Tompos, PE
Florida Registration No. 63[illegible]
NTA, Inc. (COA[illegible])
P.O. Box 490
Nappanee, IN 46550

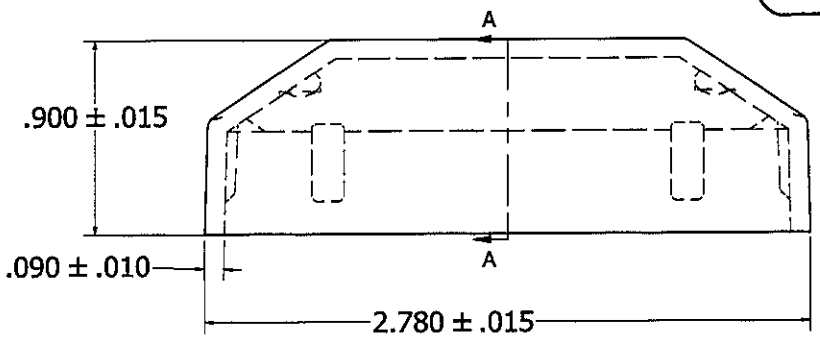

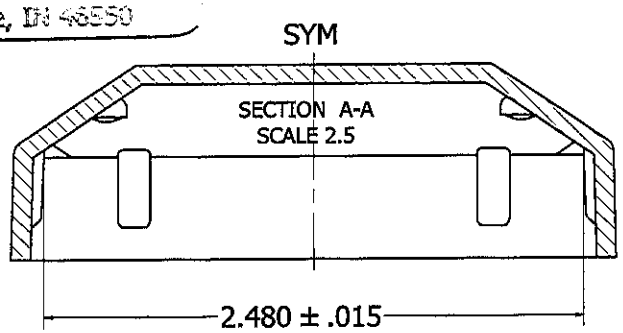

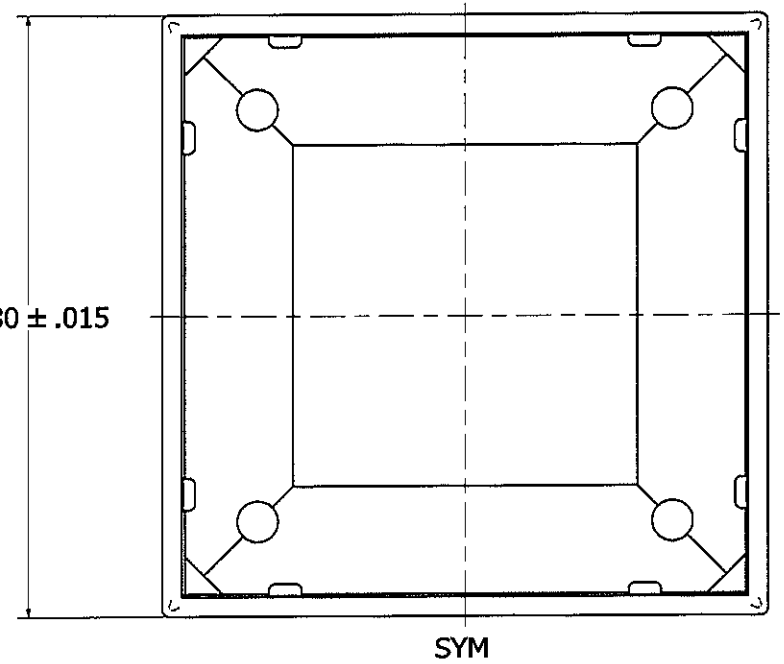

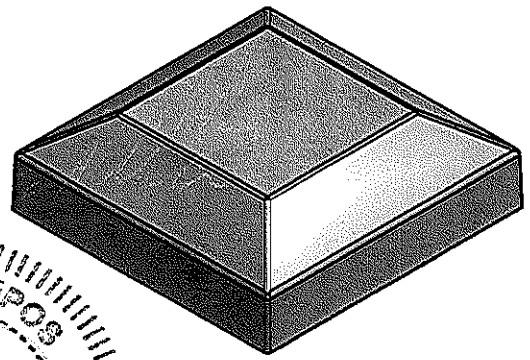

ERIC J. TOMPOS LICENSEE No 63511 STATE OF FLORIDA PROFESSIONAL ENGINEER

PRODUCT REVISED
as complying with the Florida
Building Code
Acceptance No 14-0515.01
Expiration Date 05/01/2019
By
Miami Dade Product Control

SHEET SIZE= C	DRAWN BY: wjm	MATERIAL: Zamak 3 (Zinc)	
SCALE =	DATE DRAWN: 5/14/2010		
FINISH:	STANDARD TOLERANCE: .00 ±.01 FRACTIONS: .000 ±.005 ANG. ±.5° ±1/16"	APPROVED BY:	PART NAME: 2 1/2" Flat Post Cap
DSI 3446 US 6 EAST Bremen, IN 46506	FIRST USED ON:	DATE APPR'D:	PART NUMBER: 55005 Cap 2.5 Flat REV. B

Z:\Quality Manuals\CCRR-0163, ----\2.1.7 Product Drawings&Changes\Westbury\Components\55005 Cap 2.5 Flat QCM.idw

REV.	DESCRIPTION	DATE

Eric J. Tompos, PE
Florida Registration No. 63511
NTA, Inc. (COA#453)
P.O. Box 450
Nappanee, IN 46550

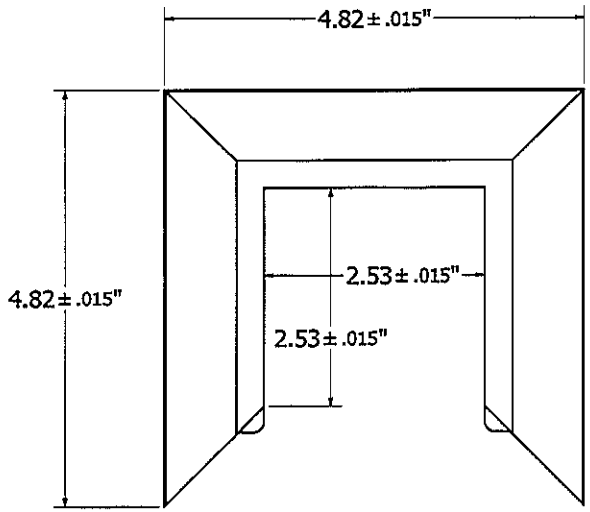

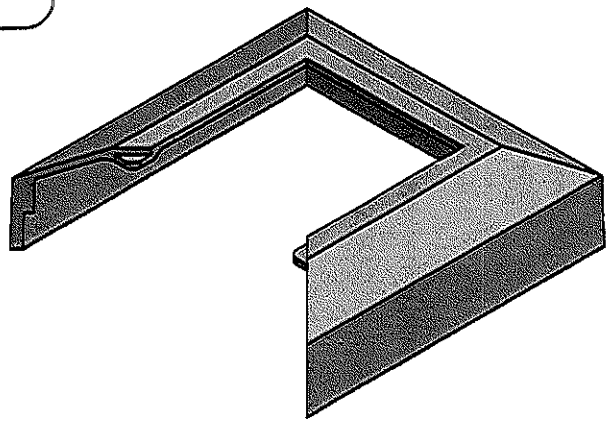

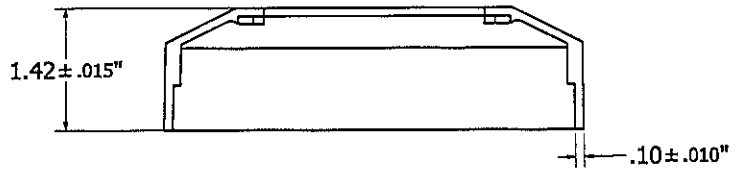

PRODUCT REVISED
as complying with the Florida
Building Code
Acceptance No 14-0515.01
Expiration Date 05/01/2019
By
Miami Dade Product Control

ERIC J. TOMPOS
LICENSE
No 63511
STATE OF
FLORIDA
PROFESSIONAL ENGINEER

DSI Digger Specialties Inc. 3446 US 6 EAST BREMEN, IN 46506 www.diggerspecialties.com	WEIGHT:	DRAWN BY: WJM	MATERIAL: Zamak3 (Zinc)
	STANDARD TOLERANCE: .00 ±.01 .000 ±.005 ANG. ±.5~ FRACTIONS: ± 1/16"	DATE DRAWN: 11/1/2013	PART NAME: 55251 Flair Post SQ 2.5 A QCM.ldw
		DRAFT NO. 20131101-1W	
	FILE LOC: Z:\Quality Manuals\CCRR-0163, —\2.1.7 Product Drawings&Changes\Westbury\Components\55251 Flair Post SQ 2.5 A QCM.ldw	PART NUMBER: 55251	REV.

REV.	DESCRIPTION	DATE
A	Corrected part number.	11/18/2013

Eric J. Tompos, PE
Florida Registration No. 53511
NTA, Inc. (COA#463)
P.O. Box 490
Nappanee, IN 46550

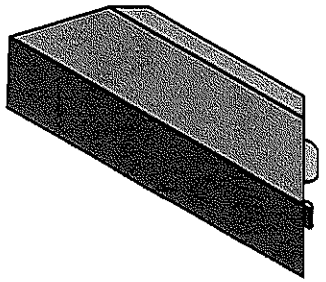

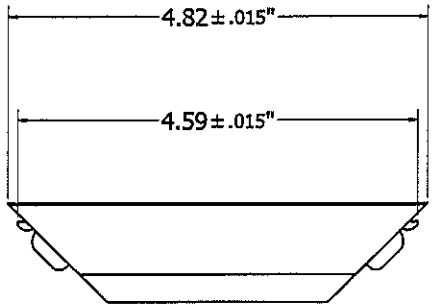

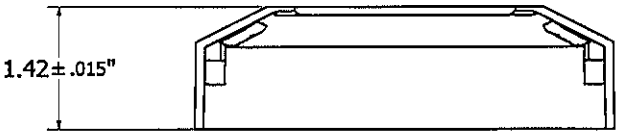

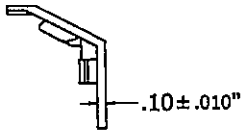

ERIC J. TOMPOS
LICENSE
No 53511
STATE OF
FLORIDA
PROFESSIONAL ENGINEER

PRODUCT REVISED
as complying with the Florida
Building Code
Acceptance No 14-0515.01
Expiration Date 05/01/2019
By
Miami Dade Product Control

Digger Specialties Inc.
3446 US 6 EAST
BREMEN, IN 46506
www.diggerspecialties.com

WEIGHT:	DRAWN BY: WJM	MATERIAL: Zamak3 (Zinc)	
STANDARD TOLERANCE: .00 ±.01, .000 ±.005, ANG. ±.5°, FRACTIONS: ± 1/16"	DATE DRAWN: 11/1/2013	PART NAME: 55252 Flair Post SQ 2.5 B QCM.ldw	
FILE LOC: Z:\Quality Manuals\CCRR-0163, —\2.1.7 Product Drawings&Changes\Westbury\Components\55252 Flair Post SQ 2.5 B QCM.ldw	DRAFT NO. 20131101-2W	PART NUMBER: 55252	REV. A