MIAMI-DADE COUNTY
PRODUCT CONTROL SECTION
11805 SW 26 Street, Room 208
Miami, Florida 33175-2474
T (786) 315-2590 F (786) 315-2599
www.miamidade.gov/economy

DEPARTMENT OF REGULATORY AND ECONOMIC RESOURCES (RER)
BOARD AND CODE ADMINISTRATION DIVISION

# NOTICE OF ACCEPTANCE (NOA)

**GlassWall, LLC**
**3550 N. W. 49 Street**
**Miami, FL 33142**

**SCOPE:**

This NOA is being issued under the applicable rules and regulations governing the use of construction materials. The documentation submitted has been reviewed and accepted by Miami-Dade County RER -Product Control Section to be used in Miami Dade County and other areas where allowed by the Authority Having Jurisdiction (AHJ).

This NOA shall not be valid after the expiration date stated below. The Miami-Dade County Product Control Section (In Miami Dade County) and/or the AHJ (in areas other than Miami Dade County) reserve the right to have this product or material tested for quality assurance purposes. If this product or material fails to perform in the accepted manner, the manufacturer will incur the expense of such testing and the AHJ may immediately revoke, modify, or suspend the use of such product or material within their jurisdiction. RER reserves the right to revoke this acceptance, if it is determined by Miami-Dade County Product Control Section that this product or material fails to meet the requirements of the applicable building code.

This product is approved as described herein, and has been designed to comply with the Florida Building Code, including the High Velocity Hurricane Zone.

**DESCRIPTION: Series "200S" Aluminum Sliding Glass Door (Insulated wet glazed)-S.M.I.**

**APPROVAL DOCUMENT:** Drawing No. **W13-02 Rev C**, titled "Series 200S Alum Sliding Glass Door (S.M.I.)", sheets 1 through 11 of 11 (inclusive sheets 2.1, 4.1 & 4.2), prepared by Al-Farooq Corporation, dated 01/03/13 and last revised on JUN 20, 2013, signed and sealed by Javad Ahmad, P.E., bearing the Miami-Dade County Product Control Renewal stamp with the Notice of Acceptance number and expiration date by the Miami-Dade County Product Control Section.

**MISSILE IMPACT RATING: Small Missile Impact Resistant**

**Limitations:**

1. See Design Pressure (DP) Vs. Glass & Heavy Duty (HD) interlock/astragal types in sheet 4. See Head anchor capacity chart in sheet 4.1 and sill anchor capacity chart in sheet 4.2. Lower DP capacities from these charts shall apply to the entire System.
2. See Sheet 7 for typical fixed panels arrangement. Alum clip at frame head for load above 110 PSF is required.
3. Standalone units with **free** (unanchored) jambs: See Max size, installation & DP in sheets **2.1** & details in sheet 8.

**LABELING:** Each unit shall bear a permanent label with the manufacturer's name or logo, city, state and series and following statement: "Miami-Dade County Product Control Approved", noted herein.

**RENEWAL** of this NOA shall be considered after a renewal application has been filed and there has been no change in the applicable building code negatively affecting the performance of this product.

**TERMINATION** of this NOA will occur after the expiration date or if there has been a revision or change in the materials, use, and/or manufacture of the product or process. Misuse of this NOA as an endorsement of any product, for sales, advertising or any other purposes shall automatically terminate this NOA. Failure to comply with any section of this NOA shall be cause for termination and removal of NOA.

**ADVERTISEMENT:** The NOA number preceded by the words Miami-Dade County, Florida, and followed by the expiration date may be displayed in advertising literature. If any portion of the NOA is displayed, then it shall be done in its entirety.

**INSPECTION:** A copy of this entire NOA shall be provided to the user by the manufacturer or its distributors and shall be available for inspection at the job site at the request of the Building Official.

This NOA **renews NOA # 12-0821.17** and consists of this page 1 and evidence pages E-1 & E-2, as well as approval document mentioned above.

The submitted documentation was reviewed by **Ishaq I. Chanda, P.E.**

MIAMI-DADE COUNTY APPROVED

9/11/14

## NOTICE OF ACCEPTANCE: EVIDENCE SUBMITTED

**A. DRAWINGS**

1. Manufacturer's die drawings and sections (Submitted under files referenced below )
2. Drawing No. **W13-02 Rev C**, titled "Series 200S Alum Sliding Glass Door (S.M.I.)", sheets 1 through 11 of 11 (inclusive sheets 2.1, 4.1 & 4.2), prepared by Al-Farooq Corporation, dated 01/03/13 and last revised on JUN 20, 2013, signed and sealed by Javad Ahmad, P.E.

**B. TESTS**

1. Test reports on: 1) Small Missile Impact Test per FBC, TAS 201-94
   2) Large Missile Impact Test per FBC, TAS 201-94
   3) Cyclic Wind Pressure Loading per FBC, TAS 203-94

along with marked-up drawings and installation diagram of an insulated laminated aluminum sliding glass door OXXO (sample A-1-SMI and B-1-LMI), prepared by Fenestration Testing Lab., Test Report No. **FTL-6947**, dated 08/03/12 and last revised & reissued on 08/03/13, signed and sealed by Marlin D. Brinson, P. E. (submitted under file **#12-0821.17**)

Additional Referenced test report # **FTL-6355** dated 11/16/10 per TAS 201, 202 & 203-94 for OXXXXO insulated laminated glass, issued by Fenestration Testing Lab., signed and sealed by Jorge A. Causo, P. E.

2. Test reports on: 1) Air Infiltration Test, per FBC, TAS 202–94
   2) Uniform Static Air Pressure Test, Loading per FBC TAS 202–94
   3) Water Resistance Test, per FBC, TAS 202–94
   4) Small Missile Impact Test per FBC, TAS 201–94
   5) Cyclic Wind Pressure Loading per FBC, TAS 203–94
   6) Forced Entry Test, per FBC 2411 3.2.1 (b) and TAS 202–94

along with marked-up drawings and installation diagram of an OXXO aluminum sliding glass door (free jamb-unanchored), prepared by Fenestration Testing, Lab., Test Report No. **FTL-7009**, dated 08/08/12, signed and sealed by Marlin D. Brinson, P. E.

Additional O-X free jamb SGD referenced test report # **09-009A** dated APR 27, 2009 per TAS 201, 202 & 203-94, issued by Construction Testing Corp.

3. Test reports on: 1) Air Infiltration Test, per FBC, TAS 202–94
   2) Uniform Static Air Pressure Test, Loading per FBC TAS 202–94
   3) Water Resistance Test, per FBC, TAS 202–94
   4) Small Missile Impact Test per FBC, TAS 201–94
   5) Cyclic Wind Pressure Loading per FBC, TAS 203–94
   6) Forced Entry Test, per FBC 2411 3.2.1 (b) and TAS 202–94

along with marked-up drawings and installation diagram of an aluminum sliding glass door, prepared by Fenestration Testing Laboratory, Inc., Test Report No. **FTL-4266**, dated 08/15/04 and **FTL-4000** dated 11/26/03, both signed and sealed by Edmundo Largaespada, P.E. (Submitted under files **# 04-0316.03** , **# 04-0702.01, # 070309.10 & 09-0604.22)**

**C. CALCULATIONS** (submitted under file **#12-0821.17**)

1. Anchor verification calculations and structural analysis, complying with FBC-2010, prepared by Al Farooq Corporation, dated 03/25/13 and last revised on 04/08/13, signed and sealed by Javad Ahmad, P.E.
2. Glazing complies w/ ASTME-1300-02 & -04

Ishaq I. Chanda

**Ishaq I. Chanda, P.E.**
**Product Control Examiner**
**NOA No. 14-0515.04**
**Expiration Date: May 29, 2015**
**Approval Date: August 21, 2014**

## NOTICE OF ACCEPTANCE: EVIDENCE SUBMITTED

### D. QUALITY ASSURANCE

1. Miami Dade Department of Regulatory and Economic Resources (RER).

### E. MATERIAL CERTIFICATIONS

1. Notice of Acceptance No. **11-0624.02** issued to E.I. DuPont DeNemours & CO., Inc. for "**DuPont Sentry Glass**", expiring on January 14, 2017.
2. Notice of Acceptance No. **12-1231.08** issued Eastman Chemical Company (MA) former Solutia Inc. for "**Saflex CP ™ - Saflex and Saflex HP Composite Glass Interlayer w/ PET Core**", expiring on December 11, 2018.

### F. STATEMENTS

1. Statement letter of conformance to FBC 2010 and letter of no financial interest, prepared by Al Farooq Corporation, dated MAY 09, 2014, signed and sealed by Javad Ahmad, P.E
2. Statement letter of conformance to FBC 2010 and letter of no financial interest, prepared by Al Farooq Corporation, dated 06/20/13, signed and sealed by Javad Ahmad, P.E.(submitted under file **#12-0821.17**)
3. Lab compliance as part of the above referenced test reports.
4. Statement letter dated JAN 07, 2013, issued by Glasswall for extrusion verification used in the insulated laminated SGD in test report # FTL 6947 & 6355, signed by Federico Balestrazzi, President, Glasswall, LLC.(Submitted as part of file # 12-0821.18-LMI).
5. Statement letter dated May 09, 2014, issued by Fenestration Testing Lab of scheduled testing, signed by Iliana Sanchez.

### G. OTHER

1. This NOA **renews** NOA # **12-0821.17**, expired on May 29, 2014.
2. Conditional one year renewal, subjected to successful completion of verification test.
3. Verification test per RER e-mail dated April 10, 2013 to Glasswall.
4. Test proposals **#11-0972** and test proposal dated 02/25/09 approved by BCCO.
5. Previous associate file are # NOA(s) **# 04-0316.03, 04-0702.01, #07039.10 & #09-0604.22.**

Ishaq I. Chanda

**Ishaq I. Chanda, P.E.**
**Product Control Examiner**
**NOA No. 14-0515.04**
**Expiration Date: May 29, 2015**
**Approval Date: August 21, 2014**

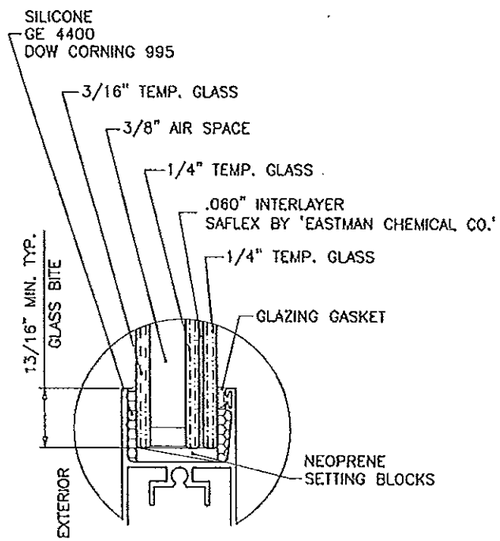


GLASS TYPE 'E'
1-1/8" OVERALL INSUL. LAM. GLASS

THESE DOORS ARE RATED FOR SMALL MISSILE IMPACT.
MIAMI-DADE COUNTY APPROVED IMPACT RESISTANT SHUTTERS
REQUIRED FOR INSTALLATIONS UP TO 30 FT. OF GRADE.
SHUTTERS NOT REQD. FOR INSTALLATIONS ABOVE 30 FT. OF GRADE.

## SERIES 200S – WET GLAZE
## ALUMINUM SLIDING GLASS DOOR

SEE CHART ON SHEET 4 FOR DESIGN LOAD CAPACITY OF DESIRED GLASS SIZE.
USING CHARTS ON SHEET 4.1(HEAD ANCHORS) & 4.2(SILL ANCHORS) SELECT ANCHOR OPTION WITH DESIGN RATING GREATER THAT DESIGN LOADS REQUIRED LOWER DESIGN PRESSURES FROM GLASS OR ANCHOR CHARTS WILL APPLY TO ENTIRE SYSTEM.

---

THIS PRODUCT HAS BEEN DESIGNED AND TESTED TO COMPLY WITH THE REQUIREMENTS OF THE FLORIDA BUILDING CODE INCLUDING HIGH VELOCITY HURRICANE ZONE (HVHZ).

1BY OR 2BY WOOD BUCKS BY OTHERS, MUST BE ANCHORED PROPERLY TO TRANSFER LOADS TO THE STRUCTURE.

ANCHORS SHALL BE AS LISTED, SPACED AS SHOWN ON DETAILS, ANCHORS EMBEDMENT TO BASE MATERIAL SHALL BE BEYOND WALL DRESSING OR STUCCO.

ANCHORING OR LOADING CONDITIONS NOT SHOWN IN THESE DETAILS ARE NOT PART OF THIS APPROVAL.

A LOAD DURATION INCREASE IS USED IN DESIGN OF ANCHORS INTO WOOD ONLY.

MATERIALS INCLUDING BUT NOT LIMITED TO STEEL/METAL SCREWS, THAT COME INTO CONTACT WITH OTHER DISSIMILAR MATERIALS SHALL MEET THE REQUIREMENTS OF THE FLORIDA BLDG. CODE SECTION 2003.8.4.

PRODUCT RENEWED
as complying with the Florida
Building Code
Acceptance No. 14-0515.04
Expiration Date MAY 29, 2015
By
Miami Dade Product Control

PRODUCT REVISED
as complying with the Florida
Building Code
Acceptance No 12-0821.17
Expiration Date MAY 29, 2014
By
Miami Dade Product Control

WET GLAZE
INSUL. LAM. GLASS
SMALL MISSILE IMPACT

Engr: JAVAD AHMAD
CIVIL
FLA. PE # 70592
C.A.N. 3538

JUN 2 0 2013

AL-FAROOQ CORPORATION
ENGINEERS & PRODUCT DEVELOPMENT
1235 S.W. 87 AVE
MIAMI, FLORIDA 33174
TEL. (305) 264-8100 FAX. (305) 262-6978
COMP-ANL\W13-02GWL

SERIES 200S ALUM SLIDING GLASS DOOR (S.M.I.)

GLASSWALL, LLC
3550 N.W. 49 STREET
MIAMI, FL. 33142
TEL. (305) 638-5151 FAX. (305) 638-5158

revisions:

| no | date | by | description |
|---|---|---|---|
| A | 03.25.13 | | TOP & BOTTOM RAIL REV. |
| B | 04.19.13 | | LAMI GLASS DETAILS REMOVED |
| C | 06.19.13 | | REV PER RER COMMENTS |

date: 01-03-13
scale: 1/2" = 1"
dr. by: HAMID
chk. by:

drawing no.
W13-02

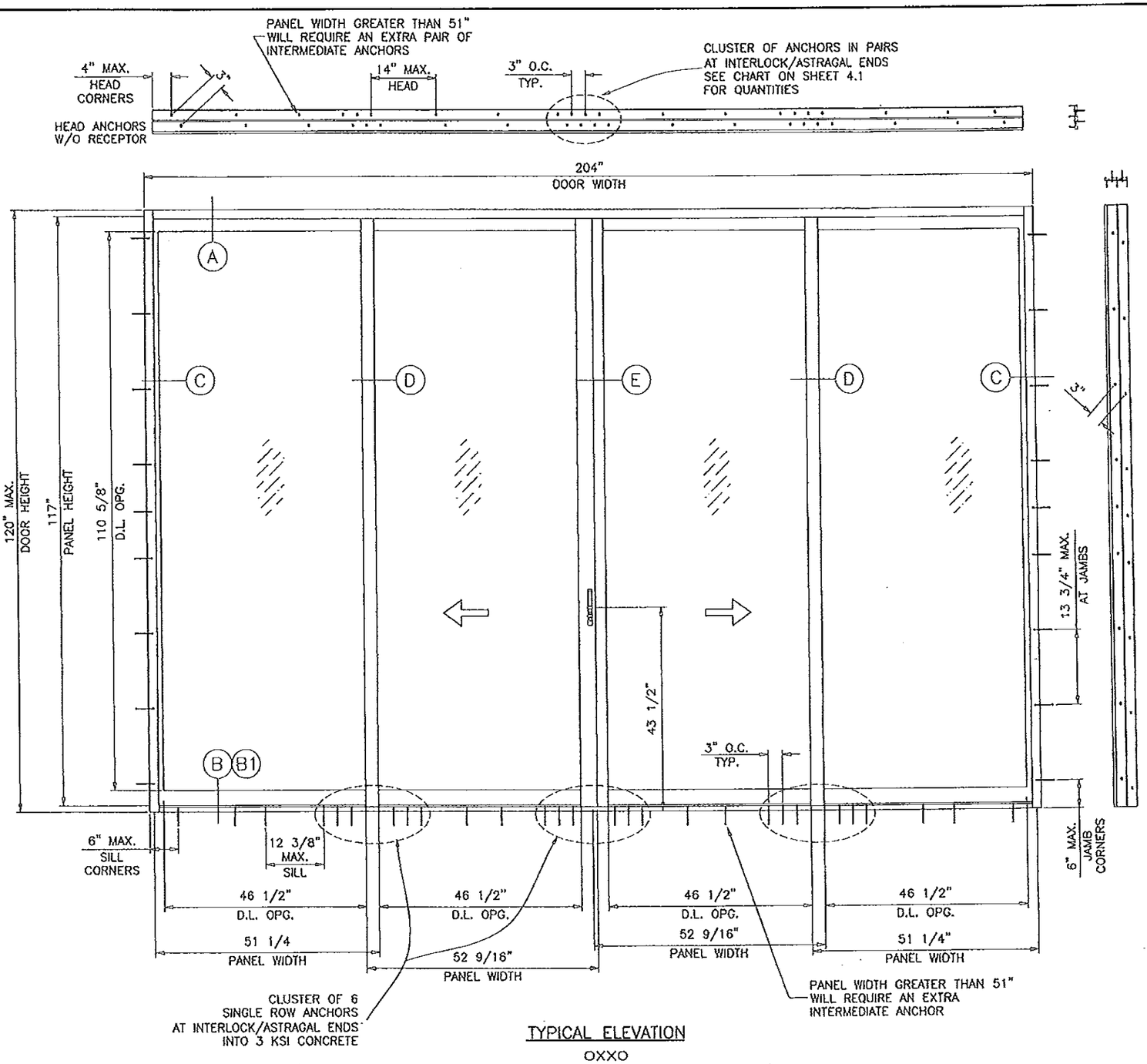


TYPICAL ELEVATION

OXXO

SEE CHART ON SHEET 4 FOR GLASS CAPACITY, AND CHARTS ON SHEET 4.1 FOR HEAD AND SHEET 4.2 FOR SILL ANCHOR CAPACITIES LOWER VALUE FROM CHARTS WILL CONTROL.

PRODUCT REVISED
as complying with the Florida
Building Code
Acceptance No. 14-0515.04
Expiration Date 5/29/15
By
Miami Dade Product Control

PRODUCT REVISED
as complying with the Florida
Building Code
Acceptance No. 12-0821.17
Expiration Date 5/29/14
By
Miami Dade Product Control

DAYLITE OPENINGS WIDTHS:
FIXED STILE–INTERLOCK = PANEL WIDTH – 4.750"
INTERLOCK–LOCK STILE = PANEL WIDTH – 6.250"
INTERLOCK–FEMALE ASTRAGAL = PANEL WIDTH – 6.125
INTERLOCK–MALE ASTRAGAL = PANEL WIDTH – 6"
FIXED STILE–MALE ASTRAGAL = PANEL WIDTH – 5.250"

DAYLITE OPENING HEIGHT:
PANEL HEIGHT – 6.375"

PANEL HEIGHT = DOOR HEIGHT – 3"

Engr: JAVAD AHMAD
CIVIL
FLA. PE # 70592
C.A.N. 3538

JUN 20 2013


AL-FAROOQ CORPORATION
ENGINEERS & PRODUCT DEVELOPMENT
1235 S.W. 87 AVE
MIAMI, FLORIDA 33174
TEL. (305) 264-8100 FAX. (305) 262-6978
COMP-ANL\W05-32GWL


SERIES 200S ALUM SLIDING GLASS DOOR (S.M.I.)

GLASSWALL, LLC
3550 N.W. 49 STREET
MIAMI, FL. 33142
TEL (305) 638-5151 FAX. (305) 638-5158

revisions:

| no | date | by | description |
|---|---|---|---|
| A | 03.25.13 | | NO CHANGE THIS SHEET |
| B | 04.19.13 | | LAMI GLASS DETAILS REMOVED |
| C | 06.19.13 | | NO CHANGE THIS SHEET |

date: 01-03-13
scale: 1/2"=1'-0"
dr. by: TARIQ
chk. by:

drowing no.
W13-02

sheet 2 of 11

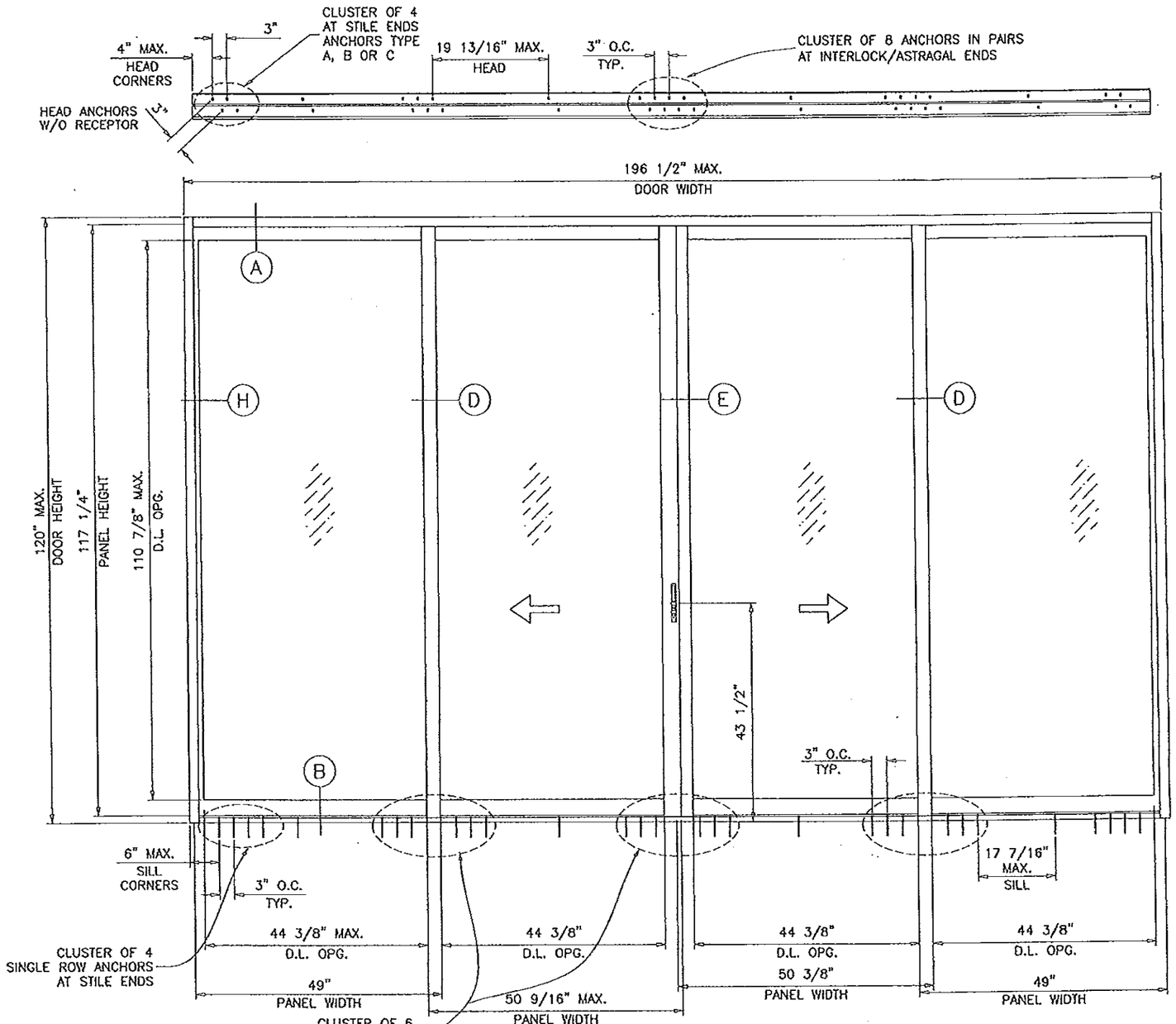


TYPICAL ELEVATION

OXXO

MAX. SIZE SHOWN (ALL SMALLER SIZES PERMITTED PER FBC)
USES THE SAME ANCHORS PATTERN AS SHOWN IN THIS ELEVATION
1/2" MAX. SHIM SPACE AT HEAD

FOR OPERABLE JAMBS LIMIT LOADS TO ±72.1 PSF

PRODUCT REVIEWED
as complying with the Florida
Building Code
Acceptance No. 14-0515.04
Expiration Date 5/20/15
By Ishaq I. Chaudhry
Miami-Dade Product Control

PRODUCT REVISED
as complying with the Florida
Building Code
Acceptance No. 12-0821.17
Expiration Date 5/24/14
By Ishaq I. Chaudhry
Miami-Dade Product Control

DAYLITE OPENINGS WIDTHS:
FIXED STILE–INTERLOCK = PANEL WIDTH – 4.750"
INTERLOCK–LOCK STILE = PANEL WIDTH – 6.250"
INTERLOCK–FEMALE ASTRAGAL = PANEL WIDTH – 6.125
INTERLOCK–MALE ASTRAGAL = PANEL WIDTH – 6"
FIXED STILE–MALE ASTRAGAL = PANEL WIDTH – 5.250"

DAYLITE OPENING HEIGHT:
PANEL HEIGHT – 6.375"

PANEL HEIGHT = DOOR HEIGHT – 3"

LIMIT MAX. LOADS FOR FOR DOORS WITH
FREE STANDING (UNANCHORED) JAMBS AS FOLLOWS.
(OXO) AND (OXXO) CONFIGURATIONS = ±75.0 PSF
ALL OTHER CONFIGURATIONS = ±72.1 PSF
(SEE SHEET 8)

Engr: JAVAD AHMAD
CIVIL
FLA. PE # 70592
C.A.N. 3538

JUN 20 2013


AL-FAROOQ CORPORATION
ENGINEERS & PRODUCT DEVELOPMENT
1235 S.W. 87 AVE
MIAMI, FLORIDA 33174
TEL. (305) 264-8100 FAX. (305) 262-6978
COMP-ANL\W05-32GWL


SERIES 200S ALUM SLIDING GLASS DOOR (S.M.L.)

GLASSWALL, LLC
3550 N.W. 49 STREET
MIAMI, FL. 33142
TEL. (305) 638-5151 FAX. (305) 638-5158

| revisions: | | | |
|---|---|---|---|
| no | date | by | description |
| A | 03.25.13 | | NO CHANGE THIS SHEET |
| B | 04.19.13 | | LAMI GLASS DETAILS REMOVED |
| C | 06.19.13 | | REV PER RER COMMENTS |

date: 01-03-13
scale: 1/2"=1'-0"
dr. by: TARIQ
chk. by:

drawing no.
W13-02

sheet 2.1 of 11

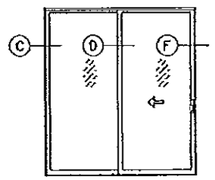


OX (SHOWN)
XO

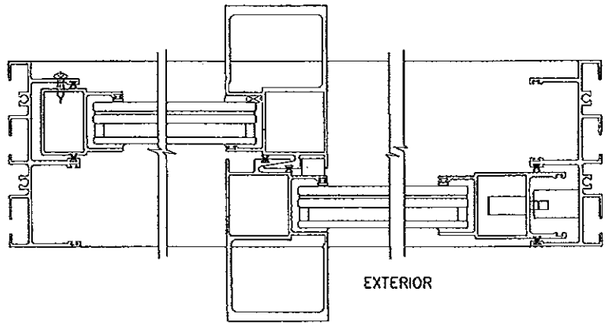


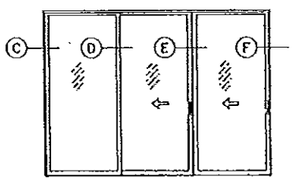


OXX (SHOWN)
XXO

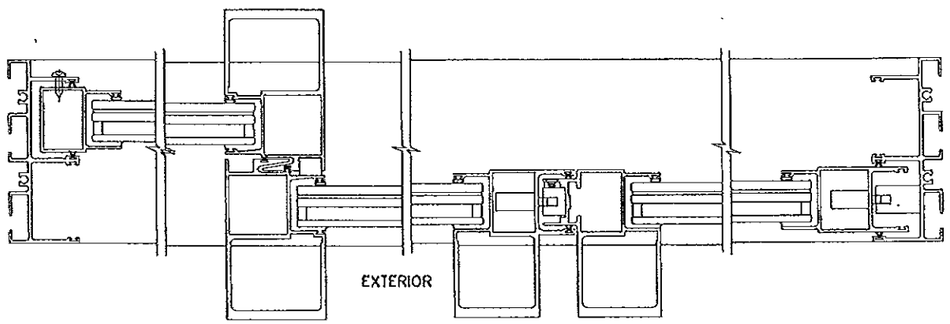


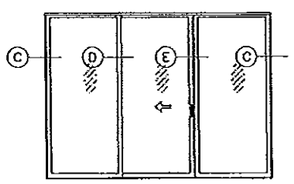


OXO

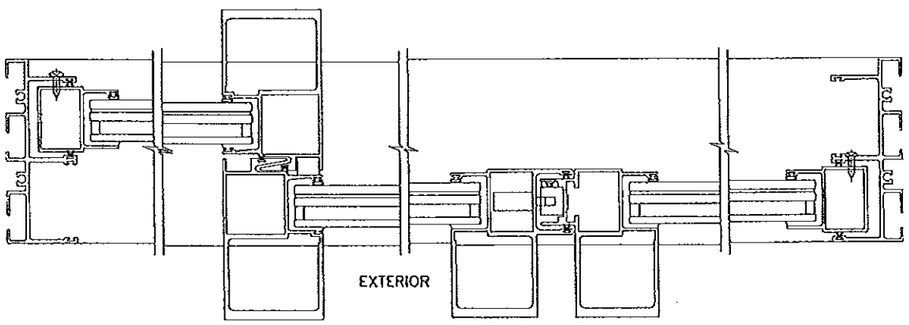


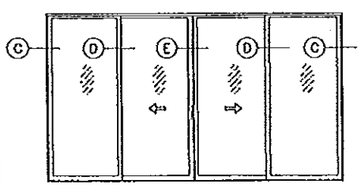


OXXO

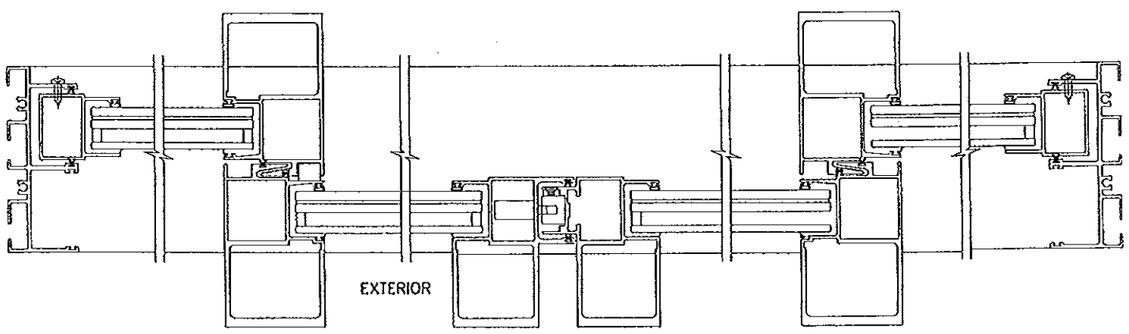


APPROVED CONFIGURATIONS
WITH GLASS TYPE 'E'

NOTE:
CONFIGURATIONS SHOWN FOR ILLUSTRATION PURPOSES ONLY.
(SEE APPLICABLE DESIGN PRESSURES ON SHEETS 4, 4.1 AND 4.2
AND ANCHOR INSTALLATION DETAILS ON SHEETS 5 THRU 7)

PRODUCT RENEWAL
as complying with the Florida
Building Code
Acceptance No. 14-0515.04
Expiration Date 5/29/15
By Isbel Chaul
Miami-Dade Product Control

PRODUCT REVISED
as complying with the Florida
Building Code
Acceptance No. 12-0821.17
Expiration Date 5/29/14
By Isbel Chaul
Miami Dade Product Control

Engr: JAVAD AHMAD
CIVIL
FLA. PE # 70592
C.A.N. 3538

JUN 2 0 2013


AL-FAROOQ CORPORATION
ENGINEERS & PRODUCT DEVELOPMENT
1235 S.W. 87 AVE
MIAMI, FLORIDA 33174
TEL. (305) 264-8100 FAX. (305) 262-6978
COMP-ANL\W05-32GWL


SERIES 200S ALUM SLIDING GLASS DOOR (S.M.I.)

GLASSWALL, LLC
3550 N.W. 49 STREET
MIAMI, FL. 33142
TEL. (305) 638-5151 FAX. (305) 638-5158

revisions:

| no | date | by | description |
|---|---|---|---|
| A | 03.26.13 | | NO CHANGE THIS SHEET |
| B | 04.19.13 | | LAMI GLASS DETAILS REMOVED |
| C | 06.19.13 | | REV PER RER COMMENTS |

date: 01-03-13
scale: 1/2"=1'-0"
dr. by: TARIQ
chk. by:

drawing no.
W13-02

| DESIGN LOAD CAPACITY - PSF<br>H.D. INTERLOCK AND ASTRAGAL | | | |
|---|---|---|---|
| PANEL WIDTH NOMINAL INCHES | DOOR HEIGHT INCHES | GLASS TYPE "E" | |
| | | EXT.(+) | INT.(-) |
| 36 | 82 TO 96 | 110.0 | 135.0 |
| 39 | | 110.0 | 135.0 |
| 42 | | 110.0 | 135.0 |
| 45 | | 110.0 | 135.0 |
| 48 | | 110.0 | 135.0 |
| 50 | | 110.0 | 135.0 |
| 51 | | 110.0 | 135.0 |
| 54 | | 110.0 | 135.0 |
| 60 | | 110.0 | 135.0 |
| 36 | 102 | 110.0 | 135.0 |
| 39 | | 110.0 | 135.0 |
| 42 | | 110.0 | 135.0 |
| 45 | | 110.0 | 135.0 |
| 48 | | 110.0 | 135.0 |
| 50 | | 110.0 | 135.0 |
| 51 | | 110.0 | 135.0 |
| 54 | | 110.0 | 135.0 |
| 60 | | 110.0 | 135.0 |
| 36 | 104 | 110.0 | 135.0 |
| 39 | | 110.0 | 135.0 |
| 42 | | 110.0 | 135.0 |
| 45 | | 110.0 | 135.0 |
| 48 | | 110.0 | 135.0 |
| 50 | | 110.0 | 135.0 |
| 51 | | 110.0 | 135.0 |
| 54 | | 110.0 | 135.0 |
| 36 | 108 | 110.0 | 135.0 |
| 39 | | 110.0 | 135.0 |
| 42 | | 110.0 | 135.0 |
| 45 | | 110.0 | 135.0 |
| 48 | | 110.0 | 135.0 |
| 50 | | 110.0 | 135.0 |
| 51 | | 110.0 | 135.0 |
| 54 | | 110.0 | 135.0 |
| 36 | 114 | 110.0 | 135.0 |
| 39 | | 110.0 | 135.0 |
| 42 | | 110.0 | 135.0 |
| 45 | | 110.0 | 135.0 |
| 48 | | 110.0 | 135.0 |
| 50 | | 110.0 | 134.3 |
| 51 | | 110.0 | 132.4 |
| 36 | 120 | 110.0 | 135.0 |
| 39 | | 110.0 | 135.0 |
| 42 | | 110.0 | 135.0 |
| 45 | | 110.0 | 135.0 |
| 48 | | 110.0 | 129.7 |
| 50 | | 110.0 | 125.8 |
| 51 | | 110.0 | 124.0 |

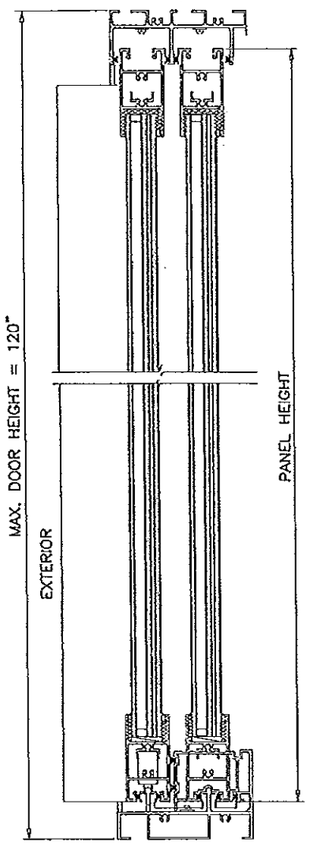


PANEL HEIGHT = DOOR HEIGHT - 3"

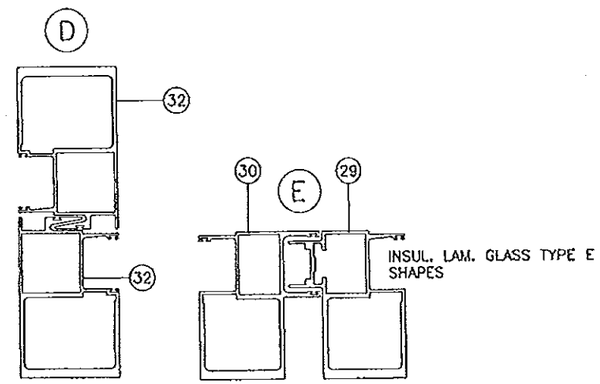


H.D. INTERLOCKS AND ASTRAGALS

NOTES:
GLASS CAPACITIES ON THIS SHEET ARE BASED ON ASTM E1300-04 (3 SEC. GUSTS) AND FLORIDA BUILDING COMMISSION DECLARATORY STATEMENT DCA05-DEC-219

EGRESS REQUIREMENTS TO BE REVIEWED BY BUILDING OFFICIAL.

PRODUCT RENEWED
as complying with the Florida Building Code
Acceptance No 14-0515.04
Expiration Date 5/23/15
By
Miami Dade Product Control

PRODUCT REVISED
as complying with the Florida Building Code
Acceptance No 12-0821.17
Expiration Date 5/29/14
By
Miami Dade Product Control

Engr: JAVAD AHMAD
CIVIL
FLA. PE # 70592
C.A.N. 3538
JUN 2 0 2013


AL-FAROOQ CORPORATION
ENGINEERS & PRODUCT DEVELOPMENT
1235 S.W. 87 AVE
MIAMI, FLORIDA 33174
TEL. (305) 264-3100 FAX. (305) 262-6973


COMP-ANL\W05-32GWL

SERIES 200S ALUM SLIDING GLASS DOOR (S.M.I.)


GLASSWALL, LLC
3550 N.W. 49 STREET
MIAMI, FL. 33142
TEL. (305) 638-5151 FAX. (305) 638-5158


revisions:

| no | date | by | description |
|---|---|---|---|
| A | 03.25.13 | | TOP & BOTTOM RAIL. REV. |
| C | 06.19.13 | | REV PER RER COMMENTS |

date: 01-03-13
scale: 1/2" = 1"
dr. by: TARIQ
chk. by:

drawing no.
W13-02

sheet 4 of 11

## HEAD ANCHOR LOAD CAPACITY - PSF

| PANEL WIDTH NOMINAL INCHES | DOOR HEIGHT INCHES | ANCHORS TYPE 'A' 1/2" SHIM SPACE 6 ANCHORS AT MTG. STILE ENDS EXT. (+) INT. (-) | ANCHORS TYPE 'A' 1/2" SHIM SPACE 8 ANCHORS AT MTG. STILE ENDS EXT. (+) INT. (-) | ANCHORS TYPE 'A' 3/8" SHIM SPACE 6 ANCHORS AT MTG. STILE ENDS EXT. (+) INT. (-) | ANCHORS TYPE 'A' 3/8" SHIM SPACE 8 ANCHORS AT MTG. STILE ENDS EXT. (+) INT. (-) | ANCHORS TYPE 'B' 1/2" SHIM SPACE 6 ANCHORS AT MTG. STILE ENDS EXT. (+) INT. (-) | ANCHORS TYPE 'B' 1/2" SHIM SPACE 8 ANCHORS AT MTG. STILE ENDS EXT. (+) INT. (-) | ANCHORS TYPE 'B' 3/8" SHIM SPACE 6 ANCHORS AT MTG. STILE ENDS EXT. (+) INT. (-) | ANCHORS TYPE 'B' 3/8" SHIM SPACE 8 ANCHORS AT MTG. STILE ENDS EXT. (+) INT. (-) | ANCHORS 'C' 1/4" SHIM 6 ANCHORS AT MTG. STILE ENDS EXT. (+) INT. (-) |
|---|---|---|---|---|---|---|---|---|---|---|
| 36 | 82 | 135.0 | 135.0 | 135.0 | 135.0 | 135.0 | 135.0 | 135.0 | 135.0 | 135.0 |
| 39 | | 135.0 | 135.0 | 135.0 | 135.0 | 135.0 | 135.0 | 135.0 | 135.0 | 135.0 |
| 42 | | 135.0 | 135.0 | 135.0 | 135.0 | 135.0 | 135.0 | 135.0 | 135.0 | 135.0 |
| 45 | | 135.0 | 135.0 | 135.0 | 135.0 | 135.0 | 135.0 | 135.0 | 135.0 | 135.0 |
| 48 | | 135.0 | 135.0 | 135.0 | 135.0 | 135.0 | 135.0 | 135.0 | 135.0 | 135.0 |
| 50 | | 135.0 | 135.0 | 135.0 | 135.0 | 135.0 | 135.0 | 135.0 | 135.0 | 135.0 |
| 51 | | 135.0 | 135.0 | 135.0 | 135.0 | 135.0 | 135.0 | 135.0 | 135.0 | 135.0 |
| 54 | | 135.0 | 135.0 | 135.0 | 135.0 | 135.0 | 135.0 | 135.0 | 135.0 | 135.0 |
| 60 | | 135.0 | 135.0 | 135.0 | 135.0 | 135.0 | 135.0 | 135.0 | 135.0 | 135.0 |
| 36 | 84 | 135.0 | 135.0 | 135.0 | 135.0 | 135.0 | 135.0 | 135.0 | 135.0 | 135.0 |
| 39 | | 135.0 | 135.0 | 135.0 | 135.0 | 135.0 | 135.0 | 135.0 | 135.0 | 135.0 |
| 42 | | 135.0 | 135.0 | 135.0 | 135.0 | 135.0 | 135.0 | 135.0 | 135.0 | 135.0 |
| 45 | | 135.0 | 135.0 | 135.0 | 135.0 | 135.0 | 135.0 | 135.0 | 135.0 | 135.0 |
| 48 | | 135.0 | 135.0 | 135.0 | 135.0 | 135.0 | 135.0 | 135.0 | 135.0 | 135.0 |
| 50 | | 135.0 | 135.0 | 135.0 | 135.0 | 135.0 | 135.0 | 135.0 | 135.0 | 135.0 |
| 51 | | 135.0 | 135.0 | 135.0 | 135.0 | 135.0 | 135.0 | 135.0 | 135.0 | 135.0 |
| 54 | | 132.5 | 135.0 | 135.0 | 135.0 | 132.5 | 135.0 | 135.0 | 135.0 | 135.0 |
| 60 | | 125.9 | 135.0 | 135.0 | 135.0 | 125.9 | 135.0 | 135.0 | 135.0 | 135.0 |
| 36 | 90 | 135.0 | 135.0 | 135.0 | 135.0 | 135.0 | 135.0 | 135.0 | 135.0 | 135.0 |
| 39 | | 135.0 | 135.0 | 135.0 | 135.0 | 135.0 | 135.0 | 135.0 | 135.0 | 135.0 |
| 42 | | 135.0 | 135.0 | 135.0 | 135.0 | 135.0 | 135.0 | 135.0 | 135.0 | 135.0 |
| 45 | | 134.3 | 135.0 | 135.0 | 135.0 | 134.3 | 135.0 | 135.0 | 135.0 | 135.0 |
| 48 | | 128.7 | 135.0 | 135.0 | 135.0 | 128.7 | 135.0 | 135.0 | 135.0 | 135.0 |
| 50 | | 125.5 | 135.0 | 135.0 | 135.0 | 125.5 | 135.0 | 135.0 | 135.0 | 135.0 |
| 51 | | 124.0 | 135.0 | 135.0 | 135.0 | 124.0 | 135.0 | 135.0 | 135.0 | 135.0 |
| 54 | | 119.9 | 135.0 | 135.0 | 135.0 | 119.9 | 135.0 | 135.0 | 135.0 | 135.0 |
| 60 | | 113.3 | 135.0 | 135.0 | 135.0 | 113.3 | 135.0 | 128.6 | 135.0 | 135.0 |
| 36 | 96 | 135.0 | 135.0 | 135.0 | 135.0 | 135.0 | 135.0 | 135.0 | 135.0 | 135.0 |
| 39 | | 135.0 | 135.0 | 135.0 | 135.0 | 135.0 | 135.0 | 135.0 | 135.0 | 135.0 |
| 42 | | 129.5 | 135.0 | 135.0 | 135.0 | 129.5 | 135.0 | 135.0 | 135.0 | 135.0 |
| 45 | | 123.3 | 135.0 | 135.0 | 135.0 | 123.3 | 135.0 | 135.0 | 135.0 | 135.0 |
| 48 | | 118.0 | 135.0 | 135.0 | 135.0 | 118.0 | 135.0 | 134.0 | 135.0 | 135.0 |
| 50 | | 114.9 | 135.0 | 135.0 | 135.0 | 114.9 | 135.0 | 130.5 | 135.0 | 135.0 |
| 51 | | 113.4 | 135.0 | 135.0 | 135.0 | 113.4 | 135.0 | 128.8 | 135.0 | 135.0 |
| 54 | | 109.4 | 135.0 | 134.5 | 135.0 | 109.4 | 135.0 | 124.3 | 135.0 | 135.0 |
| 60 | | 103.0 | 135.0 | 126.5 | 135.0 | 103.0 | 135.0 | 116.9 | 135.0 | 135.0 |
| 36 | 102 | 134.9 | 135.0 | 135.0 | 135.0 | 134.9 | 135.0 | 135.0 | 135.0 | 135.0 |
| 39 | | 126.7 | 135.0 | 135.0 | 135.0 | 126.7 | 135.0 | 135.0 | 135.0 | 135.0 |
| 42 | | 119.9 | 135.0 | 135.0 | 135.0 | 119.9 | 135.0 | 135.0 | 135.0 | 135.0 |
| 45 | | 114.0 | 135.0 | 135.0 | 135.0 | 114.0 | 135.0 | 129.4 | 135.0 | 135.0 |
| 48 | | 108.9 | 135.0 | 133.8 | 135.0 | 108.9 | 135.0 | 123.7 | 135.0 | 135.0 |
| 50 | | 105.9 | 135.0 | 130.2 | 135.0 | 105.9 | 135.0 | 120.3 | 135.0 | 135.0 |
| 51 | | 104.5 | 135.0 | 128.4 | 135.0 | 104.5 | 135.0 | 118.7 | 135.0 | 135.0 |
| 54 | | 100.7 | 134.3 | 123.7 | 135.0 | 100.7 | 134.3 | 114.3 | 135.0 | 135.0 |
| 60 | | 94.4 | 125.9 | 116.0 | 135.0 | 94.4 | 125.9 | 107.2 | 135.0 | 135.0 |
| 36 | 104 | 131.7 | 135.0 | 135.0 | 135.0 | 131.7 | 135.0 | 135.0 | 135.0 | 135.0 |
| 39 | | 123.7 | 135.0 | 135.0 | 135.0 | 123.7 | 135.0 | 135.0 | 135.0 | 135.0 |
| 42 | | 117.0 | 135.0 | 135.0 | 135.0 | 117.0 | 135.0 | 132.8 | 135.0 | 135.0 |
| 45 | | 111.2 | 135.0 | 135.0 | 135.0 | 111.2 | 135.0 | 126.3 | 135.0 | 135.0 |
| 48 | | 106.2 | 135.0 | 130.5 | 135.0 | 106.2 | 135.0 | 120.6 | 135.0 | 135.0 |
| 50 | | 103.2 | 135.0 | 126.9 | 135.0 | 103.2 | 135.0 | 117.2 | 135.0 | 135.0 |
| 51 | | 101.9 | 135.0 | 125.2 | 135.0 | 101.9 | 135.0 | 115.7 | 135.0 | 135.0 |
| 54 | | 98.1 | 130.8 | 120.5 | 135.0 | 98.1 | 130.8 | 111.4 | 135.0 | 135.0 |

## HEAD ANCHOR LOAD CAPACITY - PSF

| PANEL WIDTH NOMINAL INCHES | DOOR HEIGHT INCHES | ANCHORS TYPE 'A' 1/2" SHIM SPACE 6 ANCHORS AT MTG. STILE ENDS EXT. (+) INT. (-) | ANCHORS TYPE 'A' 1/2" SHIM SPACE 8 ANCHORS AT MTG. STILE ENDS EXT. (+) INT. (-) | ANCHORS TYPE 'A' 3/8" SHIM SPACE 6 ANCHORS AT MTG. STILE ENDS EXT. (+) INT. (-) | ANCHORS TYPE 'A' 3/8" SHIM SPACE 8 ANCHORS AT MTG. STILE ENDS EXT. (+) INT. (-) | ANCHORS TYPE 'B' 1/2" SHIM SPACE 6 ANCHORS AT MTG. EXT. (+) INT. (-) | ANCHORS TYPE 'B' 1/2" SHIM SPACE 8 ANCHORS AT MTG. STILE ENDS EXT. (+) INT. (-) | ANCHORS TYPE 'B' 3/8" SHIM SPACE 6 ANCHORS AT MTG. STILE ENDS EXT. (+) INT. (-) | ANCHORS TYPE 'B' 3/8" SHIM SPACE 8 ANCHORS AT MTG. STILE ENDS EXT. (+) INT. (-) | ANCHORS 'C' 1/4" SHIM 6 ANCHORS AT MTG. STILE ENDS EXT. (+) INT. (-) |
|---|---|---|---|---|---|---|---|---|---|---|
| 36 | 108 | 125.9 | 135.0 | 135.0 | 135.0 | 125.9 | 135.0 | 135.0 | 135.0 | 135.0 |
| 39 | | 118.2 | 135.0 | 135.0 | 135.0 | 118.2 | 135.0 | 134.2 | 135.0 | 135.0 |
| 42 | | 111.6 | 135.0 | 135.0 | 135.0 | 111.6 | 135.0 | 126.7 | 135.0 | 135.0 |
| 45 | | 106.0 | 135.0 | 130.2 | 135.0 | 106.0 | 135.0 | 120.4 | 135.0 | 135.0 |
| 48 | | 101.1 | 134.9 | 124.3 | 135.0 | 101.1 | 134.9 | 114.9 | 135.0 | 135.0 |
| 50 | | 98.3 | 131.0 | 120.8 | 135.0 | 98.3 | 131.0 | 111.6 | 135.0 | 135.0 |
| 51 | | 96.9 | 129.2 | 119.1 | 135.0 | 96.9 | 129.2 | 110.1 | 135.0 | 135.0 |
| 54 | | 93.2 | 124.3 | 114.6 | 135.0 | 93.2 | 124.3 | 105.9 | 135.0 | 135.0 |
| 36 | 114 | 118.0 | 135.0 | 135.0 | 135.0 | 118.0 | 135.0 | 134.0 | 135.0 | 135.0 |
| 39 | | 110.7 | 135.0 | 135.0 | 135.0 | 110.7 | 135.0 | 125.7 | 135.0 | 135.0 |
| 42 | | 104.4 | 135.0 | 128.3 | 135.0 | 104.4 | 135.0 | 118.6 | 135.0 | 135.0 |
| 45 | | 99.0 | 132.1 | 121.7 | 135.0 | 99.0 | 132.1 | 112.5 | 135.0 | 135.0 |
| 48 | | 94.4 | 125.9 | 116.0 | 135.0 | 94.4 | 125.9 | 107.2 | 135.0 | 135.0 |
| 50 | | 91.6 | 122.2 | 112.6 | 135.0 | 91.6 | 122.2 | 104.1 | 135.0 | 135.0 |
| 51 | | 90.4 | 120.5 | 111.0 | 135.0 | 90.4 | 120.5 | 102.6 | 135.0 | 135.0 |
| 36 | 120 | 111.1 | 135.0 | 135.0 | 135.0 | 111.1 | 135.0 | 126.1 | 135.0 | 135.0 |
| 39 | | 104.0 | 135.0 | 127.9 | 135.0 | 104.0 | 135.0 | 118.2 | 135.0 | 135.0 |
| 42 | | 98.1 | 130.8 | 120.5 | 135.0 | 98.1 | 130.8 | 111.4 | 135.0 | 135.0 |
| 45 | | 92.9 | 123.9 | 114.2 | 135.0 | 92.9 | 123.9 | 105.6 | 135.0 | 135.0 |
| 48 | | 88.5 | 118.0 | 108.8 | 135.0 | 88.5 | 118.0 | 100.5 | 134.0 | 135.0 |
| 50 | | 85.9 | 114.5 | 105.5 | 135.0 | 85.9 | 114.5 | 97.5 | 130.0 | 135.0 |
| 51 | | 84.6 | 112.8 | 104.0 | 135.0 | 84.6 | 112.8 | 96.1 | 128.1 | 135.0 |

NOTE:
ANCHOR CAPACITY CHART ON THIS SHEET TO BE REVIEWED IN CONJUNCTION WITH SILL ANCHOR CAPACITY CHART ON SHEET 4.2 AND DESIGN LOAD CAPACITY CHART ON SHEET 4. LOWER VALUES FROM CHARTS SHALL CONTROLL THE ENTIRE ASSEMBLY.

PRODUCT RENEWED
as complying with the Florida Building Code
Acceptance No. 14-0515.04
Expiration Date 5/29/15
By Ishaq I. Chaudhry
Miami Dade Product Control

PRODUCT REVISED
as complying with the Florida Building Code
Acceptance No. 12-0821.17
Expiration Date 5/29/14
By Ishaq I. Chaudhry
Miami Dade Product Control

Engr: JAVAD AHMAD
CIVIL
FLA. PE # 70592
C.A.N. 3538

JUN 20 2013


AL-FAROOQ CORPORATION
ENGINEERS & PRODUCT DEVELOPMENT
1235 S.W. 87 AVE.
MIAMI, FLORIDA 33174
TEL. (305) 264-8400 FAX. (305) 262-6973
COMP-ANL\W05-32GWL


SERIES 200S ALUM SLIDING GLASS DOOR (S.M.L.)

GLASSWALL, LLC
3550 N.W. 49 STREET
MIAMI, FL. 33142
TEL. (305) 638-5151 FAX. (305) 638-5158

revisions:

| no. | date | by | description |
|---|---|---|---|
| A | 03.25.13 | | CHART REVISED |
| B | 04.19.13 | | LAMI GLASS DETAILS REMOVED |
| C | 06.19.13 | | NO CHANGE THIS SHEET |

date: 01-03-13
scale: 1/2" = 1"
dr. by: TARIQ
chk. by:

drawing no.
W13-02

sheet 4.1 of 11

| SILL ANCHOR LOAD CAPACITY - PSF | | |
|---|---|---|
| | | ANCHORS TYPE 'A' |
| | | 1/4" SHIM SPACE OR 1/2" POURED & HARDENED GROUT |
| | | 6 ANCHORS AT STILE ENDS |
| PANEL WIDTH NOMINAL INCHES | DOOR HEIGHT INCHES | EXT. (+) INT. (-) |
| 36 | 82 | 135.0 |
| 39 | | 135.0 |
| 42 | | 135.0 |
| 45 | | 135.0 |
| 48 | | 135.0 |
| 50 | | 135.0 |
| 51 | | 135.0 |
| 54 | | 135.0 |
| 60 | | 135.0 |
| 36 | 84 | 135.0 |
| 39 | | 135.0 |
| 42 | | 135.0 |
| 45 | | 135.0 |
| 48 | | 135.0 |
| 50 | | 135.0 |
| 51 | | 135.0 |
| 54 | | 135.0 |
| 60 | | 135.0 |
| 36 | 90 | 135.0 |
| 39 | | 135.0 |
| 42 | | 135.0 |
| 45 | | 135.0 |
| 48 | | 135.0 |
| 50 | | 135.0 |
| 51 | | 135.0 |
| 54 | | 135.0 |
| 60 | | 135.0 |
| 36 | 96 | 135.0 |
| 39 | | 135.0 |
| 42 | | 135.0 |
| 45 | | 135.0 |
| 48 | | 135.0 |
| 50 | | 135.0 |
| 51 | | 135.0 |
| 54 | | 135.0 |
| 60 | | 135.0 |
| 36 | 102 | 135.0 |
| 39 | | 135.0 |
| 42 | | 135.0 |
| 45 | | 135.0 |
| 48 | | 135.0 |
| 50 | | 135.0 |
| 51 | | 135.0 |
| 54 | | 135.0 |
| 60 | | 135.0 |
| 36 | 104 | 135.0 |
| 39 | | 135.0 |
| 42 | | 135.0 |
| 45 | | 135.0 |
| 48 | | 135.0 |
| 50 | | 135.0 |
| 51 | | 135.0 |
| 54 | | 135.0 |

| SILL ANCHOR LOAD CAPACITY - PSF | | |
|---|---|---|
| | | ANCHORS TYPE 'A' |
| | | 1/4" SHIM SPACE OR 1/2" POURED & HARDENED GROUT |
| | | 6 ANCHORS AT STILE ENDS |
| PANEL WIDTH NOMINAL INCHES | DOOR HEIGHT INCHES | EXT. (+) INT. (-) |
| 36 | 108 | 135.0 |
| 39 | | 135.0 |
| 42 | | 135.0 |
| 45 | | 135.0 |
| 48 | | 135.0 |
| 50 | | 135.0 |
| 51 | | 135.0 |
| 54 | | 135.0 |
| 36 | 114 | 135.0 |
| 39 | | 135.0 |
| 42 | | 135.0 |
| 45 | | 135.0 |
| 48 | | 135.0 |
| 50 | | 135.0 |
| 51 | | 135.0 |
| 36 | 120 | 135.0 |
| 39 | | 135.0 |
| 42 | | 135.0 |
| 45 | | 135.0 |
| 48 | | 135.0 |
| 50 | | 135.0 |
| 51 | | 135.0 |

NOTE:
ANCHOR CAPACITY CHART ON THIS SHEET TO BE REVIEWED IN CONJUNCTION WITH HEAD ANCHOR CAPACITY CHART ON SHEET 4.1 AND DESIGN LOAD CAPACITY CHART ON SHEET 4. LOWER VALUES FROM CHARTS SHALL CONTROLL THE ENTIRE ASSEMBLY.

PRODUCT RENEWED
as complying with the Florida Building Code
Acceptance No. 14-0515.04
Expiration Date 5/29/15
By Ishan I. Chang
Miami Dade Product Control

PRODUCT REVISED
as complying with the Florida Building Code
Acceptance No. 12-0821.17
Expiration Date 5/29/14
By Ishan I. Chang
Miami Dade Product Control

Engr: JAVAD AHMAD
CIVIL
FLA. PE # 70592
C.A.N. 3538

JUN 20 2013


AL-FAROOQ CORPORATION
ENGINEERS & PRODUCT DEVELOPMENT
1235 S.W. 87 AVE
MIAMI, FLORIDA 33174
TEL. (305) 264-8100 FAX. (305) 262-6978
COMP-ANL\W05-32GWL


SERIES 200S ALUM SLIDING GLASS DOOR (S.M.L.)

GLASSWALL, LLC
3550 N.W. 49 STREET
MIAMI, FL. 33142
TEL. (305) 638-5151 FAX. (305) 638-5158

revisions:

| no | date | by | description |
|---|---|---|---|
| A | 03.25.13 | | NEW PAGE |
| B | 04.19.13 | | LAMI GLASS DETAILS REMOVED |
| C | 06.19.13 | | NO CHANGE THIS SHEET |

date: 01-03-13
scale: 1/2" = 1"
dr. by: TARIQ
chk. by:

drawing no.
W13-02

sheet 4.2 of 11

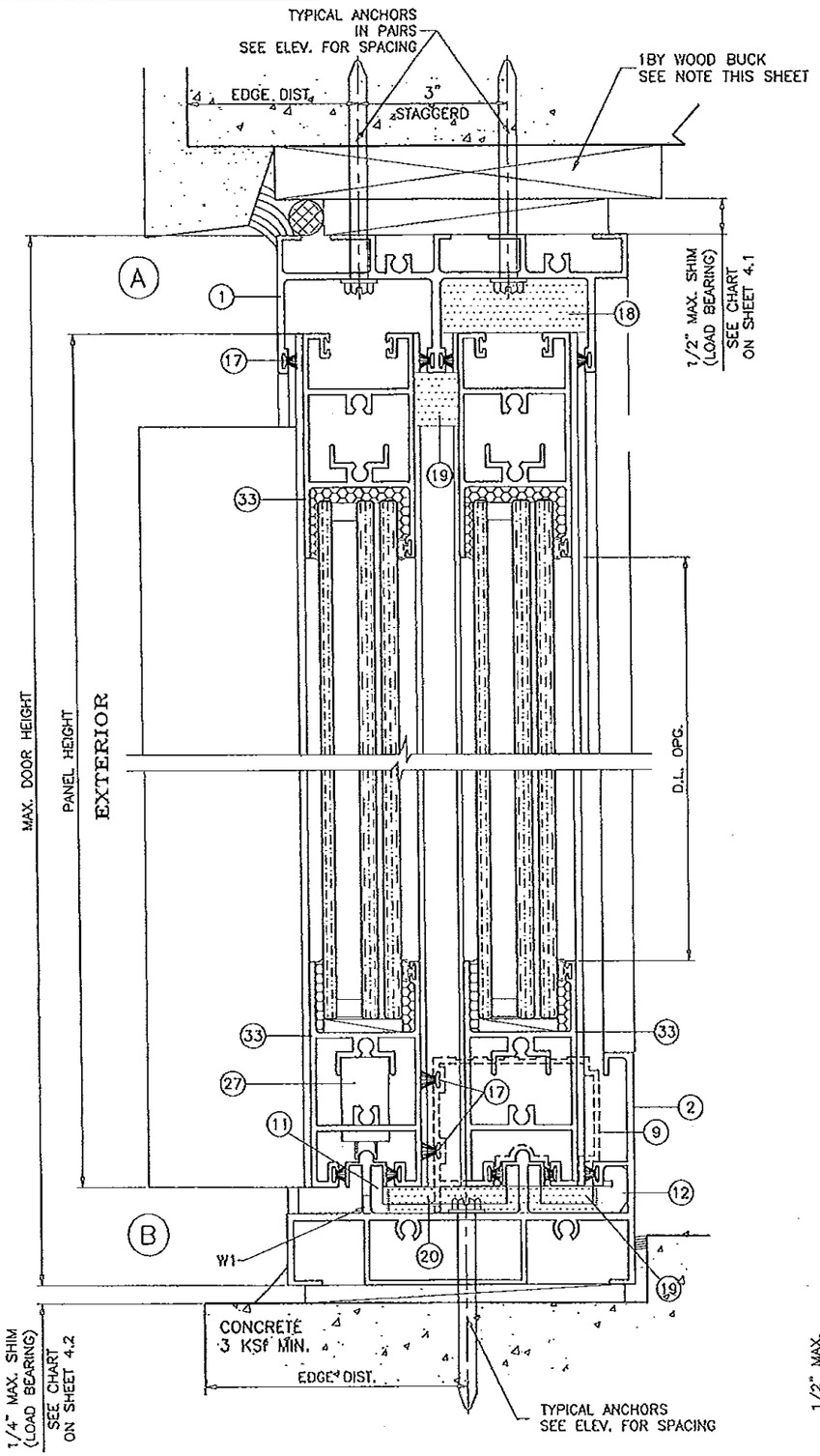


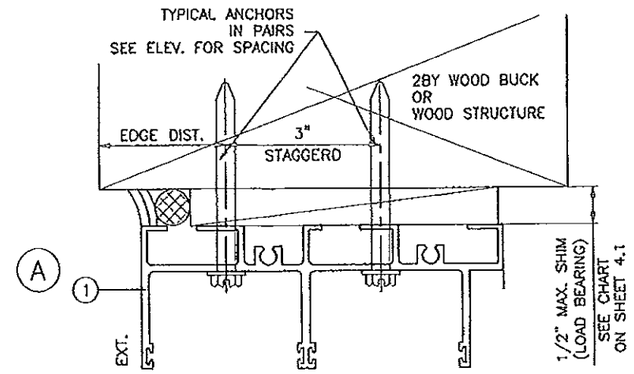


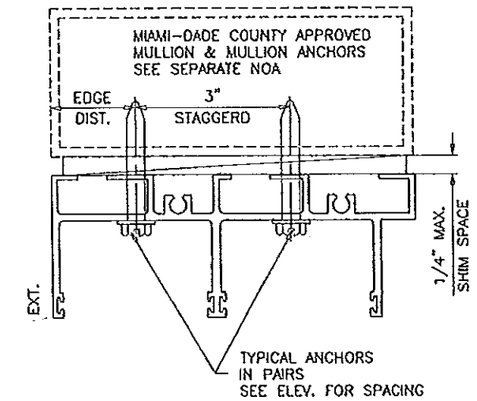


1BY OR 2BY WOOD BUCKS AND METAL STRUCTURES NOT BY GLASSWALL MUST SUPPORT LOADS IMPOSED BY GLAZING SYSTEM AND TRANSFER THEM TO THE BUILDING STRUCTURE.

PRODUCT RENEWED
as complying with the Florida
Building Code
Acceptance No. 14-0515.04
Expiration Date 5/09/15
By
Miami Dade Product Control

## SEALANTS:

ALL FRAME AND PANEL JOINT, INSTALLATION SCREWS AND HEADS OF ANCHOR SCREWS AT SILL TO BE SEALED WITH BLACK/ALUM COLORED SILICONE.

## WEEPS:

W1 = 1/4" X 2-1/2" WEEP SLOTS AT 10" FROM ENDS

PRODUCT REVISED
as complying with the Florida
Building Code
Acceptance No. 12-0821.17
Expiration Date 5/28/14
By
Miami Dade Product Control

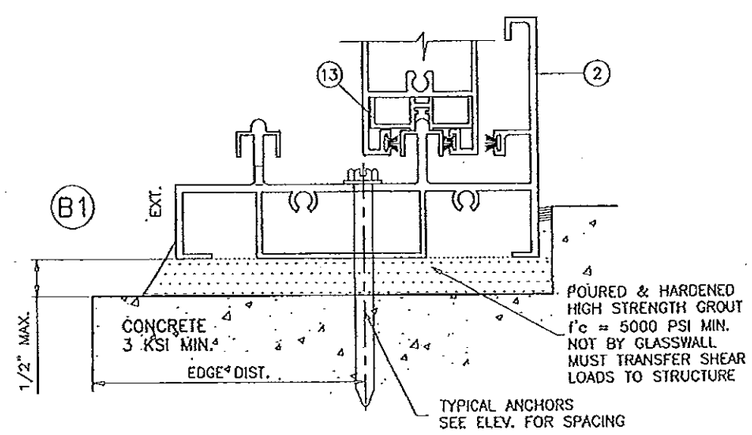


Engr: JAVAD AHMAD
CIVIL
FLA. PE # 70592
C.A.N. 3538

JUN 20 2013


AL-FAROOQ CORPORATION
ENGINEERS & PRODUCT DEVELOPMENT
1235 S.W. 87 AVE
MIAMI, FLORIDA 33174
TEL. (305) 264-8100 FAX. (305) 262-6978
COMP-ANL\W05-32GWL


SERIES 200S ALUM SLIDING GLASS DOOR (S.M.I.)

GLASSWALL, LLC
3550 N.W. 49 STREET
MIAMI, FL. 33142
TEL. (305) 638-5151 FAX. (305) 638-5158

revisions:

| no | date | by | description |
|---|---|---|---|
| A | 03.25.13 | | TOP & BOTTOM RAIL REV. |
| B | 04.19.13 | | LAMI GLASS DETAILS REMOVED |
| C | 06.19.13 | | REV PER RER COMMENTS |

date: 01-03-13
scale: 1/2" = 1"
dr. by: TARIQ
chk. by:

drawing no.
W13-02

sheet 5 of 11

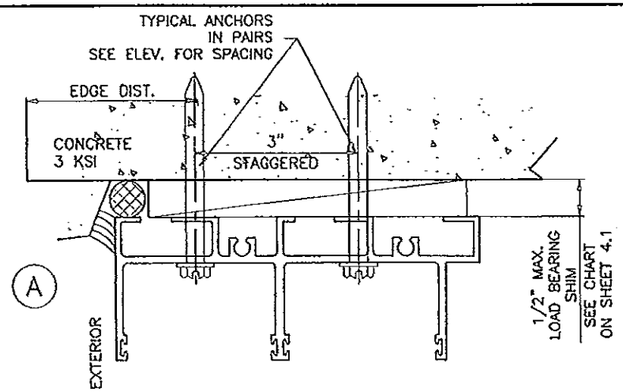


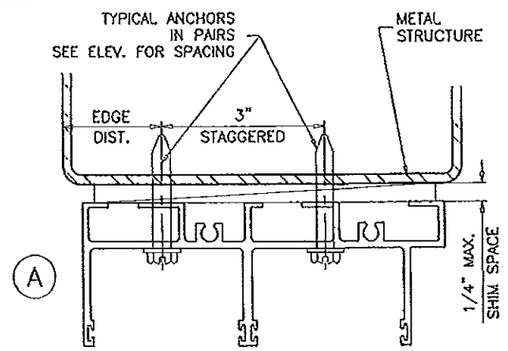


TYPICAL ANCHORS: SEE ELEV. FOR SPACING

AT HEAD

TYPE 'A'

1/4" DIA HILTI KWIK-CON II (Fu=163 KSI, Fy=157 KSI)

DIRECTLY INTO CONCRETE
1-1/4" MIN. CONC. EMBEDMENT

TYPE 'B'

1/4" DIA HILTI KWIK-CON II (Fu=163 KSI, Fy=157 KSI)

THRU 1BY BUCKS INTO CONC., 1-1/4" MIN. CONC. EMBED.
INTO 2BY BUCKS, 1-1/2" MIN. WOOD EMBEDMENT

TYPE 'C'

1/4" TEKS OR SELF DRILLING SCREWS (GRADE 5 CRS)

1/4" ST. STEEL SMS (CW) (GRADE 2)

INTO METAL STRUCTURES OR APPROVED MULLIONS

STEEL : 1/8" THK. MIN. (Fy = 36 KSI MIN.)
ALUMINUM : 1/8" THK. MIN. (6063-T5 MIN.)
(STEEL IN CONTACT WITH ALUMINUM TO BE PLATED OR PAINTED)

AT SILL

1/4" DIA HILTI KWIK-CON II (Fu=163 KSI, Fy=157 KSI)

DIRECTLY INTO CONCRETE, 1-1/4" MIN. EMBEDMENT

AT JAMBS

1/4" DIA. HILTI KWIK-CON II (Fu=163 KSI, Fy=157 KSI)

THRU 1BY BUCKS, 1-1/4" MIN. CONC. OR MASONRY EMBED.
INTO 2BY BUCKS, 1-1/2" MIN. WOOD EMBEDMENT
DIRECTLY INTO MASONRY OR CONCRETE
1-1/4" MIN. MASONRY OR CONCRETE EMBEDMENT

1/4" TEKS OR SELF DRILLING SCREWS (GRADE 5 CRS)

1/4" ST. STEEL SMS (CW) (GRADE 2)

INTO METAL STRUCTURES OR APPROVED MULLIONS

STEEL : 1/8" THK. MIN. (Fy = 36 KSI MIN.)
ALUMINUM : 1/8" THK. MIN. (6063-T5 MIN.)
(STEEL IN CONTACT WITH ALUMINUM TO BE PLATED OR PAINTED)

ANCHOR EDGE DISTANCES

INTO CONCRETE = 1-1/2" MIN.
INTO WOOD STRUCTURE = 1" MIN.
INTO METAL STRUCTURE = 3/4" MIN.

CONCRETE AT HEAD OR SILL f'c = 3000 PSI MIN.
CONCRETE AT JAMBS f'c = 3000 PSI MIN.
C-90 HOLLOW/FILLED BLOCK AT JAMBS f'm = 2000 PSI MIN.

PRODUCT RENEWED
as complying with the Florida
Building Code
Acceptance No. 14-0515.04
Expiration Date 5/29/15
By
Miami Dade Product Control

PRODUCT REVISED
as complying with the Florida
Building Code
Acceptance No. 12-0821.17
Expiration Date 5/29/14
By
Miami Dade Product Control

Engr: JAVAD AHMAD
CIVIL
FLA. PE # 70592
C.A.N. 3538

JUN 20 2013

AL-FAROOQ CORPORATION
ENGINEERS & PRODUCT DEVELOPMENT
1235 S.W. 87 AVE
MIAMI, FLORIDA 33174
TEL. (305) 264-8100 FAX. (305) 262-6978
COMP-ANL\W05-32GWL

SERIES 2005 ALUM SLIDING GLASS DOOR (S.M.I.)

GLASSWALL, LLC
3550 N.W. 49 STREET
MIAMI, FL. 33142
TEL. (305) 638-5151 FAX. (305) 638-5158

revisions:

| no | date | by | description |
|---|---|---|---|
| A | 03.26.13 | | NO CHANGE THIS SHEET |
| B | 04.19.13 | | LAMI GLASS DETAILS REMOVED |
| C | 06.19.13 | | NO CHANGE THIS SHEET |

date: 01-03-13
scale: 1/2" = 1"
dr. by: TARIQ
chk. by:

drawing no.
W13-02

sheet 6 of 11

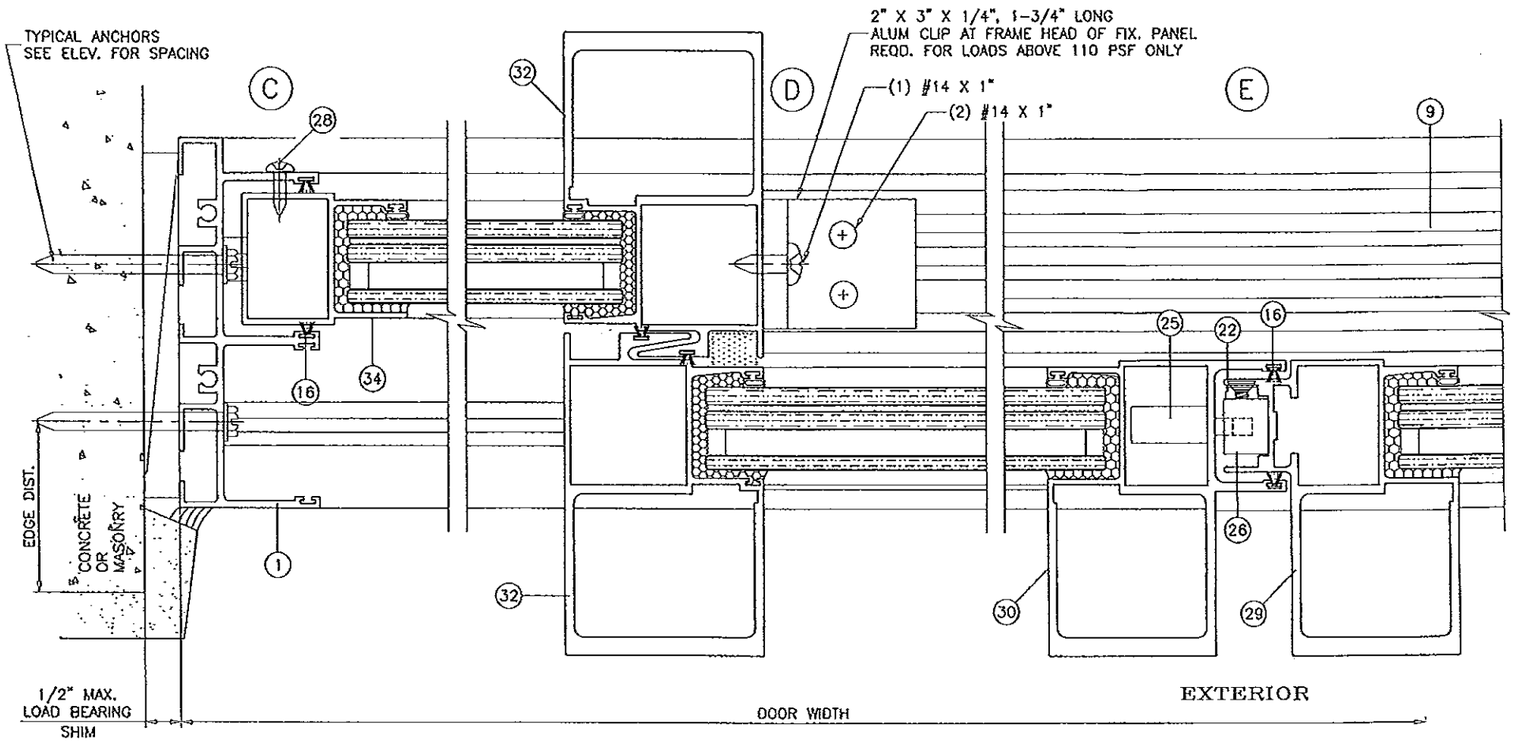


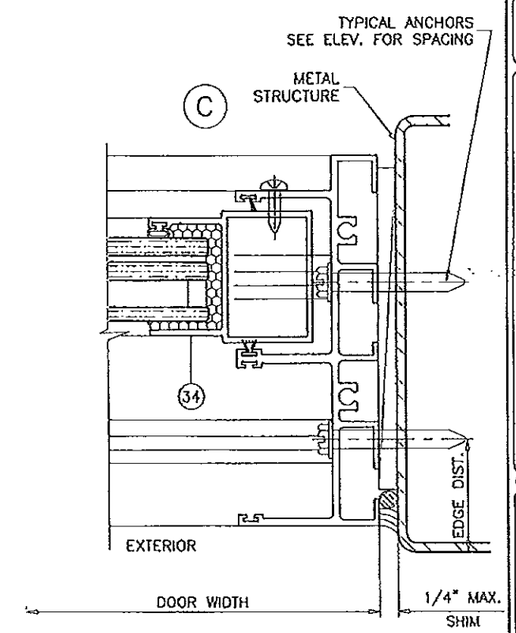


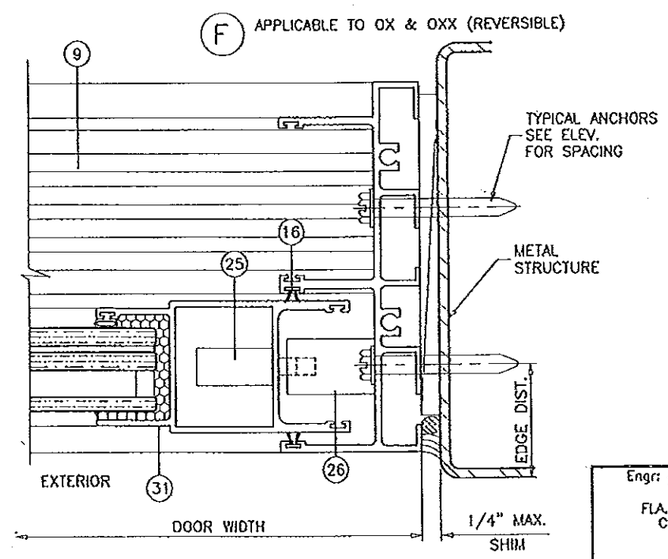


PRODUCT RENEWED
as complying with the Florida
Building Code
Acceptance No. 14-0515.04
Expiration Date 5/29/15
By
Miami Dade Product Control

PRODUCT REVISED
as complying with the Florida
Building Code
Acceptance No. 12-0821.17
Expiration Date 5/24/14
By
Miami Dade Product Control

Engr: JAVAD AHMAD
CIVIL
FLA. PE # 70592
C.A.N. 3538

JUN 2 0 2013


AL-FAROOQ CORPORATION
ENGINEERS & PRODUCT DEVELOPMENT
1235 S.W. 57 AVE
MIAMI, FLORIDA 33174
TEL. (305) 264-8100 FAX. (305) 262-6978
COMP-ANL\W05-32GWL


SERIES 200S ALUM SLIDING GLASS DOOR (S.M.I.)

GLASSWALL, LLC
3550 N.W. 49 STREET
MIAMI, FL. 33142
TEL. (305) 638-5151 FAX. (305) 638-5158

revisions:

| no | date | by | description |
|---|---|---|---|
| A | 03.25.13 | | NO CHANGE THIS SHEET |
| B | 04.19.13 | | LAMI GLASS DETAILS REMOVED |
| C | 06.19.13 | | REV PER RER COMMENTS |

date: 01-03-13
scale: 1/2" = 1"
dr. by: TARIQ
chk. by:

drawing no.
W13-02

ANCHORS AT HEAD/SILL AND FREE STANDING JAMB ENDS
SEE ELEVATION ON SHEET 2.1
(APPLICABLE TO ALL SIZES, AS PERMITTED BY FBC AND CONFIGURATIONS SHOWN BELOW)

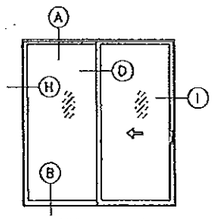


OX (SHOWN)
XO

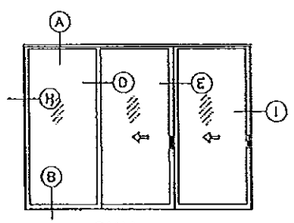


OXX

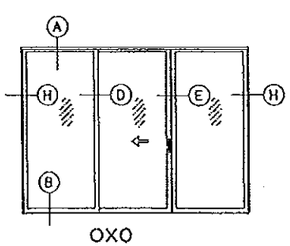


OXO

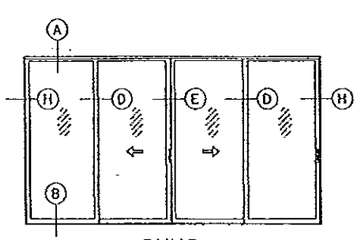


OXXO

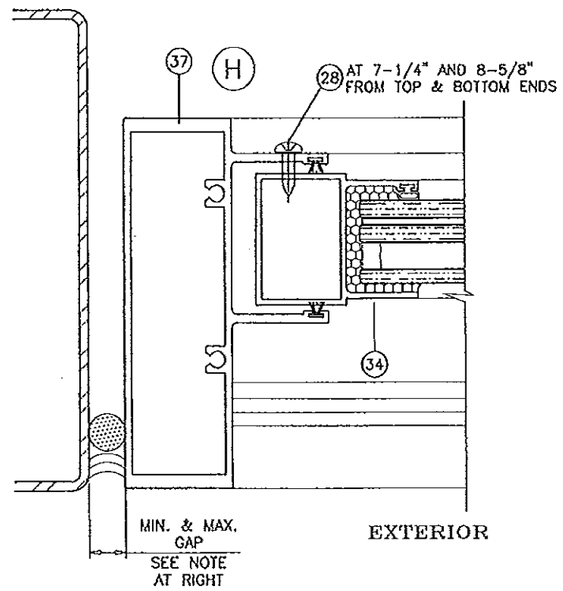


FREE STANDING JAMB
FIXED SIDE

| Ix IN^4 | Sx IN^3 |
|---|---|
| 5.989 | 2.240 |

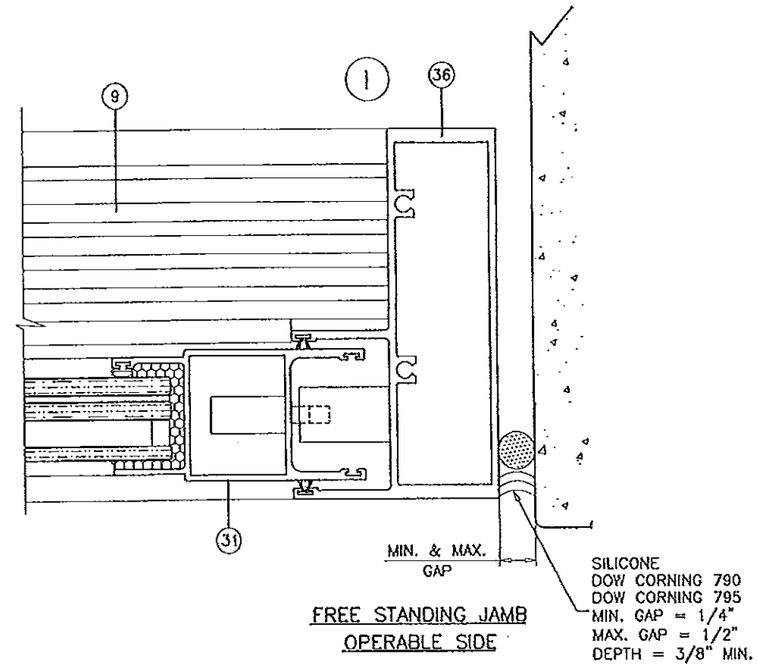


FREE STANDING JAMB
OPERABLE SIDE

PRODUCT RENEWED
as complying with the Florida
Building Code
Acceptance No. 14-0515.04
Expiration Date 5/29/15
By Ishaq I. Chaudhry
Miami Dade Product Control

PRODUCT REVISED
as complying with the Florida
Building Code
Acceptance No. 12-0821.17
Expiration Date 5/29/14
By Ishaq I. Chaudhry
Miami Dade Product Control

Engr: JAVAD AHMAD
CIVIL
FLA. PE # 70592
C.A.N. 3538

JUN 20 2013

MAX. DESIGN LOADS:
(OXO) AND (OXXO) CONFIGURATIONS = ±75.0 PSF
ALL OTHER CONFIGURATIONS = ±72.1 PSF


AL-FAROOQ CORPORATION
ENGINEERS & PRODUCT DEVELOPMENT
1235 S.W. 87 AVE
MIAMI, FLORIDA 33174
TEL. (305) 264-8100 FAX. (305) 262-6978
COMP-ANL\W05-32GWL


SERIES 200S ALUM SLIDING GLASS DOOR (S.M.I.)

GLASSWALL, LLC
3550 N.W. 49 STREET
MIAMI, FL. 33142
TEL. (305) 638-5151 FAX. (305) 638-5158

revisions:

| no | date | by | description |
|---|---|---|---|
| A | 03.25.13 | | NO CHANGE THIS SHEET |
| B | 04.19.13 | | LAMI GLASS DETAILS REMOVED |
| C | 06.19.13 | | REV PER RER COMMENTS |

date: 01-03-13
scale: 1/2" = 1"
dr. by: TARIQ
chk. by:

drawing no.
W13-02

sheet 8 of 11

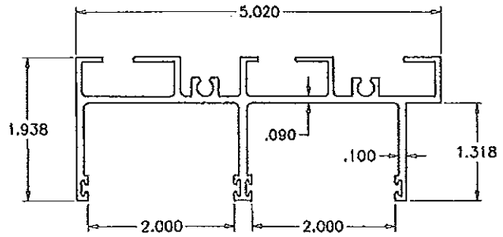


(1) FRAME HEAD/JAMB

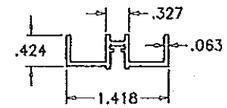


(13) FIXED PANEL SILL ADAPTER

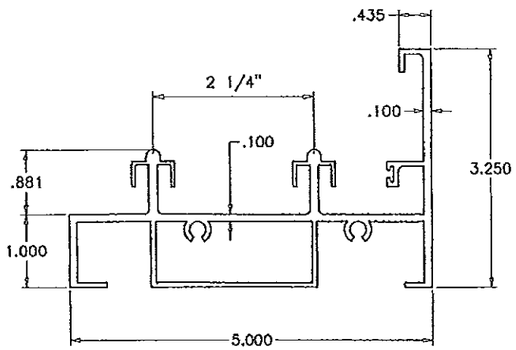


(2) FRAME SILL

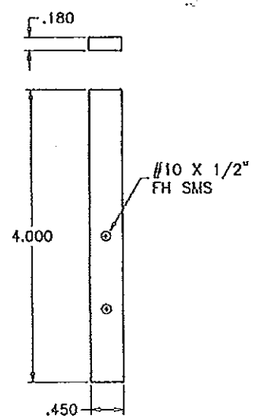


(22) ALUM FILLER BAR

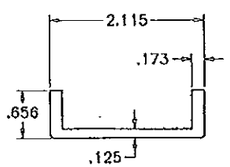


(11) SILL CHANNEL

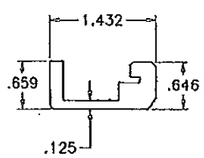


(12) SILL CHANNEL

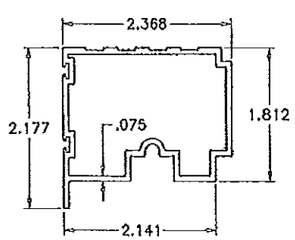


(9) THRESHOLD

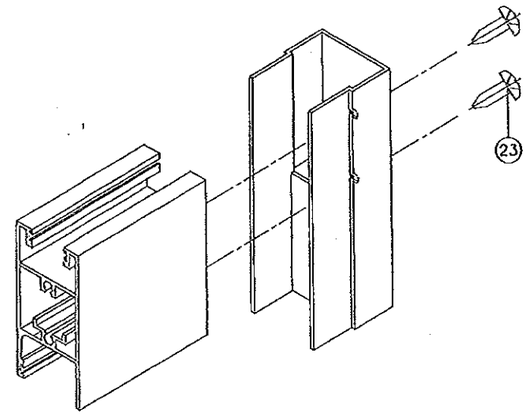


PANEL TOP CORNER

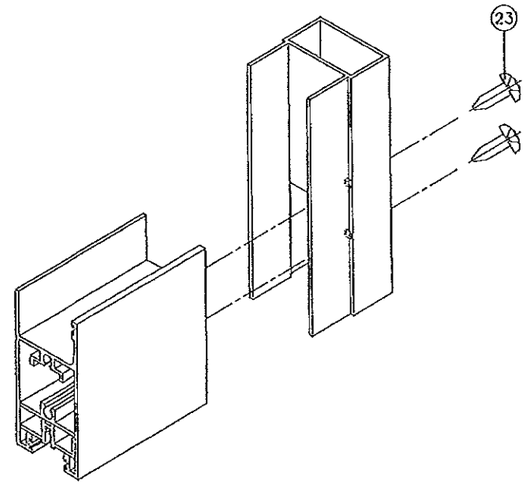


PANEL BOTTOM CORNER

PRODUCT RENEWED
as complying with the Florida
Building Code
Acceptance No. 14-0515.04
Expiration Date 5/29/15
By
Miami Dade Product Control

PRODUCT REVISED
as complying with the Florida
Building Code
Acceptance No. 12-0821.17
Expiration Date 5/29/14
By
Miami Dade Product Control

Engr: JAVAD AHMAD
CIVIL
FLA. PE # 70592
C.A.N. 3538

JUN 2 0 2013

**AL-FAROOQ CORPORATION**
ENGINEERS & PRODUCT DEVELOPMENT
1235 S.W. 87 AVE
MIAMI, FLORIDA 33174
TEL (305) 264-3100 FAX. (305) 262-6978
COMP-ANL\W05-32GWL

SERIES 200S ALUM SLIDING GLASS DOOR (S.M.I.)

GLASSWALL, LLC
3550 N.W. 49 STREET
MIAMI, FL. 33142
TEL. (305) 638-5151 FAX. (305) 638-5158

revisions:

| no. | date | by | description |
|---|---|---|---|
| A | 03.25.13 | | TOP & BOTTOM RAIL REV. |
| B | 04.19.13 | | LAM GLASS DETAILS REMOVED |
| C | 06.19.13 | | REV PER RER COMMENTS |

date: 01-03-13
scale: 1/2" = 1"
dr. by: TARIQ
chk. by:

drawing no.
W13-02

sheet 9 of 11

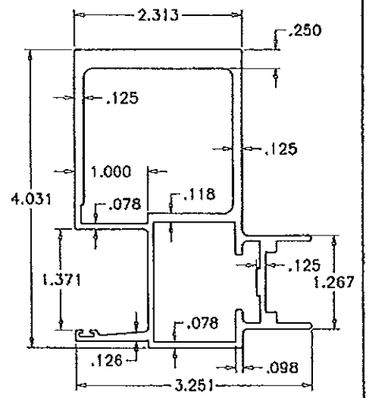


(29) MALE MATING STILE
INSUL. LAM. GLASS

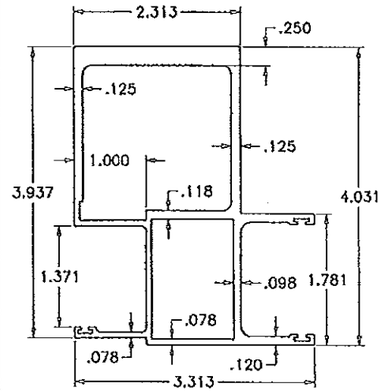


(30) FEMALE MATING STILE
INSUL. LAM. GLASS

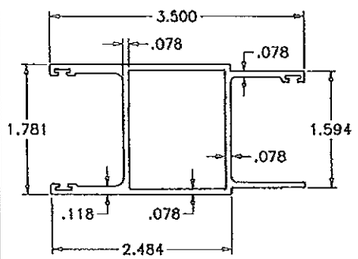


(31) LOCK STILE
INSUL. LAM. GLASS

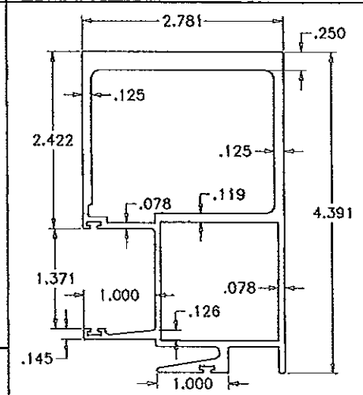


(32) MAJOR INTERLOCK STILE
INSUL. LAM. GLASS

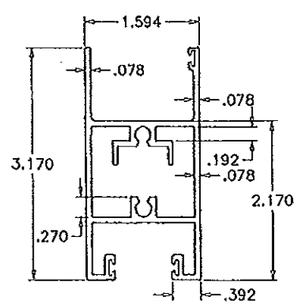


(33) TOP & BOTTOM RAIL
INSUL. LAM. GLASS

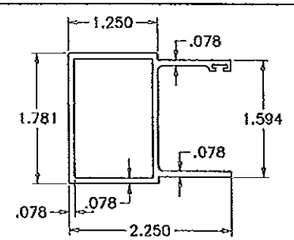


(34) FIXED STILE
INSUL. LAM. GLASS

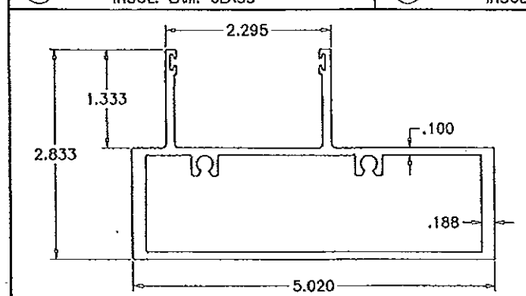


(36) FREE STANDING FRAME JAMB (TYPE1)
LIMIT MAX LOADS TO ±75.0 PSF

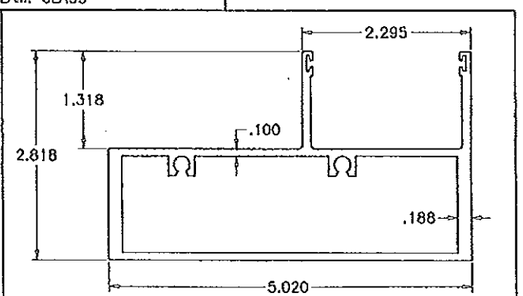


(37) FREE STANDING FRAME JAMB (TYPE 2)
LIMIT MAX LOADS TO ±75.0 PSF

| ITEM # | PART # | QUANTITY | DESCRIPTION | MATERIAL | MANF./SUPPLIER/REMARKS |
|---|---|---|---|---|---|
| 1 | 100-001 | AS REQD. | FRAME HEAD/JAMB | 6063-T6 | - |
| 2 | 100-021 | 1 | FRAME SILL | 6063-T6 | - |
| 9 | 100-022 | 1 | THRESHOLD (LENGTH = OPNG. WIDTH BETWEEN FIXED PANELS) | 6063-T6 | - |
| 11 | 100-013 | 2 | SILL CHANNEL CLIP, 2-7/16" LONG | 6063-T6 | AT INTERLOCK STILES |
| 12 | 100-014 | 2 | SILL CHANNEL CLIP, 2-7/16" LONG | 6063-T6 | AT INTERLOCK STILES |
| 13 | 300-016 | AS REQD. | FIXED PANEL ADAPTER | 6005-T5 | - |
| 15 | 3"x 2"x 1/4" | 1/ FIX PANEL | ANCHOR CLIP (AT TOP OF FIXED PANEL) | ALUMINUM | ANCHOR CLIP |
| 16 | 568-61279 | - | FIN SEAL W'STRIPPING (.270 HT.) | - | ULTRAFAB |
| 17 | 568-62379 | - | FIN SEAL W'STRIPPING (.370 HT) | - | ULTRAFAB |
| 18 | P1000AFK(PC)2 | - | ADHESIVE BACK PILE PAD | - | ULTRAFAB |
| 19 | P6309AFK(PC).75 | - | ADHESIVE BACK PILE PAD | - | ULTRAFAB |
| 20 | P5009AFK(PC)1.75 | - | ADHESIVE BACK PILE PAD | - | ULTRAFAB |
| 22 | - | 1 | FILLER BAR | ALUMINUM | AT LOCK LOCATION @ MALE MTG. STILE ONLY |
| 23 | #14 X 1" | - | FRAME AND PANEL ASS'Y SCREWS | S. STEEL | PH SMS |
| 25 | D-60C | 1 | 3 POINT MORTISE HOOK LOCK | - | DOOR & WINDOW HARDWARE |
| 26 | KP-60 | 1 | LOCK KEEPER | ALUMINUM | DOOR & WINDOW HARDWARE |
| 27 | - | 2/ PANEL | PANEL ROLLERS AT 6" FROM ENDS | S. STEEL | DOOR & WINDOW HARDWARE |
| 28 | #10 X 3/4" | 4/ PANEL | FIXED PANEL SCREWS | S. STEEL | PH SMS |
| 29 | 300-010 | AS REQD. | MALE MATING STILE (INSUL. LAM. GLASS) | 6005-T5 | - |
| 30 | 300-011 | AS REQD. | FEMALE MATING STILE (INSUL. LAM. GLASS) | 6005-T5 | - |
| 31 | 300-012 | AS REQD. | LOCK STILE (INSUL. LAM. GLASS) | 6005-T5 | - |
| 32 | 300-014 | AS REQD. | MAJOR INTERLOCK STILE (INSUL. LAM. GLASS) | 6005-T5 | - |
| 33 | 300-015 | AS REQD. | TOP & BOTTOM RAIL (INSUL. LAM. GLASS) | 6005-T5 | - |
| 34 | 300-017 | AS REQD. | FIXED STILE (INSUL. LAM. GLASS) | 6005-T5 | - |
| 36 | 100-028 | AS REQD. | FREE STANDING FRAME JAMB (TYPE 1) | 6005-T5 | - |
| 37 | 100-029 | AS REQD. | FREE STANDING FRAME JAMB (TYPE 2) | 6005-T5 | - |

PRODUCT RENEWED
as complying with the Florida
Building Code
Acceptance No 14-0515.04
Expiration Date 5/24/15
By Ishwar T. Chand
Miami Dade Product Control

PRODUCT REVISED
as complying with the Florida
Building Code
Acceptance No 12-0821.17
Expiration Date 5/24/14
By Ishwar T. Chand
Miami Dade Product Control

Engr: JAVAD AHMAD
CIVIL
FLA. PE # 70592
C.A.N. 3538

JUN 20 2013


AL-FAROOQ CORPORATION
ENGINEERS & PRODUCT DEVELOPMENT
1235 S.W. 87 AVE
MIAMI, FLORIDA 33174
TEL. (305) 264-8100 FAX. (305) 262-6978


COMP-ANL\W05-32GWL

SERIES 200S ALUM SLIDING GLASS DOOR (S.M.L.)

GLASSWALL, LLC
3550 N.W. 49 STREET
MIAMI, FL. 33142
TEL. (305) 638-5151 FAX. (305) 638-5158

revisions:

| no | date | by | description |
|---|---|---|---|
| A | 03.25.13 | | NO CHANGE THIS SHEET |
| B | 04.19.13 | | LAMI. GLASS DETAILS REMOVED |
| C | 06.19.13 | | REV PER RER COMMENTS |

date: 01-03-13
scale: 1/2" = 1"
dr. by: TARIQ
chk. by:

drawing no.
W13-02

sheet 10 of 11

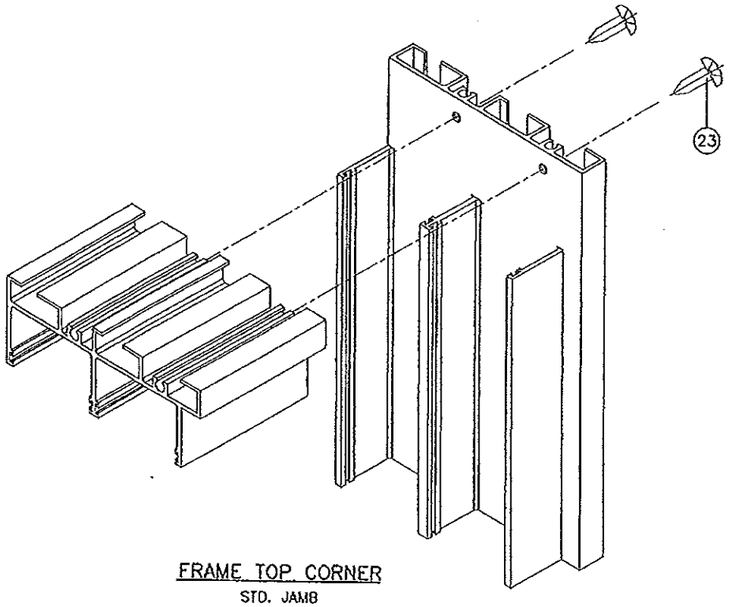


FRAME TOP CORNER
STD. JAMB

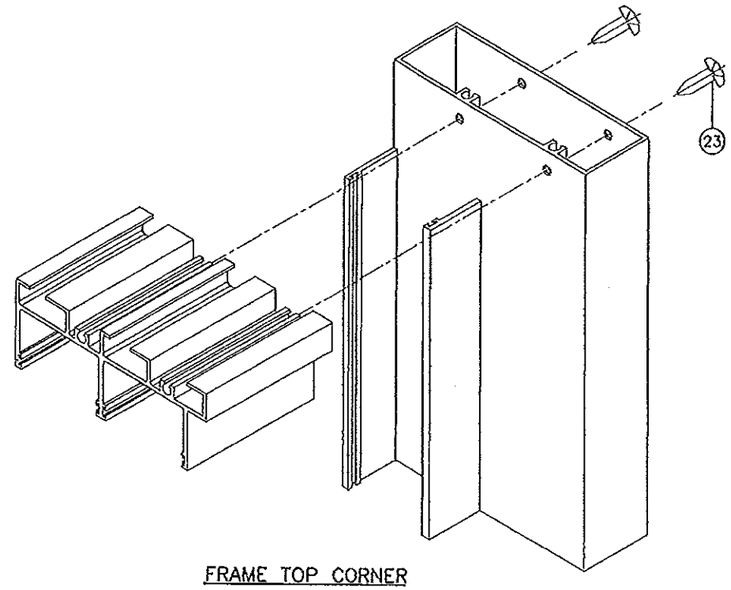


FRAME TOP CORNER
FREE STANDING JAMB

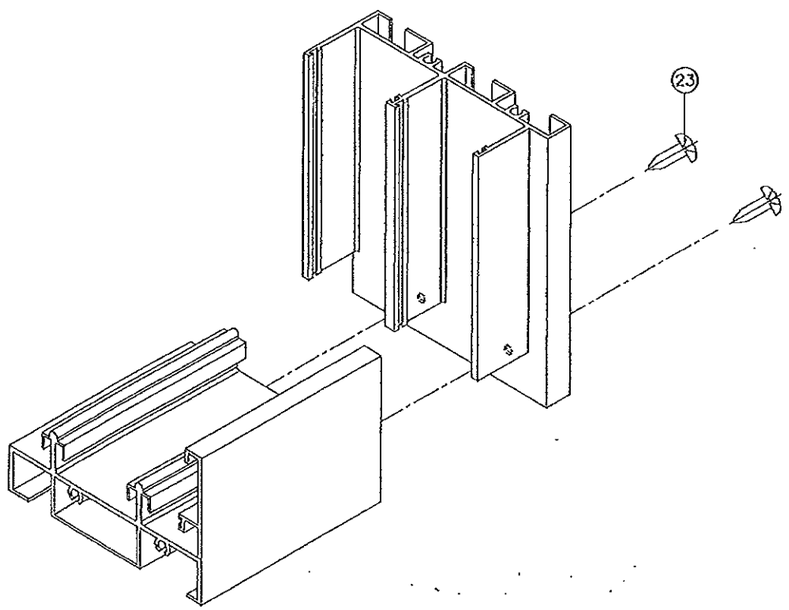


FRAME BOTTOM CORNER
STD. JAMB

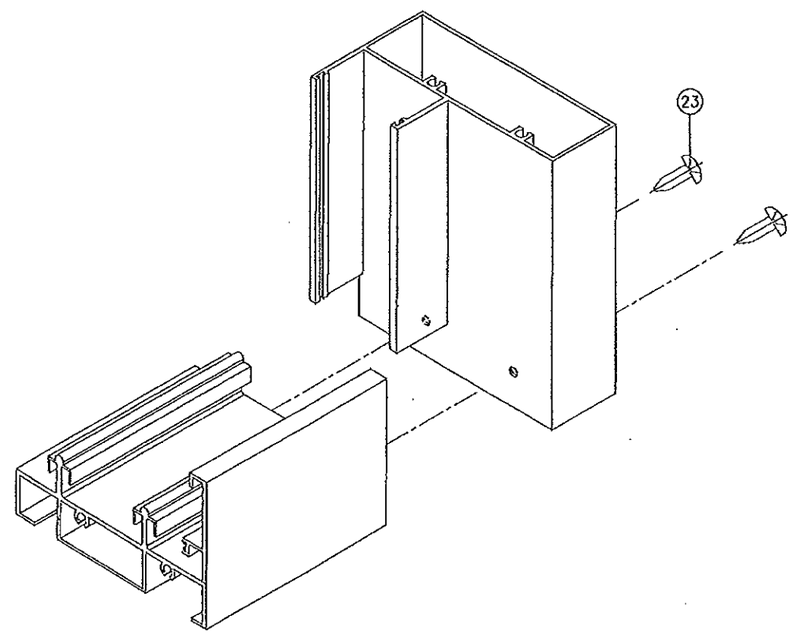


FRAME BOTTOM CORNER
FREE STANDING JAMB

PRODUCT RENEWED
as complying with the Florida Building Code
Acceptance No. 14-0515.04
Expiration Date 5/29/15
By [illegible]
Miami Dade Product Control

PRODUCT REVISED
as complying with the Florida Building Code
Acceptance No. 12-0821.17
Expiration Date MAY 29 2014
By [illegible]
Miami Dade Product Control

Engr: JAVAD AHMAD
CIVIL
FLA. PE # 70592
C.A.N. 3538

JUN 2 0 2013

**AL-FAROOQ CORPORATION**
ENGINEERS & PRODUCT DEVELOPMENT
1235 S.W. 87 AVE
MIAMI, FLORIDA 33174
TEL. (305) 264-8100 FAX. (305) 262-6978
COMP-ANL\W05-32GWL

SERIES 2005 ALUM SLIDING GLASS DOOR (S.M.I.)

GLASSWALL, LLC
3550 N.W. 49 STREET
MIAMI, FL. 33142
TEL. (305) 638-5151 FAX. (305) 638-5158

revisions:

| no. | date | by | description |
|---|---|---|---|
| A | 03.25.13 | | NO CHANGE THIS SHEET |
| B | 04.19.13 | | LAMI GLASS DETAILS REMOVED |
| C | 06.19.13 | | NO CHANGE THIS SHEET |

date: 01-03-13
scale: 1/2" = 1"
dr. by: TARIQ
chk. by:

drawing no.
W13-02

sheet 11 of 11