MIAMI-DADE COUNTY
DEPARTMENT OF REGULATORY AND ECONOMIC RESOURCES (RER)
BOARD AND CODE ADMINISTRATION DIVISION

MIAMI-DADE COUNTY
PRODUCT CONTROL SECTION
11805 SW 26 Street, Room 208
T (786) 315-2590 F (786) 315-2599
www.miamidade.gov/economy

NOTICE OF ACCEPTANCE (NOA)

Miami Wall Systems, Inc.
701 West 25 Street
Hialeah, FL 33010

SCOPE:

This NOA is being issued under the applicable rules and regulations governing the use of construction materials. The documentation submitted has been reviewed and accepted by Miami-Dade County RER - Product Control Section to be used in Miami Dade County and other areas where allowed by the Authority Having Jurisdiction (AHJ).

This NOA shall not be valid after the expiration date stated below. The Miami-Dade County Product Control Section (In Miami Dade County) and/or the AHJ (in areas other than Miami Dade County) reserve the right to have this product or material tested for quality assurance purposes. If this product or material fails to perform in the accepted manner, the manufacturer will incur the expense of such testing and the AHJ may immediately revoke, modify, or suspend the use of such product or material within their jurisdiction. RER reserves the right to revoke this acceptance, if it is determined by Miami-Dade County Product Control Section that this product or material fails to meet the requirements of the applicable building code.

This product is approved as described herein, and has been designed to comply with the Florida Building Code, including the High Velocity Hurricane Zone.

DESCRIPTION: Series "101" Aluminum Window Wall System – L.M.I.

APPROVAL DOCUMENT: Drawing No. **101–LMI**, titled "Series 101 Alum. Window Wall System (L.M.I.)", sheets 1 through 9 of 9, dated 10/15/14, prepared by manufacturer, signed and sealed by Jorge E. Valdes, P.E., bearing the Miami–Dade County Product Control Approval stamp with the Notice of Acceptance number and approval date by the Miami–Dade County Product Control Section.

MISSILE IMPACT RATING: Large and Small Missile Impact Resistant.

LABELING: Each unit shall bear a permanent label with the manufacturer's name or logo, city, state, model/series, and following statement: "Miami-Dade County Product Control Approved", unless otherwise noted herein.

RENEWAL of this NOA shall be considered after a renewal application has been filed and there has been no change in the applicable building code negatively affecting the performance of this product.

TERMINATION of this NOA will occur after the expiration date or if there has been a revision or change in the materials, use, and/or manufacture of the product or process. Misuse of this NOA as an endorsement of any product, for sales, advertising or any other purposes shall automatically terminate this NOA. Failure to comply with any section of this NOA shall be cause for termination and removal of NOA.

ADVERTISEMENT: The NOA number preceded by the words Miami-Dade County, Florida, and followed by the expiration date may be displayed in advertising literature. If any portion of the NOA is displayed, then it shall be done in its entirety.

INSPECTION: A copy of this entire NOA shall be provided to the user by the manufacturer or its distributors and shall be available for inspection at the job site at the request of the Building Official.

This NOA consists of this page 1 and evidence page E-1, as well as approval document mentioned above.

The submitted documentation was reviewed by **Manuel Perez, P.E.**

MP 11/21/15

MIAMI-DADE COUNTY APPROVED

Miami Wall Systems, Inc.

NOTICE OF ACCEPTANCE: EVIDENCE SUBMITTED

A. DRAWINGS

1. Manufacturer's die drawings and sections.
2. Drawing No **101-LMI**, Sheets 1 through 9 of 9, titled "Series 101 Alum. Window Wall System (L.M.I.)", dated 10/15/14, prepared by manufacturer, signed and sealed by Jorge E. Valdes, P.E.

B. TESTS

1. Test reports on: 1) Air Infiltration Test, per FBC, TAS 202–94
   2) Uniform Static Air Pressure Test, Loading per FBC TAS 202–94
   3) Water Resistance Test, per FBC, TAS 202–94
   4) Small Missile Impact Test per FBC, TAS 201–94
   5) Large Missile Impact Test per FBC, TAS 201–94
   6) Cyclic Wind Pressure Loading per FBC, TAS 203–94

   along with marked-up drawings and installation diagram of an aluminum window wall system, prepared by Fenestration Testing Laboratory, Inc., Test Report No. **FTL-7783**, dated 04/24/14, signed and sealed by Marlin D. Brinson, P.E.

C. CALCULATIONS

1. Anchor verification calculations and structural analysis, complying with **FBC-2010,** dated 10/15/14 and 11/12/14, prepared by manufacturer, signed and sealed by Jorge E. Valdes, P.E.
2. Glazing complies with **ASTM E1300-09.**

D. QUALITY ASSURANCE

1. Miami-Dade Department of Regulatory and Economic Resources (RER)

E. MATERIAL CERTIFICATIONS

1. Notice of Acceptance No. **11–0624.02** issued to **E.I. DuPont DeNemours & Co.**, Inc. for their "**DuPont SentryGlas® Interlayer**" dated 08/25/11, expiring on 01/14/17.
2. Notice of Acceptance No. **13–0129.27** issued to **E.I. DuPont DeNemours & Co., Inc.** for their **"DuPont Butacite® PVB Interlayer"** dated 04/11/13, expiring on 12/11/16.
3. Notice of Acceptance No. **14–0423.17** issued to **Eastman Chemical Company (MA)** for their "**Saflex Clear and Color Glass Interlayers**" dated 06/19/14, expiring on 05/21/16.

F. STATEMENTS

1. Statement letters of conformance, complying with **FBC–2010** and of no financial interest, dated October 20, 2014, prepared by manufacturer, both signed and sealed by Jorge E. Valdes, P.E.
2. Proposal No. **14–0341** issued by the Product Control Section, dated March 28, 2014, signed by Manuel Perez, P.E.

G. OTHERS

1. None.

Manuel Perez, P.E.
Product Control Examiner
NOA No. 14-0515.07
Expiration Date: December 11, 2019
Approval Date: December 11, 2014

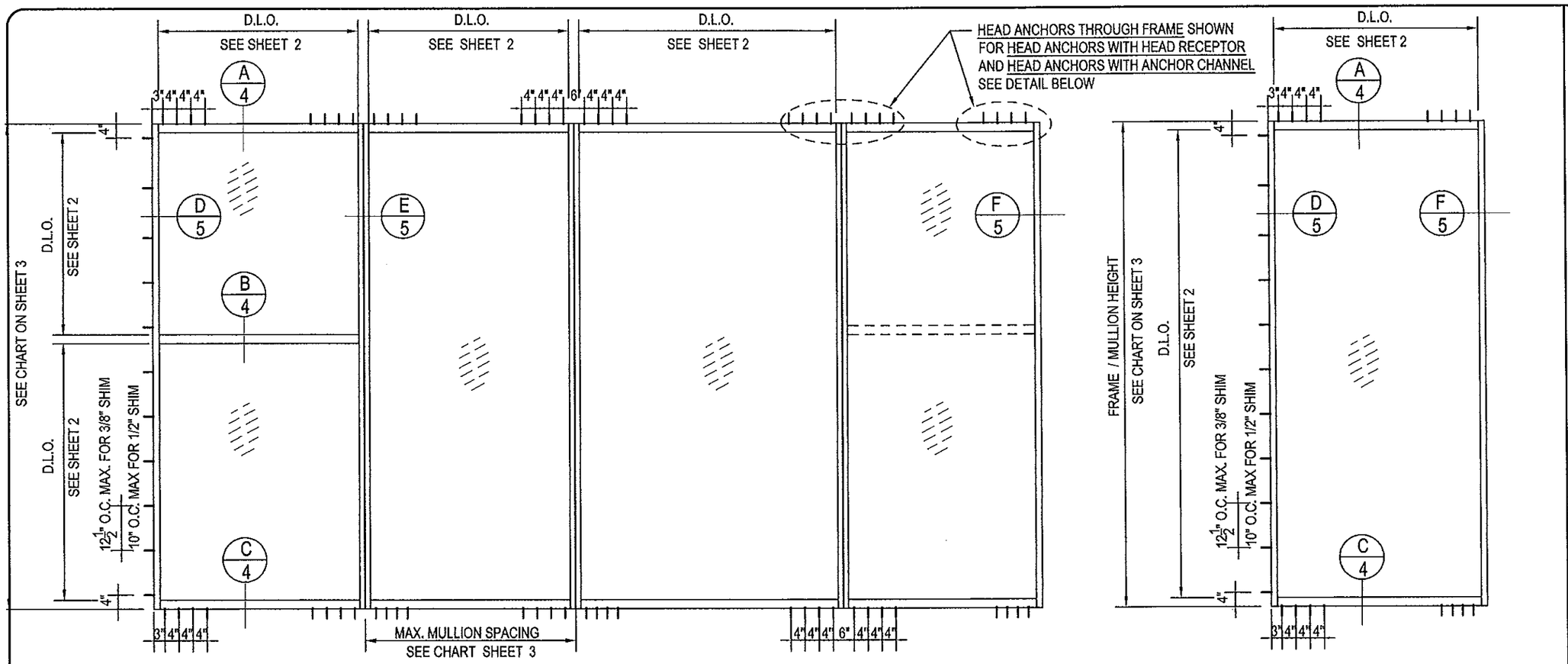

TYPICAL ELEVATIONS

SERIES 101 ALUM. WINDOW WALL SYSTEM (L.M.I.)

THIS SYSTEM MAY BE USED IN CONJUNCTION WITH MIAMI-DADE COUNTY APPR'D LARGE MISSILE IMPACT RESISTANT DOORS AND WINDOWS. FOR CONNECTION DETAILS TO MULLION SEE SEPARATE DOOR AND WINDOW NOA. LOWEST DESIGN LOAD CAPACITY OF DOOR, WINDOW OR MULLION SHALL APPLY FOR THE ENTIRE SYSTEM.

THIS PRODUCT HAS BEEN DESIGNED & TESTED IN ACCORDANCE WITH THE FLORIDA BUILDING CODE HIGH VELOCITY HURRICANE ZONE (HVHZ).

ANCHORS SHALL BE LISTED, SPACED AS SHOWN ON DETAILS, ANCHORS EMBEDMENT TO BASE MATERIAL SHALL BE BEYOND WALL DRESSING OR STUCCO.

MATERIALS INCLUDING BUT NOT LIMITED TO STEEL/METAL SCREWS, THAT COME INTO CONTACT WITH OTHER DISSIMILAR MATERIALS SHALL MEET THE REQUIREMENTS OF THE FLORIDA BLDG. CODE.

INSTRUCTIONS:

USE CHARTS AS FOLLOWS:

STEP 1: DETERMINE DESIGN WIND LOAD REQUIREMENT BASED ON WIND VELOCITY, BLDG. HEIGHT, WIND ZONE USING APPLICABLE ASCE 7 STANDARD.

STEP 2: SEE CHART ON SHEET 2 FOR DESIGN LOAD CAPACITY OF DESIRED GLASS SIZE .

STEP 3: CHECK MULLION CAPACITY FOR A GIVEN SPACING AND HEIGHT USING CHARTS ON SHEET 3. THE CAPACITY SHOULD EXCEED THE DESIGN LOAD.

STEP 4: THE LOWEST VALUE RESULTING FROM STEP 2 AND 3 SHALL APPLY TO ENTIRE SYSTEM

THIS SYSTEM IS RATED FOR LARGE AND SMALL MISSILE IMPACT . SHUTTERS ARE NOT REQUIRED.

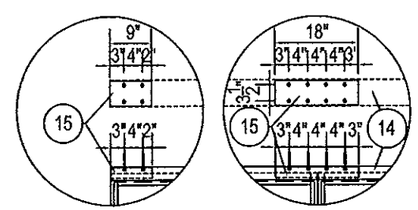

HEAD ANCHOR WITH HEAD RECEIPTOR

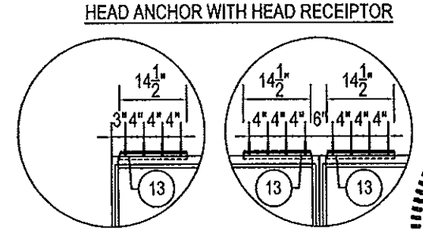

HEAD ANCHOR WITH ANCHOR CHANNEL

Approved as complying with the Florida Building Code
Date Dec. 11, 2014
NOA# 14-0515.07
Miami Dade Product Control
By Manuel Perez

Jorge E. Valdes
Fla. PE# 67398
C.A.N. 28565

JORGE E. VALDES LICENSE No 67398 STATE OF FLORIDA PROFESSIONAL ENGINEER
NOV 21 2014

Miami Wall Systems, Inc.
701 West 25th Street
Hialeah, Florida. 33010
Phone:(305) 888-2300 Fax:(305) 888-3058

SERIES 101
ALUM. WINDOW WALL SYSTEM
(L.M.I.)

NO.	DATE	REVISION

DATE: 10/15/2014
SCALE: AS NOTED
DWG. BY: O.J.L.
CHK. BY: JV
DWG NO.: 101-LMI
SHEET 1 OF 09

GLASS DESIGN LOAD CAPACITY - PSF				
D.L.O. WIDTH INCHES	D.L.O. HEIGHT INCHES	GLASS TYPE "GL-1"	GLASS TYPE "GL-2"	GLASS TYPE "GL-3"
		EXT. (+) INT.(-)	EXT. (+) INT.(-)	EXT. (+) INT.(-)
36	96	130.0	95.0	95.0
42		130.0	95.0	95.0
48		130.0	95.0	95.0
54		130.0	95.0	95.0
60		130.0	95.0	95.0
66		130.0	95.0	95.0
72		121.0	95.0	95.0
36	102	130.0	95.0	95.0
42		130.0	95.0	95.0
48		130.0	95.0	95.0
54		130.0	95.0	95.0
60		130.0	95.0	95.0
66		119.0	95.0	95.0
72		110.0	95.0	95.0
36	108	130.0	95.0	95.0
42		130.0	95.0	95.0
48		130.0	95.0	95.0
54		130.0	95.0	95.0
60		121.0	95.0	95.0
66		112.0	95.0	95.0
72		104.0	95.0	95.0
36	114	130.0	95.0	95.0
42		130.0	95.0	95.0
48		130.0	95.0	95.0
54		130.0	95.0	95.0
60		130.0	95.0	95.0
66		106.0	80.0	-
72		100.0	80.0	-
36	120	130.0	95.0	95.0
42		130.0	95.0	95.0
48		130.0	95.0	95.0
54		130.0	95.0	95.0
60		113.0	80.0	-
66		100.0	80.0	-
36	126	130.0	80.0	-
42		130.0	80.0	-
48		130.0	80.0	-
54		125.0	80.0	-
60		107.0	80.0	-
66		98.0	80.0	-
36	132	130.0	80.0	-
42		130.0	80.0	-
48		130.0	80.0	-
54		121.0	80.0	-
60		104.0	80.0	-
36	138	130.0	80.0	-
46		130.0	80.0	-
48		130.0	80.0	-
54		121.0	-	-
57		114.0	-	-

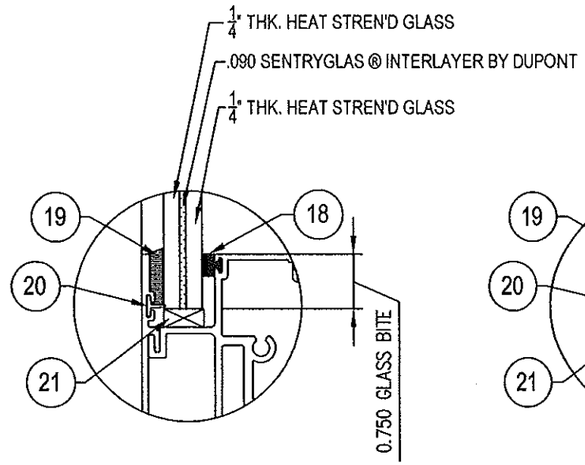

GLASS TYPE "GL-1"

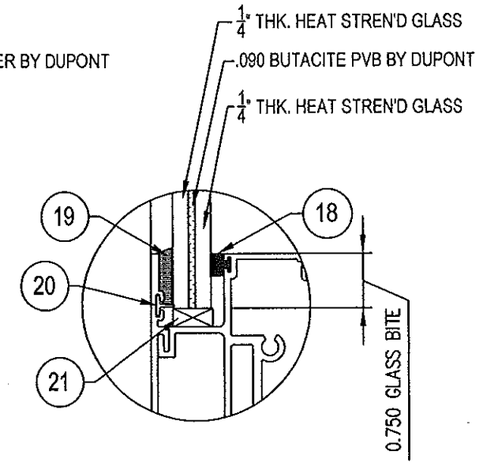

GLASS TYPE "GL-2"

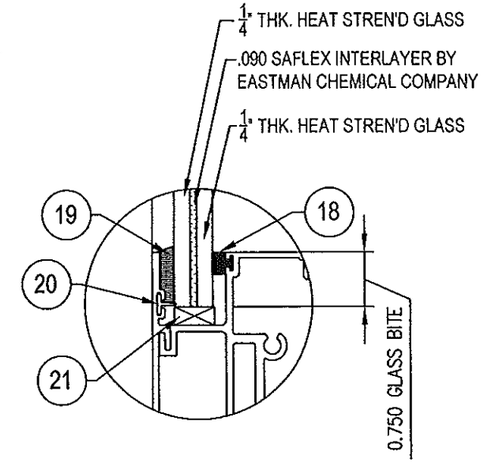

GLASS TYPE "GL-3"

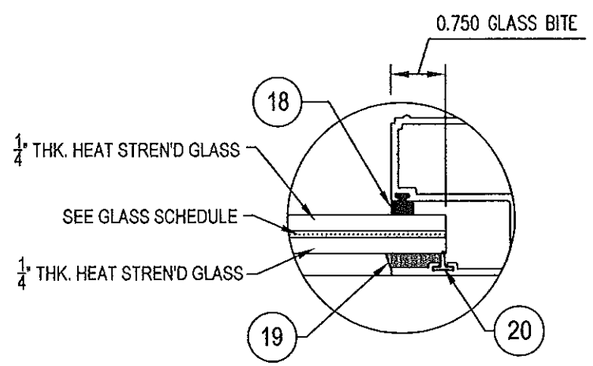

GLAZING OPTIONS

NOTE:
GLASS CAPACITIES ON THIS SHEET ARE BASED ON ASTM E1300-09 (3 SEC. GUSTS) AND FLORIDA BUILDING COMMISSION DECLARATORY STATEMENT DCA05-DEC-219

Approved as complying with the Florida Building Code
Date Dec. 11, 2014
NOA# 14-0515.07
Miami Dade Product Control
By Manuel Perez

Jorge E. Valdes
Florida PE# 67398
C.A. # 29665
JORGE E. VALDES LICENSE No. 67398 STATE OF FLORIDA PROFESSIONAL ENGINEER
NOV 21 2014

Miami Wall Systems, Inc.
701 West 25th Street
Hialeah, Florida. 33010
Phone:(305) 888-2300 Fax:(305) 888-3058

SERIES 101
ALUM. WINDOW WALL SYSTEM
(L.M.I.)

REVISION	NO.	DATE

DATE: 10/21/2014
SCALE: AS NOTED
DWG. BY: O.J.L.
CHK. BY: JV
DWG NO.: 101-LMI
SHEET 2 OF 9

CHART "A"

MULLION DESIGN LOAD CAPACITY - PSF

NOMINAL DIMENSIONS (INCHES)		MULLION TYPE				ANCHOR TYPE	
		"M1"	"M2"	"M3"	"M4"	"A", "B"	"A1", "B1"
WIDTH (W)	FRAME HEIGHT	EXT. (+) INT(-)	EXT. (+) INT(-)	EXT. (+) INT(-)	EXT. (+) INT(-)	EXT. (+) INT(-)	EXT. (+) INT(-)
30	72	95.0	95.0	110.0	130.0	130.0	130.0
36		95.0	95.0	110.0	130.0	130.0	130.0
42		95.0	95.0	110.0	130.0	130.0	130.0
48		95.0	95.0	110.0	130.0	130.0	130.0
54		95.0	95.0	110.0	130.0	130.0	130.0
60		95.0	95.0	110.0	130.0	120.0	130.0
66		95.0	95.0	110.0	130.0	109.1	130.0
72		95.0	95.0	110.0	130.0	100.0	130.0
30	84	95.0	95.0	110.0	130.0	130.0	130.0
36		95.0	95.0	110.0	130.0	130.0	130.0
42		95.0	95.0	110.0	130.0	130.0	130.0
48		95.0	95.0	110.0	130.0	128.6	130.0
54		95.0	95.0	110.0	130.0	114.3	130.0
60		95.0	95.0	110.0	130.0	102.9	130.0
66		-	95.0	110.0	130.0	93.5	130.0
30	96	95.0	95.0	110.0	130.0	130.0	130.0
36		95.0	95.0	110.0	130.0	130.0	130.0
42		95.0	95.0	110.0	130.0	128.6	130.0
48		95.0	95.0	110.0	130.0	112.5	130.0
54		95.0	95.0	110.0	130.0	100.0	130.0
60		-	95.0	110.0	130.0	90.0	130.0
30	102	95.0	95.0	110.0	130.0	130.0	130.0
36		95.0	95.0	110.0	130.0	130.0	130.0
42		95.0	95.0	110.0	130.0	121.0	130.0
48		95.0	95.0	110.0	130.0	105.9	130.0
54		-	95.0	110.0	130.0	94.1	130.0
60		-	95.0	110.0	130.0	84.7	130.0
30	114	-	95.0	110.0	130.0	130.0	130.0
36		-	95.0	110.0	130.0	130.0	130.0
42		-	95.0	110.0	130.0	121.0	130.0
48		-	95.0	110.0	130.0	105.9	130.0
54		-	95.0	110.0	130.0	94.1	130.0
60		-	95.0	110.0	130.0	84.7	130.0
30	122	-	95.0	110.0	130.0	130.0	130.0
36		-	95.0	110.0	130.0	130.0	130.0
42		-	95.0	110.0	130.0	121.0	130.0
48		-	95.0	110.0	130.0	105.9	130.0

CHART "B"

MULLION DESIGN LOAD CAPACITY - PSF

NOMINAL DIMENSIONS (INCHES)		MULLION TYPE		ANCHOR TYPE	
		"M5"	"M6"	"A", "B"	"A1", "B1"
WIDTH (W)	FRAME HEIGHT	EXT. (+) INT(-)	EXT. (+) INT(-)	EXT. (+) INT(-)	EXT. (+) INT(-)
30	120	80.0	130.0	130.0	130.0
36		80.0	130.0	120.0	130.0
42		80.0	130.0	102.9	130.0
48		80.0	130.0	90.0	130.0
54		80.0	130.0	80.0	130.0
60		-	130.0	72.0	130.0
66		-	130.0	65.5	119.9
72		-	130.0	60.0	109.9
30	126	80.0	130.0	130.0	130.0
36		80.0	130.0	114.3	130.0
42		80.0	130.0	98.0	130.0
48		80.0	130.0	85.7	130.0
54		80.0	130.0	76.2	130.0
60		-	130.0	68.6	125.6
66		-	130.0	62.3	114.1
30	132	80.0	130.0	130.0	130.0
36		80.0	130.0	109.1	130.0
42		80.0	130.0	93.5	130.0
48		80.0	130.0	81.8	130.0
54		80.0	130.0	72.7	130.0
60		-	130.0	65.5	119.9
30	138	80.0	130.0	125.2	130.0
36		80.0	130.0	104.3	130.0
42		80.0	130.0	89.4	130.0
48		80.0	130.0	78.3	130.0
54		-	130.0	69.6	127.4
60		-	130.0	62.6	114.6
30	144	80.0	130.0	120.0	130.0
36		80.0	130.0	100.0	130.0
42		80.0	130.0	85.7	130.0
48		80.0	130.0	75.0	130.0
54		-	130.0	66.7	122.1
60		-	130.0	60.0	109.9

CHART "C"

MULLION DESIGN LOAD CAPACITY - PSF

NOMINAL DIMENSIONS (INCHES)		MULLION TYPE	ANCHOR TYPE
		"M7"	"A1", "B1"
WIDTH (W)	FRAME HEIGHT	EXT. (+) INT(-)	EXT. (+) INT(-)
30	150	95.0	95.0
36		95.0	95.0
42		95.0	95.0
48		95.0	95.0
54		95.0	95.0
60		95.0	95.0
66		95.0	95.0
68		95.0	93.1
30	156	95.0	95.0
36		95.0	95.0
42		95.0	95.0
48		95.0	95.0
54		95.0	95.0
60		95.0	95.0
66		95.0	92.2
68		95.0	89.5
30	162	95.0	95.0
36		95.0	95.0
42		95.0	95.0
48		95.0	95.0
54		95.0	95.0
60		95.0	95.0
66		95.0	88.8
68		95.0	86.2
30	168	95.0	95.0
36		95.0	95.0
42		95.0	95.0
48		95.0	95.0
54		95.0	95.0
60		95.0	94.2
66		95.0	85.6
68		95.0	83.1

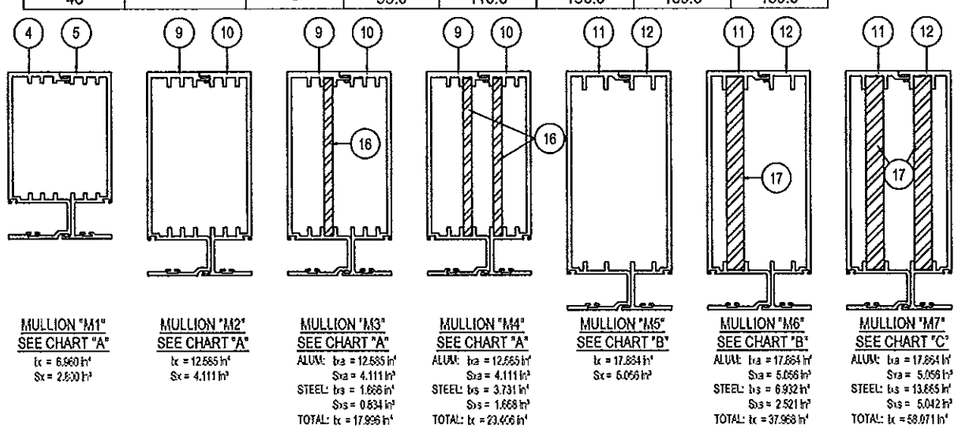

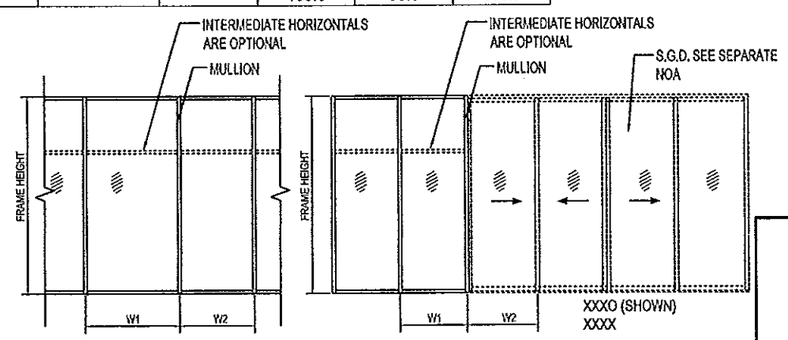

$$\text{WIDTH (W)} = \frac{W1 + W2}{2}$$

Approved as complying with the Florida Building Code
Date Dec. 11, 2014
NOA# 14-0515.07
Miami Dade Product Control
By Manuel Diaz

Jorge E. Valdes
Fla. Reg. No. 67398
JORGE E. VALDES
LICENSE No. 67398
STATE OF FLORIDA
PROFESSIONAL ENGINEER
NOV 21 2014

Miami Wall Systems, Inc.
701 West 25th Street
Hialeah, Florida. 33010
Phone:(305) 888-2300 Fax:(305) 888-3058

SERIES 101
ALUM. WINDOW WALL SYSTEM
(L.M.I.)

REVISION	NO.	DATE

DATE: 10/15/2014
SCALE: AS NOTED
DWG. BY: O.J.L.
CHK. BY: JV
DWG NO.: 101-LMI
SHEET 3 OF 09

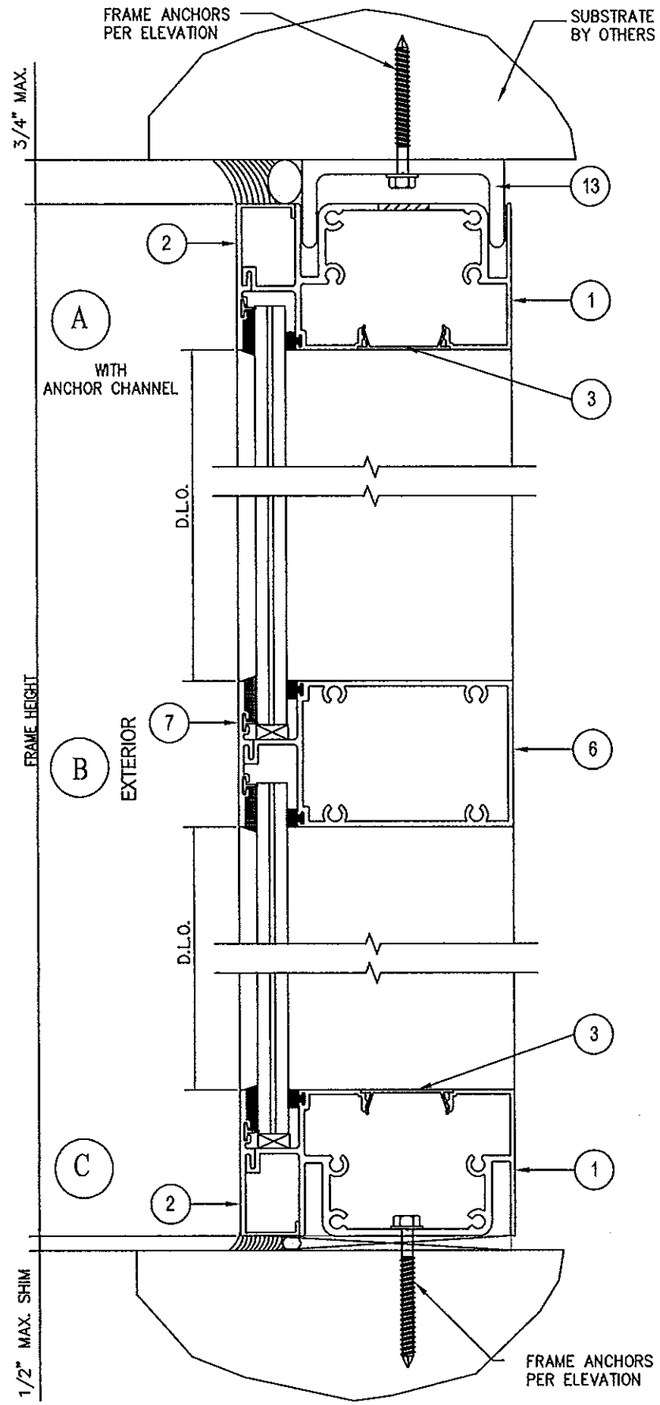

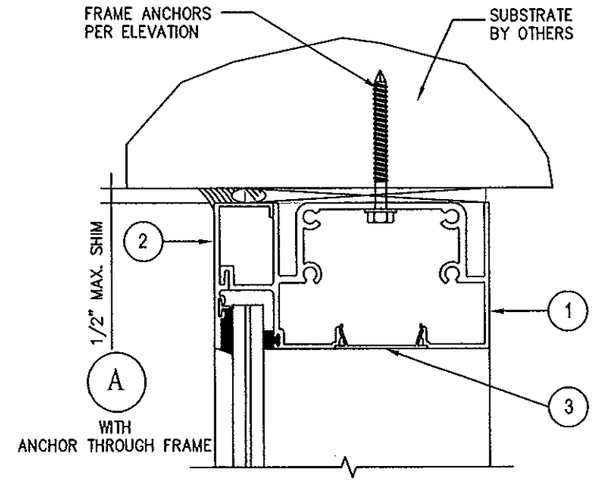

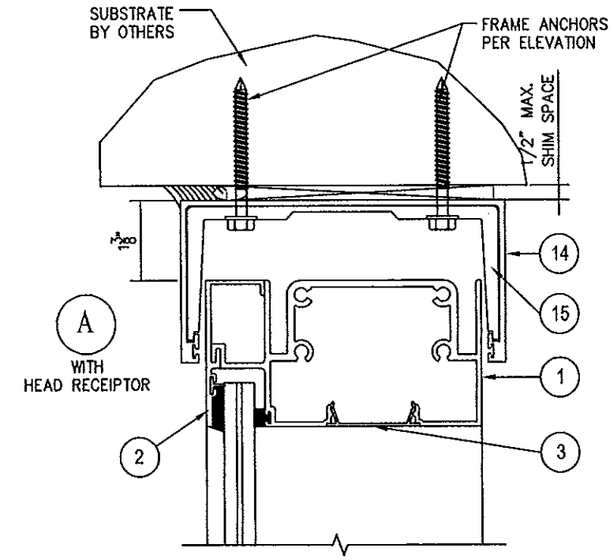

TYPICAL ANCHORS: SEE ELEV. FOR SPACING

AT HEAD & SILL

TYPE. "A": 1/4" DIA. ULTRACON BY "ELCO" (Fu=177 KSI, Fy=155 KSI)
DIRECTLY INTO CONCRETE WITH 1-3/4" MIN. EMBED, fc'=3000 psi
TYPE. "A1": 5/16" DIA. ULTRACON BY "ELCO" (Fu=177 KSI, Fy=155 KSI)
DIRECTLY INTO CONCRETE WITH 2" MIN. EMBED, fc'=3515 psi

TYPE. "B": 1/4" DIA. DRILL FLEX OR SELF DRILLING SCREWS (Fu=92 KSI, Fy=120 KSI)
TYPE. "B1": 5/16" DIA. DRILL FLEX OR SELF DRILLING SCREWS (Fu=92 KSI, Fy=120 KSI)
INTO METAL STRUCTURES OR APPROVED MULLIONS
STEEL: 1/8" THICK MIN. (Fy = 36 KSI MIN.)
ALUMINUM: 1/8" THICK MIN. (6063-T5 MIN.)
(STEEL IN CONTACT WITH ALUMINUM TO BE PLATED OR PAINTED)

AT JAMBS

1/4" DIA. ULTRACON BY "ELCO" (Fu=177 KSI, Fy=155 KSI)
THRU 1BY BUCKS, 1-3/4" MIN. CONC. OR MASONRY EMBEDMENT
DIRECTLY INTO CONCRETE OR MASONRY WITH 1-3/4" MIN. EMBED

1/4" DIA. DRILL FLEX OR SELF DRILLING SCREWS (Fu=92 KSI, Fy=120 KSI)
INTO METAL STRUCTURES OR APPROVED MULLIONS
STEEL: 1/8" THICK MIN. (Fy = 36 KSI MIN.)
ALUMINUM: 1/8" THICK MIN. (6063-T5 MIN.)
(STEEL IN CONTACT WITH ALUMINUM TO BE PLATED OR PAINTED)

TYPICAL EDGE DISTANCE:
INTO CONCRETE = 2-1/2" MIN. FOR 1/4" DIA. ANCHORS
= 3-1/8" MIN. FOR 5/16" DIA. ANCHORS
INTO METAL STRUCTURE = 3/4" MIN.

CONCRETE AT HEAD, SILL OR JAMBS fc' = 3000 PSI MIN.
C-90 HOLLOW/FILLED BLOCK AT JAMBS fm' = 2000 PSI MIN.

Approved as complying with the Florida Building Code
Date Dec. 11, 2014
NOA# 14-0515.07
Miami Dade Product Control
By Manuel Perez

Jorge E. Valdes
Fla. PE# 67398
C.A.No. 28565

JORGE E. VALDES
LICENSE
No. 67398
NOV 21 2014
STATE OF FLORIDA
PROFESSIONAL ENGINEER

Miami Wall Systems, Inc.
701 West 25th Street
Hialeah, Florida. 33010
Phone:(305) 888-2300 Fax:(305) 888-3058

SERIES 101
ALUM. WINDOW WALL SYSTEM
(L.M.I.)

NO.	DATE	REVISION

DATE: 10/15/2014
SCALE: AS NOTED
DWG. BY: O.J.L.
CHK. BY: JV
DWG NO.: 101-LMI
SHEET 4 OF 09

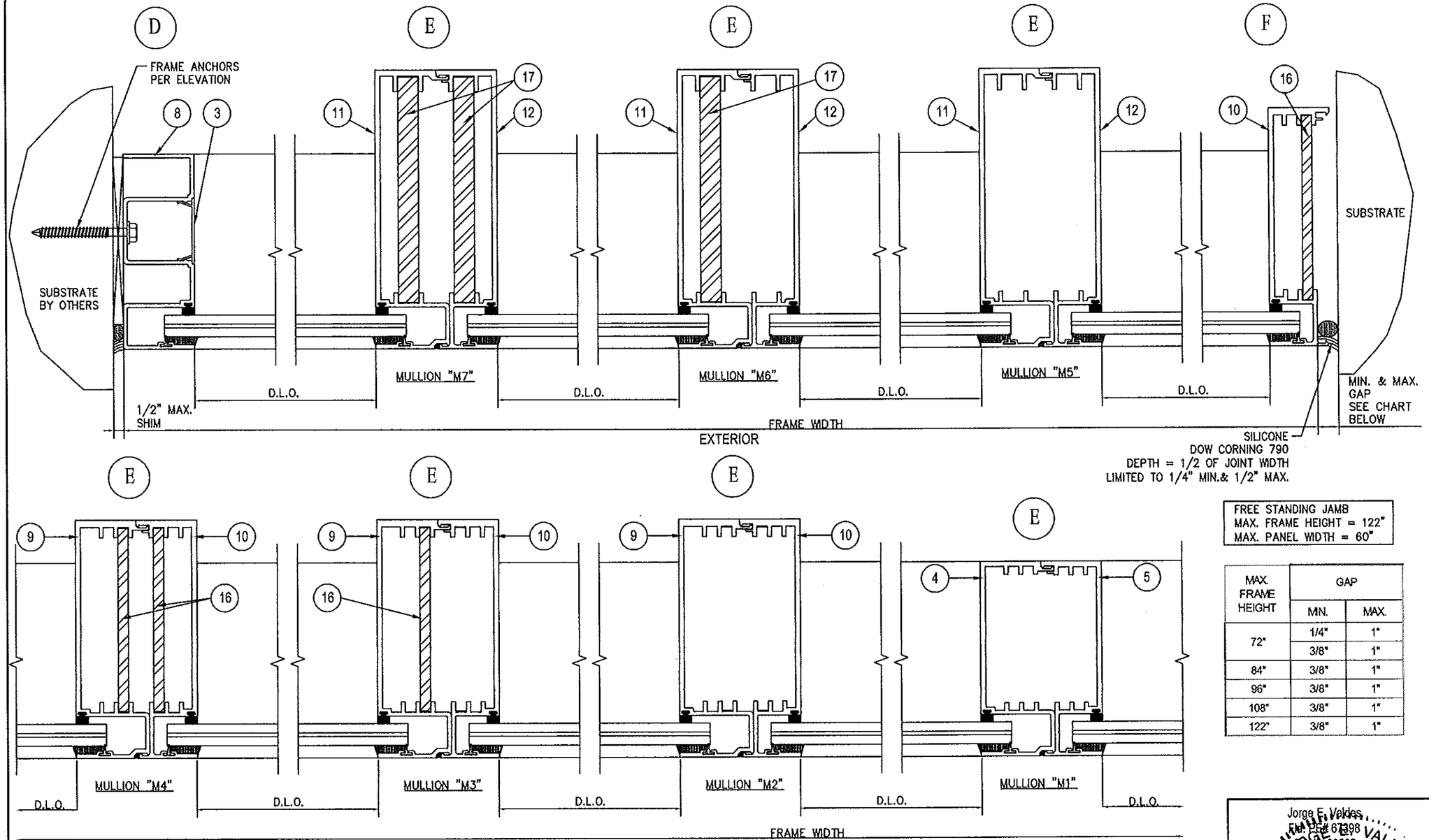

FREE STANDING JAMB
MAX. FRAME HEIGHT = 122"
MAX. PANEL WIDTH = 60"

MAX. FRAME HEIGHT	GAP	
	MIN.	MAX.
72"	1/4"	1"
	3/8"	1"
84"	3/8"	1"
96"	3/8"	1"
108"	3/8"	1"
122"	3/8"	1"

FOR MULLION PROPERTIES AND DESIGN LOAD CAPACITY TABLES, SEE SHEET 3 OF 9

Approved as complying with the Florida Building Code
Date Dec. 11, 2014
NOA# 14-0515.07
Miami Dade Product Control
By Manuel Perez

Jorge E. Valdes
Fla. PE# 67398
P.A.N. 28565

JORGE E. VALDES
LICENSE
No. 67398
NOV 21 2014
STATE OF FLORIDA
PROFESSIONAL ENGINEER

Miami Wall Systems, Inc.
701 West 25th Street
Hialeah, Florida. 33010
Phone:(305) 888-2300 Fax:(305) 888-3058

SERIES 101
ALUM. WINDOW WALL SYSTEM
(L.M.I.)

NO.	DATE	REVISION

DATE: 10/15/2014
SCALE: AS NOTED
DWG. BY: O.J.L.
CHK. BY: JV
DWG NO.: 101-LMI
SHEET 5 OF 09

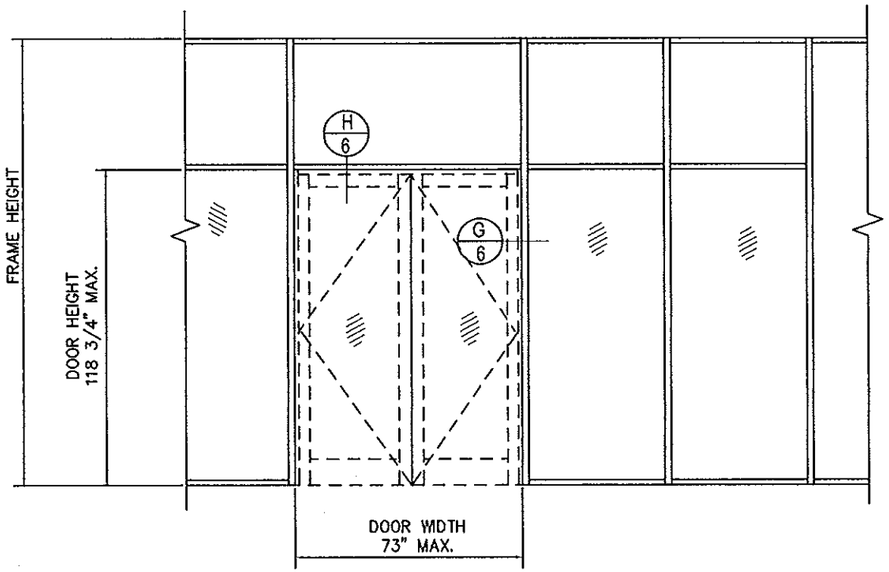

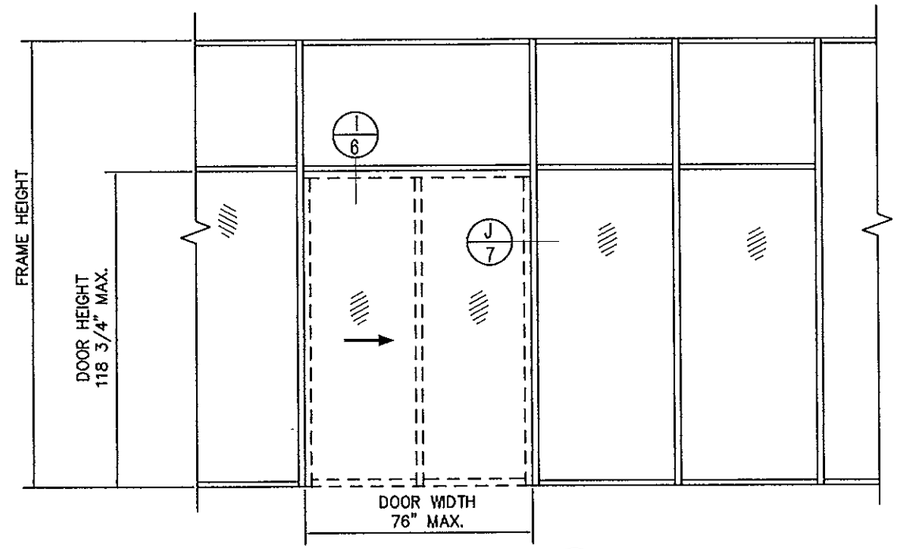

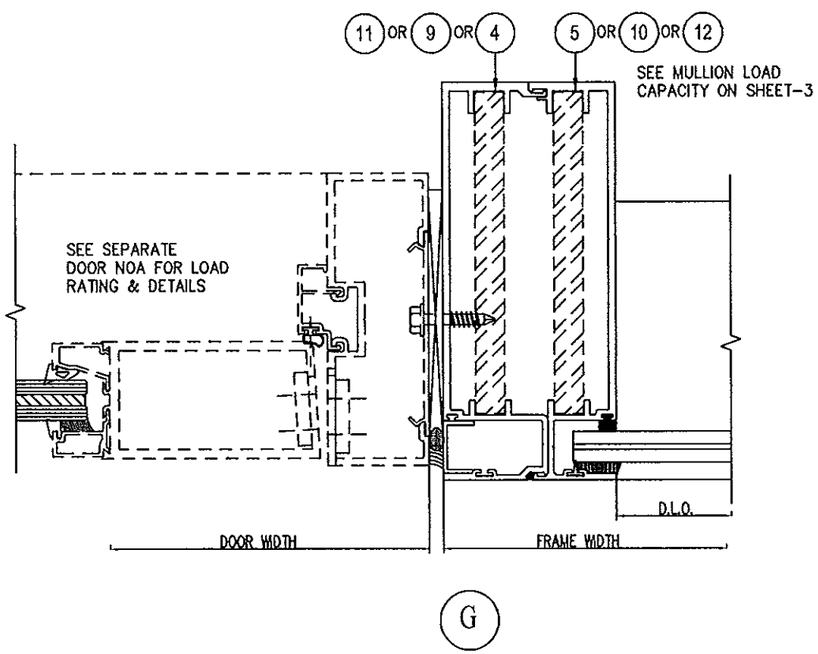

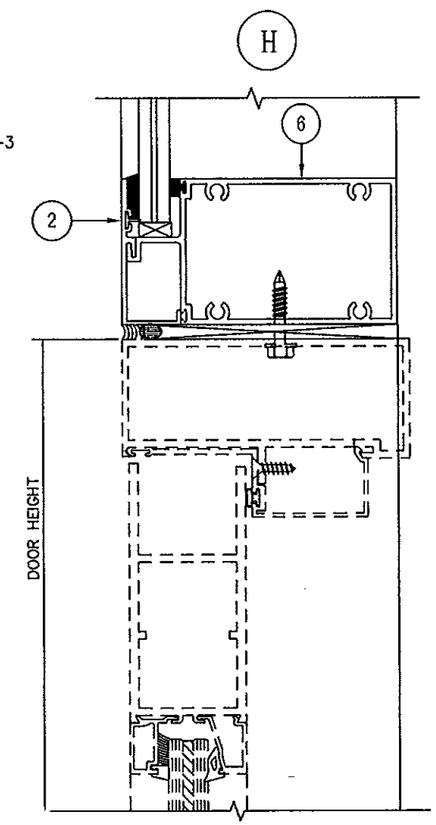

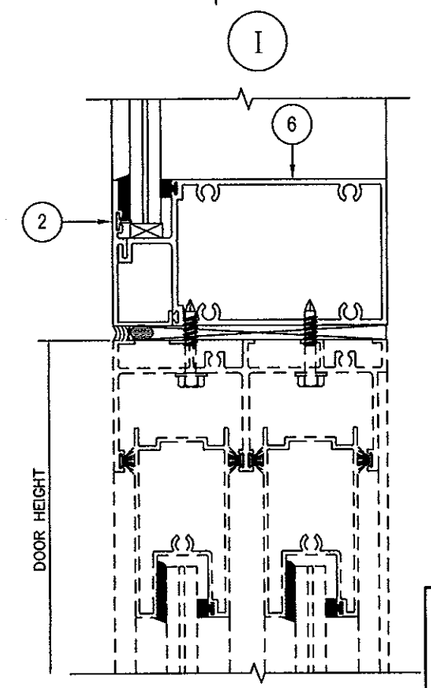

Approved as complying with the
Florida Building Code
Date Dec. 11, 2014
NOA# 14-0515.07
Miami Dade Product Control
By Manuel Perez

Jorge E. Valdes
Fla. PE# 67398
CE.NE285554

JORGE E. VALDES
LICENSE
No 67398
NOV 21 2014
STATE OF
FLORIDA
PROFESSIONAL ENGINEER

Miami Wall Systems, Inc.
701 West 25th Street
Hialeah, Florida. 33010
Phone:(305) 888-2300 Fax:(305) 888-3058

SERIES 101
ALUM. WINDOW WALL SYSTEM
(L.M.I.)

NO.	DATE	REVISION

DATE: 10/15/2014
SCALE: AS NOTED
DWG. BY: O.J.L.
CHK. BY: JV
DWG NO.: 101-LMI
SHEET 6 OF 09

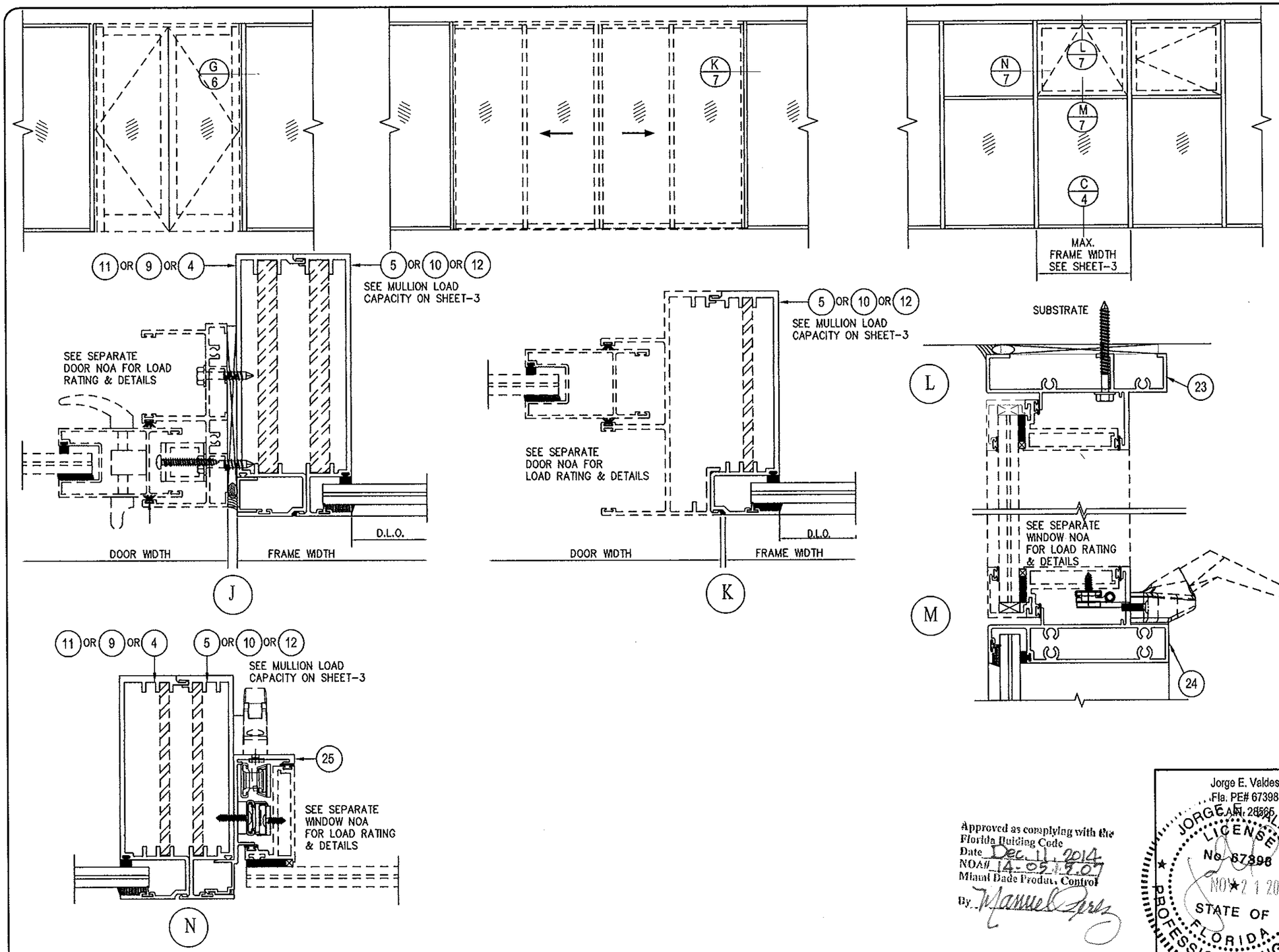

Approved as complying with the Florida Building Code
Date Dec. 11, 2014
NOA# 14-0512.07
Miami Dade Product Control
By Manuel Perez

Jorge E. Valdes
Fla. PE# 67398
CA# 28565

JORGE E. VALDES
LICENSE
No. 67398
NOV 21 2014
STATE OF FLORIDA
PROFESSIONAL ENGINEER

Miami Wall Systems, Inc.
701 West 25th Street
Hialeah, Florida. 33010
Phone:(305) 888-2300 Fax:(305) 888-3058

SERIES 101
ALUM. WINDOW WALL SYSTEM
(L.M.I.)

NO.	DATE	REVISION

DATE: 10/15/2014
SCALE: AS NOTED
DWG. BY: O.J.L.
CHK. BY: JV
DWG NO.: 101-LMI
SHEET 7 OF 09

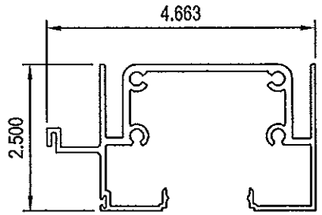

1 HEAD / SILL FRAME
101-401
TYP. WALL THK = 0.078"
MAT: ALUM. ALLOY 6063-T6

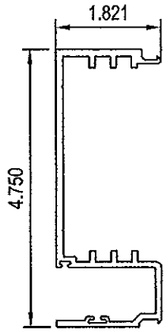

4 MALE VERTICAL MULLION
101-404
TYP. WALL THK = 0.125"
MAT: ALUM. ALLOY 6063-T6

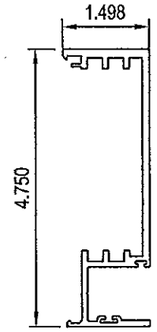

5 FEMALE VERTICAL MULLION
101-405
TYP. WALL THK = 0.125"
MAT: ALUM. ALLOY 6063-T6

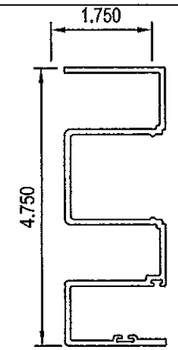

8 JAMB FRAME
101-408
TYP. WALL THK = 0.100"
MAT: ALUM. ALLOY 6063-T6

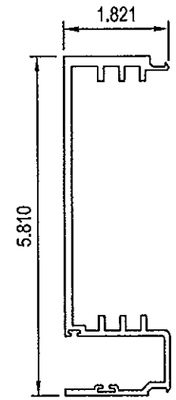

9 MEDIUM
MALE VERTICAL MULLION
101-409
TYP. WALL THK = 0.125"
MAT: ALUM. ALLOY 6063-T6

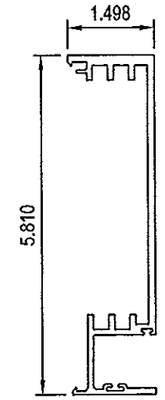

10 MEDIUM
FEMALE VERTICAL MULLION
101-410
TYP. WALL THK = 0.125"
MAT: ALUM. ALLOY 6063-T6

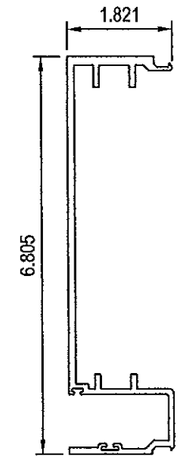

11 HEAVY
MALE VERTICAL MULLION
101-411
TYP. WALL THK = 0.125"
MAT: ALUM. ALLOY 6063-T6

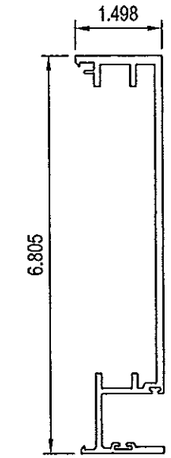

12 HEAVY
FEMALE VERTICAL MULLION
101-412
TYP. WALL THK = 0.125"
MAT: ALUM. ALLOY 6063-T6

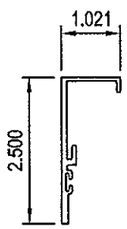

2 FRAME GLAZING BEAD
101-402
TYP. WALL THK = 0.110"
MAT: ALUM. ALLOY 6063-T6

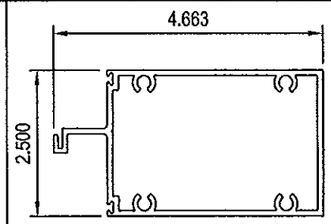

6 HORIZONTAL MEETING RAIL
101-406
TYP. WALL THK = 0.078"
MAT: ALUM. ALLOY 6063-T6

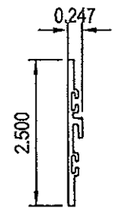

7 GLAZING BEAD
AT MEETING RAIL
101-407
TYP. WALL THK = 0.110"
MAT: ALUM. ALLOY 6063-T6

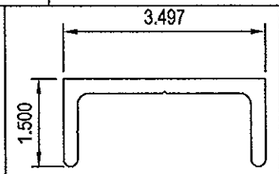

13 CHANNEL
101-413
TYP. WALL THK = 0.250"
MAT: ALUM. ALLOY 6005A-T61

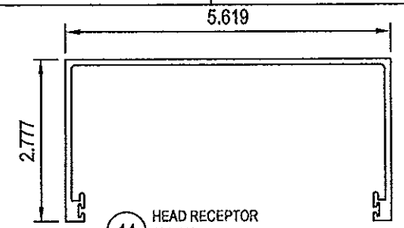

14 HEAD RECEPTOR
101-423
TYP. WALL THK = 0.090"
MAT: ALUM. ALLOY 6063-T6

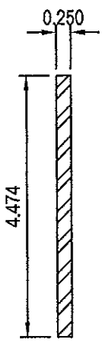

16 REINFORCEMENT BAR
MAT: STEEL A36

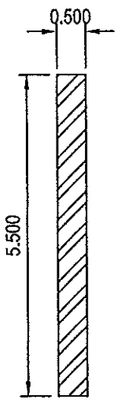

17 REINFORCEMENT BAR
MAT: STEEL A36

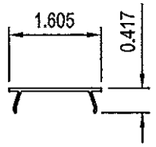

3 FASTENER COVER
101-403
TYP. WALL THK = 0.050"
MAT: ALUM. ALLOY 6063-T6

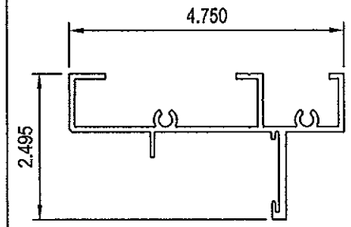

23 ZERO SL FRAME
2061-001
TYP. WALL THK = 0.093"
MAT: ALUM. ALLOY 6063-T6

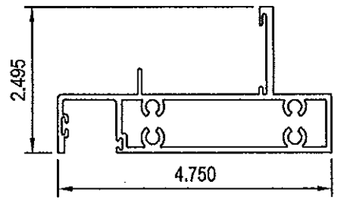

24 ZERO SL MEETING RAIL
2061-002
TYP. WALL THK = 0.093"
MAT: ALUM. ALLOY 6063-T6

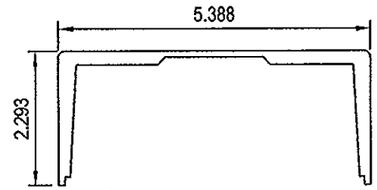

15 HEAD RECEPTOR REINFORCEMENT
101-424
TYP. WALL THK = 0.229"
MAT: ALUM. ALLOY 6005A-T61

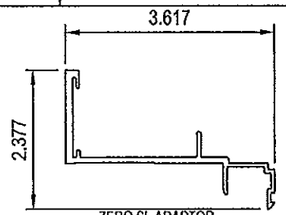

25 ZERO SL ADAPTOR
2061-005
TYP. WALL THK = 0.100"
MAT: ALUM. ALLOY 6063-T6

Approved as complying with the
Florida Building Code
Date Dec. 11 2014
NOA# 14-0515.07
Miami Dade Product Control
By Manuel Perez

Jorge E. Valdes
Fla. PE# 67398
C.A.N. 28565

JORGE E. VALDES
LICENSE
No 67398
NOV 21 2014
STATE OF
FLORIDA
PROFESSIONAL ENGINEER

Miami Wall Systems, Inc.
701 West 25th Street
Hialeah, Florida. 33010
Phone:(305) 888-2300 Fax:(305) 888-3058

SERIES 101
ALUM. WINDOW WALL SYSTEM
(L.M.I.)

REVISION		
NO.	DATE	

DATE: 10/15/2014
SCALE: AS NOTED
DWG. BY: O.J.L.
CHK. BY: JV
DWG NO.: 101-LMI
SHEET 8 OF 09

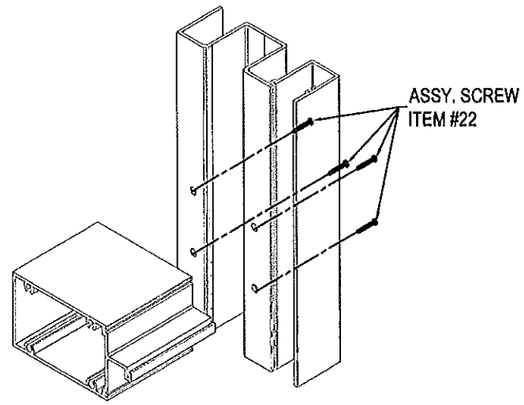

MEETING RAIL ASSEMBLY DETAIL

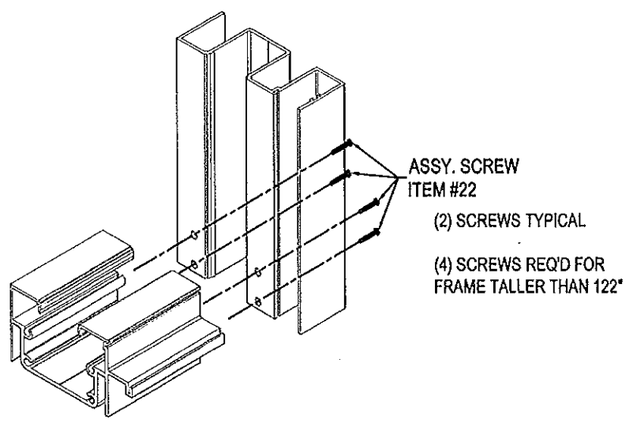

FRAME CORNER ASSEMBLY DETAIL

ITEM #	PART #	DESCRIPTION	REMARKS
1	101-401	SILL / HEAD FRAME	FRAME
2	101-402	FRAME GALZING BEAD	FRAME
3	101-403	FASTENER COVER	FRAME
4	101-404	MALE VERTICAL MULLION	
5	101-405	FEMALE VERTICAL MULLION	
6	101-406	HORIZONTAL MEETING RAIL	FRAME
7	101-407	GLAZING BEAD FOR MEETING RAIL	FRAME
8	101-408	JAMB FRAME	FRAME
9	101-409	MEDIUM MALE VERTICAL MULLION	FRAME
10	101-410	MEDIUM FEMALE VERTICAL MULLION	FRAME
11	101-411	HEAVY MALE VERTICAL MULLION	FRAME
12	101-412	HEAVY FEMALE VERTICAL MULLION	FRAME
13	101-413	CHANNEL (MILL)	AT HEAD FRAME, SEE ELEV. FOR LOCATIONS
14	101-423	HEAD RECEIPTOR	AT HEAD FRAME
15	101-424	HEAD RECEIPTOR REINFORCEMENT	
16		1/2" X 4 1/2" REINFORCEMENT BAR	
17		1/2" X 5 1/2" REINFORCEMENT BAR	
18	G-101-01	SPACER	FOR 9/16" LAMINATED GLASS
19	SILICONE	TREMCO PROGLAZE	AT PANELS 9/16" GLASS
20	G-101-02	BACKER FLAP	SEE GLAZING DETAILS
21		1/4" X 1/2" X 4" LG SETTING BLOCK	
22		#14" X 1 1/2" HEX HEAD SMS	
23	2061-001	ZERO SL FRAME	
24	2061-002	ZERO SL MEETING RAIL	
25	2061-005	ZERO SL ADAPTOR	

Approved as complying with the
Florida Building Code
Date Dec. 11, 2014
NOA# 14-0515.07
Miami Dade Product Control
By Manuel Perez

Jorge E. Valdes
Fla. PE# 67398
CA# 28555

JORGE E. VALDES
LICENSE
No 67398
NOV 21 2014
STATE OF FLORIDA
PROFESSIONAL ENGINEER

Miami Wall Systems, Inc.
701 West 25th Street
Hialeah, Florida. 33010
Phone:(305) 888-2300 Fax:(305) 888-3058

SERIES 101
ALUM. WINDOW WALL SYSTEM
(L.M.I.)

NO.	DATE	REVISION

DATE: 10/15/2014
SCALE: AS NOTED
DWG. BY: O.J.L.
CHK. BY: JV
DWG NO.: 101-LMI
SHEET 9 OF 09