MIAMI-DADE COUNTY
DEPARTMENT OF REGULATORY AND ECONOMIC RESOURCES (RER)
BOARD AND CODE ADMINISTRATION DIVISION

MIAMI-DADE COUNTY
PRODUCT CONTROL SECTION
11805 SW 26 Street, Room 208
T (786) 315-2590 F (786) 315-2599
www.miamidade.gov/economy

# NOTICE OF ACCEPTANCE (NOA)

**Miami Wall Systems, Inc.**
**701 West 25 Street**
**Hialeah, FL 33010**

**SCOPE:**

This NOA is being issued under the applicable rules and regulations governing the use of construction materials. The documentation submitted has been reviewed and accepted by Miami-Dade County RER - Product Control Section to be used in Miami Dade County and other areas where allowed by the Authority Having Jurisdiction (AHJ).

This NOA shall not be valid after the expiration date stated below. The Miami-Dade County Product Control Section (In Miami Dade County) and/or the AHJ (in areas other than Miami Dade County) reserve the right to have this product or material tested for quality assurance purposes. If this product or material fails to perform in the accepted manner, the manufacturer will incur the expense of such testing and the AHJ may immediately revoke, modify, or suspend the use of such product or material within their jurisdiction. RER reserves the right to revoke this acceptance, if it is determined by Miami-Dade County Product Control Section that this product or material fails to meet the requirements of the applicable building code.

This product is approved as described herein, and has been designed to comply with the Florida Building Code, including the High Velocity Hurricane Zone.

**DESCRIPTION: Series "101" Aluminum Window Wall System – S.M.I.**

**APPROVAL DOCUMENT:** Drawing No. **101–SMI**, titled "Series 101 Alum. Window Wall System (S.M.I.)", sheets 1 through 9 of 9, dated 10/21/14, prepared by manufacturer, signed and sealed by Jorge E. Valdes, P.E., bearing the Miami–Dade County Product Control Approval stamp with the Notice of Acceptance number and approval date by the Miami–Dade County Product Control Section.

**MISSILE IMPACT RATING: Small Missile Impact Resistant.**

**LABELING:** Each unit shall bear a permanent label with the manufacturer's name or logo, city, state, model/series, and following statement: "Miami-Dade County Product Control Approved", unless otherwise noted herein.

**RENEWAL** of this NOA shall be considered after a renewal application has been filed and there has been no change in the applicable building code negatively affecting the performance of this product.

**TERMINATION** of this NOA will occur after the expiration date or if there has been a revision or change in the materials, use, and/or manufacture of the product or process. Misuse of this NOA as an endorsement of any product, for sales, advertising or any other purposes shall automatically terminate this NOA. Failure to comply with any section of this NOA shall be cause for termination and removal of NOA.

**ADVERTISEMENT:** The NOA number preceded by the words Miami-Dade County, Florida, and followed by the expiration date may be displayed in advertising literature. If any portion of the NOA is displayed, then it shall be done in its entirety.

**INSPECTION:** A copy of this entire NOA shall be provided to the user by the manufacturer or its distributors and shall be available for inspection at the job site at the request of the Building Official.

This NOA consists of this page 1 and evidence page E-1, as well as approval document mentioned above.

The submitted documentation was reviewed by **Manuel Perez, P.E.**

MIAMI-DADE COUNTY APPROVED

1/21/15

Miami Wall Systems, Inc.

## NOTICE OF ACCEPTANCE: EVIDENCE SUBMITTED

**A. DRAWINGS**

1. Manufacturer's die drawings and sections.
2. Drawing No **101-SMI**, Sheets 1 through 9 of 9, titled "Series 101 Alum. Window Wall System (S.M.I.)", dated 10/21/14, prepared by manufacturer, signed and sealed by Jorge E. Valdes, P.E.

**B. TESTS**

1. Test reports on: 1) Air Infiltration Test, per FBC, TAS 202–94
   2) Uniform Static Air Pressure Test, Loading per FBC TAS 202–94
   3) Water Resistance Test, per FBC, TAS 202–94
   4) Small Missile Impact Test per FBC, TAS 201–94
   5) Large Missile Impact Test per FBC, TAS 201–94
   6) Cyclic Wind Pressure Loading per FBC, TAS 203–94

   along with marked-up drawings and installation diagram of an aluminum window wall system, prepared by Fenestration Testing Laboratory, Inc., Test Report No. **FTL-7783**, dated 04/24/14, signed and sealed by Marlin D. Brinson, P.E.

**C. CALCULATIONS**

1. Anchor verification calculations and structural analysis, complying with **FBC-2010,** dated 10/21/14 and 11/12/14, prepared by manufacturer, signed and sealed by Jorge E. Valdes, P.E.
2. Glazing complies with **ASTM E1300-09.**

**D. QUALITY ASSURANCE**

1. Miami-Dade Department of Regulatory and Economic Resources (RER)

**E. MATERIAL CERTIFICATIONS**

1. Notice of Acceptance No. **11–0624.02** issued to **E.I. DuPont DeNemours & Co.**, Inc. for their "**DuPont SentryGlas® Interlayer**" dated 08/25/11, expiring on 01/14/17.
2. Notice of Acceptance No. **13–0129.27** issued to **E.I. DuPont DeNemours & Co., Inc.** for their **"DuPont Butacite® PVB Interlayer"** dated 04/11/13, expiring on 12/11/16.
3. Notice of Acceptance No. **14–0423.17** issued to **Eastman Chemical Company (MA)** for their "**Saflex Clear and Color Glass Interlayers**" dated 0619/14, expiring on 05/21/16.

**F. STATEMENTS**

1. Statement letters of conformance, complying with **FBC–2010**, and of no financial interest, dated October 20, 2014, prepared by manufacturer, both signed and sealed by Jorge E. Valdes, P.E.
2. Proposal No. **14–0341** issued by the Product Control Section, dated March 28, 2014, signed by Manuel Perez, P.E.

**G. OTHERS**

1. None.

Manuel Perez, P.E.
Product Control Examiner
NOA No. 14-0515.08
Expiration Date: December 11, 2019
Approval Date: December 11, 2014

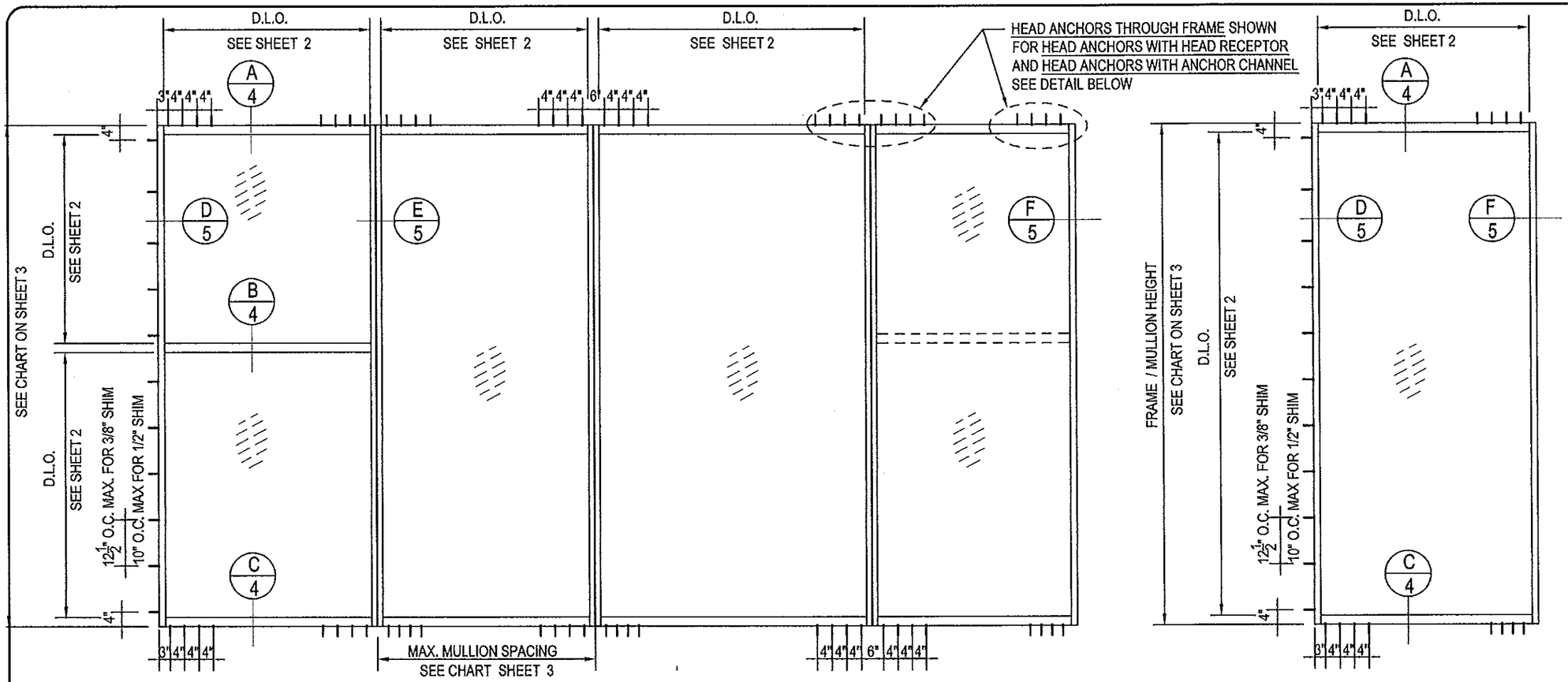


## TYPICAL ELEVATIONS

## SERIES 101 ALUM. WINDOW WALL SYSTEM (S.M.I.)

THIS SYSTEM MAY BE USED IN CONJUNCTION WITH MIAMI-DADE COUNTY APPR'D LARGE MISSILE IMPACT RESISTANT DOORS AND WINDOWS. FOR CONNECTION DETAILS TO MULLION SEE SEPARATE DOOR AND WINDOW NOA. LOWEST DESIGN LOAD CAPACITY OF DOOR, WINDOW OR MULLION SHALL APPLY FOR THE ENTIRE SYSTEM.

THIS PRODUCT HAS BEEN DESIGNED & TESTED IN ACCORDANCE WITH THE FLORIDA BUILDING CODE HIGH VELOCITY HURRICANE ZONE (HVHZ).

ANCHORS SHALL BE LISTED, SPACED AS SHOWN ON DETAILS, ANCHORS EMBEDMENT TO BASE MATERIAL SHALL BE BEYOND WALL DRESSING OR STUCCO.

MATERIALS INCLUDING BUT NOT LIMITED TO STEEL/METAL SCREWS, THAT COME INTO CONTACT WITH OTHER DISSIMILAR MATERIALS SHALL MEET THE REQUIREMENTS OF THE FLORIDA BLDG. CODE.

THIS SYSTEM IS RATED FOR SMALL MISSILE IMPACT. SHUTTERS ARE NOT REQUIRED.

## INSTRUCTIONS:

USE CHARTS AS FOLLOWS:

STEP 1: DETERMINE DESIGN WIND LOAD REQUIREMENT BASED ON WIND VELOCITY, BLDG. HEIGHT, WIND ZONE USING APPLICABLE ASCE 7 STANDARD.

STEP 2: SEE CHART ON SHEET 2 FOR DESIGN LOAD CAPACITY OF DESIRED GLASS SIZE.

STEP 3: CHECK MULLION CAPACITY FOR A GIVEN SPACING AND HEIGHT USING CHARTS ON SHEET 3. THE CAPACITY SHOULD EXCEED THE DESIGN LOAD.

STEP 4: THE LOWEST VALUE RESULTING FROM STEP 2 AND 3 SHALL APPLY TO ENTIRE SYSTEM

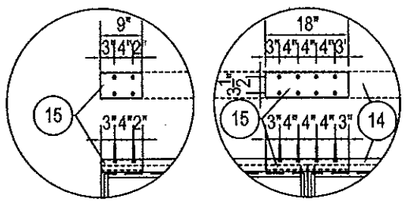


HEAD ANCHOR WITH HEAD RECEIPTOR

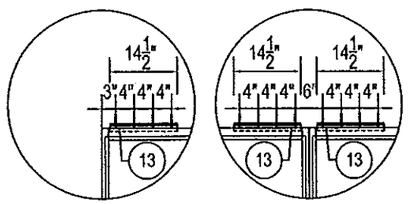


HEAD ANCHOR WITH ANCHOR CHANNEL

Approved as complying with the Florida Building Code
Date Dec. 11, 2014
NOA# 14-0515.03
Miami Dade Product Control
By Manuel Perez

Jorge E. Valdes,
Fla. PE# 67398
P.A.N. 28333

JORGE E. VALDES
LICENSE
No 67398
NOV 21 2014
STATE OF FLORIDA
PROFESSIONAL ENGINEER

Miami Wall Systems, Inc.
701 West 25th Street
Hialeah, Florida. 33010
Phone:(305) 888-2300 Fax:(305) 888-3058

SERIES 101
ALUM. WINDOW WALL SYSTEM
(S.M.I.)

| NO. | DATE | REVISION |
|---|---|---|

DATE: 10/21/2014
SCALE: AS NOTED
DWG. BY: O.J.L.
CHK. BY: JV
DWG NO.: 101-SMI
SHEET 1 OF 9

## GLASS DESIGN LOAD CAPACITY - PSF

| D.L.O. WIDTH INCHES | D.L.O. HEIGHT INCHES | GLASS TYPE "GL-1" EXT. (+) INT.(-) | GLASS TYPE "GL-2" EXT. (+) INT.(-) | GLASS TYPE "GL-3" EXT. (+) INT.(-) | GLASS TYPE "GL-4" "GL-5" "GL-6" EXT. (+) INT.(-) |
|---|---|---|---|---|---|
| 36 | 96 | 130.0 | 130.0 | 95.0 | 130.0 |
| 42 | | 130.0 | 130.0 | 95.0 | 130.0 |
| 48 | | 130.0 | 130.0 | 95.0 | 130.0 |
| 54 | | 130.0 | 130.0 | 95.0 | 130.0 |
| 60 | | 130.0 | 130.0 | 95.0 | 130.0 |
| 66 | | 130.0 | 130.0 | 95.0 | 130.0 |
| 72 | | 121.0 | 121.0 | 95.0 | 121.0 |
| 36 | 102 | 130.0 | 130.0 | 95.0 | 130.0 |
| 42 | | 130.0 | 130.0 | 95.0 | 130.0 |
| 48 | | 130.0 | 130.0 | 95.0 | 130.0 |
| 54 | | 130.0 | 130.0 | 95.0 | 130.0 |
| 60 | | 130.0 | 130.0 | 95.0 | 130.0 |
| 66 | | 119.0 | 119.0 | 95.0 | 119.0 |
| 72 | | 110.0 | 110.0 | 95.0 | 110.0 |
| 36 | 108 | 130.0 | 130.0 | 95.0 | 130.0 |
| 42 | | 130.0 | 130.0 | 95.0 | 130.0 |
| 48 | | 130.0 | 130.0 | 95.0 | 130.0 |
| 54 | | 130.0 | 130.0 | 95.0 | 130.0 |
| 60 | | 121.0 | 121.0 | 95.0 | 121.0 |
| 66 | | 112.0 | 112.0 | 95.0 | 112.0 |
| 72 | | 104.0 | 104.0 | 95.0 | 104.0 |
| 36 | 114 | 130.0 | 130.0 | 95.0 | 130.0 |
| 42 | | 130.0 | 130.0 | 95.0 | 130.0 |
| 48 | | 130.0 | 130.0 | 95.0 | 130.0 |
| 54 | | 130.0 | 130.0 | 95.0 | 130.0 |
| 60 | | 119.0 | 119.0 | 95.0 | 119.0 |
| 66 | | 106.0 | 106.0 | 95.0 | 106.0 |
| 72 | | 100.0 | 100.0 | 95.0 | 100.0 |
| 36 | 120 | 130.0 | 130.0 | 95.0 | 130.0 |
| 42 | | 130.0 | 130.0 | 95.0 | 130.0 |
| 48 | | 130.0 | 130.0 | 95.0 | 130.0 |
| 54 | | 130.0 | 130.0 | 95.0 | 130.0 |
| 60 | | 113.0 | 113.0 | 95.0 | 113.0 |
| 66 | | 100.0 | 100.0 | 95.0 | 100.0 |
| 36 | 126 | 130.0 | 130.0 | 95.0 | - |
| 42 | | 130.0 | 130.0 | 95.0 | - |
| 48 | | 130.0 | 130.0 | 95.0 | - |
| 54 | | 125.0 | 125.0 | 95.0 | - |
| 60 | | 107.0 | 107.0 | 95.0 | - |
| 66 | | 98.0 | 98.0 | 95.0 | - |
| 36 | 132 | 130.0 | 130.0 | 95.0 | - |
| 42 | | 130.0 | 130.0 | 95.0 | - |
| 48 | | 130.0 | 130.0 | 95.0 | - |
| 54 | | 121.0 | 121.0 | 95.0 | - |
| 60 | | 104.0 | 104.0 | 95.0 | - |
| 36 | 138 | 130.0 | 130.0 | 95.0 | - |
| 42 | | 130.0 | 130.0 | 95.0 | - |
| 48 | | 130.0 | 130.0 | 95.0 | - |
| 54 | | 121.0 | 121.0 | 95.0 | - |
| 57 | | 114.0 | 114.0 | 95.0 | - |

NOTE: GLASS CAPACITIES ON THIS SHEET ARE BASED ON ASTM E1300-09 (3 SEC. GUSTS) AND FLORIDA BUILDING COMMISSION DECLARATORY STATEMENT DCA05-DEC-219

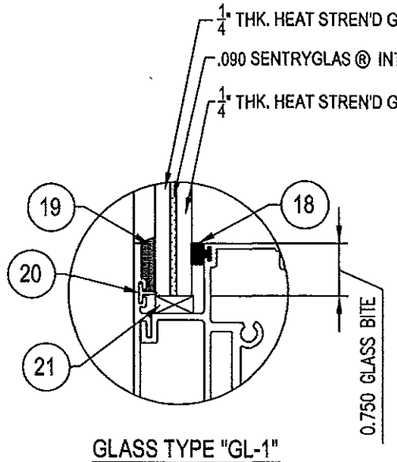


GLASS TYPE "GL-1"

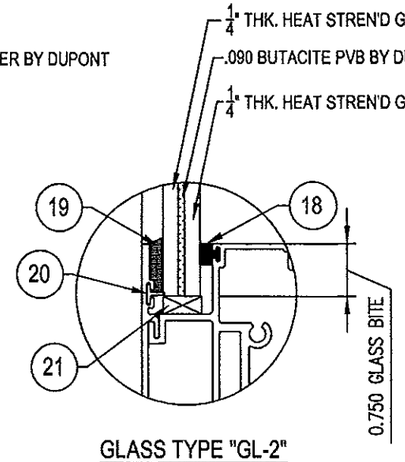


GLASS TYPE "GL-2"

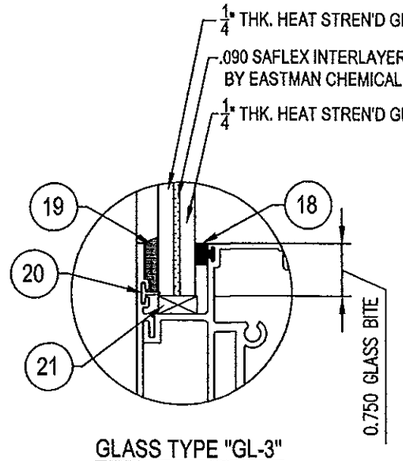


GLASS TYPE "GL-3"

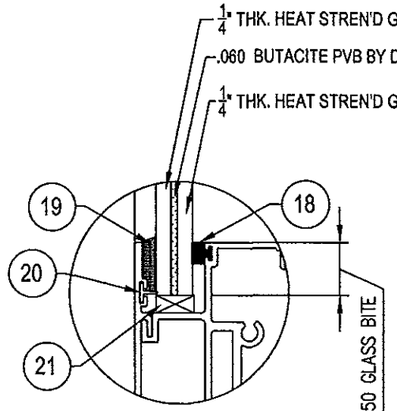


GLASS TYPE "GL-4"

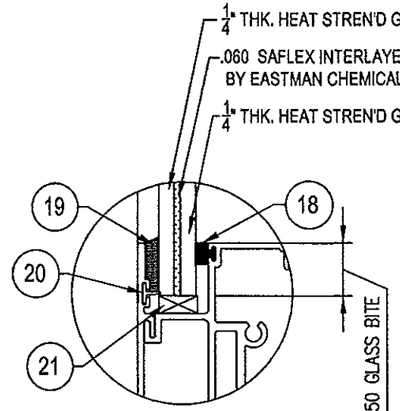


GLASS TYPE "GL-5"

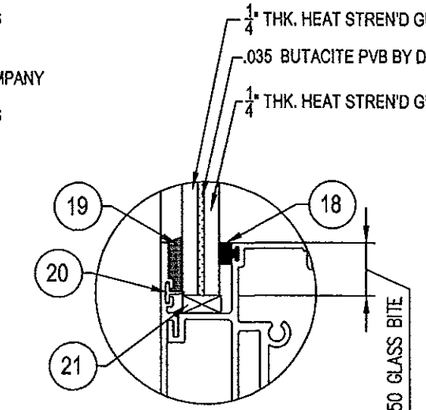


GLASS TYPE "GL-6"

## GLAZING OPTIONS

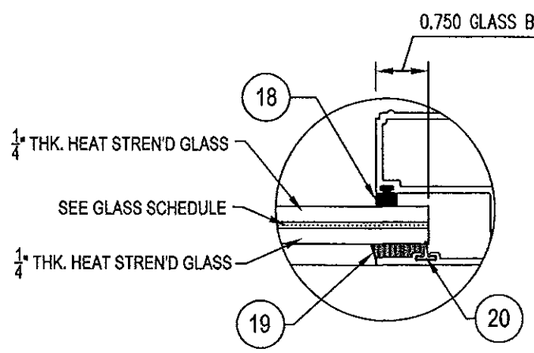


Approved as complying with the Florida Building Code
Date Dec. 11, 2014
NOA# 14-0515.08
Miami Dade Product Control
By

Jorge E. Valdes
Fla. P.E.# 67398
CA P.E. 28569

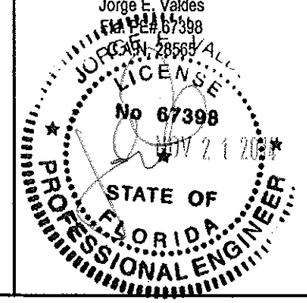



Miami Wall Systems, Inc.
701 West 25th Street
Hialeah, Florida. 33010
Phone:(305) 888-2300 Fax:(305) 888-3058


SERIES 101
ALUM. WINDOW WALL SYSTEM
(S.M.I.)

| NO. | DATE | REVISION |
|---|---|---|
| | | |

DATE: 10/21/2014
SCALE: AS NOTED
DWG. BY: O.J.L.
CHK. BY: JV
DWG NO.: 101-SMI
SHEET 2 OF 9

CHART "A"

| MULLION DESIGN LOAD CAPACITY - PSF | | | | | | | | |
|---|---|---|---|---|---|---|---|---|
| NOMINAL DIMENSIONS (INCHES) | | MULLION TYPE | | | | | ANCHOR TYPE | |
| | | "M1" | "M2" | "M3" | "M4" | "M5" | "A", "B" | "A1", "B1" |
| WIDTH (W) | FRAME HEIGHT | EXT. (+) INT(-) | EXT. (+) INT(-) | EXT. (+) INT(-) | EXT. (+) INT(-) | EXT. (+) INT(-) | EXT. (+) INT(-) | EXT. (+) INT(-) |
| 30 | 72 | 95.0 | 95.0 | 110.0 | 130.0 | 130.0 | 130.0 | 130.0 |
| 36 | | 95.0 | 95.0 | 110.0 | 130.0 | 130.0 | 130.0 | 130.0 |
| 42 | | 95.0 | 95.0 | 110.0 | 130.0 | 130.0 | 130.0 | 130.0 |
| 48 | | 95.0 | 95.0 | 110.0 | 130.0 | 130.0 | 130.0 | 130.0 |
| 54 | | 95.0 | 95.0 | 110.0 | 130.0 | 130.0 | 130.0 | 130.0 |
| 60 | | 95.0 | 95.0 | 110.0 | 130.0 | 127.0 | 120.0 | 130.0 |
| 66 | | 95.0 | 95.0 | 110.0 | 130.0 | 115.0 | 109.1 | 130.0 |
| 72 | | 95.0 | 95.0 | 110.0 | 130.0 | 105.0 | 100.0 | 130.0 |
| 30 | 84 | 95.0 | 95.0 | 110.0 | 130.0 | 130.0 | 130.0 | 130.0 |
| 36 | | 95.0 | 95.0 | 110.0 | 130.0 | 130.0 | 130.0 | 130.0 |
| 42 | | 95.0 | 95.0 | 110.0 | 130.0 | 130.0 | 130.0 | 130.0 |
| 48 | | 95.0 | 95.0 | 110.0 | 130.0 | 130.0 | 128.6 | 130.0 |
| 54 | | 95.0 | 95.0 | 110.0 | 130.0 | 121.0 | 114.3 | 130.0 |
| 60 | | 95.0 | 95.0 | 110.0 | 130.0 | 108.0 | 102.9 | 130.0 |
| 66 | | - | 95.0 | 110.0 | 130.0 | 99.0 | 93.5 | 130.0 |
| 30 | 96 | 95.0 | 95.0 | 110.0 | 130.0 | 130.0 | 130.0 | 130.0 |
| 36 | | 95.0 | 95.0 | 110.0 | 130.0 | 130.0 | 130.0 | 130.0 |
| 42 | | 95.0 | 95.0 | 110.0 | 130.0 | 130.0 | 128.6 | 130.0 |
| 48 | | 95.0 | 95.0 | 110.0 | 130.0 | 119.0 | 112.5 | 130.0 |
| 54 | | 95.0 | 95.0 | 110.0 | 130.0 | 105.0 | 100.0 | 130.0 |
| 60 | | - | 95.0 | 110.0 | 130.0 | 95.0 | 90.0 | 130.0 |
| 30 | 102 | 95.0 | 95.0 | 110.0 | 130.0 | 130.0 | 130.0 | 130.0 |
| 36 | | 95.0 | 95.0 | 110.0 | 130.0 | 130.0 | 130.0 | 130.0 |
| 42 | | 95.0 | 95.0 | 110.0 | 130.0 | 128.0 | 121.0 | 130.0 |
| 48 | | 95.0 | 95.0 | 110.0 | 130.0 | 112.0 | 105.9 | 130.0 |
| 54 | | - | 95.0 | 110.0 | 130.0 | 99.0 | 94.1 | 130.0 |
| 60 | | - | 95.0 | 110.0 | 130.0 | 89.0 | 84.7 | 130.0 |
| 30 | 114 | - | 95.0 | 110.0 | 130.0 | 130.0 | 130.0 | 130.0 |
| 36 | | - | 95.0 | 110.0 | 130.0 | 130.0 | 126.3 | 130.0 |
| 42 | | - | 95.0 | 110.0 | 130.0 | 114.0 | 108.3 | 130.0 |
| 48 | | - | 95.0 | 110.0 | 130.0 | 100.0 | 94.7 | 130.0 |
| 54 | | - | 95.0 | 110.0 | 130.0 | 89.0 | 84.2 | 130.0 |
| 60 | | - | 95.0 | 110.0 | 130.0 | 80.0 | 75.8 | 130.0 |
| 30 | 122 | - | 95.0 | 110.0 | 130.0 | 130.0 | 130.0 | 130.0 |
| 36 | | - | 95.0 | 110.0 | 130.0 | 125.0 | 118.0 | 130.0 |
| 42 | | - | 95.0 | 110.0 | 130.0 | 107.0 | 101.2 | 130.0 |
| 48 | | - | 95.0 | 110.0 | 130.0 | 93.0 | 88.5 | 130.0 |
| 60 | | - | - | 110.0 | 130.0 | 75.0 | 70.8 | 129.7 |

CHART "B"

| MULLION DESIGN LOAD CAPACITY - PSF | | | | | |
|---|---|---|---|---|---|
| NOMINAL DIMENSIONS (INCHES) | | MULLION TYPE | | ANCHOR TYPE | |
| | | "M5" | "M6" | "A", "B" | "A1", "B1" |
| WIDTH (W) | FRAME HEIGHT | EXT. (+) INT(-) | EXT. (+) INT(-) | EXT. (+) INT(-) | EXT. (+) INT(-) |
| 30 | 120 | 130.0 | 130.0 | 130.0 | 130.0 |
| 36 | | 127.0 | 130.0 | 120.0 | 130.0 |
| 42 | | 108.0 | 130.0 | 102.9 | 130.0 |
| 48 | | 95.0 | 130.0 | 90.0 | 130.0 |
| 54 | | 84.0 | 130.0 | 80.0 | 130.0 |
| 60 | | 80.0 | 130.0 | 72.0 | 130.0 |
| 66 | | - | 130.0 | 65.5 | 119.9 |
| 72 | | - | 130.0 | 60.0 | 109.9 |
| 30 | 126 | 80.0 | 130.0 | 130.0 | 130.0 |
| 36 | | 80.0 | 130.0 | 114.3 | 130.0 |
| 42 | | 80.0 | 130.0 | 98.0 | 130.0 |
| 48 | | 80.0 | 130.0 | 85.7 | 130.0 |
| 54 | | 80.0 | 130.0 | 76.2 | 130.0 |
| 60 | | - | 130.0 | 68.6 | 125.6 |
| 66 | | - | 130.0 | 62.3 | 114.1 |
| 30 | 132 | 80.0 | 130.0 | 130.0 | 130.0 |
| 36 | | 80.0 | 130.0 | 109.1 | 130.0 |
| 42 | | 80.0 | 130.0 | 93.5 | 130.0 |
| 48 | | 80.0 | 130.0 | 81.8 | 130.0 |
| 54 | | 80.0 | 130.0 | 72.7 | 130.0 |
| 60 | | - | 130.0 | 65.5 | 119.9 |
| 30 | 138 | 80.0 | 130.0 | 125.2 | 130.0 |
| 36 | | 80.0 | 130.0 | 104.3 | 130.0 |
| 42 | | 80.0 | 130.0 | 89.4 | 130.0 |
| 48 | | 80.0 | 130.0 | 78.3 | 130.0 |
| 54 | | - | 130.0 | 69.6 | 127.4 |
| 60 | | - | 130.0 | 62.6 | 114.6 |
| 30 | 144 | 80.0 | 130.0 | 120.0 | 130.0 |
| 36 | | 80.0 | 130.0 | 100.0 | 130.0 |
| 42 | | 80.0 | 130.0 | 85.7 | 130.0 |
| 48 | | 80.0 | 130.0 | 75.0 | 130.0 |
| 54 | | - | 130.0 | 66.7 | 122.1 |
| 60 | | - | 130.0 | 60.0 | 109.9 |

CHART "C"

| MULLION DESIGN LOAD CAPACITY - PSF | | | |
|---|---|---|---|
| NOMINAL DIMENSIONS (INCHES) | | MULLION TYPE | ANCHOR TYPE |
| | | "M7" | "A1", "B1" |
| WIDTH (W) | FRAME HEIGHT | EXT. (+) INT(-) | EXT. (+) INT(-) |
| 30 | 150 | 95.0 | 95.0 |
| 36 | | 95.0 | 95.0 |
| 42 | | 95.0 | 95.0 |
| 48 | | 95.0 | 95.0 |
| 54 | | 95.0 | 95.0 |
| 60 | | 95.0 | 95.0 |
| 66 | | 95.0 | 95.0 |
| 68 | | 95.0 | 93.1 |
| 30 | 156 | 95.0 | 95.0 |
| 36 | | 95.0 | 95.0 |
| 42 | | 95.0 | 95.0 |
| 48 | | 95.0 | 95.0 |
| 54 | | 95.0 | 95.0 |
| 60 | | 95.0 | 95.0 |
| 66 | | 95.0 | 92.2 |
| 68 | | 95.0 | 89.5 |
| 30 | 162 | 95.0 | 95.0 |
| 36 | | 95.0 | 95.0 |
| 42 | | 95.0 | 95.0 |
| 48 | | 95.0 | 95.0 |
| 54 | | 95.0 | 95.0 |
| 60 | | 95.0 | 95.0 |
| 66 | | 95.0 | 88.8 |
| 68 | | 95.0 | 86.2 |
| 30 | 168 | 95.0 | 95.0 |
| 36 | | 95.0 | 95.0 |
| 42 | | 95.0 | 95.0 |
| 48 | | 95.0 | 95.0 |
| 54 | | 95.0 | 95.0 |
| 60 | | 95.0 | 94.2 |
| 66 | | 95.0 | 95.6 |
| 68 | | 95.0 | 83.1 |

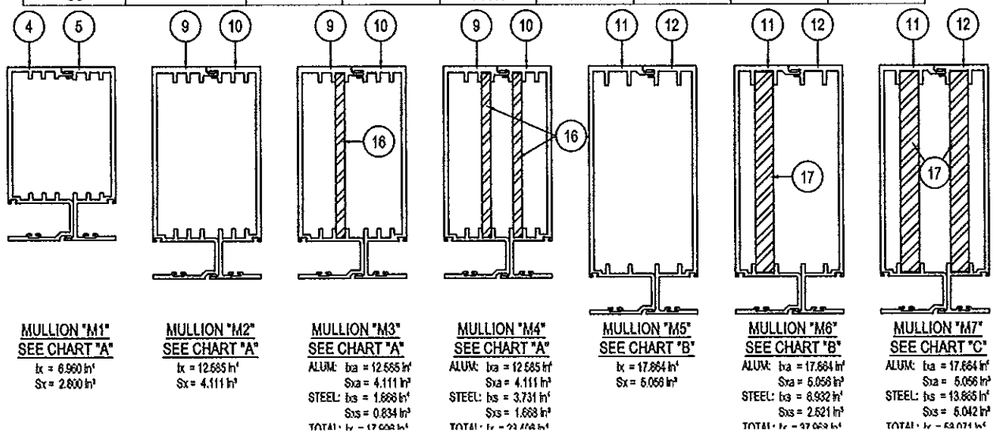


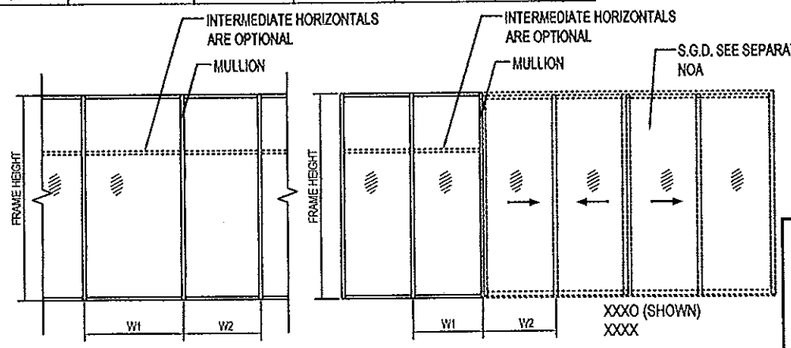


$$\text{WIDTH (W)} = \frac{W1 + W2}{2}$$

Approved as complying with the Florida Building Code
Date Dec 11 2014
NOA# 14-0515.08
Miami Dade Product Control
By Manuel Perez

Jorge E. Valdes
P.E. #67398

JORGE E. VALDES LICENSE No 67398 STATE OF FLORIDA PROFESSIONAL ENGINEER


Miami Wall Systems, Inc.
701 West 25th Street
Hialeah, Florida. 33010
Phone:(305) 888-2300 Fax:(305) 888-3058


SERIES 101
ALUM. WINDOW WALL SYSTEM
(S.M.I.)

| NO. | DATE | REVISION |
|---|---|---|
| | | |

DATE: 10/21/2014
SCALE: AS NOTED
DWG. BY: O.J.L.
CHK. BY: JV
DWG NO.: 101-SMI
SHEET 3 OF 9

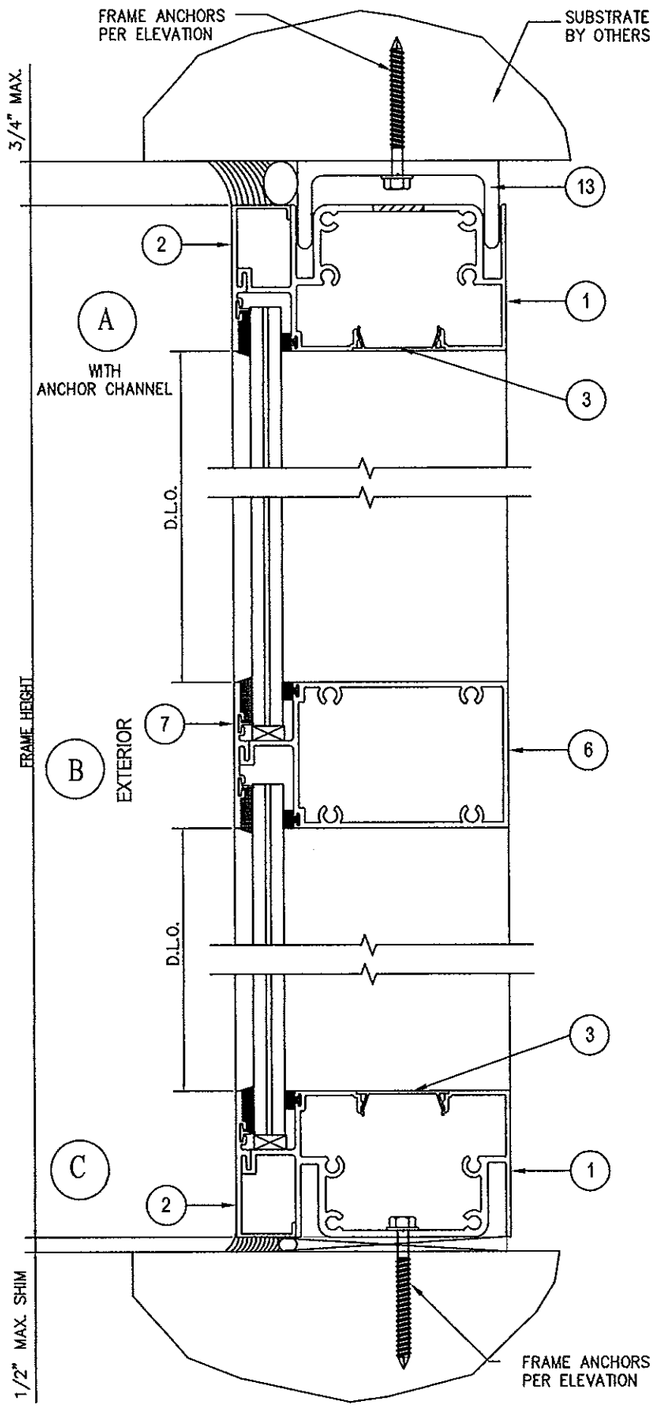


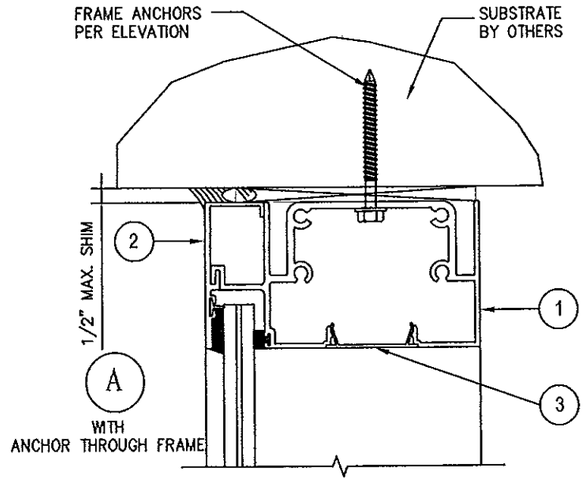


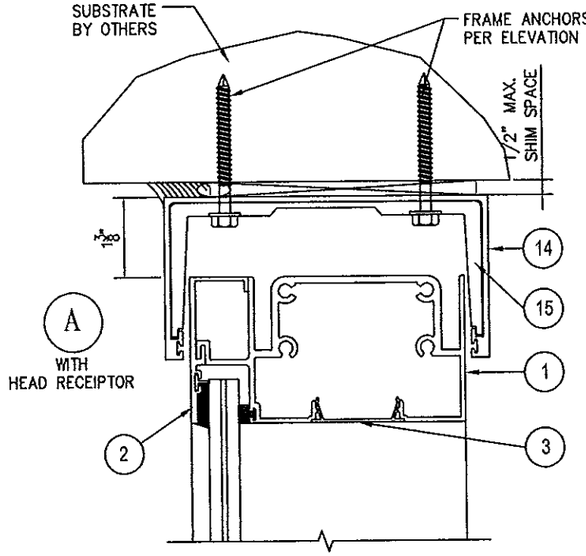


TYPICAL ANCHORS: SEE ELEV. FOR SPACING

AT HEAD & SILL

TYPE. "A": 1/4" DIA. ULTRACON BY "ELCO" (Fu=177 KSI, Fy=155 KSI)
DIRECTLY INTO CONCRETE WITH 1-3/4" MIN. EMBED, fc'=3000 psi
TYPE. "A1": 5/16" DIA. ULTRACON BY "ELCO" (Fu=177 KSI, Fy=155 KSI)
DIRECTLY INTO CONCRETE WITH 2" MIN. EMBED, fc'=3515 psi

TYPE. "B": 1/4" DIA. DRILL FLEX OR SELF DRILLING SCREWS (Fu=92 KSI, Fy=120 KSI)
TYPE. "B1": 5/16" DIA. DRILL FLEX OR SELF DRILLING SCREWS (Fu=92 KSI, Fy=120 KSI)
INTO METAL STRUCTURES OR APPROVED MULLIONS
STEEL: 1/8" THICK MIN. (Fy = 36 KSI MIN.)
ALUMINUM: 1/8" THICK MIN. (6063-T5 MIN.)
(STEEL IN CONTACT WITH ALUMINUM TO BE PLATED OR PAINTED)

AT JAMBS

1/4" DIA. ULTRACON BY "ELCO" (Fu=177 KSI, Fy=155 KSI)
THRU 1BY BUCKS, 1-3/4" MIN. CONC. OR MASONRY EMBEDMENT
DIRECTLY INTO CONCRETE OR MASONRY WITH 1-3/4" MIN. EMBED

1/4" DIA. DRILL FLEX OR SELF DRILLING SCREWS (Fu=92 KSI, Fy=120 KSI)
INTO METAL STRUCTURES OR APPROVED MULLIONS
STEEL: 1/8" THICK MIN. (Fy = 36 KSI MIN.)
ALUMINUM: 1/8" THICK MIN. (6063-T5 MIN.)
(STEEL IN CONTACT WITH ALUMINUM TO BE PLATED OR PAINTED)

TYPICAL EDGE DISTANCE:
INTO CONCRETE = 2-1/2" MIN. FOR 1/4" DIA. ANCHORS
= 3-1/8" MIN. FOR 5/16" DIA. ANCHORS
INTO METAL STRUCTURE = 3/4" MIN.

CONCRETE AT HEAD, SILL OR JAMBS fc' = 3000 PSI MIN.
C-90 HOLLOW/FILLED BLOCK AT JAMBS fm' = 2000 PSI MIN.

Approved as complying with the
Florida Building Code
Date Dec. 11, 2014
NOA# 14-0515.03
Miami Dade Product Control
By


Jorge E. Valdes
Fla. PE# 67398
C.A.N. 28565


JORGE E. VALDES LICENSE No. 67398 NOV 21 2014 STATE OF FLORIDA PROFESSIONAL ENGINEER


Miami Wall Systems, Inc.
701 West 25th Street
Hialeah, Florida. 33010
Phone:(305) 888-2300 Fax:(305) 888-3058


SERIES 101
ALUM. WINDOW WALL SYSTEM
(S.M.I.)

| NO. | DATE | REVISION |
|---|---|---|
| | | |

DATE: 10/21/2014
SCALE: AS NOTED
DWG. BY: O.J.L.
CHK. BY: JV
DWG NO.: 101-SMI
SHEET 4 OF 9

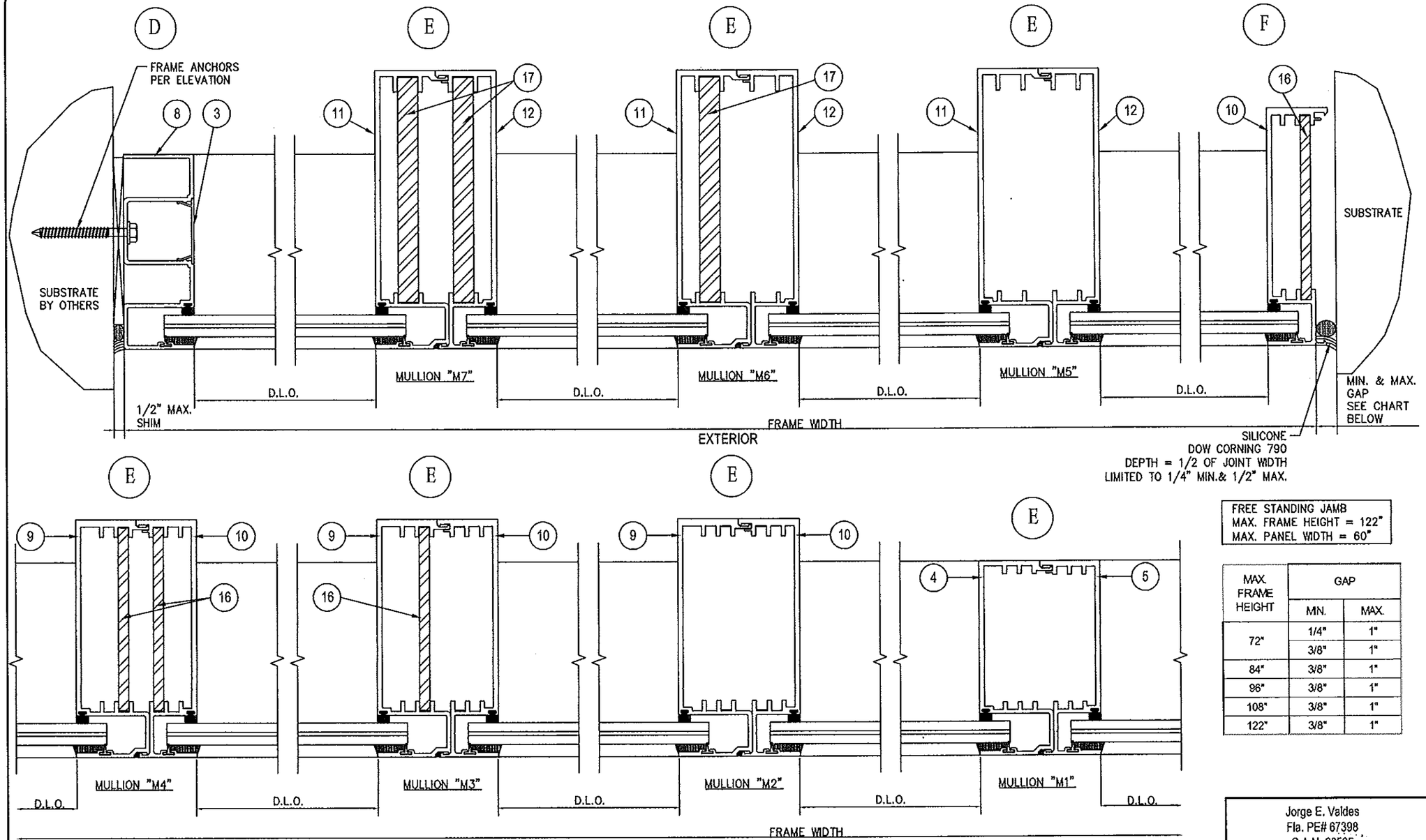


FREE STANDING JAMB
MAX. FRAME HEIGHT = 122"
MAX. PANEL WIDTH = 60"

| MAX. FRAME HEIGHT | GAP | |
|---|---|---|
| | MIN. | MAX. |
| 72" | 1/4" | 1" |
| | 3/8" | 1" |
| 84" | 3/8" | 1" |
| 96" | 3/8" | 1" |
| 108" | 3/8" | 1" |
| 122" | 3/8" | 1" |

FOR MULLION PROPERTIES AND DESIGN LOAD CAPACITY TABLES, SEE SHEET 3 OF 9

Approved as complying with the Florida Building Code
Date Dec. 11, 2014
NOA# 14-0515.05
Miami Dade Product Control
By

Jorge E. Valdes
Fla. PE# 67398
C.A.N. 28585

JORGE E. VALDES LICENSE No 67398 NOV 21 2014 STATE OF FLORIDA PROFESSIONAL ENGINEER

Miami Wall Systems, Inc.
701 West 25th Street
Hialeah, Florida. 33010
Phone:(305) 888-2300 Fax:(305) 888-3058

SERIES 101
ALUM. WINDOW WALL SYSTEM
(S.M.I.)

| NO. | DATE | REVISION |
|---|---|---|
| | | |

DATE: 10/21/2014
SCALE: AS NOTED
DWG. BY: O.J.L.
CHK. BY: JV
DWG NO.: 101-SMI
SHEET 5 OF 9

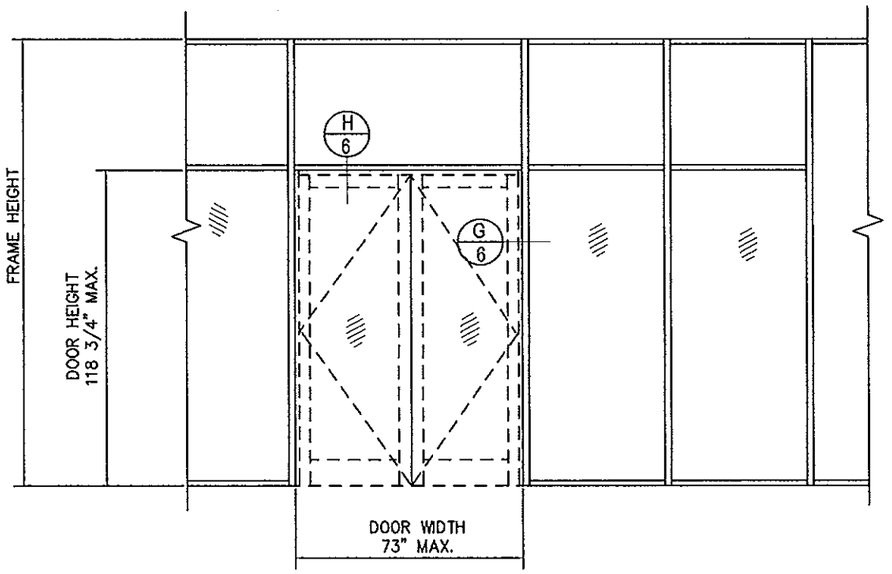


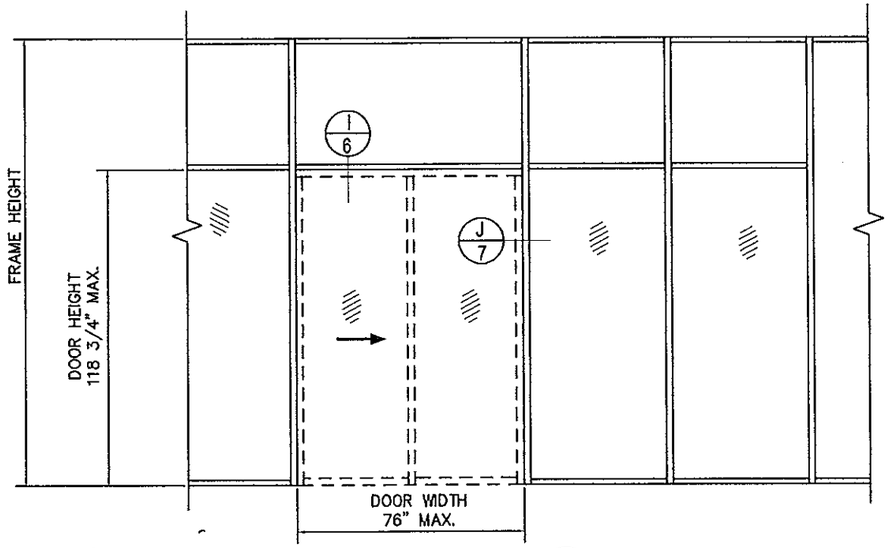


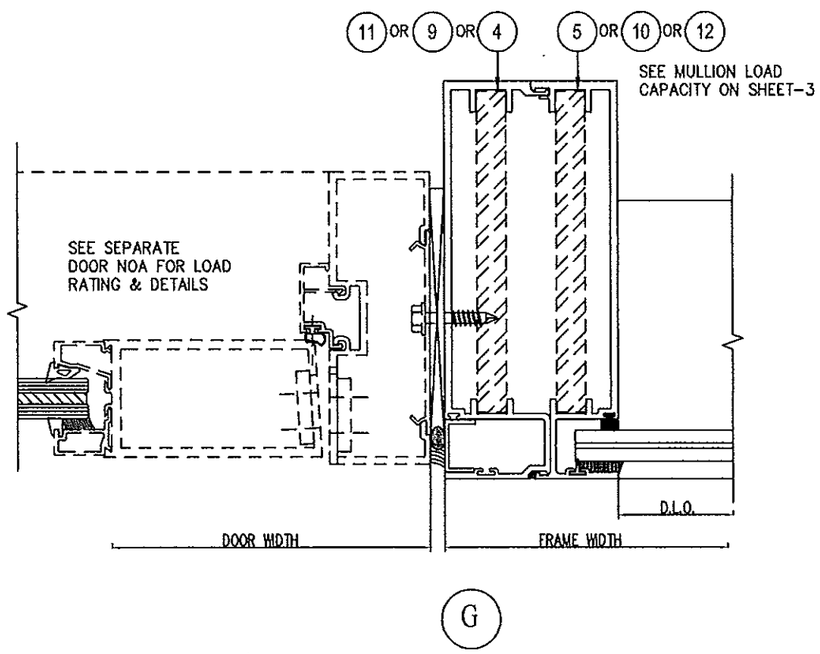


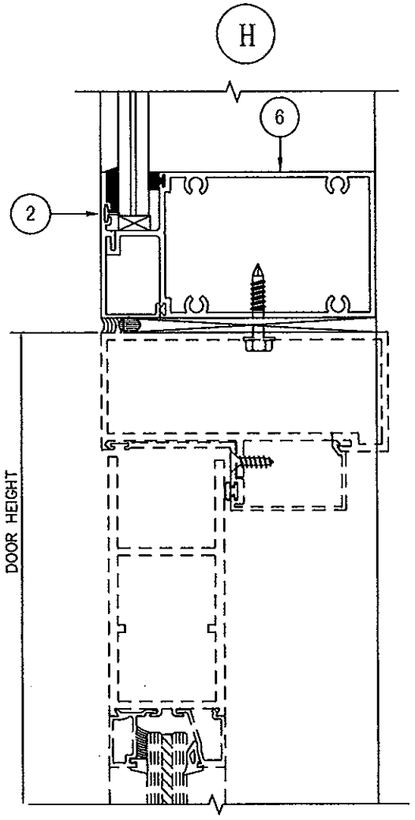


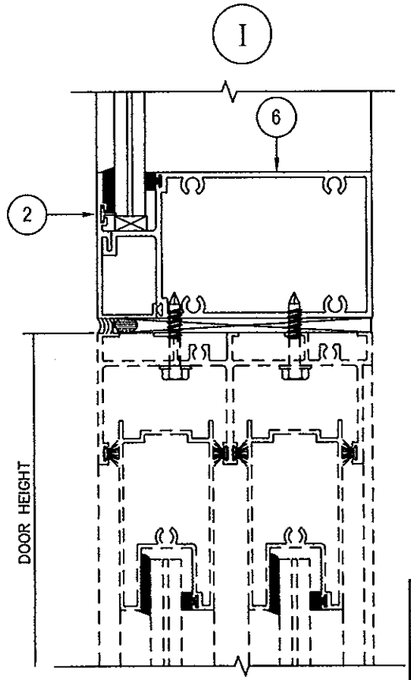


Approved as complying with the
Florida Building Code
Date Dec. 11, 2014
NOA# 14-0515.08
Miami Dade Product Control
By Manuel Perez

Jorge E. Valdes
Fla. PE# 67398
O.A.E. 28565

JORGE E. VALDES
LICENSE
No 67398
NOV 21 2014
STATE OF
FLORIDA
PROFESSIONAL ENGINEER


Miami Wall Systems, Inc.
701 West 25th Street
Hialeah, Florida. 33010
Phone:(305) 888-2300 Fax:(305) 888-3058


SERIES 101
ALUM. WINDOW WALL SYSTEM
(S.M.I.)

| NO. | DATE | REVISION |
|---|---|---|
| | | |

DATE: 10/21/2014
SCALE: AS NOTED
DWG. BY: O.J.L.
CHK. BY: JV
DWG NO.: 101-SMI
SHEET 6 OF 9

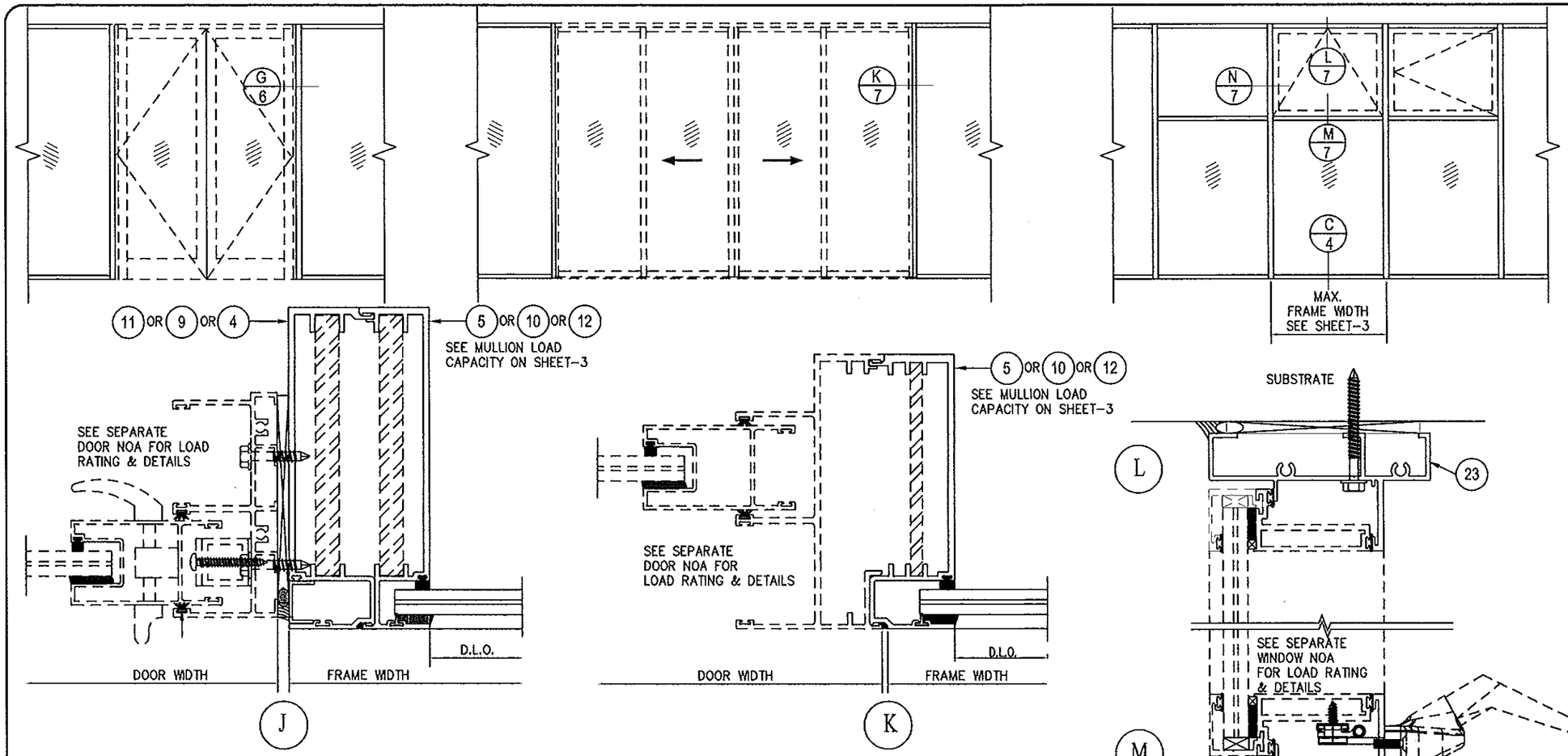





J




K

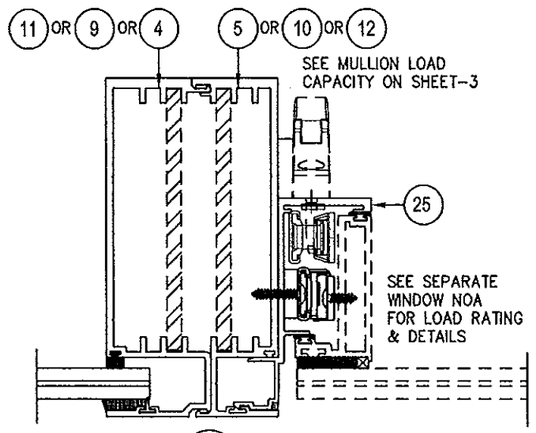


N

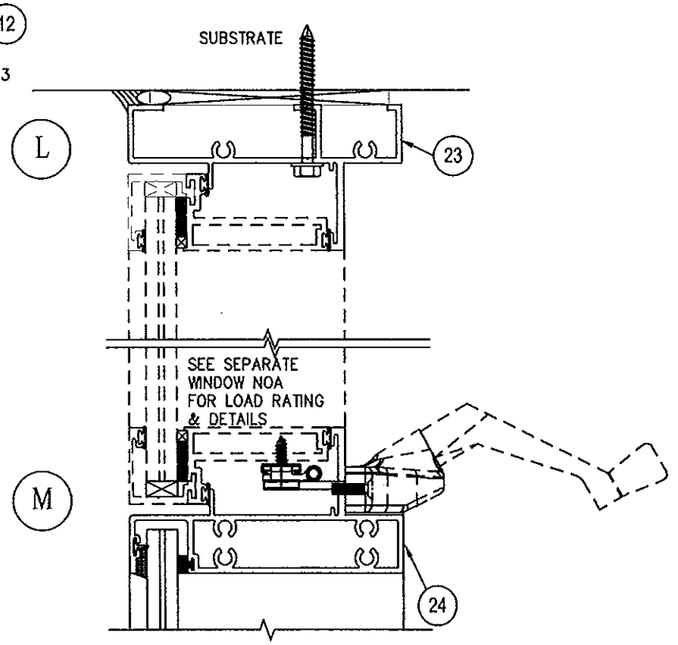


M

Approved as complying with the
Florida Building Code
Date Dec. 11, 2014
NOA# 14-0515.03
Miami Dade Product Control
By Manuel Lorz

Jorge E. Valdes
Fla. PE# 67398
C.A.N. 28565

JORGE E. VALDES
LICENSE
No. 67398
NOV 21 2014
STATE OF
FLORIDA
PROFESSIONAL ENGINEER


Miami Wall Systems, Inc.
701 West 25th Street
Hialeah, Florida. 33010
Phone:(305) 888-2300 Fax:(305) 888-3058


SERIES 101
ALUM. WINDOW WALL SYSTEM
(S.M.I.)

| NO. | DATE | REVISION |
|---|---|---|
| | | |

DATE: 10/21/2014
SCALE: AS NOTED
DWG. BY: O.J.L.
CHK. BY: JV
DWG NO.: 101-SMI
SHEET 7 OF 9

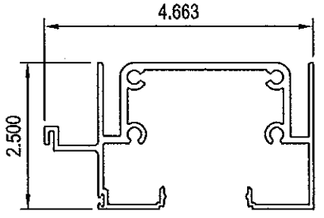


1 HEAD / SILL FRAME
101-401
TYP. WALL THK = 0.076"
MAT: ALUM. ALLOY 6063-T6

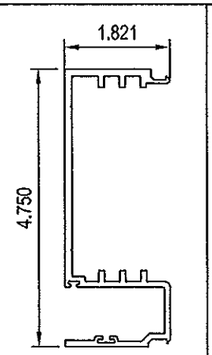


4 MALE VERTICAL MULLION
101-404
TYP. WALL THK = 0.125"
MAT: ALUM. ALLOY 6063-T6

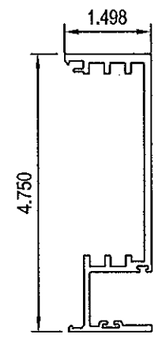


5 FEMALE VERTICAL MULLION
101-405
TYP. WALL THK = 0.125"
MAT: ALUM. ALLOY 6063-T6

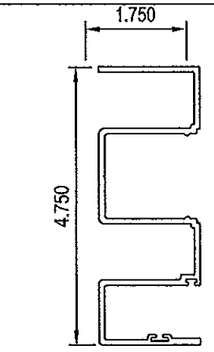


8 JAMB FRAME
101-408
TYP. WALL THK = 0.100"
MAT: ALUM. ALLOY 6063-T6

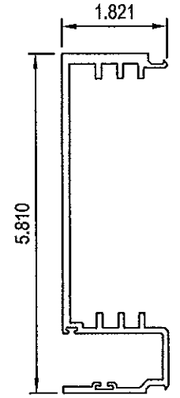


9 MEDIUM
MALE VERTICAL MULLION
101-409
TYP. WALL THK = 0.125"
MAT: ALUM. ALLOY 6063-T6

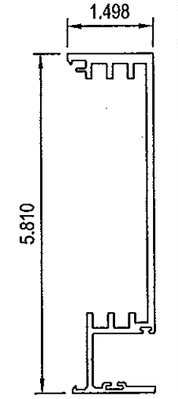


10 MEDIUM
FEMALE VERTICAL MULLION
101-410
TYP. WALL THK = 0.125"
MAT: ALUM. ALLOY 6063-T6

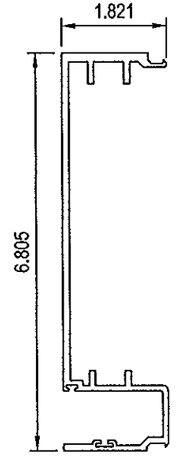


11 HEAVY
MALE VERTICAL MULLION
101-411
TYP. WALL THK = 0.125"
MAT: ALUM. ALLOY 6063-T6

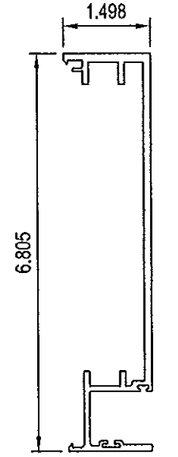


12 HEAVY
FEMALE VERTICAL MULLION
101-412
TYP. WALL THK = 0.125"
MAT: ALUM. ALLOY 6063-T6

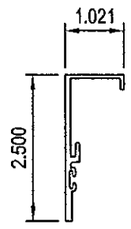


2 FRAME GLAZING BEAD
101-402
TYP. WALL THK = 0.110"
MAT: ALUM. ALLOY 6063-T6

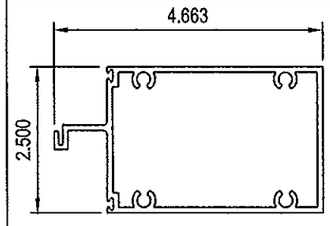


6 HORIZONTAL MEETING RAIL
101-406
TYP. WALL THK = 0.078"
MAT: ALUM. ALLOY 6063-T6

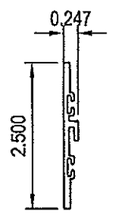


7 GLAZING BEAD
AT MEETING RAIL
101-407
TYP. WALL THK = 0.110"
MAT: ALUM. ALLOY 6063-T6

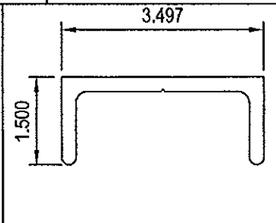


13 CHANNEL
101-413
TYP. WALL THK = 0.250"
MAT: ALUM. ALLOY 6005A-T61

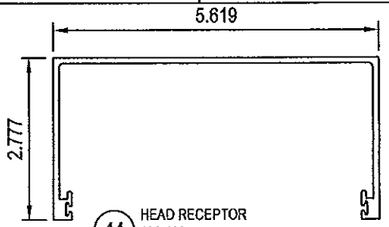


14 HEAD RECEPTOR
101-423
TYP. WALL THK = 0.090"
MAT: ALUM. ALLOY 6063-T6

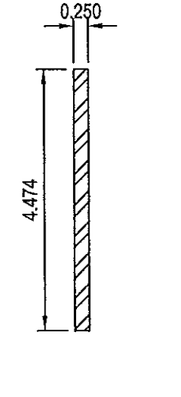


16 REINFORCEMENT BAR
MAT: STEEL A36

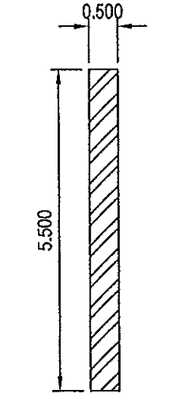


17 REINFORCEMENT BAR
MAT: STEEL A36

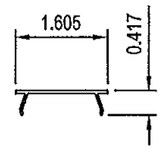


3 FASTENER COVER
101-403
TYP. WALL THK = 0.050"
MAT: ALUM. ALLOY 6063-T6

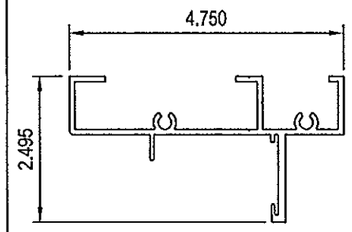


23 ZERO SL FRAME
2061-001
TYP. WALL THK = 0.093"
MAT: ALUM. ALLOY 6063-T6

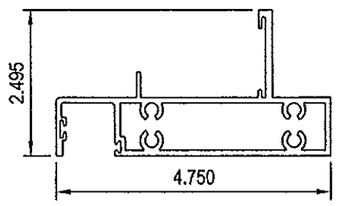


24 ZERO SL MEETING RAIL
2061-002
TYP. WALL THK = 0.093"
MAT: ALUM. ALLOY 6063-T6

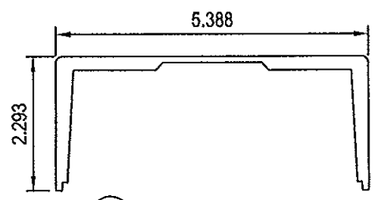


15 HEAD RECEPTOR REINFORCEMENT
101-424
TYP. WALL THK = 0.229"
MAT: ALUM. ALLOY 6005A-T61

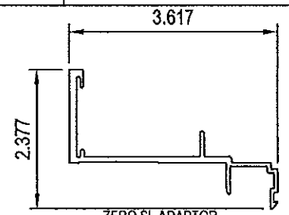


25 ZERO SL ADAPTOR
2061-005
TYP. WALL THK = 0.100"
MAT: ALUM. ALLOY 6063-T6

Approved as complying with the
Florida Building Code
Date Dec. 11, 2014
NOA# 14-0515.05
Miami Dade Product Control
By Manuel Perez

Jorge E. Valdes
Fla. PE# 67398
C.A.N. 28565

JORGE E. VALDES
LICENSE
No. 67398
NOV 11 2014
STATE OF FLORIDA
PROFESSIONAL ENGINEER


Miami Wall Systems, Inc.
701 West 25th Street
Hialeah, Florida. 33010
Phone:(305) 888-2300 Fax:(305) 888-3058


SERIES 101
ALUM. WINDOW WALL SYSTEM
(S.M.I.)

| NO. | DATE | REVISION |
|---|---|---|
| | | |

DATE: 10/21/2014
SCALE: AS NOTED
DWG. BY: O.J.L.
CHK. BY: JV
DWG NO.: 101-SMI
SHEET 8 OF 9

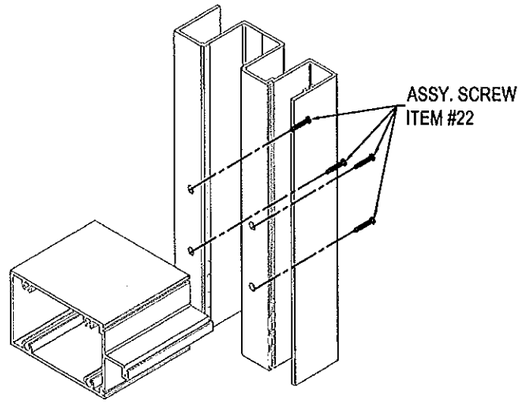


MEETING RAIL ASSEMBLY DETAIL

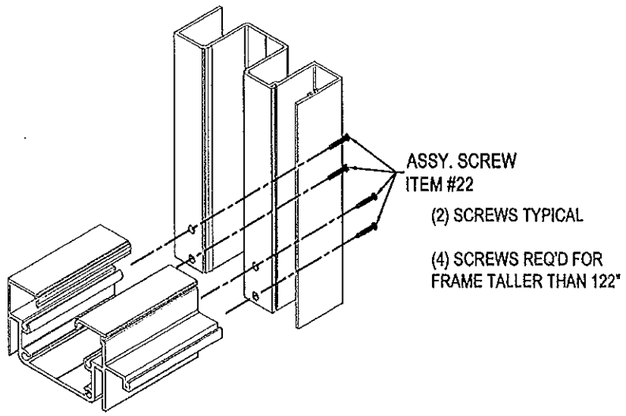


FRAME CORNER ASSEMBLY DETAIL

| ITEM # | PART # | DESCRIPTION | REMARKS |
|---|---|---|---|
| 1 | 101-401 | SILL / HEAD FRAME | FRAME |
| 2 | 101-402 | FRAME GALZING BEAD | FRAME |
| 3 | 101-403 | FASTENER COVER | FRAME |
| 4 | 101-404 | MALE VERTICAL MULLION | |
| 5 | 101-405 | FEMALE VERTICAL MULLION | |
| 6 | 101-406 | HORIZONTAL MEETING RAIL | FRAME |
| 7 | 101-407 | GLAZING BEAD FOR MEETING RAIL | FRAME |
| 8 | 101-408 | JAMB FRAME | FRAME |
| 9 | 101-409 | MEDIUM MALE VERTICAL MULLION | FRAME |
| 10 | 101-410 | MEDIUM FEMALE VERTICAL MULLION | FRAME |
| 11 | 101-411 | HEAVY MALE VERTICAL MULLION | FRAME |
| 12 | 101-412 | HEAVY FEMALE VERTICAL MULLION | FRAME |
| 13 | 101-413 | CHANNEL (MILL) | AT HEAD FRAME, SEE ELEV. FOR LOCATIONS |
| 14 | 101-423 | HEAD RECEIPTOR | AT HEAD FRAME |
| 15 | 101-424 | HEAD RECEIPTOR REINFORCEMENT | |
| 16 | | 1/2" X 4 1/2" REINFORCEMENT BAR | |
| 17 | | 1/2" X 5 1/2" REINFORCEMENT BAR | |
| 18 | G-101-01 | SPACER | FOR 9/16" LAMINATED GLASS |
| 19 | SILICONE | TREMCO PROGLAZE | AT PANELS 9/16" GLASS |
| 20 | G-101-02 | BACKER FLAP | SEE GLAZING DETAILS |
| 21 | | 1/4" X 1/2" X 4" LG SETTING BLOCK | |
| 22 | | #14" X 1 1/2" HEX HEAD SMS | |
| 23 | 2061-001 | ZERO SL FRAME | |
| 24 | 2061-002 | ZERO SL MEETING RAIL | |
| 25 | 2061-005 | ZERO SL ADAPTOR | |

Approved as complying with the
Florida Building Code
Date Dec. 11, 2014
NOA# 14-0515.08
Miami Dade Product Control
By

Jorge E. Valdes
Fla. PE# 67398
C.A.N. 28565

LICENSED
No. 67398
NOV 21 2014
STATE OF FLORIDA
PROFESSIONAL ENGINEER

Miami Wall Systems, Inc.
701 West 25th Street
Hialeah, Florida. 33010
Phone:(305) 888-2300 Fax:(305) 888-3058

SERIES 101
ALUM. WINDOW WALL SYSTEM
(S.M.I.)

| NO. | DATE | REVISION |
|---|---|---|
| | | |

DATE: 10/21/2014
SCALE: AS NOTED
DWG. BY: O.J.L.
CHK. BY: JV
DWG NO.: 101-SMI
SHEET 9 OF 9