MIAMI-DADE COUNTY
PRODUCT CONTROL SECTION
11805 SW 26 Street, Room 208
Miami, Florida 33175-2474
T (786) 315-2590 F (786) 315-2599
www.miamidade.gov/economy

DEPARTMENT OF REGULATORY AND ECONOMIC RESOURCES (RER)
BOARD AND CODE ADMINISTRATION DIVISION

NOTICE OF ACCEPTANCE (NOA)

Miami Wall Systems, Inc.,
701 W. 25th Street,
Hialeah, Florida 33010

SCOPE:

This NOA is being issued under the applicable rules and regulations governing the use of construction materials. The documentation submitted has been reviewed and accepted by Miami-Dade County RER -Product Control Section to be used in Miami Dade County and other areas where allowed by the Authority Having Jurisdiction (AHJ).

This NOA shall not be valid after the expiration date stated below. The Miami-Dade County Product Control Section (In Miami Dade County) and/or the AHJ (in areas other than Miami Dade County) reserve the right to have this product or material tested for quality assurance purposes. If this product or material fails to perform in the accepted manner, the manufacturer will incur the expense of such testing and the AHJ may immediately revoke, modify, or suspend the use of such product or material within their jurisdiction. RER reserves the right to revoke this acceptance, if it is determined by Miami-Dade County Product Control Section that this product or material fails to meet the requirements of the applicable building code.

This product is approved as described herein, and has been designed to comply with the Florida Building Code, including the High Velocity Hurricane Zone.

DESCRIPTION: Series "113 " Aluminum Sliding Glass Doors w/wo reinforcements -SMI

APPROVAL DOCUMENT: Drawing No. **113-SM**, titled "Series 113 Alum Sliding Glass Door (S.M.I.)", sheets 1 through 11 of 11, dated 084-0-14 and last revised on April 16, 2015, prepared by manufacturer, signed and sealed by Jorge E. Valdes, P. E., bearing the Miami-Dade County Product Control Approval stamp with the Notice of Acceptance number and approval date by the Miami-Dade County Product Control Section.

MISSILE IMPACT RATING: Small Missile Impact

Limitations:

1. See Design Pressure (**DP**) charts: sizes Vs glass types (sheet **2**), interlock/astragal reinforcing and Head receptor options, in sheet **3**. See SGD door mullions (M1, M2 & M3) load capacity in sheet **4**. See Head and Sill anchor capacity charts in sheet **5**. Lower Design Pressure shall control from the charts, for entire assembly.
2. When SGD door jamb is mulled (mated) per sheet **4**, the mating mullion is integral part of the capacity with min sectional properties, as listed. Additional mating per series 101 Window wall is under separate approval, to be reviewed by Building official.
3. See Head Receptor option and installation, in sheet **7**. SGD units w/ Head receptor are limited to 122" span.
4. Min cluster of eight (8) anchors type A1, at sill end interlock/astragal at span > 120" & SGD w/Head receptor required.

LABELING: Each unit shall bear a permanent label with the manufacturer's name or logo, city, state and series and following statement: "Miami-Dade County Product Control Approved", noted herein.

RENEWAL of this NOA shall be considered after a renewal application has been filed and there has been no change in the applicable building code negatively affecting the performance of this product.

TERMINATION of this NOA will occur after the expiration date or if there has been a revision or change in the materials, use, and/or manufacture of the product or process. Misuse of this NOA as an endorsement of any product, for sales, advertising or any other purposes shall automatically terminate this NOA. Failure to comply with any section of this NOA shall be cause for termination and removal of NOA.

ADVERTISEMENT: The NOA number preceded by the words Miami-Dade County, Florida, and followed by the expiration date may be displayed in advertising literature. If any portion of the NOA is displayed, then it shall be done in its entirety.

INSPECTION: A copy of this entire NOA shall be provided to the user by the manufacturer or its distributors and shall be available for inspection at the job site at the request of the Building Official.

This NOA consists of this page 1 and evidence page E-1, as well as approval document mentioned above.

The submitted documentation was reviewed by **Ishaq I. Chanda, P.E.**

MIAMI-DADE COUNTY APPROVED

5/15/15

NOTICE OF ACCEPTANCE: EVIDENCE SUBMITTED

A. DRAWINGS

1. Manufacturer's die drawings and sections.
2. Drawing No. **113-SM**, titled "Series 113 Alum Sliding Glass Door (S.M.I.)", sheets 1 through 11 of 11, dated 084-0-14 and last revised on April 16, 2015, prepared by manufacturer, signed and sealed by Jorge E. Valdes, P.E.

B. TESTS

1. Test reports on:
   1) Air Infiltration Test, per FBC, TAS 202-94
   2) Uniform Static Air Pressure Test, Loading per FBC TAS 202-94
   3) Water Resistance Test, per FBC, TAS 202-94
   4) Small Missile Impact Test per FBC, TAS 201-94
   5) Cyclic Wind Pressure Loading per FBC, TAS 203-94
   6) Forced Entry Test, per FBC 2411 3.2.1, TAS 202-94

Along with installation diagram of sliding glass door w/wo head receptor and SGD mulled to Window wall, prepared by Fenestration Testing Lab. Inc., Test reports # **FTL 7806** (mock-ups # **E-1, F-1** and **G-1,** dated June 07, 2014, signed and sealed by Idalmis Ortega, P.E.
Note: The test report **#FTL 7086** has been revised pages 2, 30 & 86, dated 02/11/15, issued by Fenestration Testing Lab. Inc., signed and sealed by Idalmis Ortega, P.E.

2 Additional Referenced test report **FTL 7806** (mock-up **#C-1)** per TAS 201, 202, 203-LMI.

C. CALCULATIONS

1. Anchor verification calculations and structural analysis dated AUG 04, 2014 and last revised on APR 16, 2015, prepared, signed and sealed by Jorge E. Valdes, P.E.
2. Glazing complies w/ ASTME-1300-02 &-04

D. QUALITY ASSURANCE

1. Miami Dade Department of Regulatory and Economic Resources (RER).

E. MATERIAL CERTIFICATIONS

1. Notice of Acceptance No. **11-0624.01** issued to E.I. DuPont DeNemours & Co., Inc. for their **"DuPont Butacite ® PVB interlayer"**, expiring on 12/11/16.
2. Notice of Acceptance No. **14–0423.17** issued to **Eastman Chemical Company (MA)** for their **"Saflex Clear and Color Glass Interlayers"** dated 06/19/14, expiring on 05/21/16.
3. Technical data sheet of strength properties of "THE 74 Natural" flexible PVC, per ASMC-826, manufactured by HI-TECH extrusions.

F. STATEMENTS

1. Statement letter of conformance to FBC 2010 and letter of no financial interest both dated May 12th, 2015, prepared, signed and sealed by Jorge E. Valdes, P.E.
2. Lab compliance as part of the above referenced test reports.

G. OTHER

1. Test proposal # **14-0261** dated April 18, 2014, approved by RER.
2. SGD mullion mating parts # 101-409, 101-411, Steel reinforcement's items #13, #14 and steel bar ½"x5-1/2".

Ishaq I. Chanda

Ishaq I. Chanda, P.E.
Product Control Examiner
NOA No. 14-0515.10
Expiration Date: May 21, 2020
Approval Date: May 21, 2015

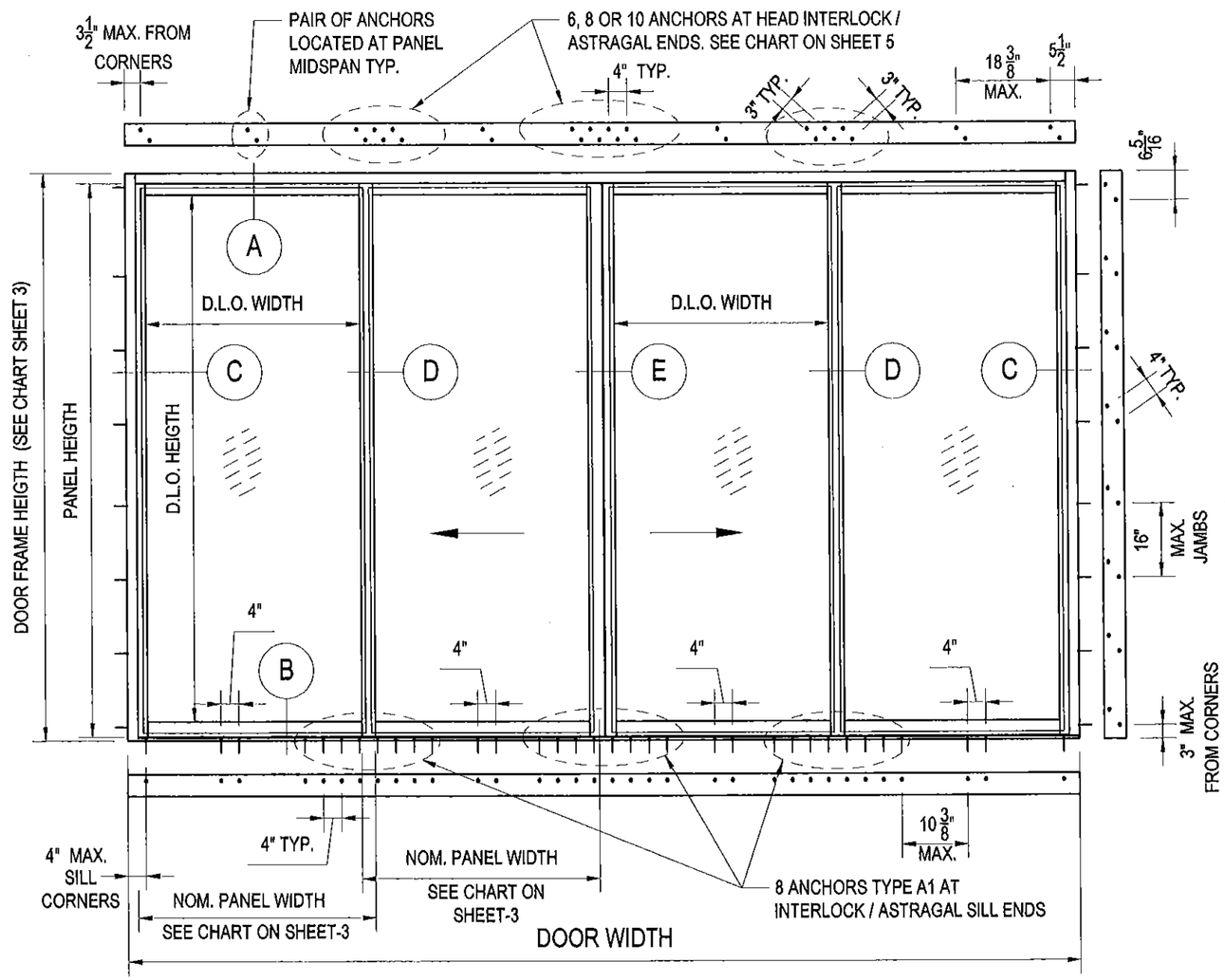

TYPICAL OXXO ELEVATION FOR STAND ALONE DOOR
(FOR DOOR MULLED TO WINDOW WALL SEE SHEET 4)
(FOR DOOR WITH HEAD RECEPTOR SEE SHEET 7)

SERIES 113
ALUMINUM SLIDING GLASS DOOR

THIS PRODUCT HAS BEEN DESIGNED & TESTED IN ACCORDANCE WITH THE 5TH EDITION (2010) FLORIDA BUILDING CODE (HIGH VELOCITY HURRICANE ZONE).

WOOD BUCKS BY OTHERS, MUST BE ENGINEERED SEPARATELY TO PROPERLY TRANSFER IMPOSED LOADS TO MAIN STRUCTURE.

ANCHORS SHALL BE LISTED, SPACED AS SHOWN ON DETAILS, ANCHORS EMBEDMENT TO BASE MATERIAL SHALL BE BEYOND WALL DRESSING OR STUCCO.

A LOAD DURATION INCREASE IS USED IN DESIGN OF ANCHORS INTO WOOD ONLY.

MATERIALS INCLUDING BUT NOT LIMITED TO STEEL/METAL SCREWS, THAT COME INTO CONTACT WITH OTHER DISSIMILAR MATERIALS SHALL MEET THE REQUIREMENTS OF THE FLORIDA BLDG. CODE SECTION 2003.8.4.

INDEX

DESCRIPTION	PAGE
- TYPICAL ELEVATION	1
- APPROVED CONFIGURATIONS & GLAZING DETAILS	2
- GLASS & VERTICAL STILES LOAD CHARTS	3
- LOAD CHART FOR DOOR MULLED TO WINDOW WALL	4
- HEAD AND SILL ANCHOR CAPACITY CHART	5
- VERTICAL CROSS SECTIONS FOR DOORS WITHOUT HEAD RECEPTOR & FASTENER TYPES.	6
- VERTICAL CROSS SECTION FOR DOORS WITH HEAD RECEPTORS	7
- HORIZONTAL CROSS SECTIONS	8 THRU 9
- EXTRUSION DETAILS	10
- BILL OF MATERIALS	11

THESE DOORS ARE RATED FOR SMALL MISSILE IMPACT. SHUTTERS ARE NOT REQUIRED.

Approved as complying with the Florida Building Code
Date MAY 21, 2015
NOA# 14-0515.10
Miami Dade Product Control
By [signature]

LEGEND

D.L.O. HEIGHT = PANEL HEIGHT - $8\frac{7}{8}$"
D.L.O. WIDTH = PANEL WIDTH - 6.25"
PANEL HEIGHT= FRAME HEIGHT - $2\frac{3}{8}$"

INSTRUCTIONS

USE CHART AS FOLLOWS:
STEP 1: DETERMINE DESIGN WIND LOAD USING APPLICABLE ASCE 7 STANDARD.
STEP 2: SEE CHARTS ON SHEET 3 FOR DESIGN LOAD CAPACITY OF DESIRED GLASS SIZE & REQUIRED STILE TYPES, REINFORCING & LIMITATIONS FOR USE OF HEAD RECEPTOR.
STEP 3: IF DOOR IS TO BE MULLED TO WINDOW WALL (UNDER SEPARATE NOA), CHECK MULLIONS CAPACITY FOR GIVEN TRIBUTARY WIDTH AND HEIGHT USING CHARTS ON SHEET 4. THE CAPACITY SHOULD EXCEED THE DESIGN LOAD. LOWER DESIGN PRESSURE FOR SGD, DOOR MULLION OR WINDOW WALL SHALL CONTROL FOR ENTIRE ASSEMBLY.
STEP 4: SELECT HEAD / SILL ANCHOR OPTION ON SHEET 5 . THE CAPACITY SHOULD EXCEED THE DESIGN LOAD FROM STEP 3.

Jorge E. Valdes
Fla. Reg. No. 67308
CA No. 28305

JORGE E. VALDES LICENSE No 67308 APR 16 2015 STATE OF FLORIDA PROFESSIONAL ENGINEER

Miami Wall Systems, Inc.
701 West 25th Street
Hialeah, Florida. 33010
Phone:(305) 888-2300 Fax:(305) 888-3058

SERIES 113
ALUM. SLIDING GLASS DOOR
(S.M.I.)

NO.	DATE	REVISION

DATE: 7/30/2014
SCALE: AS NOTED
DWG. BY: O.J.L.
CHK. BY: JV
DWG NO.: 113-SM
SHEET 1 OF 11

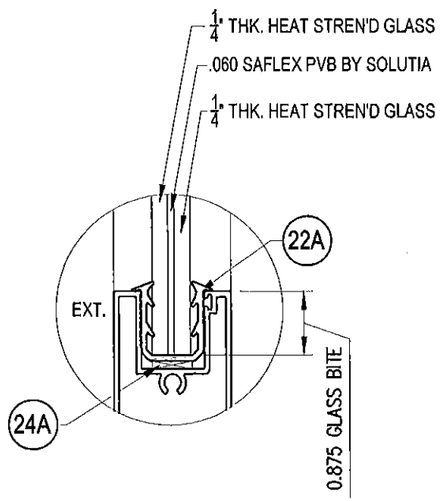

GLASS TYPE "GL-1"

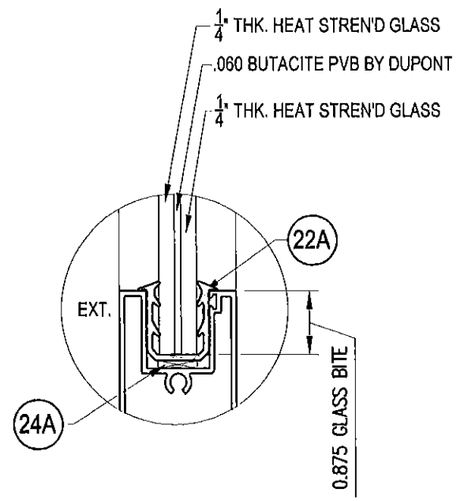

GLASS TYPE "GL-2"

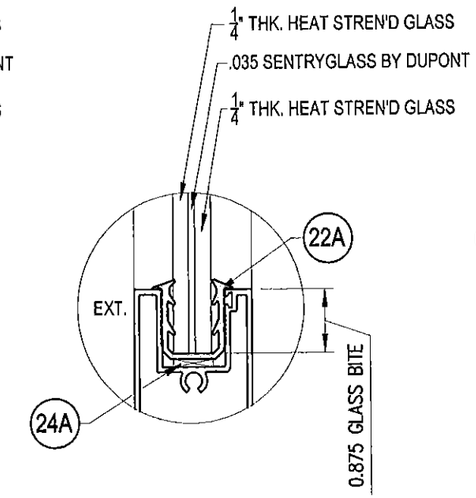

GLASS TYPE "GL-3"

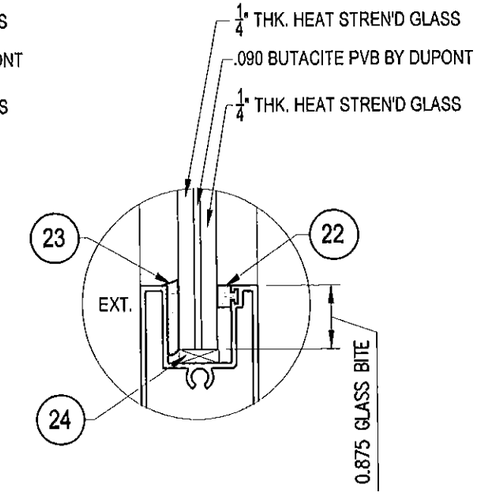

GLASS TYPE "GL-4"

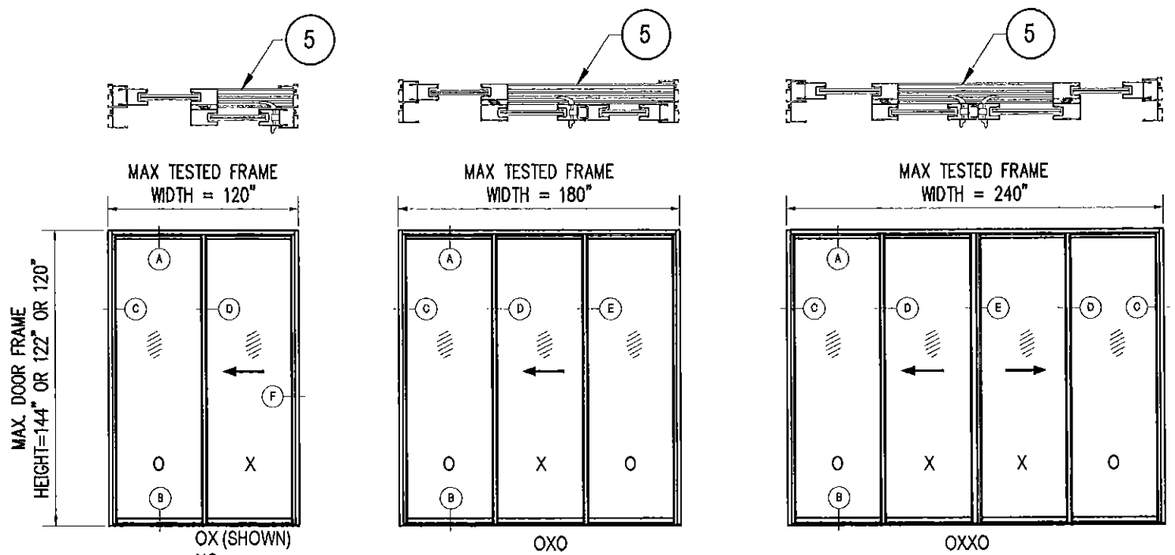

APPROVED CONFIGURATIONS
(2 TRACKS, 4 PANEL OR LESS)

CONFIGURATIONS SHOWN FOR ILLUSTRATION PURPOSES ONLY
SEE SHEETS 6, 7 & 8 FOR FRAME ANCHOR INSTALLATIONS

Approved as complying with the
Florida Building Code
Date 5/21/15
NOA# 14-0515.10
Miami Dade Product Control
By Ishq J. Chand

Jorge E. Valdes
Fla. PE# 67399
C.A.# 28665

JORGE E. VALDES
LICENSE
No 67399
APR 16 2015
STATE OF FLORIDA
PROFESSIONAL ENGINEER

Miami Wall Systems, Inc.
701 West 25th Street
Hialeah, Florida. 33010
Phone:(305) 888-2300 Fax:(305) 888-3058

SERIES 113
ALUM. SLIDING GLASS DOOR
(S.M.I.)

NO.	DATE	REVISION

DATE: 7/30/2014
SCALE: AS NOTED
DWG. BY: O.J.L.
CHK. BY: JV
DWG NO.: 113-SM
SHEET 2 OF 11

CHART "A"

DESIGN LOAD CAPACITY - PSF
DOORS WITH OR WITHOUT HEAD RECEPTOR
STANDARD INTERLOCK AND ASTRAGAL

PANEL WIDTH NOMINAL INCHES	DOOR FRAME HEIGHT INCHES	GLASS TYPE "GL-1"		GLASS TYPE "GL-2" & "GL-3"	
		EXT. (+)	INT. (-)	EXT. (+)	INT. (-)
30	84	80.0	80.0	80.0	95.0
36		80.0	80.0	80.0	95.0
42		80.0	80.0	80.0	95.0
48		80.0	80.0	80.0	95.0
54		75.5	75.5	80.0	92.0
60		68.0	68.0	80.0	83.0
30	90	80.0	80.0	80.0	95.0
36		80.0	80.0	80.0	95.0
42		80.0	80.0	80.0	95.0
48		80.0	80.0	80.0	95.0
54		75.5	75.5	80.0	92.0
60		68.0	68.0	80.0	83.0
30	96	80.0	80.0	80.0	95.0
36		80.0	80.0	80.0	95.0
42		80.0	80.0	80.0	95.0
48		80.0	80.0	80.0	95.0
54		75.5	75.5	80.0	92.0
60		68.0	68.0	80.0	83.0
30	102	80.0	80.0	80.0	95.0
36		80.0	80.0	80.0	95.0
42		80.0	80.0	80.0	95.0
48		80.0	80.0	80.0	95.0
54		75.5	75.5	80.0	92.0
60		68.0	68.0	80.0	83.0
30	108	80.0	80.0	80.0	95.0
36		80.0	80.0	80.0	95.0
42		80.0	80.0	80.0	95.0
48		80.0	80.0	80.0	95.0
54		75.5	75.5	80.0	92.0
60		68.0	68.0	80.0	83.0
30	114	80.0	80.0	80.0	95.0
36		80.0	80.0	80.0	95.0
42		80.0	80.0	80.0	95.0
48		80.0	80.0	80.0	95.0
54		75.5	75.5	80.0	92.0
60		68.0	68.0	80.0	83.0
30	120	80.0	80.0	80.0	95.0
36		80.0	80.0	80.0	95.0
42		80.0	80.0	80.0	95.0
48		80.0	80.0	80.0	95.0
51		80.0	80.0	80.0	95.0
54		75.5	75.5	80.0	92.0
60		68.0	68.0	80.0	83.0

CHART "B"

DESIGN LOAD CAPACITY - PSF
DOORS WITH OR WITHOUT HEAD RECEPTOR
HEAVY DUTY INTERIOR REINFORCED
INTERLOCK AND ASTRAGAL

PANEL WIDTH NOMINAL INCHES	DOOR FRAME HEIGHT INCHES	GLASS TYPE "GL-2" & "GL-3"	
		EXT. (+)	INT. (-)
30	84	130.0	130.0
36		130.0	130.0
42		130.0	130.0
48		130.0	130.0
54		122.7	122.7
60		110.5	110.5
30	90	130.0	130.0
36		130.0	130.0
42		130.0	130.0
48		130.0	130.0
54		122.7	122.7
60		110.5	110.5
30	96	130.0	130.0
36		130.0	130.0
42		130.0	130.0
48		130.0	130.0
54		122.7	122.7
60		110.5	110.5
30	102	130.0	130.0
36		130.0	130.0
42		130.0	130.0
48		130.0	130.0
54		122.7	122.7
60		110.5	110.5
30	108	130.0	130.0
36		130.0	130.0
42		130.0	130.0
48		130.0	130.0
54		122.7	122.7
60		110.5	110.5
30	114	130.0	130.0
36		130.0	130.0
42		130.0	130.0
48		130.0	130.0
54		122.7	122.7
60		110.5	110.5
30	122	130.0	130.0
36		130.0	130.0
42		130.0	130.0
48		130.0	130.0
51		130.0	130.0
54		122.7	122.7
60		110.5	110.5

CHART "C"

DESIGN LOAD CAPACITY - PSF
HEAVY INTERLOCK AND ASTRAGAL
W/REINFORCEMENTS

PANEL WIDTH NOMINAL INCHES	DOOR FRAME HEIGHT INCHES	GLASS TYPE "GL-4"	
		EXT. (+)	INT. (-)
30	108	130.0	130.0
36		130.0	130.0
42		130.0	130.0
48		130.0	130.0
54		122.0	122.0
60		110.0	110.0
30	114	130.0	130.0
36		130.0	130.0
42		130.0	130.0
48		130.0	130.0
54		122.0	122.0
60		110.0	110.0
30	122	130.0	130.0
36		130.0	130.0
42		130.0	130.0
48		130.0	130.0
54		122.0	122.0
60		110.0	110.0
30	126	130.0	130.0
36		130.0	130.0
42		130.0	130.0
48		130.0	130.0
54		119.0	119.0
57		112.0	112.0
30	132	130.0	130.0
36		130.0	130.0
42		130.0	130.0
48		130.0	130.0
54		115.0	115.0
30	138	130.0	130.0
36		130.0	130.0
42		130.0	130.0
48		130.0	130.0
51		120.0	120.0
53-1/4		114.0	114.0
30	144	130.0	130.0
36		130.0	130.0
42		130.0	130.0
48		130.0	130.0
51		118.0	118.0

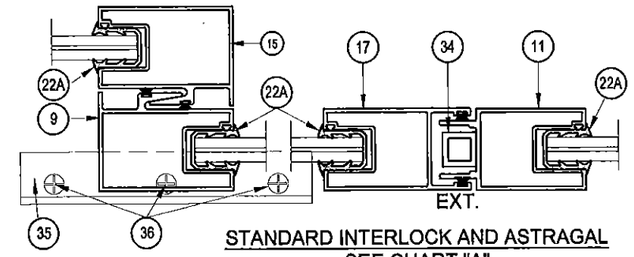

STANDARD INTERLOCK AND ASTRAGAL
SEE CHART "A"

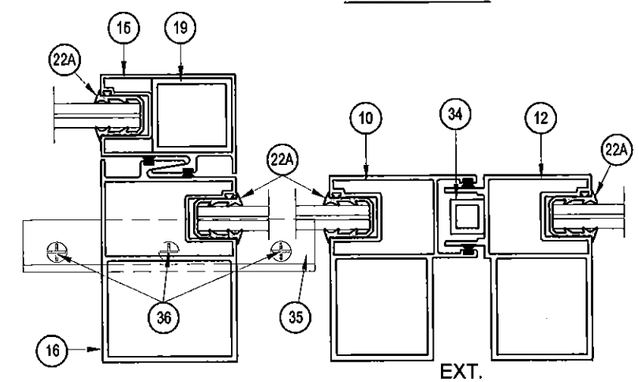

HEAVY DUTY INTERLOCK AND ASTRAGAL
SEE CHART "B"

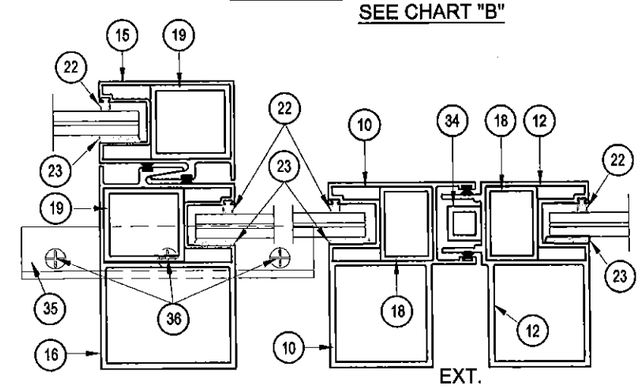

HEAVY DUTY INTERLOCK AND ASTRAGAL
WITH REINFORCING
SEE CHART "C"

NOTE:
GLASS CAPACITIES ON THIS SHEET ARE BASED ON ASTM E1300-12 (3 SEC. GUSTS)
AND FLORIDA BUILDING COMMISSION DECLARATORY STATEMENT DCA05-DEC-219

Approved as complying with the
Florida Building Code
Date 5/21/15
NOA# 14-0515.10
Miami Dade Product Control
By Isheng J. Chaunt

JORGE L. VALDES
LICENSE
No 67398
APR 16 2015
STATE OF
FLORIDA
PROFESSIONAL ENGINEER

Miami Wall Systems, Inc.
701 West 25th Street
Hialeah, Florida. 33010
Phone:(305) 888-2300 Fax:(305) 888-3058

SERIES 113
ALUM. SLIDING GLASS DOOR
(S.M.I.)

REVISION	NO.	DATE

DATE: 7/30/2014
SCALE: AS NOTED
DWG. BY: O.J.L.
CHK. BY: JV
DWG NO.: 113-SM
SHEET 3 OF 11

DOOR MULLION DESIGN LOAD CAPACITY - PSF							
TRIBUTARY WIDTH (W) NOMINAL INCHES	FRAME HEIGHT INCHES	DOOR MULLION 'M1'		DOOR MULLION 'M2'		DOOR MULLION 'M3'	
		EXT. (+)	INT (-)	EXT. (+)	INT (-)	EXT. (+)	INT (-)
30	96	95.0	95.0	130.0	130.0	130.0	130.0
36		95.0	95.0	130.0	130.0	130.0	130.0
42		95.0	95.0	130.0	130.0	130.0	130.0
48		95.0	95.0	130.0	130.0	130.0	130.0
56		95.0	95.0	130.0	130.0	130.0	130.0
58						130.0	130.0
30	102	95.0	95.0	130.0	130.0	130.0	130.0
36		95.0	95.0	130.0	130.0	130.0	130.0
42		95.0	95.0	130.0	130.0	130.0	130.0
48		95.0	95.0	130.0	130.0	130.0	130.0
56		95.0	95.0	130.0	130.0	130.0	130.0
58						130.0	130.0
30	108	95.0	95.0	130.0	130.0	130.0	130.0
36		95.0	95.0	130.0	130.0	130.0	130.0
42		95.0	95.0	130.0	130.0	130.0	130.0
48		95.0	95.0	130.0	130.0	130.0	130.0
56		95.0	95.0	130.0	130.0	130.0	130.0
58						130.0	130.0
30	114	95.0	95.0	130.0	130.0	130.0	130.0
36		95.0	95.0	130.0	130.0	130.0	130.0
42		95.0	95.0	130.0	130.0	130.0	130.0
48		95.0	95.0	130.0	130.0	130.0	130.0
56		95.0	95.0	125.0	125.0	130.0	130.0
58						130.0	130.0
30	120	95.0	95.0	130.0	130.0	130.0	130.0
36		95.0	95.0	130.0	130.0	130.0	130.0
42		95.0	95.0	130.0	130.0	130.0	130.0
48		95.0	95.0	126.0	126.0	130.0	130.0
56		95.0	95.0	111.0	111.0	130.0	130.0
58						130.0	130.0
30	122			130.0	130.0	130.0	130.0
36				130.0	130.0	130.0	130.0
42				130.0	130.0	130.0	130.0
48				123.0	123.0	130.0	130.0
56				107.0	107.0	130.0	130.0
58						130.0	130.0
30	126	-	-	-	-	130.0	130.0
36		-	-	-	-	130.0	130.0
42		-	-	-	-	130.0	130.0
48		-	-	-	-	130.0	130.0
54		-	-	-	-	130.0	130.0
57		-	-	-	-	130.0	130.0
30	132	-	-	-	-	130.0	130.0
36		-	-	-	-	130.0	130.0
42		-	-	-	-	130.0	130.0
48		-	-	-	-	130.0	130.0
54		-	-	-	-	130.0	130.0
30	138	-	-	-	-	130.0	130.0
36		-	-	-	-	130.0	130.0
42		-	-	-	-	130.0	130.0
48		-	-	-	-	130.0	130.0
51		-	-	-	-	130.0	130.0
53-1/4		-	-	-	-	130.0	130.0
30	144	-	-	-	-	130.0	130.0
36		-	-	-	-	130.0	130.0
42		-	-	-	-	130.0	130.0
48		-	-	-	-	130.0	130.0
51		-	-	-	-	130.0	130.0

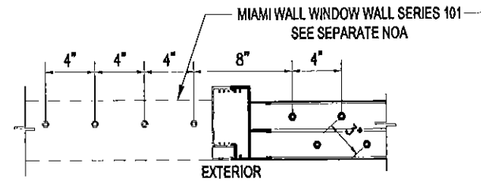

(I) CLUSTER OF (8) TYPES A OR B1 FASTENERS AT HEAD (DOOR MULLION M1 SHOWN)

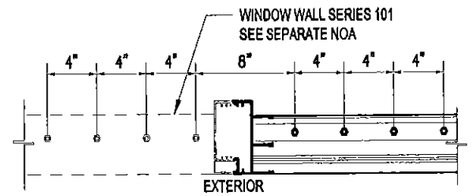

(II) CLUSTER OF (8) TYPE A1 FASTENERS AT SILL (DOOR MULLION M1 SHOWN)

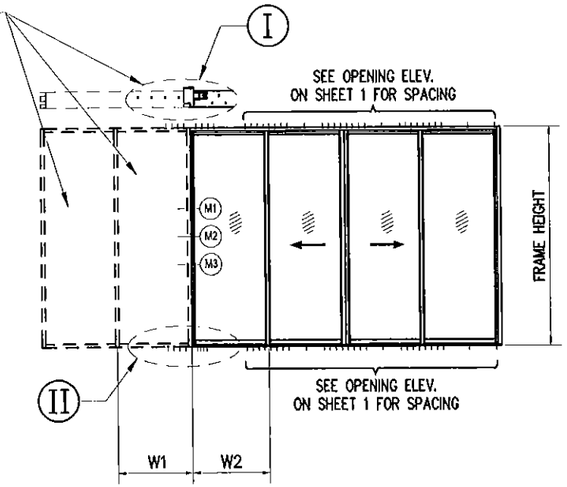

$$\text{WIDTH (W)} = \frac{W1 + W2}{2}$$

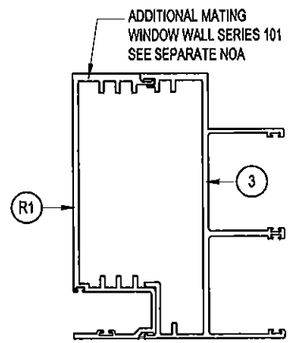

DOOR MULLION 'M1'

MIN. REQUIRED

I_{xal} =14.3479 in^4

S_{xal} =4.831 in^3

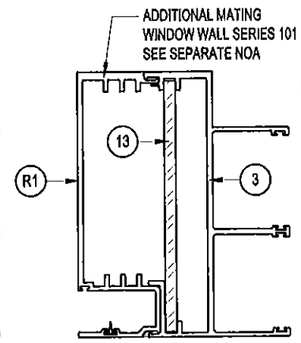

LIGHT REINFORCED DOOR MULLION 'M2'

MIN. REQUIRED

I_{xal} =14.3479 in^4

S_{xal} =4.831 in^3

I_{xstl} =3.466 in^4

S_{xstl} =1.2604 in^3

$I_x(Total)_a$ =24.4 in^4

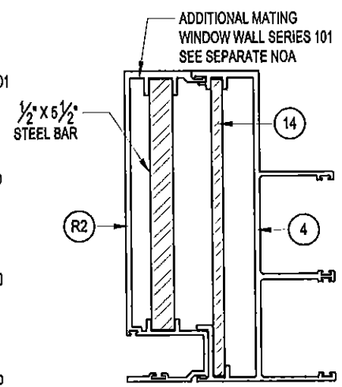

HEAVY REINFORCED DOOR MULLION 'M3'

MIN. REQUIRED

I_{xal} =20.3195 in^4

S_{xal} =5.689 in^3

$I_{stl_{1+2}}$ =12.6336 in^4

$S_{xtl_{1+2}}$ =3.893 in^3

$I_x(Total)_a$ =57.006 in^4

ABBREVIATIONS

al = ALUMINUM

stl = STEEL

TOTAL=TRANSFORMED ALUMINUM EFFECTIVE INERTIA

NOTE:
WHEN SLIDING GLASS DOOR (SGD) IS MULLED, LOWER DESIGN PRESSURE CAPACITY FOR SGD OR DOOR MULLION OR SEPARATE WINDOW WALL SYSTEM SHALL CONTROL THE ENTIRE ASSEMBLY

Approved as complying with the Florida Building Code
Date 5/21/15
NOA# 14-0515.10
Miami Dade Product Control
By Ishaq I. Chaudhry

Jorge E. Valdes
Fla. PE# 67398
Fla. Lic. 8585

JORGE E. VALDES
LICENSE
No 67398
APR 16 2015
STATE OF FLORIDA
PROFESSIONAL ENGINEER

Miami Wall Systems, Inc.
701 West 25th Street
Hialeah, Florida. 33010
Phone:(305) 888-2300 Fax:(305) 888-3058

SERIES 113
ALUM. SLIDING GLASS DOOR
(S.M.I.)

NO.	DATE	REVISION

DATE: 7/30/2014
SCALE: AS NOTED
DWG. BY: O.J.L.
CHK. BY: JV
DWG NO.: 113-SM
SHEET 4 OF 11

CHART "D"

HEAD ANCHOR LOAD CAPACITY - PSF							
PANEL WIDTH NOMINAL INCHES	DOOR HEIGHT INCHES	ANCHOR TYPE "A", "B" (Ø 1/4)			ANCHOR TYPE "A1", "B1" (Ø 5/16)		
		6 ANCHORS AT MTG. STILE ENDS	8 ANCHORS AT MTG. STILE ENDS	10 ANCHORS AT MTG. STILE ENDS	6 ANCHORS AT MTG. STILE ENDS	8 ANCHORS AT MTG. STILE ENDS	10 ANCHORS AT MTG. STILE ENDS
		EXT. (+) INT (-)	EXT. (+) INT (-)	EXT. (+) INT (-)	EXT. (+) INT (-)	EXT. (+) INT (-)	EXT. (+) INT (-)
30	96	95.0	130.0	130.0	95.0	130.0	130.0
36		95.0	130.0	130.0	95.0	130.0	130.0
42		95.0	130.0	130.0	95.0	130.0	130.0
48		95.0	129.3	130.0	95.0	130.0	130.0
54		90.0	120.0	130.0	95.0	130.0	130.0
60		84.7	112.9	130.0	95.0	130.0	130.0
30	102	95.0	130.0	130.0	95.0	130.0	130.0
36		95.0	130.0	130.0	95.0	130.0	130.0
42		95.0	130.0	130.0	95.0	130.0	130.0
48		89.5	119.4	130.0	95.0	130.0	130.0
54		82.8	110.4	130.0	95.0	130.0	130.0
60		77.6	103.5	129.3	95.0	130.0	130.0
30	108	95.0	130.0	130.0	95.0	130.0	130.0
36		95.0	130.0	130.0	95.0	130.0	130.0
42		91.7	122.3	130.0	95.0	130.0	130.0
48		83.1	110.9	130.0	95.0	130.0	130.0
54		76.6	102.2	127.7	95.0	130.0	130.0
60		71.6	95.5	119.4	95.0	130.0	130.0
30	114	95.0	130.0	130.0	95.0	130.0	130.0
36		95.0	129.3	130.0	95.0	130.0	130.0
42		85.8	114.4	130.0	95.0	130.0	130.0
48		77.6	103.5	129.3	95.0	130.0	130.0
54		71.4	95.1	118.9	95.0	130.0	130.0
60		66.5	88.7	110.9	95.0	130.0	130.0
30	120	95.0	130.0	130.0	95.0	130.0	130.0
36		91.3	121.7	130.0	95.0	130.0	130.0
42		80.6	107.5	130.0	95.0	130.0	130.0
48		72.8	97.0	121.3	95.0	130.0	130.0
54		66.8	89.0	111.3	95.0	130.0	130.0
60		62.1	82.8	103.5	95.0	130.0	130.0
30	126		130.0	130.0		130.0	130.0
36			115.0	130.0		130.0	130.0
42			101.4	126.7		130.0	130.0
48			91.3	114.1		130.0	130.0
54			83.6	104.5		130.0	130.0
60			77.6	97.0		130.0	130.0
30	132		127.3	130.0		130.0	130.0
36			108.9	130.0		130.0	130.0
42			95.9	119.8		130.0	130.0
48			86.2	107.8		130.0	130.0
54			78.8	98.5		130.0	130.0
60			73.0	91.3		130.0	130.0
30	138		121.1	130.0		130.0	130.0
36			103.5	129.3		130.0	130.0
42			91.0	113.7		130.0	130.0
48			81.7	102.1		130.0	130.0
54			74.6	93.2		130.0	130.0
60			69.0	86.2		130.0	130.0
30	144		115.5	130.0		130.0	130.0
36			98.5	123.2		130.0	130.0
42			86.5	108.2		130.0	130.0
48			77.6	97.0		130.0	130.0
54			70.7	88.4		130.0	130.0
60			65.3	81.7		126.4	130.0

NOTE:
ANCHOR CAPACITY CHARTS ARE TO BE USED IN CONJUNCTION WITH CHARTS SHEET 3 AND SHEET 4. LOWER DESIGN PRESSURES FROM THE CHART SHALL CONTROL THE ENTIRE ASSEMBLY

CHART "E"

SILL ANCHOR LOAD CAPACITY - PSF				
PANEL WIDTH NOMINAL INCHES	DOOR HEIGHT INCHES	ANCHOR TYPE "A1" (Ø5/16)		
		6 ANCHORS AT MTG. STILE ENDS	8 ANCHORS AT MTG. STILE ENDS	10 ANCHORS AT MTG. STILE ENDS
		EXT. (+) INT (-)	EXT. (+) INT (-)	EXT. (+) INT (-)
30	96	95.0	130.0	130.0
36		95.0	130.0	130.0
42		95.0	130.0	130.0
48		95.0	130.0	130.0
54		95.0	130.0	130.0
60		95.0	130.0	130.0
30	102	95.0	130.0	130.0
36		95.0	130.0	130.0
42		95.0	130.0	130.0
48		95.0	130.0	130.0
54		95.0	130.0	130.0
60		95.0	130.0	130.0
30	108	95.0	130.0	130.0
36		95.0	130.0	130.0
42		95.0	130.0	130.0
48		95.0	130.0	130.0
54		95.0	130.0	130.0
60		95.0	130.0	130.0
30	114	95.0	130.0	130.0
36		95.0	130.0	130.0
42		95.0	130.0	130.0
48		95.0	130.0	130.0
54		95.0	130.0	130.0
60		95.0	130.0	130.0
30	120	95.0	130.0	130.0
36		95.0	130.0	130.0
42		95.0	130.0	130.0
48		95.0	130.0	130.0
54		95.0	130.0	130.0
60		95.0	130.0	130.0
30	126		130.0	130.0
36			130.0	130.0
42			130.0	130.0
48			130.0	130.0
54			130.0	130.0
60			130.0	130.0
30	132		130.0	130.0
36			130.0	130.0
42			130.0	130.0
48			130.0	130.0
54			130.0	130.0
60			130.0	130.0
30	138		130.0	130.0
36			130.0	130.0
42			130.0	130.0
48			130.0	130.0
54			130.0	130.0
60			130.0	130.0
30	144		130.0	130.0
36			130.0	130.0
42			130.0	130.0
48			130.0	130.0
54			130.0	130.0
60			126.4	130.0

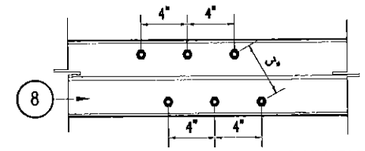

CLUSTER OF (6) FASTENERS AT HEAD
(INTERLOCK / ASTRAGAL SEE CHART D)

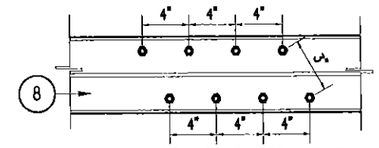

CLUSTER OF (8) FASTENERS AT HEAD
(INTERLOCK / ASTRAGAL. SEE CHART D)

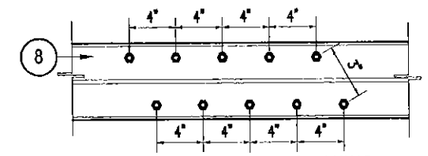

CLUSTER OF (10) FASTENERS AT HEAD
(INTERLOCK / ASTRAGAL. SEE CHART D)

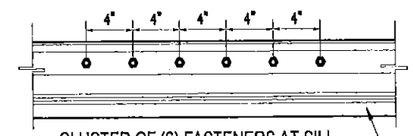

CLUSTER OF (6) FASTENERS AT SILL
(INTERLOCK / ASTRAGAL. SEE CHART E) 1 OR 2

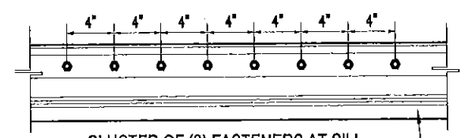

CLUSTER OF (8) FASTENERS AT SILL
(INTERLOCK / ASTRAGAL. SEE CHART E) 1 OR 2

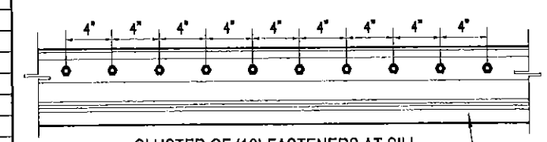

CLUSTER OF (10) FASTENERS AT SILL
(INTERLOCK / ASTRAGAL. SEE CHART E) 1 OR 2

Approved as complying with the Florida Building Code
Date 5/21/15
NOA# 14-0515.10
Miami Dade Product Control
By Ishaq I. Chanda

Jorge E. Valdes
Fla. PE# 67398
Fla. Lic. 28569

JORGE E. VALDES
LICENSE
No 67398
APR 16 2015
STATE OF FLORIDA
PROFESSIONAL ENGINEER

Miami Wall Systems, Inc.
701 West 25th Street
Hialeah, Florida. 33010
Phone:(305) 888-2300 Fax:(305) 888-3058

SERIES 113
ALUM. SLIDING GLASS DOOR
(S.M.I.)

REVISION		
NO.	DATE	

DATE: 7/30/2014
SCALE: AS NOTED
DWG. BY: O.J.L.
CHK. BY: JV
DWG NO.: 113-SM
SHEET 5 OF 11

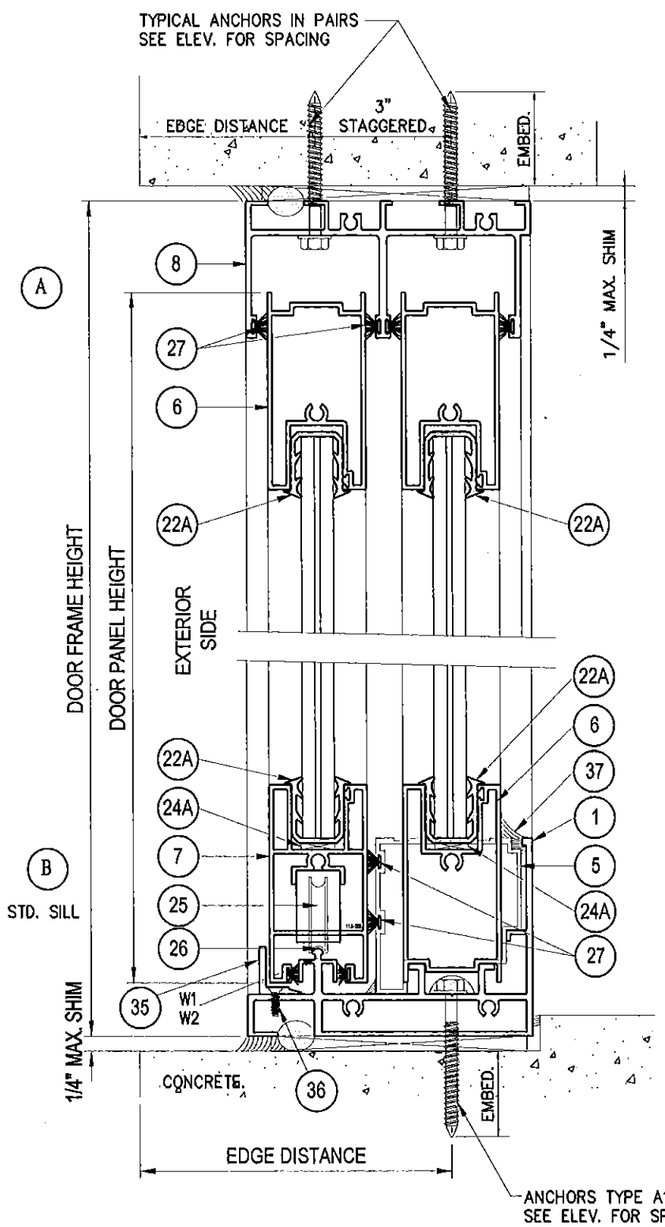

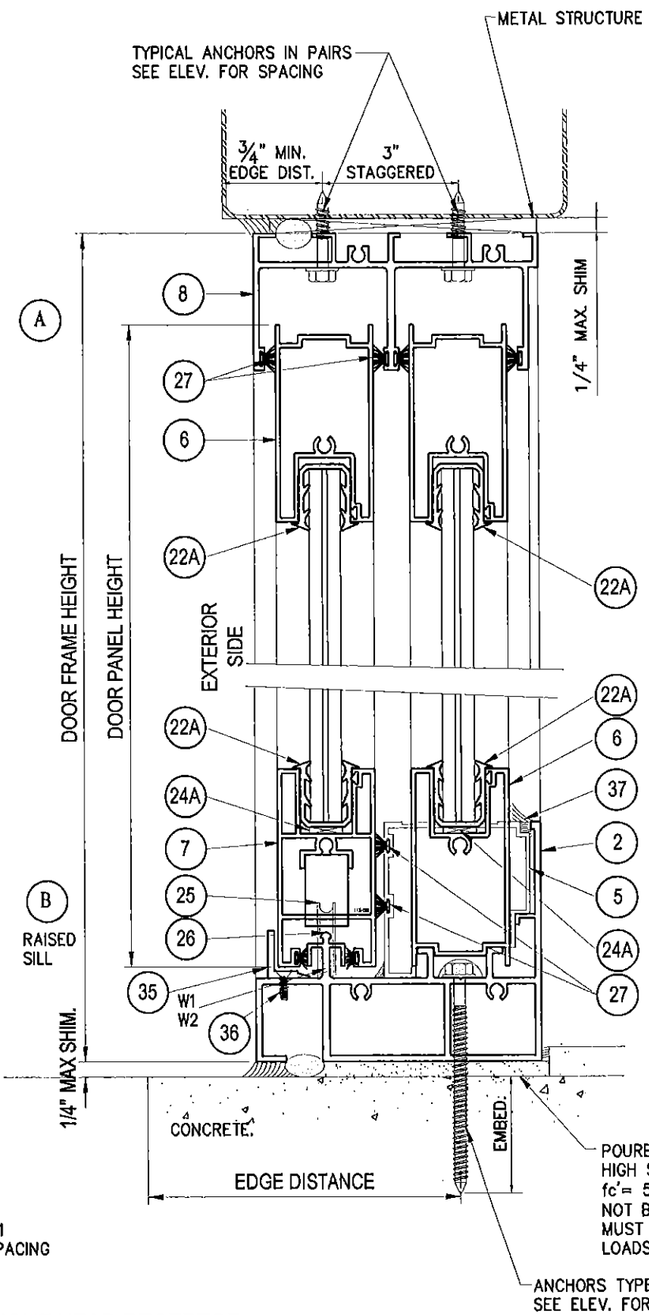

DOORS WITHOUT HEAD RECEPTOR

TYPICAL ANCHORS: SEE ELEV. FOR SPACING

AT HEAD

TYPE. "A": 1/4" DIA. ULTRACON BY "ELCO" (Fu=177 KSI, Fy=155 KSI)
DIRECTLY INTO CONCRETE WITH 1-3/4" MIN. EMBED, fc'=3000 psi

TYPE. "A1": 5/16" DIA. ULTRACON BY "ELCO" (Fu=177 KSI, Fy=155 KSI)
DIRECTLY INTO CONCRETE WITH 2" MIN. EMBED, fc'=3515 psi

TYPE. "B": 1/4" DIA. DRILL FLEX OR SELF DRILLING SCREWS (Fu=92 KSI, Fy=120 KSI)
TYPE. "B1": 5/16" DIA. DRILL FLEX OR SELF DRILLING SCREWS (Fu=92 KSI, Fy=120 KSI)
INTO METAL STRUCTURES OR APPROVED MULLIONS
STEEL: 1/8" THICK MIN. (Fy = 36 KSI MIN.)
ALUMINUM: 1/8" THICK MIN. (6063-T5 MIN.)
(STEEL IN CONTACT WITH ALUMINUM TO BE PLATED OR PAINTED)

SEE CHART ON SHEET 5 FOR CLUSTERS AT HEAD

AT SILL

TYPE. "A1": 5/16" DIA. ULTRACON BY "ELCO" (Fu=177 KSI, Fy=155 KSI)
DIRECTLY INTO CONCRETE WITH 2" MIN. EMBED, fc'=3515 psi

AT JAMBS

1/4" DIA. ULTRACON BY "ELCO" (Fu=177 KSI, Fy=155 KSI)
THRU 1BY BUCKS, 1-3/4" MIN. CONC. OR MASONRY EMBEDMENT
INTO 2BY WOOD BUCKS, 1-3/8" MIN. WOOD EMBEDMENT
DIRECTLY INTO CONCRETE OR MASONRY WITH 1-3/4" MIN. EMBED

1/4" DIA. DRILL FLEX OR SELF DRILLING SCREWS (Fu=92 KSI, Fy=120 KSI)
INTO METAL STRUCTURES OR APPROVED MULLIONS
STEEL: 1/8" THICK MIN. (Fy = 36 KSI MIN.)
ALUMINUM: 1/8" THICK MIN. (6063-T5 MIN.)
(STEEL IN CONTACT WITH ALUMINUM TO BE PLATED OR PAINTED)

TYPICAL EDGE DISTANCE
INTO CONCRETE = 2-1/2" MIN. FOR 1/4" DIA. ANCHORS
= 3-1/8" MIN. FOR 5/16" DIA. ANCHORS
INTO WOOD STRUCTURE = 1-1/2" MIN.
INTO METAL STRUCTURE = 3/4" MIN.

CONCRETE AT HEAD, SILL OR JAMBS fc' = 3000 PSI MIN.
C-90 HOLLOW/FILLED BLOCK AT JAMBS fm' = 2000 PSI MIN.

SEALANTS:

ALL FRAME AND PANEL JOINT, INSTALLATION SCREWS AND HEADS OF ANCHOR SCREWS AT SILL TO BE SEALED WITH BLACK/ALUM COLORED SILICONE.

WEEP HOLES:

W1=3/16" X 1" WEEP SLOTS AT 8" FROM ENDS
W2=1/4" X 2" WEEP SLOTS AT 8" FROM ENDS

Approved as complying with the Florida Building Code
Date 5/21/15
NOA# 14-0515.10
Miami Dade Product Control
By Ishwar J. Chauhan

Jorge E. Valdes
Florida Reg. No. 67398
JORGE E. VALDES LICENSE No 67398 STATE OF FLORIDA PROFESSIONAL ENGINEER
APR 16 2015

Miami Wall Systems, Inc.
701 West 25th Street
Hialeah, Florida. 33010
Phone:(305) 888-2300 Fax:(305) 888-3058

SERIES 113
ALUM. SLIDING GLASS DOOR
(S.M.I.)

REVISION	NO.	DATE

DATE: 7/30/2014
SCALE: AS NOTED
DWG. BY: O.J.L.
CHK. BY: JV
DWG NO.: 113-SM
SHEET 6 OF 11

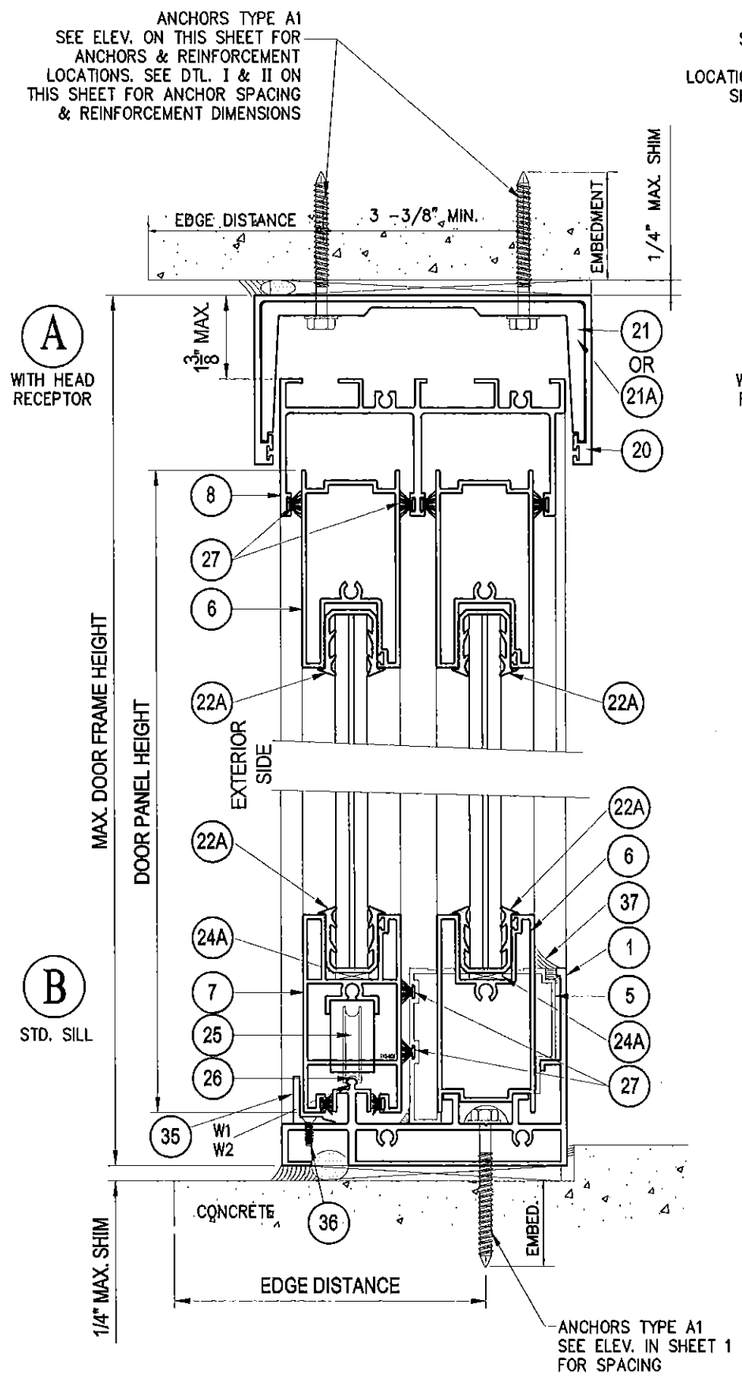

MAX. DOOR FRAME HEIGHT = 122" WITH HEAD RECEPTOR

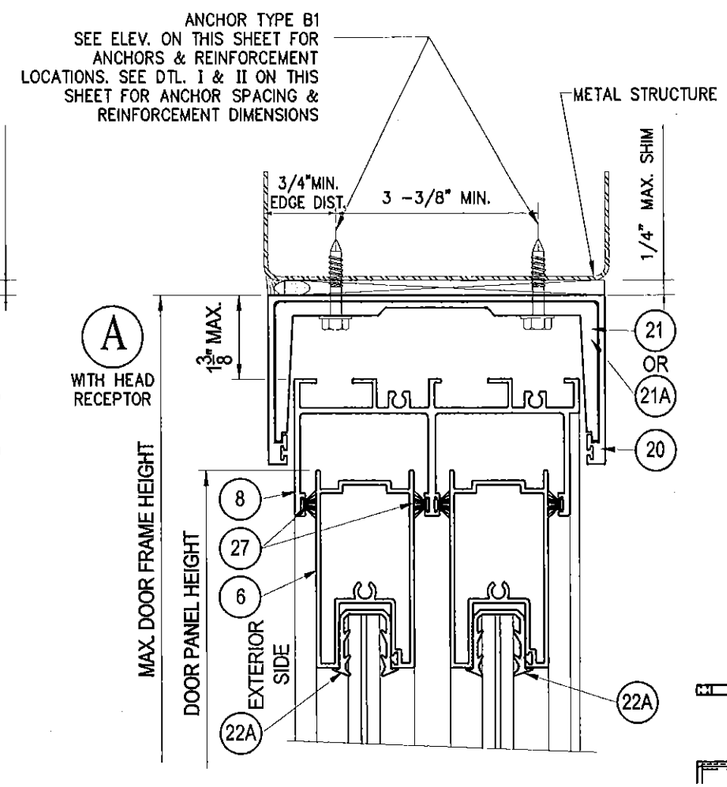

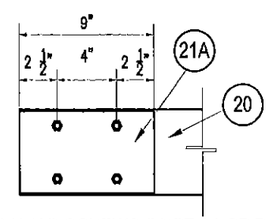

(I) (4) HEAD SCREWS (TYPE A1 OR B1) CLUSTER DETAIL AT HEAD RECEPTOR JAMB ENDS

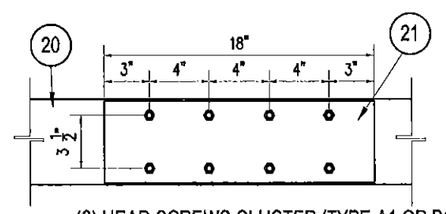

(II) (8) HEAD SCREWS CLUSTER (TYPE A1 OR B1) DETAIL AT VERTICAL MEMBERS (HEAD RECEPTOR)

DOOR WITH HEAD RECEPTOR

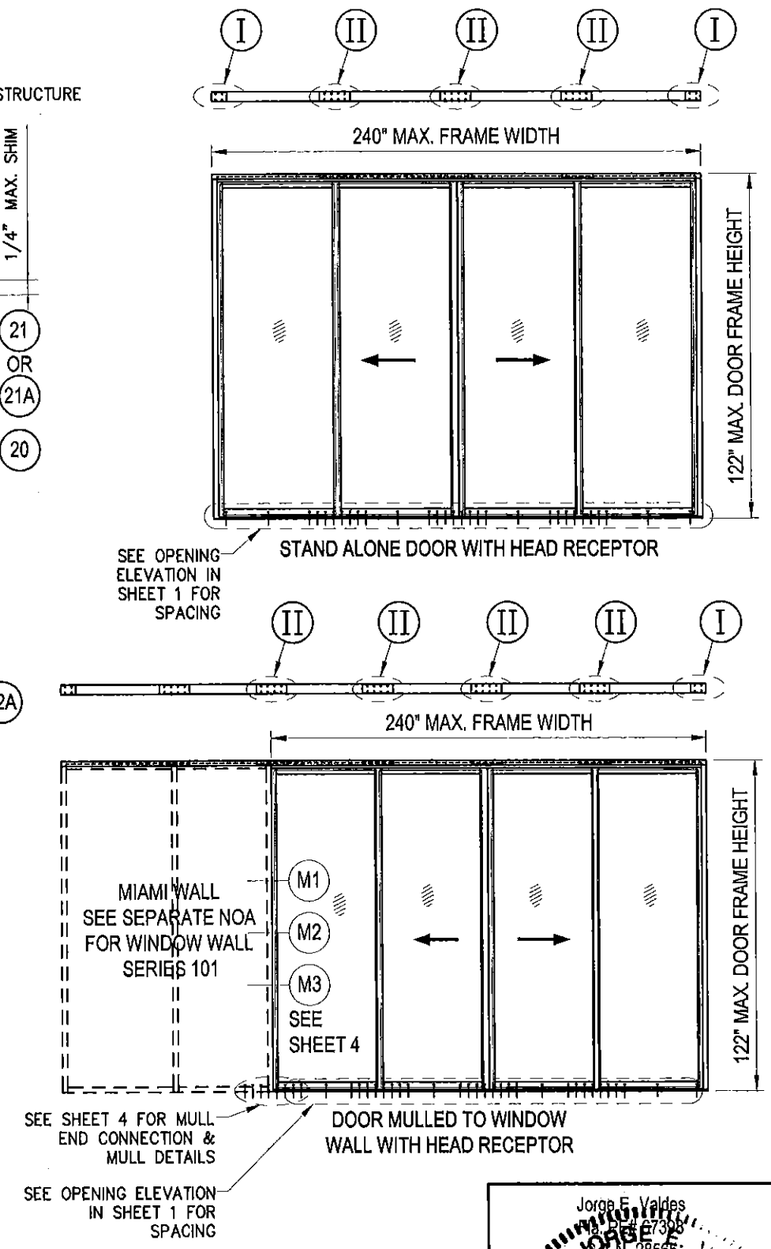

Approved as complying with the Florida Building Code
Date 5/21/15
NOA# 14-0515.10
Miami Dade Product Control
By

Jorge E. Valdes
Registered Professional Engineer
No. 67398
STATE OF FLORIDA
APR 16 2015

Miami Wall Systems, Inc.
701 West 25th Street
Hialeah, Florida. 33010
Phone:(305) 888-2300 Fax:(305) 888-3058

SERIES 113
ALUM. SLIDING GLASS DOOR
(S.M.I.)

REVISION		
NO.	DATE	

DATE: 7/30/2014
SCALE: AS NOTED
DWG. BY: O.J.L.
CHK. BY: JV
DWG NO.: 113-SM
SHEET 7 OF 11

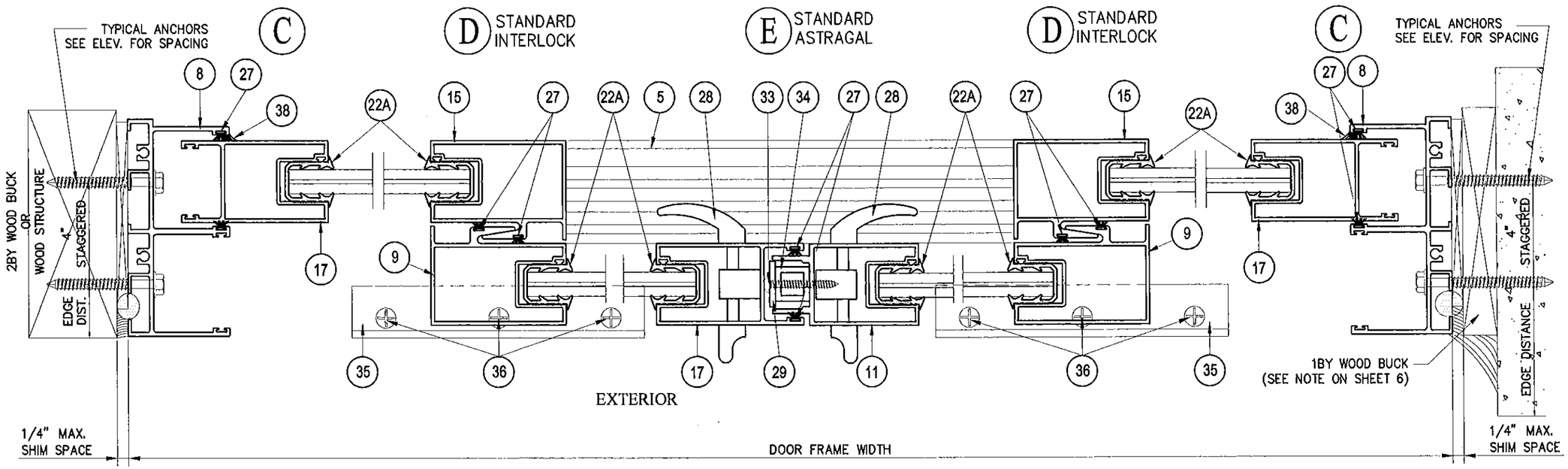

STANDARD DUTY (CHART A)

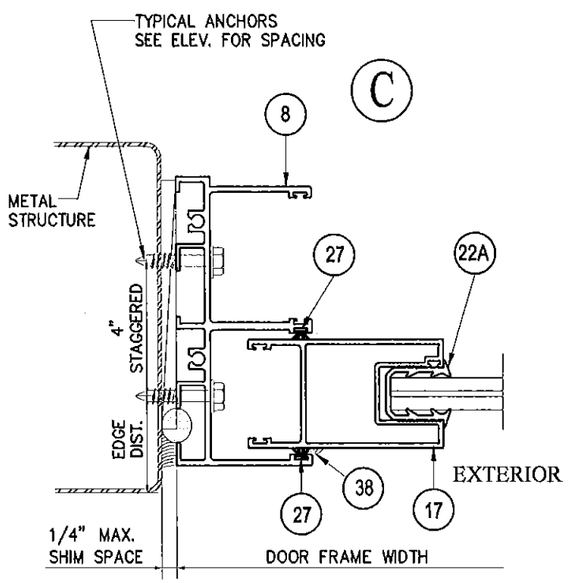

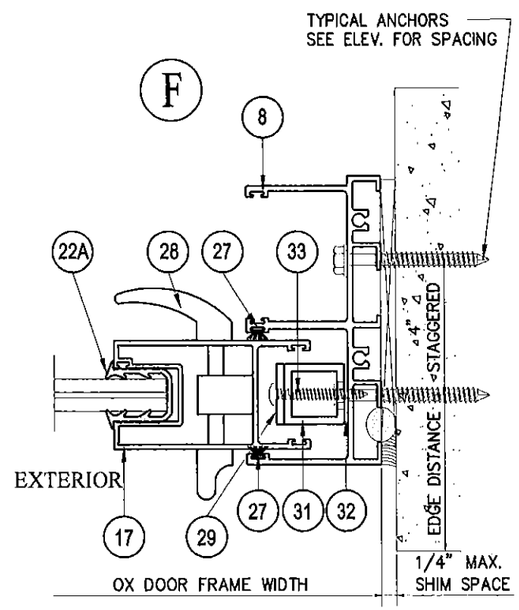

NOTE:
THE FIXED DOOR TO BE SECURED WITH ITEM #5

Approved as complying with the Florida Building Code
Date 5/21/15
NOA# 14-0515.10
Miami Dade Product Control
By Ishaq I. Chand

Jorge E. Valdes
Reg. No. 67398
JOB No. 28566
JORGE E. VALDES
LICENSE
No 67398
APR 16 2015
STATE OF FLORIDA
PROFESSIONAL ENGINEER

Miami Wall Systems, Inc.
701 West 25th Street
Hialeah, Florida. 33010
Phone:(305) 888-2300 Fax:(305) 888-3058

SERIES 113
ALUM. SLIDING GLASS DOOR
(S.M.I.)

NO.	DATE	REVISION

DATE: 7/30/2014
SCALE: AS NOTED
DWG. BY: O.J.L.
CHK. BY: JV
DWG NO.: 113-SM
SHEET 8 OF 11

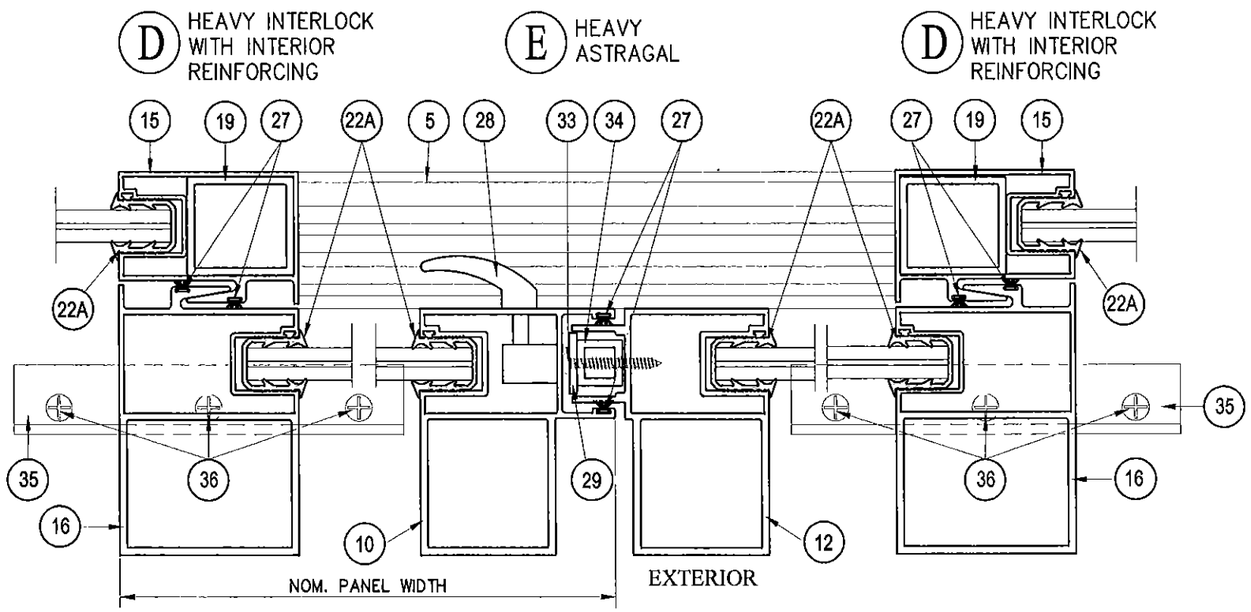

HEAVY DUTY (CHART B)

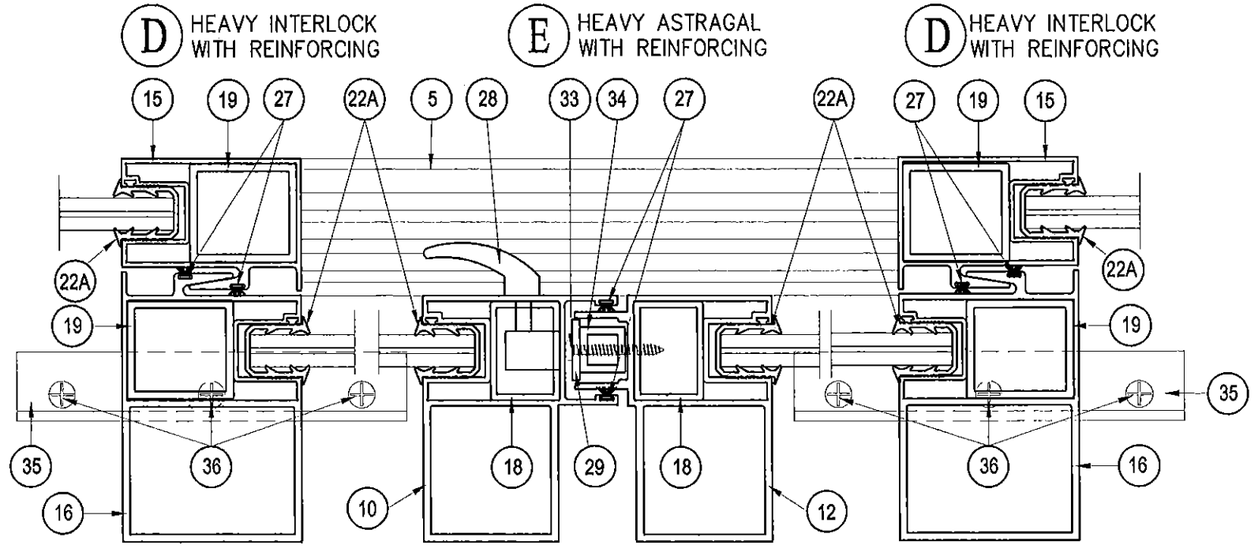

HEAVY DUTY WITH INTERLOCK / ASTRAGAL REINFORCING (CHART C)

Approved as complying with the Florida Building Code
Date 5/21/15
NOA# 14-0515.10
Miami Dade Product Control
By Ishaq I. Khan

Jorge E. Valdes
Fla. PE# 67398
C.A.N. 28565

JORGE E. VALDES
LICENSE
No 67398
APR 16 2015
STATE OF FLORIDA
PROFESSIONAL ENGINEER

Miami Wall Systems, Inc.
701 West 25th Street
Hialeah, Florida. 33010
Phone:(305) 888-2300 Fax:(305) 888-3058

SERIES 113
ALUM. SLIDING GLASS DOOR
(S.M.I.)

REVISION		
NO.	DATE	

DATE: 7/30/2014
SCALE: AS NOTED
DWG. BY: O.J.L.
CHK. BY: JV
DWG NO.: 113-SM
SHEET 9 OF 11

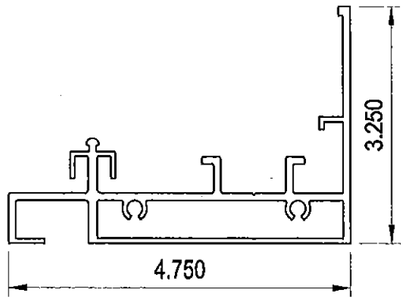

1 SILL
113-001
TYP. WALL THK = 0.100"
MAT: ALUM. ALLOY 6063-T5

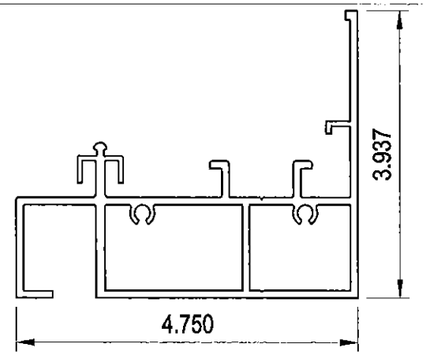

2 RAISED SILL
113-016
TYP. WALL THK = 0.100"
MAT: ALUM. ALLOY 6063-T6

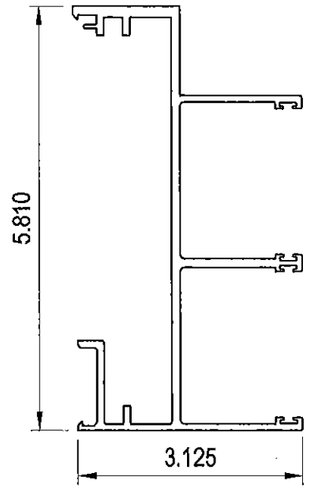

3 MEDIUM FEMALE SGD MULLION
113-018
TYP. WALL THK = 0.125"
MAT: ALUM. ALLOY 6063-T6

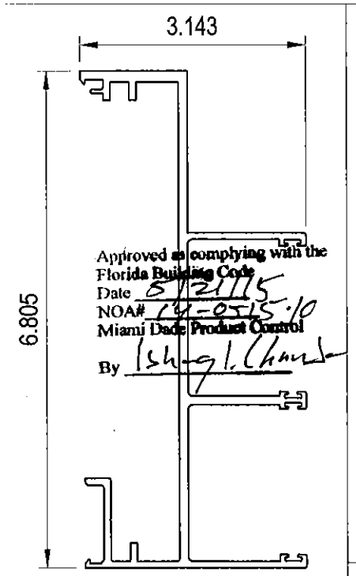

Approved as complying with the Florida Building Code
Date 8/21/15
NOA# 14-0515.10
Miami Dade Product Control
By Ishwar L. Chandra

4 HEAVY FEMALE SGD MULLION
113-019
TYP. WALL THK = 0.125"
MAT: ALUM. ALLOY 6063-T6

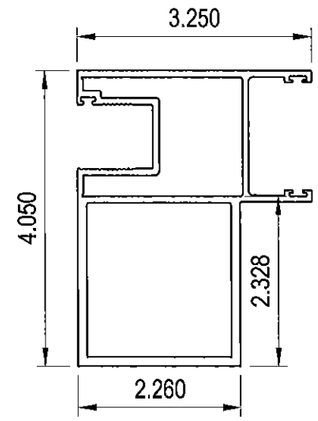

10 HEAVY LOCK STILE
113-017
TYP. WALL THK = 0.090"
MAT: ALUM. ALLOY 6063-T6

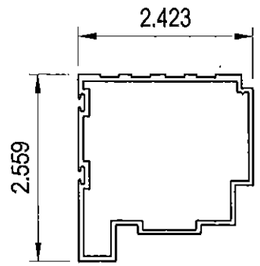

5 THRESHOLD (FIXED TRACK)
113-002
TYP. WALL THK = 0.070"
MAT: ALUM. ALLOY 6063-T5

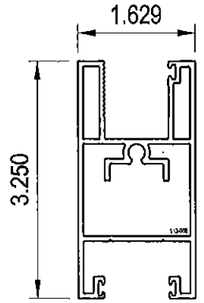

7 MOVING BOTTOM RAIL
113-005
TYP. WALL THK = 0.070"
MAT: ALUM. ALLOY 6063-T5

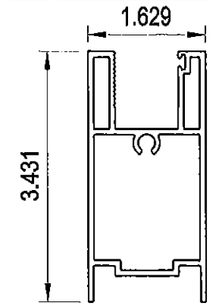

6 FIXED BOTTOM RAIL
113-004
TYP. WALL THK = 0.070"
MAT: ALUM. ALLOY 6063-T5

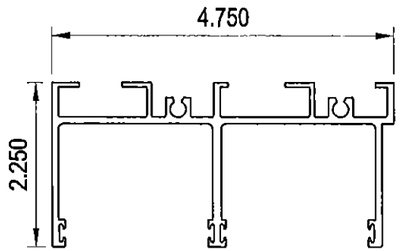

8 JAMB / HEAD
113-007
TYP. WALL THK = 0.090"
MAT: ALUM. ALLOY 6063-T5

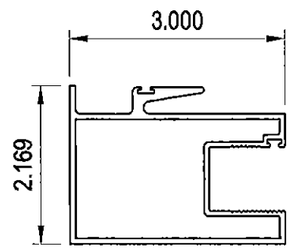

9 EXTERIOR STD. INTERLOCK STILE
113-010
TYP. WALL THK = 0.078"
MAT: ALUM. ALLOY 6063-T5

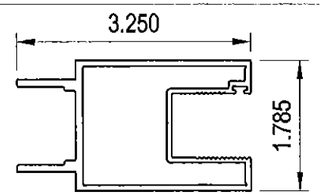

11 STANDARD ASTRAGAL
113-012
TYP. WALL THK = 0.090"
MAT: ALUM. ALLOY 6063-T6

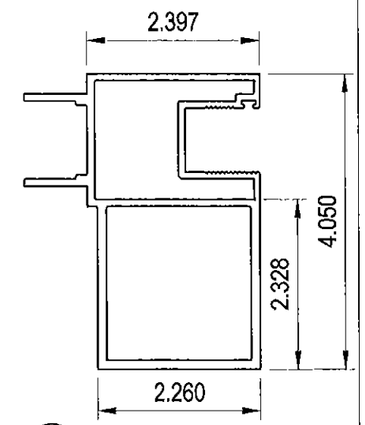

12 HEAVY ASTRAGAL
113-013
TYP. WALL THK = 0.090"
MAT: ALUM. ALLOY 6063-T5

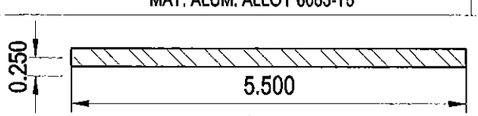

13 REINF. BAR
MAT: STEEL A36

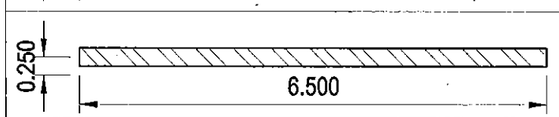

14 REINF. BAR
MAT: STEEL A36

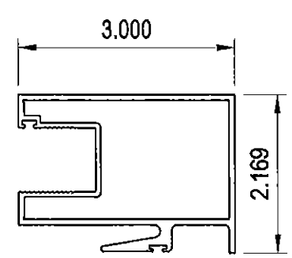

15 INTERIOR STD. INTERLOCK STILE
113-009
TYP. WALL THK = 0.078"
MAT: ALUM. ALLOY 6063-T5

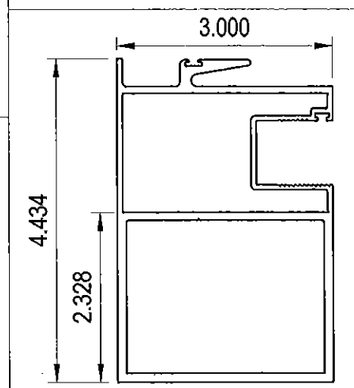

16 HEAVY EXTERIOR INTERLOCK STILE
113-029
TYP. WALL THK = 0.125"
MAT: ALUM. ALLOY 6063-T5

Jorge E. Valdes
Florida Reg. No. 67396
Date: 4/16/15
JORGE E. VALDES
LICENSE
No 67396
APR 16 2015
STATE OF
FLORIDA
PROFESSIONAL ENGINEER

Miami Wall Systems, Inc.
701 West 25th Street
Hialeah, Florida. 33010
Phone:(305) 888-2300 Fax:(305) 888-3058

SERIES 113
ALUM. SLIDING GLASS DOOR
(S.M.I.)

NO.	DATE	REVISION

DATE: 7/30/2014
SCALE: AS NOTED
DWG. BY: O.J.L.
CHK. BY: JV
DWG NO.: 113-SM
SHEET 10 OF 11

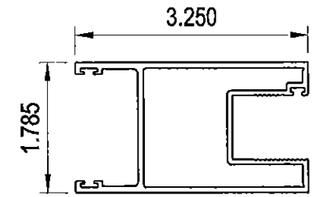

(17) LOCK STILE
113-011
TYP. WALL THK = 0.078"
MAT: ALUM. ALLOY 6063-T5

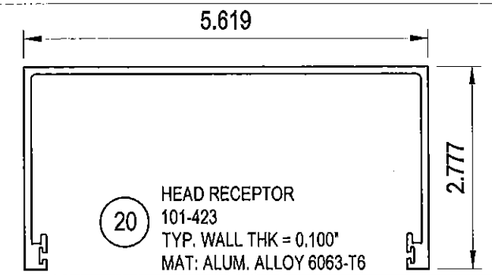

(20) HEAD RECEPTOR
101-423
TYP. WALL THK = 0.100"
MAT: ALUM. ALLOY 6063-T6

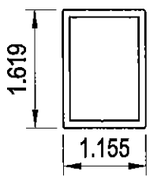

(18) ASTRAGAL REINFORCEMENT
113-014
TYP. WALL THK = 0.125"
MAT: ALUM. ALLOY 6005A-T61

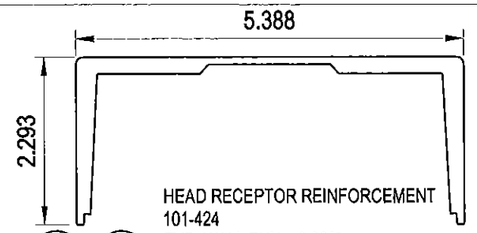

(21) & (21A) HEAD RECEPTOR REINFORCEMENT
101-424
TYP. WALL THK = 0.229"
MAT: ALUM. ALLOY 6005A-T61

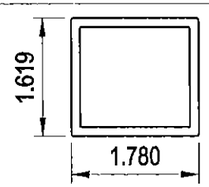

(19) INTERLOCK REINFORCEMENT
113-015
TYP. WALL THK = 0.125"
MAT: ALUM. ALLOY 6005A-T61

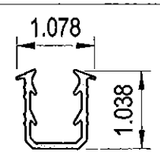

(22A) MARINE GLAZING GASKET G-113-134
MAT: FLEXIBLE PVC
DUROMETER 74 ±3

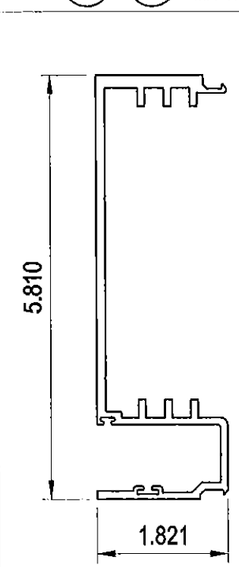

(R1) MEDIUM MALE MULLION
101-409
TYP. WALL THK = 0.125"
MAT: ALUM. ALLOY 6063-T6

REFERENCE
VERTICAL MULLION

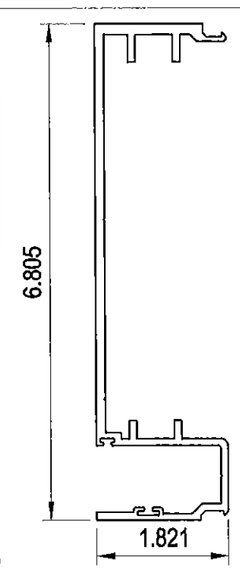

(R2) HEAVY MALE MULLION
101-411
TYP. WALL THK = 0.125"
MAT: ALUM. ALLOY 6063-T6

REFERENCE
VERTICAL MULLION

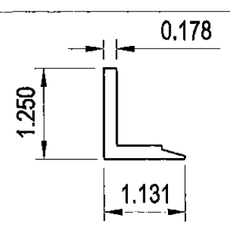

(35) RETAINER (6 1/2" LONG)
100-028
TYP. WALL THK = 0.178"
MAT: ALUM. ALLOY 6063-T5

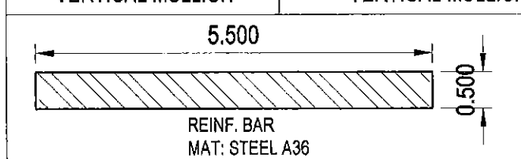

REINF. BAR
MAT: STEEL A36

REFERENCE HEAVY DUTY REINFORCING M3

ITEM #	PART #	REQ'D	DESCRIPTION	REMARKS
1	113-001	1	SILL	SGD FRAME
2	113-016	1	RAISED SILL	SGD FRAME
3	113-018	1	MEDIUM FEMALE VERTICAL MULLION	SGD FRAME
4	113-019	1	HEAVY FEMALE VERTICAL MULLION	SGD FRAME
5	113-002	1	THRESHOLD	SGD FRAME
6	113-004	SEE REMARKS	FIXED BOTTOM RAIL, JAMB & SILL	(2) PER FIXED PANEL (1) PER MOV. PANEL
7	113-005	SEE REMARKS	MOVING BOTTOM RAIL	(1) PER MOV. PANEL
8	113-007	SEE REMARKS	JAMB/HEAD	SGD FRAME
9	113-010	SEE REMARKS	EXTERIOR STD. INTERLOCK STILE	(1) PER MOV. PANEL. SEE SHEET 3
10	113-017	SEE REMARKS	HEAVY LOCK STILE	(1) PER LOOKING MOV. PANEL. SEE SHEET 3
11	113-012	SEE REMARKS	STANDARD ASTRAGAL	(1) PER MOV. PANEL. SEE SHEET 3
12	113-013	SEE REMARKS	HEAVY ASTRAGAL	(1) PER MOV. PANEL. SEE SHEET 3
13		1	1/4" X 5 1/2" REINFORCEMENT STEEL BAR	SGD PANEL
14		1	1/4" X 6 1/2" REINFORCEMENT STEEL BAR	SGD PANEL
15	113-009	SEE REMARKS	INTERIOR INTERLOCK STILE	(1) PER FIXED PANEL
16	113-029	1	HEAVY EXTERIOR INTERLOCK STILE	(1) PER FIXED PANEL
17	113-011	SEE REMARKS	STD. LOCK STILE	(1) PER FIXED PANEL (1) PER LOCKING MOV. PANEL
18	113-014	AS REQ'D	ASTRAGAL REINFORCEMENT	SEE SHEET 3
19	113-015	AS REQ'D	INTERLOCK REINFORCEMENT	SEE SHEET 3
20	101-423	AS REQ'D	HEAD RECEPTOR	SGD FRAME. SEE SHEET 7
21	101-424	AS REQ'D	HEAD RECEPTOR REINFORCEMENT 18" LONG	AT VERTICAL STILES. SEE SHEET 7
21A	101-424	AS REQ'D	HEAD RECEPTOR REINFORCEMENT 9" LONG	AT JAMB ENDS OF STAND ALONE SGD. SEE SHEET 7
22	G-101-01	AS REQ'D	GLASS VINYL GASKET	DUROMETER 75 ±5 SHORE A
22A	G-113-134	AS REQ'D	MARINE GLAZING GASKET	DUROMETER 74 ±3 SHORE A BY HI-TECH EXTRUSIONS
23	SILICONE	AS REQ'D	TREMCO PROGLAZE	AT PANELS/9/16" GLASS
24		2 PER LITE	9/16" X 3/16" X 4" LG SETTING BLOCK	DUROMETER 75 ±5 SHORE A
24A		2 PER LITE	9/16" X 1/8" X 4" LG SETTING BLOCK	DUROMETER 75 ±5 SHORE A
25		SEE REMARKS	STAINLESS STEEL ROLLER	(2) PER MOV. PANEL
26		1	STAINLESS STEEL TRACK	AT SGD FRAME SILL
27		AS REQ'D	FIN SEAL	
28		-	S/S 3 PLY HOOK LOCK + ALUM. HANDLE	(1) PER LOCK STILE
29		-	S/S KEEPER	(1) PER LOCK STILE
30		8	#14" X 1" HEX HEAD SMS	FRAME ASSEMBLY SCREWS
31		-	1" X 1" X 1/8" X 4" LG. ALUM. TUBE	(1) PER KEEPER AT JAMB
32		-	1/16" X 4" PLASTIC SHIM	(1) PER KEEPER
33		-	#10 X 1 1/2" S/S PAN HEAD SCREW	(2) PER KEEPER
34		-	3/4"X 3/4" X 1/8" X 4" LG ALUM. TUBE	(1) PER KEEPER AT ASTRAGAL
35	100-028	AS REQ'D	RETAINER 6 1/2" LONG	(1) AT EACH INTERLOCK STILE
36		SEE REMARKS	#14" X 1" F.H. S/S SMS	(3) PER RETAINER ANGLE
37		AS REQ'D	SILICONE BEAD	CONTINUOUS ALONG SILL FRAME
38		AS REQ'D	SILICONE	14 1/2" FROM BOTTOM
39		4 PER PANEL	#14" X 1" P.H. SMS	PANEL ASSEMBLY SCREWS

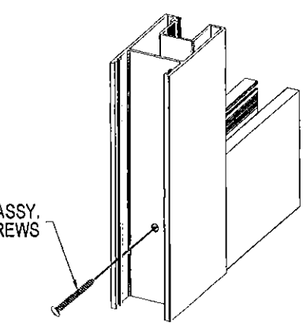

SERIES 113 SGD PANEL
CORNER ASSEMBLY DETAIL

Approved as complying with the
Florida Building Code
Date MAY 21, 2015
NOA# 14-0515.10
Miami Dade Product Control
By Ishaq I. Chanda

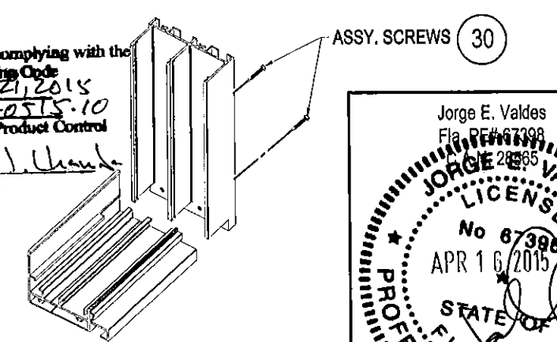

SERIES 113 SGD FRAME
CORNER ASSEMBLY DETAIL

Jorge E. Valdes
Fla. PE#67398
NCE 28365

JORGE E. VALDES
LICENSE
No 67398
APR 16 2015
STATE OF FLORIDA
PROFESSIONAL ENGINEER

Miami Wall Systems, Inc.
701 West 25th Street
Hialeah, Florida. 33010
Phone:(305) 888-2300 Fax:(305) 888-3058

SERIES 113
ALUM. SLIDING GLASS DOOR
(S.M.I.)

NO.	DATE	REVISION

DATE: 7/30/2014
SCALE: AS NOTED
DWG. BY: O.J.L.
CHK. BY: JV
DWG NO.: 113-SM
SHEET 11 OF 11