MIAMI-DADE COUNTY
PRODUCT CONTROL SECTION
11805 SW 26 Street, Room 208
Miami, Florida 33175-2474
T (786) 315-2590 F (786) 315-2599
www.miamidade.gov/economy

DEPARTMENT OF REGULATORY AND ECONOMIC RESOURCES (RER)
BOARD AND CODE ADMINISTRATION DIVISION

NOTICE OF ACCEPTANCE (NOA)

The Cookson Company
2417 S. 50th Avenue
Phoenix, AZ 85043

SCOPE:

This NOA is being issued under the applicable rules and regulations governing the use of construction materials. The documentation submitted has been reviewed and accepted by Miami-Dade County RER-Product Control Section to be used in Miami Dade County and other areas where allowed by the Authority Having Jurisdiction (AHJ).

This NOA shall not be valid after the expiration date stated below. The Miami-Dade County Product Control Section (In Miami Dade County) and/or the AHJ (in areas other than Miami Dade County) reserve the right to have this product or material tested for quality assurance purposes. If this product or material fails to perform in the accepted manner, the manufacturer will incur the expense of such testing and the AHJ may immediately revoke, modify, or suspend the use of such product or material within their jurisdiction. RER reserves the right to revoke this acceptance, if it is determined by Miami-Dade County Product Control Section that this product or material fails to meet the requirements of the applicable building code.

This product is approved as described herein, and has been designed to comply with the Florida Building Code, including the High Velocity Hurricane Zone.

DESCRIPTION: #4 Slat and #45 Insulated Slat Steel Roll-up Door up to 26'-0" Wide

APPROVAL DOCUMENT: Drawing No. **FBC260-52-DC**, titled "Dade County Wind Door 26'-0" Wide", sheets 1 through 3 of 3, dated 07/12/2004, with revision 4 dated 04/15/2014, prepared by Cookson Rolling Doors, signed and sealed by Joseph H. Dixon, Jr., P.E., bearing the Miami-Dade County Product Control renewal stamp with the Notice of Acceptance number and expiration date by the Miami-Dade County Product Control Section.

MISSILE IMPACT RATING: Large and Small Missile Impact Resistant

LABELING: A permanent label with the manufacturer's name or logo, Gastonia, NC, model number, the positive and negative design pressure rating, indicate impact rated if applicable, installation instruction drawing reference number, approval number (NOA), the applicable test standards, and the statement reading 'Miami-Dade County Product Control Approved' is to be located on the door's side track, bottom angle, or inner surface of a panel.

RENEWAL of this NOA shall be considered after a renewal application has been filed and there has been no change in the applicable building code negatively affecting the performance of this product.

TERMINATION of this NOA will occur after the expiration date or if there has been a revision or change in the materials, use, and/or manufacture of the product or process. Misuse of this NOA as an endorsement of any product, for sales, advertising or any other purposes shall automatically terminate this NOA. Failure to comply with any section of this NOA shall be cause for termination and removal of NOA.

ADVERTISEMENT: The NOA number preceded by the words Miami-Dade County, Florida, and followed by the expiration date may be displayed in advertising literature. If any portion of the NOA is displayed, then it shall be done in its entirety.

INSPECTION: A copy of this entire NOA shall be provided to the user by the manufacturer or its distributors and shall be available for inspection at the job site at the request of the Building Official.

This NOA **renews NOA # 09-0813.05** and consists of this page 1 and evidence page E-1, as well as approval document mentioned above.

The submitted documentation was reviewed by **Carlos M. Utrera, P.E.**

MIAMI-DADE COUNTY APPROVED

07/29/2014

NOTICE OF ACCEPTANCE: EVIDENCE SUBMITTED

A. DRAWINGS

1. Drawing No. **FBC260-52-DC**, titled "Dade County Wind Door 26'-0" Wide", sheets 1 through 3 of 3, dated 07/12/04, with revision 4 dated 04/15/2014, prepared by Cookson Rolling Doors, signed and sealed by Joseph H. Dixon, Jr., P.E.

B. TESTS *"Submitted under NOA # 09-0813.05"*

1. Test report on evaluation of painted or coated specimens subject to corrosive environment per ASTM D 1654 of painted G40 and 60 and G90 specimens, prepared by ETC Laboratories, Test Report No. **ETC-04-977-15284.0**, dated 10/11/2004, signed Joseph L. Doldan, P.E.

"Submitted under NOA # 04-0402.01"

2. Test report on Large Missile Impact Test per FBC, TAS 201, Cyclic Wind Pressure Test per FBC, TAS 203, Uniform Static Air Pressure Test per FBC, TAS 202 and Standard Tensile Test per ASTM E8 on Series/Model, FC Slat # 4 Roll-Up Door 26'-0" wide, prepared by Architectural Testing, Inc., Test Report No.**03-48467.01**, dated 03/14/2004, signed and sealed by Joseph. A. Reed, P.E.

C. CALCULATIONS *"Submitted under NOA # 04-0402.01"*

1. Calculations for Attachment of Guide Angles to Steel or Masonry Jamb for Steel Slat Rolling Doors, prepared by Joseph H. Dixon Jr., dated 07/01/2005, signed and sealed by Joseph H. Dixon Jr., P.E.

D. QUALITY ASSURANCE

1. Miami-Dade Department of Regulatory and Economic Resources (RER)

E. MATERIAL CERTIFICATIONS *"Submitted under NOA # 04-0402.01"*

1. UL Classified Certificate AFM-1 for foam plastic per ASTM E84-04 and ASTM C578-95, dated June, 2002, supplied by ACH Foam Technologies, LLC, plant.

F. STATEMENTS

1. Drawing No. FBC260-52-DC statement of code conformance to 2010 FBC, dated 04/15/2014, signed and sealed by Joseph H. Dixon, Jr., P.E.
2. One year renewal request letter issued by The Cookson Company, dated 05/09/2014, signed by Trevor Errington.

"Submitted under NOA # 09-0813.05"

3. Statement letter of no financial interest, dated 06/24/2009, signed and sealed by Joseph H. Dixon, Jr., P.E.

07/29/2014

Carlos M. Utrera, P.E.
Product Control Examiner
NOA No. 14-0520.14
Expiration Date: August 26, 2015
Approval Date: August 7, 2014

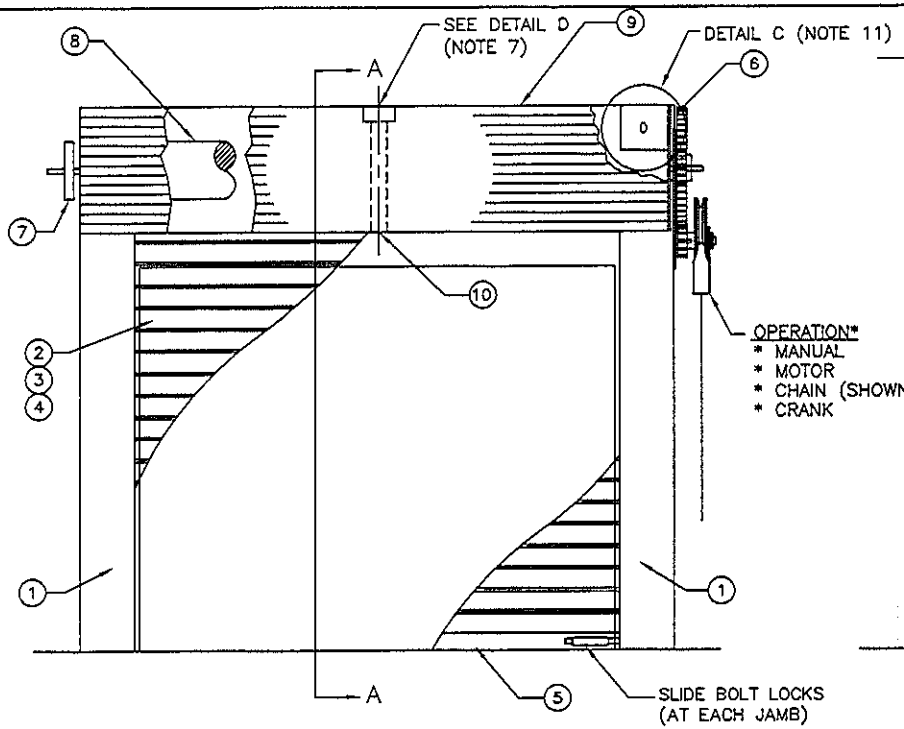

COIL-SIDE ELEVATION

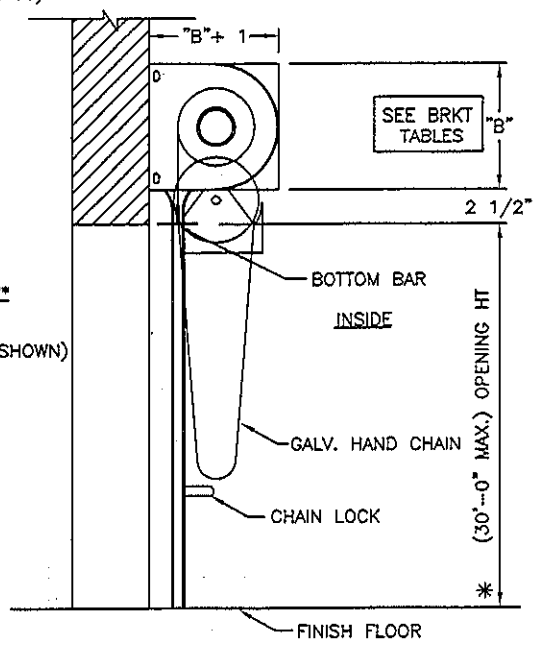

SECTION A-A

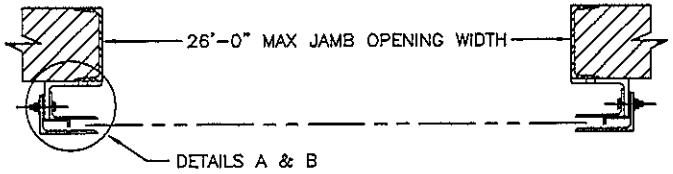

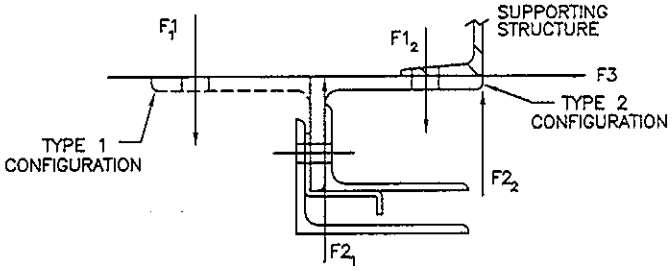

BRACKET TABLE (#4 SLAT)	
DOOR HT UP TO (FT)	BRACKET SIZE "B"
4	13"
8	15"
12	18"
18	20"
20	22"
27	24"
30	26"

PRODUCT RENEWED
as complying with the Florida
Building Code
Acceptance No 14-0520.14
Expiration Date 08/26/2015
By
Miami Dade Product Control

TABLE OF CONTENTS	
SHEET #	DESCRIPTION
1	GENERAL NOTES AND ELEVATION
2	CROSS SECTIONS AND DETAILS
3	FORCE TABLE, FASTENER SCHEDULE & PARTS LIST

NOTES:
1. THIS DRAWING HAS BEEN APPROVED AS COMPLYING WITH THE FLORIDA BUILDING CODE 2010.
2. DOOR HAS BEEN TESTED TO TAS 201, TAS 202, AND TAS 203.
3. THE DOOR HAS A DESIGN PRESSURE OF ±52 PSF.
4. ANCHOR BOLTS ARE HILTI KWIK BOLT 3 INSTALLED ON 4000 PSI CONCRETE.
5. WALL ANGLE BOLTS TO BE GRADE 5. CALCULATIONS MADE WITH THREADS IN THE SHEAR PLANE.
6. TYPE E70 ELECTRODES TO BE USED FOR WELDED ATTACHMENT.
7. HOOD IS BOLTED TO BRKT. PLATE WITH #10 TEK SCREWS. INTERMEDIATE SUPPORT IS FURNISHED FOR HOODS OVER 14' WIDE.
8. CURTAIN IS FASTENED TO BARREL WITH 3/8" BOLTS @ 36" O.C. MAX.
9. WINDLOCKS/ENDLOCKS ARE ATTACHED TO SLATS WITH ø1/4-20 FHMS. ENDLOCKS ARE PROVIDED ON CURTAIN ABOVE OPENING HEIGHT ATTACHED W/ ø3/16" PLATED STEEL RIVETS.
10. WINDLOCK BAR MATL: FORMED 3/16" THK FLAT BAR STEEL (DETAIL A).
11. (1) ADDITIONAL ANGLE CLIP REQ'D AT THE TOP OF EACH GUIDE FOR DOORS OVER 20' HIGH WHEN MOUNTING TO CONCRE
12. STEEL PER ASTM A653, WITH A GALV COATING OF G90 (1 G60 (WHITE), G40 (GREY), AND G40 (POWDERCOATED) COA... AS TESTED IN ETC REPORT #ETC04013 DATED 10/11/04.
13. ROLL UP MECHANISM NOT INCLUDED IN THIS APPROVAL. MUST BE CERTIFIED BY AN INDEPENDENT TESTING AGENCY.
14. SLATS ARE COLD ROLLED GALV STEEL, ASTM A653, SS GRADE 50. TEST DOOR SAMPLE AT YIELD STRENGTH OF 48,300 PSI.
15. INSULATION TESTED IN ACCORDANCE WITH ASTM E84 PER ICC-ES ESR-1498 (BASF) AND ESR-1634 (FLINT HILLS RESOURCES).

NO.	BY	DATE	REVISION
4	TJE	4/15/14	UPDATED BUILDING CODE, INSUL. NOTE
3	RG	6/2/09	AS NOTED
2	RG	7/18/05	UPDATED ANCHORS
1	RG	7/12/04	AS NOTED
	RG	12/15/03	ORIGINAL DRAWING

COOKSON ROLLING DOORS
2417 S. 50th AVENUE
PHOENIX, AZ 85043
800 TULIP DRIVE
GASTONIA, NC 28052

DADE COUNTY DOOR 26'-0" ±52 PSF	
ENG. NAME: JOSEPH H. DIXON JR.	COOKSON APPROVAL
DISCIPLINE: STRUCTURAL	BY: E.E.
FL REGISTRATION: 7768	DATE: 7/12/04
DRAWING NO. FBC260-52-DC	SHEET 1 OF 3

JOSEPH H. DIXON, JR.
LICENSE
No. 7768
STATE OF
FLORIDA
PROFESSIONAL ENGINEER
5/14/14

DADE COUNTY WIND DOOR 26'-0" WIDE

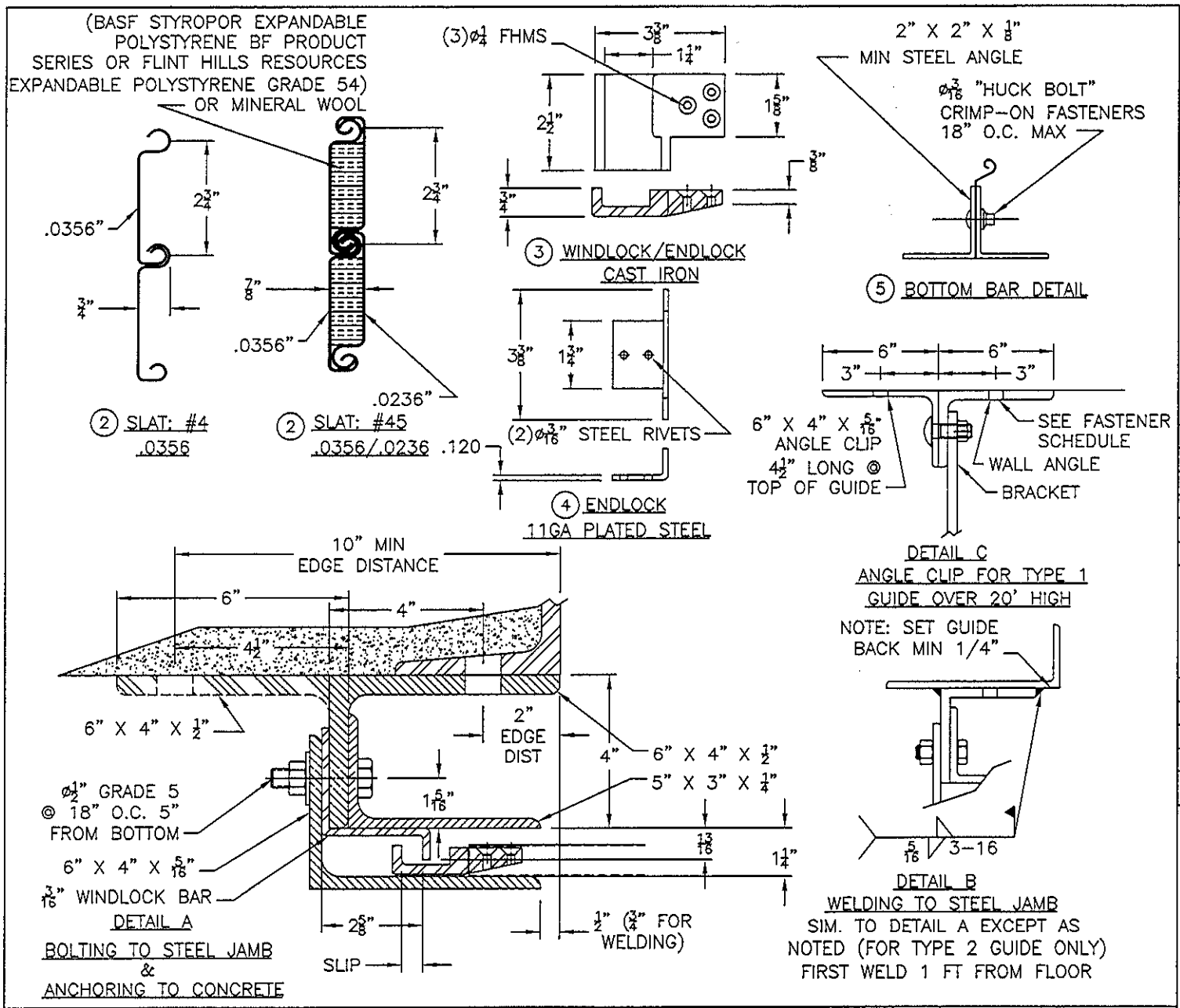

DADE COUNTY WIND DOOR 26'-0" WIDE

PRODUCT RENEWED
as complying with the Florida Building Code
Acceptance No 14-0520.14
Expiration Date 08/26/2015
By
Miami Dade Product Control

NO.	BY	DATE	REVISION
4	TJE	4/15/14	UPDATED BUILDING CODE, INSUL. NOTE
3	RG	6/2/09	AS NOTED
2	RG	7/18/05	UPDATED ANCHORS
1	RG	7/12/04	AS NOTED
	RG	12/15/03	ORIGINAL DRAWING

COOKSON ROLLING DOORS
2417 S. 50th AVENUE
PHOENIX, AZ 85043
800 TULIP DRIVE
GASTONIA, NC 28052

DADE COUNTY DOOR 26'-0" ±52 PSF	
ENG. NAME: JOSEPH H. DIXON JR.	COOKSON APPROVAL
DISCIPLINE: STRUCTURAL	BY: E.E.
FL REGISTRATION: 7768	DATE: 7/12/04
DRAWING NO. FBC260-52-DC	SHEET 2 OF 3

JOSEPH H. DIXON, JR. LICENSE No. 7768 STATE OF FLORIDA PROFESSIONAL ENGINEER

5/14/14

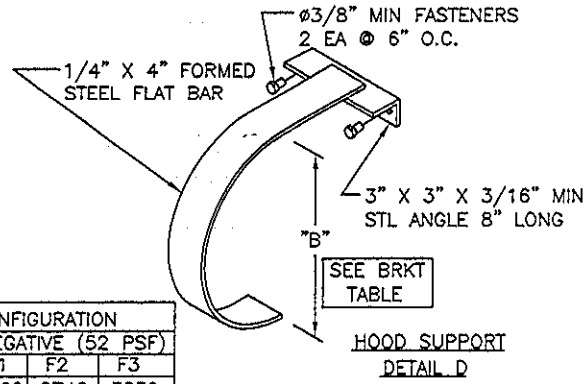

FORCE ON STRUCTURE (#/FT.)

WIDTH	SLAT TYPE	TYPE 1 GUIDE CONFIGURATION						TYPE 2 GUIDE CONFIGURATION					
		POSITIVE (52 PSF)			NEGATIVE (52 PSF)			POSITIVE (52 PSF)			NEGATIVE (52 PSF)		
		F1	F2	F3	F1	F2	F3	F1	F2	F3	F1	F2	F3
22'-7" TO 26'	#4&45	3109	2431	3839	4412	5090	3839	8860	8182	3839	8062	8740	3839
UP TO 22'-6"		2376	1789	3008	3482	4069	3008	6961	6373	3008	6220	6807	3008

FASTENER SCHEDULE

WIDTH	(1) WINDLOCK SPACING	SLIP	GUIDE ANGLE THICKNESS	WALL ANGLE THICKNESS	(3) CONCRETE ANCHOR	MIN EMBED-MENT	(2) WALL ANGLE BOLTS (GRADE 5)	GUIDE ANGLE ASSEMBLY BOLTS
22'-7" TO 26'	1	3/4"	DETAIL A	1/2"	3/4ø @ 6" O.C.	4 3/4"	3/4ø @ 16" O.C.	1/2ø @ 18" O.C.
UP TO 22'-6"	1	3/4"	DETAIL A	1/2"	5/8ø @ 6" O.C.	4"	5/8ø @ 16" O.C.	1/2ø @ 18" O.C.

(1) WINDLOCK ON EVERY SLAT UP TO OPENING HEIGHT ON CURTAIN

(2) 2 O.D. X 1/8 THICK WASHER

(3) HILTI KWIK BOLT 3. FIRST ANCHOR 3" FROM BOTTOM. DO NOT USE FOR TYPE 2 INSTALLATION.

PARTS LIST

ITEM NO.	DESCRIPTION	QTY.	MATERIAL
1	GUIDE (PAIR)	1	STEEL, ASTM A-36
2	SLAT	AS REQ'D	GALV STEEL, ASTM A-653 SS GRADE 50 (NOTE 12)
3	WINDLOCK/ENDLOCK	AS REQ'D	CAST IRON, ASTM A-536
4	ENDLOCK	AS REQ'D	STEEL, ASTM A-1011
5	BOTTOM BAR	1	STEEL, ASTM A-36
6	DRIVE BRACKET ASSEMBLY	1	STEEL, ASTM A-36
7	TENSION BRACKET ASSEMBLY	1	STEEL, ASTM A-36
8	BARREL PIPE/COUNTER BALANCE		STEEL, ASTM A-108, A-229, A-500
9	GALVANIZED HOOD	1	GALVANIZED STEEL, ASTM A-653 (NOTE 12)
10	HOOD SUPPORT	AS REQ'D	STEEL, ASTM A-36

DADE COUNTY WIND DOOR 26'-0" WIDE

PRODUCT RENEWED
as complying with the Florida Building Code
Acceptance No 14-0520.14
Expiration Date 08/26/2015
By _____
Miami Dade Product Control

NO.	BY	DATE	REVISION
4	TJE	4/15/14	UPDATED BUILDING CODE, INSUL. NOTE
3	RG	6/2/09	AS NOTED
2	RG	7/18/05	UPDATED ANCHORS
1	RG	7/12/04	AS NOTED
	RG	12/15/03	ORIGINAL DRAWING

COOKSON ROLLING DOORS
2417 S. 50th AVENUE
PHOENIX, AZ 85043
800 TULIP DRIVE
GASTONIA, NC 28052

DADE COUNTY DOOR 26'-0" ±52 PSF

ENG. NAME: JOSEPH H. DIXON JR.	COOKSON APPROVAL
DISCIPLINE: STRUCTURAL	BY: E.E.
FL REGISTRATION: 7768	DATE: 7/12/04
DRAWING NO. FBC260-52-DC	SHEET 3 OF 3

JOSEPH H. DIXON, JR. LICENSE No. 7768 STATE OF FLORIDA PROFESSIONAL ENGINEER

5/14/14