MIAMI-DADE COUNTY
DEPARTMENT OF REGULATORY AND ECONOMIC RESOURCES (RER)
BOARD AND CODE ADMINISTRATION DIVISION

MIAMI-DADE COUNTY
PRODUCT CONTROL SECTION
11805 SW 26 Street, Room 208
T (786) 315-2590 F (786) 315-2599
www.miamidade.gov/economy

NOTICE OF ACCEPTANCE (NOA)

Enclos Corporation
550 Fairway Drive
Deerfield Beach, FL 33441

SCOPE:

This NOA is being issued under the applicable rules and regulations governing the use of construction materials. The documentation submitted has been reviewed and accepted by Miami-Dade County RER - Product Control Section to be used in Miami Dade County and other areas where allowed by the Authority Having Jurisdiction (AHJ).

This NOA shall not be valid after the expiration date stated below. The Miami-Dade County Product Control Section (In Miami Dade County) and/or the AHJ (in areas other than Miami Dade County) reserve the right to have this product or material tested for quality assurance purposes. If this product or material fails to perform in the accepted manner, the manufacturer will incur the expense of such testing and the AHJ may immediately revoke, modify, or suspend the use of such product or material within their jurisdiction. RER reserves the right to revoke this acceptance, if it is determined by Miami-Dade County Product Control Section that this product or material fails to meet the requirements of the applicable building code.

This product is approved as described herein, and has been designed to comply with the Florida Building Code, including the High Velocity Hurricane Zone.

DESCRIPTION: Series "7030 SGP CW Structurally Glazed" Aluminum Curtain Wall System – L.M.I.

APPROVAL DOCUMENT: Drawing No. **7030TSLMI**, titled "7030 Series Curtain Wall – Twin Span - Large Missile Impact", sheets 1 through 31 of 31, dated 8/13/14, prepared by manufacturer, signed and sealed by William D. Cook, P.E., bearing the Miami-Dade County Product Control Revision stamp with the Notice of Acceptance number and expiration date by the Miami-Dade County Product Control Section.

MISSILE IMPACT RATING: Large and Small Missile Impact Resistant

LABELING: Each unit shall bear a permanent label with the manufacturer's name or logo, city, state, model/series, and following statement: "Miami-Dade County Product Control Approved", unless otherwise noted herein.

RENEWAL of this NOA shall be considered after a renewal application has been filed and there has been no change in the applicable building code negatively affecting the performance of this product.

TERMINATION of this NOA will occur after the expiration date or if there has been a revision or change in the materials, use, and/or manufacture of the product or process. Misuse of this NOA as an endorsement of any product, for sales, advertising or any other purposes shall automatically terminate this NOA. Failure to comply with any section of this NOA shall be cause for termination and removal of NOA.

ADVERTISEMENT: The NOA number preceded by the words Miami-Dade County, Florida, and followed by the expiration date may be displayed in advertising literature. If any portion of the NOA is displayed, then it shall be done in its entirety.

INSPECTION: A copy of this entire NOA shall be provided to the user by the manufacturer or its distributors and shall be available for inspection at the job site at the request of the Building Official.

This NOA **revises and renews NOA# 10-0525.10** and consists of this page 1 and evidence pages E-1 and E-2, as well as approval document mentioned above.

The submitted documentation was reviewed by **Manuel Perez, P.E.**

MIAMI-DADE COUNTY APPROVED

8/13/14

Enclos Corporation

NOTICE OF ACCEPTANCE: EVIDENCE SUBMITTED

A. DRAWINGS

1. Manufacturer's die drawings and sections.
2. Drawing No **7030TSLMI**, Sheets 1 through 31 of 31, titled "7030 Series Curtain Wall - Twin Span - Large Missile Impact", dated 8/13/14, prepared by manufacturer, signed and sealed by William D. Cook, P.E.

B. TESTS

1. Test reports on: 1) Air Infiltration Test, per FBC, TAS 202-94
   2) Uniform Static Air Pressure Test, Loading per FBC TAS 202-94
   3) Water Resistance Test, per FBC, TAS 202-94
   4) Small Missile Impact Test per FBC, TAS 201-94
   5) Cyclic Wind Pressure Loading per FBC, TAS 203-94

   along with marked-up drawings and installation diagram of aluminum curtain wall system prepared by Construction Research Laboratory, Inc., Test Report No. **CRL-7261, mock-up #1**, dated 9/11/08 to 10/08/08, signed and sealed by Richard Sembello, P.E.
   (For reference only - submitted under previous OTA#09-1336, for MET 2 Project)
2. Test reports on: 1) Uniform Static Air Pressure Test, Loading per FBC TAS 202-94
   2) Small Missile Impact Test per FBC, TAS 201-94
   3) Cyclic Wind Pressure Loading per FBC, TAS 203-94

   along with marked-up drawings and installation diagram of aluminum curtain wall system prepared by Construction Research Laboratory, Inc., Test Report No. **CRL-7264, mock-up #2**, dated 9/08 to 12/08, signed and sealed by Richard Sembello, P.E.
   (For reference only - submitted under previous OTA#09-1336, for MET 2 Project)
3. Test reports on: 1) Uniform Static Air Pressure Test, Loading per FBC TAS 202-94
   2) Large Missile Impact Test per FBC, TAS 201-9
   3) Cyclic Wind Pressure Loading per FBC, TAS 203-94

   along with marked-up drawings and installation diagram of aluminum curtain wall system prepared by Construction Research Laboratory, Inc., Test Report No. **CRL-7265, mock-up #3**, dated 9/4/08, signed and sealed by Richard Sembello, P.E.
   (For reference only - submitted under previous OTA#08-1789, for MET 2 Project)

Manuel Perez

Manuel Perez, P.E.
Product Control Examiner
NOA No. 14-0527.02
Expiration Date: June 03, 2019
Approval Date: August 14, 2014

NOTICE OF ACCEPTANCE: EVIDENCE SUBMITTED

B. TESTS (CONTINUED)

4. Test reports on: 1) Air Infiltration Test, per FBC, TAS 202-94
   2) Uniform Static Air Pressure Test, Loading per FBC TAS 202-94
   3) Water Resistance Test, per FBC, TAS 202-94
   4) Small Missile Impact Test per FBC, TAS 201-94
   5) Large Missile Impact Test per FBC, TAS 201-9
   6) Cyclic Wind Pressure Loading per FBC, TAS 203-94

   along with marked-up drawings and installation diagram of aluminum curtain wall system prepared by Hurricane Testing Lab., Test Report No. **HTL-0434-0616.06**, specimens A, B, C, G, 3, 4, 5, 14, 15, 16 and 17, dated 6/13/07, signed and sealed by Vinu J. Abraham, P.E. ***(Submitted under NOA# 08-0915.13)***

C. CALCULATIONS

1. Revised Anchor Calculations, and Structural Analysis, complying with FBC2007, dated 07/31/08 and 08/16/10, prepared by Bromley-Cook Engineering, signed and sealed by William D. Cook, P.E.
   (Submitted under previous NOA# 10-0525.10)
2. Glazing complies with **ASTM E1300-04.**

D. QUALITY ASSURANCE

1. Miami-Dade Department of Regulatory and Economic Resources (RER)

E. MATERIAL CERTIFICATIONS

1. Notice of Acceptance No. **11–0624.02** issued to **E.I. DuPont DeNemours & Co.**, Inc. for their "**DuPont SentryGlas® Interlayer**" dated 08/25/11, expiring on 01/14/17.
2. Notice of Acceptance No. **12–1231.08** issued to **Eastman Chemical Company (MA)** for their "**Saflex CP – Saflex and Saflex HP Composite Glass Interlayers with PET Core**" dated 03/28/13, expiring on 12/11/18.

F. STATEMENTS

1. Statement letter of conformance, complying with **FBC–2010**, dated April 17, 2014, issued by Bromley-Cook Engineering, signed and sealed by William D. Cook, P.E.
2. Statement letter of no financial interest, dated June 2, 2008, signed and sealed by William D. Cook, P.E.
   (Submitted under previous NOA# 10-0525.10)

G. OTHERS

1. Notice of Acceptance No. **10-0525.10**, issued to Enclos Corporation for their Series "7030 SGP CW Structurally Glazed" Aluminum Curtain Wall System – L.M.I., approved on 10/20/10 and expiring on 06/03/14.

Manuel Perez, P.E.
Product Control Examiner
NOA No. 14-0527.02
Expiration Date: June 03, 2019
Approval Date: August 14, 2014

ENCLOS CORP. FLORIDA HURRICANE SYSTEMS
7030 SERIES TWIN SPAN CURTAIN WALL
4-SIDED STRUCTURALLY GLAZED WITH AND WITHOUT FACE CAPS
LARGE MISSILE IMPACT RESISTANT

GLASS TYPES - HEAT STRENGTHENED

LARGE MISSILE IMPACT
MONOLITHIC / LAMINATED

A
- 1/4" CLEAR HEAT STRENGTHENED
- .075" SAFLEX CP INTERLAYER BY EASTMAN CHEMICAL COMPANY
- 1/4" CLEAR HEAT STRENGTHENED

E
- 1/4" CLEAR HEAT STRENGTHENED
- .090 SENTRYGLAS INTERLAYER BY DUPONT
- 1/4" CLEAR HEAT STRENGTHENED

N
- 1/4" CLEAR HEAT STRENGTHENED
- .075" SAFLEX CP INTERLAYER BY EASTMAN CHEMICAL COMPANY
- 1/4" CLEAR HEAT STRENGTHENED W/FRIT

GLASS TYPES - TEMPERED

MONOLITHIC / LAMINATED

At
- 1/4" CLEAR TEMPERED
- .075" SAFLEX CP INTERLAYER BY EASTMAN CHEMICAL COMPANY
- 1/4" CLEAR TEMPERED

Ct
- 1/4" CLEAR TEMPERED
- .100 SENTRYGLAS INTERLAYER BY DUPONT
- 1/4" CLEAR TEMPERED

INSULATED / LAMINATED

Bt INNER LITE-
- 1/4" CLEAR TEMPERED
- .075" SAFLEX CP INTERLAYER BY EASTMAN CHEMICAL COMPANY
- 1/4" CLEAR TEMPERED
- 1/2" CLEAR AIR SPACE

OUTER LITE-
- 1/4" CLEAR TEMPERED

Dt INNER LITE-
- 1/4" CLEAR TEMPERED
- .100 SENTRYGLAS INTERLAYER BY DUPONT
- 1/4" CLEAR TEMPERED
- 1/2" CLEAR AIR SPACE

OUTER LITE-
- 1/4" CLEAR TEMPERED

DRAWING INDEX

SHEET	DESCRIPTION
1/33	COVER SHEET
2/33	MATERIALS/PARTS LEGEND
3/33	ELEVATIONS - WITH FACE COVERS
4/33	ELEVATIONS - WITHOUT FACE COVERS
5/33	GLASS SIZE CHARTS - MONOLITHIC W/ COVERS
6/33	GLASS SIZE CHARTS - MONOLITHIC W/O COVERS
7/33	GLASS SIZE CHARTS - INSULATED W/ COVERS
8/33	GLASS SIZE CHARTS - INSULATED W/O COVERS
9/33	MULLION SPAN CHARTS
10/33	DETAILS - FRAME SILLS & INT. HORIZONTALS
11/33	DETAILS - FRAME HEADS
12/33	DETAILS - FRAME HEADS
13/33	DETAILS - STACK RAIL
14/33	DETAILS - STACK RAIL
15/33	DETAILS - INTERMEDIATE ANCHOR
16/33	DETAILS - FRAME JAMBS AT HEAD RAIL
17/33	DETAILS - FRAME JAMBS
18/33	DETAILS - CORNER MULLIONAT STACK & HEAD RAIL
19/33	DETAILS - CORNER MULLION AT INT. ANCHOR
20/33	DETAILS - CORNER MULLION & TYPICAL MULLION
21/33	DETAILS - TYPICAL MULLION AT STACK JOINT
22/33	DETAILS - TYPICAL MULLION AT INT. ANCHOR
23/33	DETAILS - FRAME JAMB AT INT. ANCHOR
24/33	DETAILS - FRAME JAMBS AT END DAMS
25/33	DETAILS - TYPICAL MULLION AT HEAD RAIL
26/33	ANCHOR OPTIONS CHART - HEAD & SILL
27/33	ANCHOR OPTIONS CHART - MID SPAN
28/33	EXTRUSIONS
29/33	EXTRUSIONS
30/33	EXTRUSIONS
31/33	FRAME ASSEMBLY DETAILS

GENERAL NOTES

1.) ALUMINUM WINDOW WALL SYSTEM IS TESTED FOR LARGE MISSILE IMPACT. SHUTTERS ARE NOT REQUIRED.

2.) FLORIDA BUILDING CODE REQUIREMENTS (HVHZ) REQUIREMENTS: TAS-201 - LARGE MISSILE IMPACT TAS-202 - AIR LEAKAGE, WATER PENETRATION & STRUCTURAL PERFORMANCE (WATER @ 20 psf.) TAS-203 - CYCLING

3.) THIS SYSTEM MAY BE USED IN CONJUNCTION WITH APPROVED ENTRANCE DOORS.

4.) CODE REQUIREMENTS FOR SAFEGUARDS MUST BE OBSERVED.

5.) THIS PRODUCT IS DESIGNED TO COMPLY WITH THE HIGH VELOCITY HURRICANE ZONE OF THE 2010 FLORIDA BUILDING CODE (FBC-2010)

6.) WOOD BUCKS BY OTHERS MUST BE ANCHORED PROPERLY TO TRANSFER LOADS TO THE STRUCTURE. BUCKS SHALL BE DESIGNED BY PROFESSIONAL ENGINEER OF RECORD.

7.) OPENINGS SHALL BE CONSTRUCTED IN AN ACCEPTABLE MANNER BY WHICH INSTALLED ALUMINUM FRAMES CAN BE PROPERLY ANCHORED TO THE STRUCTURE ACCORDING TO DETAILS AND CHARTS ON THESE DESIGN DRAWINGS.

8.) ANCHORS SHALL BE AS LISTED IN CHARTS AND SPACED AS SPCIFIED ON THESE DESIGN DRAWINGS.

9.) ANCHOR EMBEDMENT TO BASE MATERIAL SHALL BE AS SPECIFIED ON THESE DESIGN DRAWINGS (BEYOND WALL DRESSING OR STUCCO)

10.) ALL STEEL IN CONTACT WITH ALUMINUM TO BE PAINTED OR PLATED. COATING SHALL BE BITUMINOUS OR ASPHALTIC IN CONFORMANCE WITH FBC 2003.8.4.1.

11.) 33% INCREASE IN ALLOWABLE STRESS WAS NOT USED IN THE DESIGN OF THE FRAMING SYSTEM AND ANCHORS.

GASKET/SETTING BLOCK LIST

	PART #PG-1	70 DURO SILICONE	PRESET GASKET		PART # GSB-1	85 DURO EPDM	SETTING BLOCK FOR 1-3/8" GLASS
	PART #HA-132	70 DURO EPDM	MULLION SEAL GASKET		PART # GSB-2	85 DURO EPDM	SETTING BLOCK FOR INTERMEDIATE HORIZ. 1-3/8" GLASS
	PART #WG-1	70 DURO EPDM	WEDGE GASKET		PART # GSB-3	85 DURO EPDM	SETTING BLOCK FOR 9/16" GLASS
	PART #BG-1	70 DURO EPDM	ROLL-ON BULB GASKET		PART # GSB-4	85 DURO EPDM	SETTING BLOCK FOR INTERMEDIATE HORIZ. 9/16" GLASS
	PART #HA-114	70 DURO SILICONE	AIR SEAL BULB GASKET				
	PART #BJF-1	70 DURO EPDM	9/16" GLASS BUTT JOINT FILLER				
	PART #BJF-2	70 DURO EPDM	1 3/8" BUTT JOINT FILLER		PART # PVC-1	RIGID PVC	
	PART #FG-1	70 DURO SILICONE	RAINSCREEN FLIPPER GASKET		PART # HS-104		
	PART #HA-108	70 DURO SILICONE	AIR SEAL BULB GASKET				9/16" GLASS BUTT JOINT FILLER
	PART #HA-103	70 DURO SILICONE	AIR SEAL BULB GASKET				1 3/8" BUTT JOINT FILLER

ABBREVIATIONS

R.O. = ROUGH OPENING
O.A.F. = OVERALL FRAME
D.L.O. = DAYLITE OPENING
GL. GLASS
L.M.I. = LARGE MISSILE IMPACT
S.M.I. = SMALL MISSILE IMPACT
OPP. = OPPOSITE
MAX. = MAXIMUM
MIN. = MINIMUM
CONC. = CONCRETE

FOR CAPTURED SYSTEM ELEVATIONS, SEE PAGE 3
FOR STRUCTURALLY GLAZED ELEVATIONS, SEE PAGE 4

FOR MIAMI-DADE CO. B.C.C.O.

PRODUCT REVISED
as complying with the Florida Building Code
Acceptance No 14-0527.02
Expiration Date June 3, 2019
By Manuel Cerezo
Miami Dade Product Control

enclos corp
2770 Blue Water Road
Eagan, MN 55121-1400
Tel. 651-796-6100 • Fax 651-994-6360
Engineering Locations
Eagan, MN • Montreal, QC, CA • Moncton, NB, CA
St. Louis, MO • Manila, PH

REVISIONS

SEAL: WILLIAM D. COOK LICENSE No 43904 STATE OF FLORIDA PROFESSIONAL ENGINEER
AUG 13 2014
Retained For Structural Integrity Only

BROMLEY - COOK ENGINEERING, INC.
STRUCTURAL ENGINEERING SERVICES
5440 N.W. 33RD AVENUE SUITE 1900
FORT LAUDERDALE, FLORIDA 33309
TEL: (954) 772-4624 FAX: (954) 772-4634
CERT. OF AUTH. #00009124
WILLIAM D. COOK P.E.
FLA P.E. # 43904
FLA S.I. # 2008

Date	Scale
8/13/14	

Drawing No. 7030TSLMI

Drawing Title: 7030 SERIES CURTAIN WALL TWIN SPAN LARGE MISSILE IMPACT

Sheet No. 1/31

BILL OF MATERIALS

1. N/A
2. N/A
3. A36 STEEL BAR 1/4" x 5" (PAINTED FOR PROTECTION)
4. N/A
5. A36 STEEL BAR 5/8" x 5" (PAINTED FOR PROTECTION)
6. N/A
7. N/A
8. N/A
9. A36 STEEL TUBE 2" x 2" x 1/4"
10. ANTI-BUCKLING CLIPS 4" LONG, @ 6" FROM TOP & BOTTOM AND 24" O.C. MAX (6063-T6 ALUM.)
11. 1/4-20 x 3/4" GRADE 5 ZINC PLATED HWH TAPTITE SCREWS (@ HORIZONTAL RAILS U.N.O.)
12. 1/4-20 x 3/4" GRADE 5 ZINC FH PLATED TAPTITE SCREWS (2) PER HORIZONTAL RAIL
13. #14 x 1 1/2" HWH SMS TYPE A @ HORIZONTAL RAILS (LOCATION VARIES)
14. #14 x 1 1/2" HWH SMS TYPE A @ HORIZONTAL RAILS
15. #14 x 1 1/2" FL HD SMS TYPE A @ HORIZONTAL RAILS
16. 1/4-20 x 3/4" GRADE 5 ZINC PLATED FH TAPTITE SCREWS
17. 1/4-20 x 1" GRADE 5 ZINC PLATED HWH TAPTITE SCREWS
18. #10-16 x 3/4" HWH DRIL-FLEX
19. #10 x 1 1/4" FH SMS
20. 3/8-16 x 1 1/2" FH GRADE 5 BOLTS, TACK WELDED TO STEEL BAR W/WASHERS & LOCKNUTS @ 36" O.C.
21. #14 x 1" FH SMS, (2) PER ANCHOR, SEAL HEADS
22. 1/4-20 x 3/4" HWH DRIL-FLEX
23. #10 x 3/4" FH SMS
24. 3/8-16 x 1" GRADE 5 ZINC PLATED HWH TAPTITE SCREWS
25. 1/4-20 x 1 1/4" GRADE 5 ZINC PLATED HWH TAPTITE SCREWS
26. SEALANT & BACKER ROD DOW CORNING 790, 791, 795 SILICONE
27. 3/8" DIA WEEP HOLES @ 1/4 PTS.
28. 3/8" DIA WEEP HOLES @ 1/3 PTS.
29. 3/16" DP. x 3/8" LONG NOTCH @ 1/3 PTS.
30. STRUCTURAL SEALANT DOW CORNING 983 OR 995
31. STRUCTURAL SEALANT DOW CORNING 983 OR 995
32. N/A
33. 6 1/2" x 4 1/4" x 1/4" EXTRUDED ALUM. ANGLE (# 41035) 6063-T6
34. 5" X 4 1/4" x 1/4" EXTRUDED ALUM. TEE (# 41036) 6063-T6
35. 1/4" x 1/2" NORTON TAPE (ADHESIVE TWO SIDES)
36. ACCESS NOTCH AT FASTENERS
37. ACCESS HOLES AT FASTENERS
38. SHIMS AS REQUIRED (HIGH STRENGTH STRUCTURAL PLASTIC SHIM)
39. 1/4-20 x 1 1/2" GRADE 5 ZINC PLATED FH TAPTITE SCREWS
40. 3/8-16 x 1 1/2" GRADE 5 ZINC PLATED HWH TAPTITE SCREWS
41. 1/2-13 x 2" GRADE 5 ZINC PLATED HWH TAPTITE SCREWS
42. 1" X 5/8" X 1/8" ALUM. ANGLE (6063 T-6)
43. SILICONE BOOT, 3" LONG, ACROSS MULLION JOINTS
44. #10 x 5/8" LOW PROFILE FH SMS
45. N/A
46. N/A
47. N/A
48. N/A
49. N/A
50. 3/8-16 x 2" GRADE 5 FH BOLTS, TACK WELDED TO STEEL BAR W/ WASHERS & LOCKNUTS @ 36" O.C.
51. #10 x 5/8" HWH SMS
52. 1/4-20 x 2" HWH SMS TYPE A
53. 3/16" x 1/2" LG. WEEP SLOTS @ 1/4 PTS.
54. 6" x 3 1/2" x 1/4" THK. A36 STEEL ANGLE
55. #14 x 3/4" FH SMS
56. 1/4-20 x 1" HWH DRILL-FLEX
57. 3/8" DIA WEEP CHECK VALVE
58. A36 STEEL BAR 5/8" x 5" (PAINTED FOR PROTECTION)
59. END DAM, 4"x 6"x .060" THK. FORMED ALUMINUM
60. 3/8-16 x 1" GRADE 5 HEX HD BOLT, WASHER, & LOCKNUT
61. 1/2-13 x 1 3/4" GRADE 5 HEX HD CAP SCREW, WASHERS, & LOCKNUT
62. 1/2-13 x 2" GRADE 5 HEX HD CAP SCREW, WASHERS, & LOCKNUT
63. 1/4-20 x 1/2" GRADE 5 ZINC PLATED FL HD TAPTITE SCREW
64. 2"x 2 1/2"x 1/8" FORMED ALUMINUM ANGLE
65. IN SPANDREL AREAS, 2 1/2" ABOVE AND BELOW HORIZONTAL RAILS & 36" O.C MAX.
66. 3/4" x 3/4" TRIANGULAR ALUMINUM SCREW BLOCK 1" LONG AT HEAD RAIL SCREW POCKETS.
67. 1/2-13 x 1" GRADE 5 ZINC PLATED HWH TAPTITE SCREWS
68. SEAL FASTENER HEADS
69. EXTRUDED ALUMINUM SNAP-IN POCKET CLOSURE
70. 1/2"ø HWH POWER BOLTS, (2) PER ANCHOR
71. EXTRUDED ALUMINUM SPLICE/LIFT LUG
72. 1 1/8" DIA x 1/4" THK ALUMINUM WASHER
73. 1/2"ø (M12) GR 8.8 HI-TENSILE TEE BOLT & NUT FOR HALFEN SERIES ANCHOR CHANNELS
74. 1/2"ø HWH POWER BOLTS (2) PER ANCHOR
75. 1/2-13 x 1 1/2" GRADE 5 ZINC PLATED HWH TAPTITE SCREWS
76. 3/8"ø HWH POWER BOLTS, (2) PER ANCHOR
77. 3/8"ø HWH POWERS CO. WEDGE BOLTS, (2) PER ANCHOR
78. 3/8"ø HWH POWERS CO. WEDGE BOLTS, (2) PER ANCHOR
79. 3/8-16 x 3" GRADE 5 ZINC PLATED HWH TAPTITE SCREWS
80. 1/4-20 x 1" GRADE 5 ZINC PLATED FH TAPTITE SCREWS
81. N/A
82. 5/8"ø (M14) GRADE 8.8 HI-TENSILE TEE BOLT FOR HALFEN 5030HTA SERIES ANCHOR CHANNELS
83. 1/4" THK x 1 9/16" SQ EXTRUDED ALUMINUM SERRATED WASHER
84. 1/4-20 x 1 1/2" HWH DRILL-FLEX
85. 1/2-13 x 5" GRADE 5 HEX HD BOLT, WASHERS, & LOCKNUT
86. 1/2-13 x 1 1/2" GRADE 5 HEX HD CAP SCREW, WASHERS, & LOCKNUT
87. 3/8"ø GRADE 5 HWH POWER BOLT
88. STEEL BAR 3/8" x 5 1/2" (PAINTED FOR PROTECTION)
89. 1/2-13 x 3" GRADE 5 HEX HD BOLT, WASHER, & LOCKNUT
90. 3/8-16 x 2" GRADE 5 ZINC PLATED HWH TAPTITE SCREW
91. 1/2"ø HWH POWERS CO. WEDGE BOLTS (2) PER ANCHOR
92. 1/2"ø HWH POWERS CO. WEDGE BOLTS (2) PER ANCHOR
93. 1/4-20 x 1" GRADE 5 ZINC PLATED FHMS WITH NYLON LOCK-NUT & FLAT WASHER
94. HALFEN EMBED. MUST BE ENGINEERED FOR SUBSTRATE CONDITIONS.
95. ALUM ANGLE (6061-T6) 4" x 1" x 1/4" THK. 7/8" LONG

FOR MIAMI-DADE CO. B.C.C.O.

PRODUCT REVISED
as complying with the Florida Building Code
Acceptance No 14-0527.07
Expiration Date June 3, 2019
By Manuel Perez
Miami Dade Product Control

enclos corp

2770 Blue Water Road
Eagan, MN 55121-1400
Tel. 651-796-6100 • Fax 651-994-6360

Engineering Locations
Eagan, MN • Montreal, QC, CA • Moncton, NB, CA
St. Louis, MO • Manila, PH

REVISIONS

WILLIAM D. COOK LICENSE No 43904 STATE OF FLORIDA PROFESSIONAL ENGINEER
SEAL: AUG 13 2014
Reviewed For Structural Integrity Only

BROWLEY - COOK ENGINEERING, INC.
STRUCTURAL ENGINEERING SERVICES
5440 N.W. 33RD AVENUE SUITE 100
FORT LAUDERDALE, FLORIDA 33309
TEL: (954) 772-4524 FAX: (954) 772-4
CERT. OF AUTH. #00009124
WILLIAM D. COOK P.E.
FLA P.E. # 43904
FLA S.I. # 2008

Date	Scale
8/13/14	

Drawing No.
7030TSLMI

Drawing Title
7030 SERIES CURTAIN WALL
TWIN SPAN
LARGE MISSILE IMPACT

Sheet No.
2/31

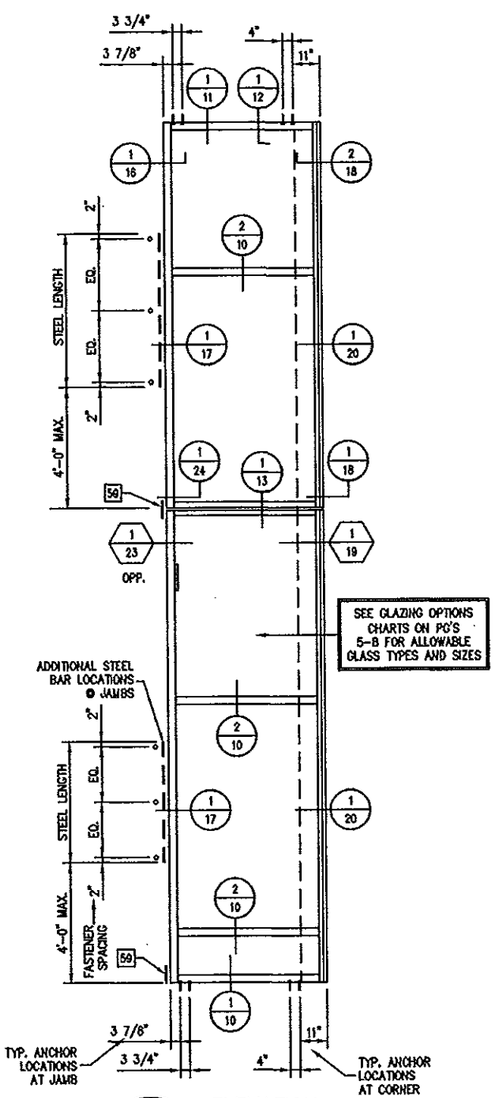

1/3 ELEVATION
CAPTURED (W/ FACE CAPS)

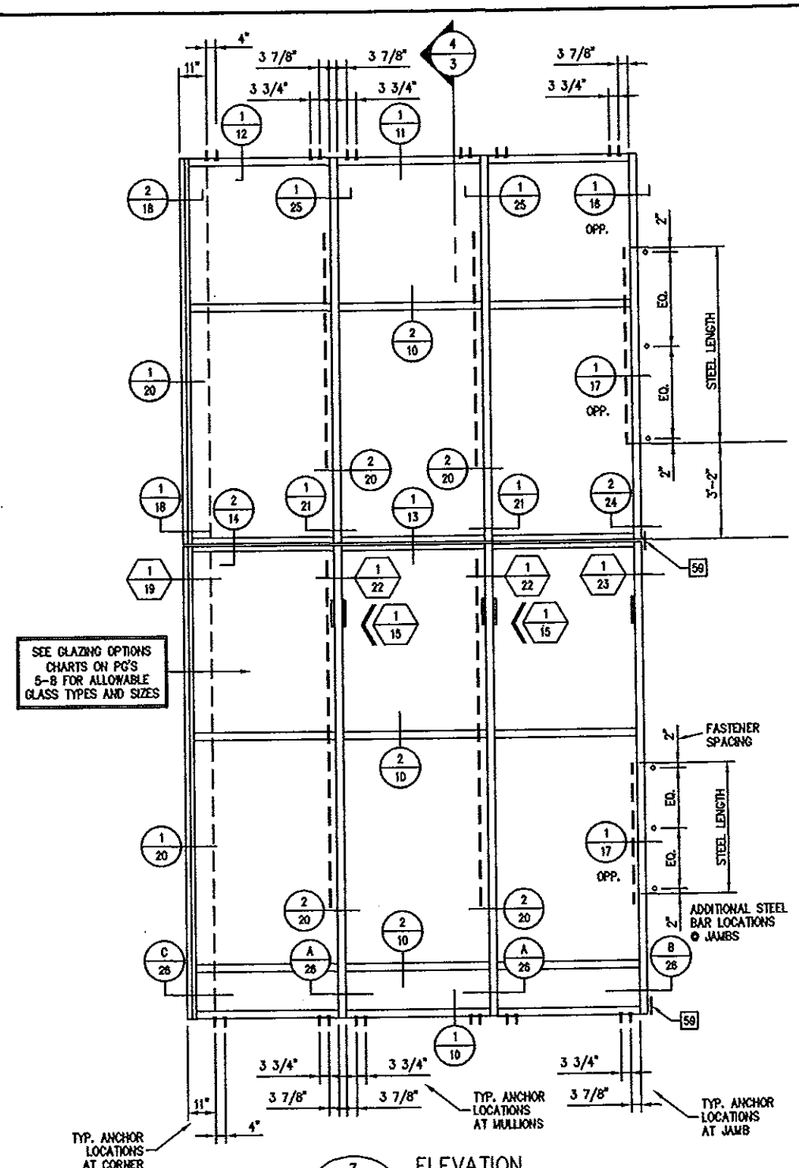

3/3 ELEVATION
CAPTURED (W/ FACE CAPS)

CAPTURED SYSTEM (W/ FACE CAPS)

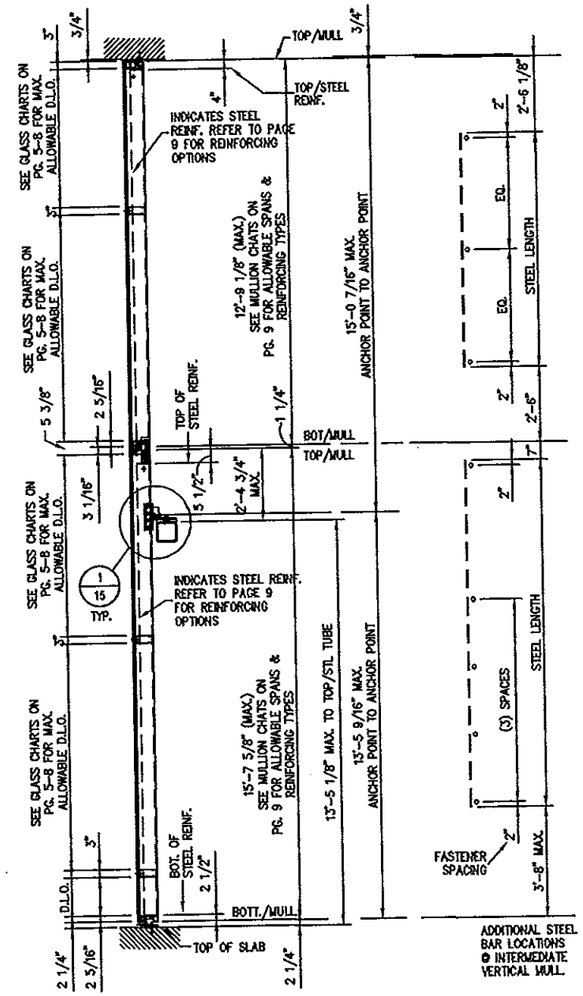

4/3 TYPICAL SECTION
CAPTURED (W/ FACE CAPS)

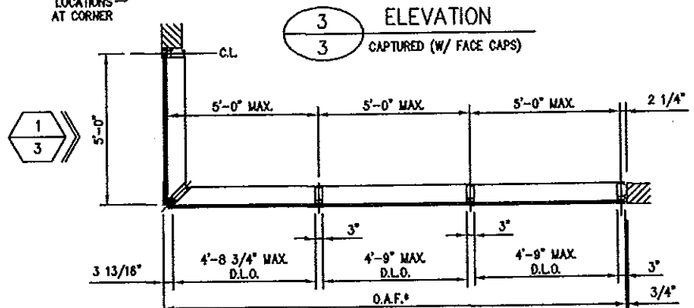

*MULTIPLE UNITS CAN BE INSTALLED SIDE BY SIDE FOR UNLIMITED OVERALL FRAME WIDTH

A/3 FLOOR PLAN

NOTES:

1: DETERMINE DESIGN WIND LOAD REQUIREMENT BASED ON WIND VELOCITY, BLDG. HEIGHT, WIND ZONE. USING APPLICABLE ASCE 7 STANDARDS.

2: SEE CHARTS ON SHEETS 5-8 FOR ALLOWABLE DESIGN LOAD CAPACITY FOR DESIRED GLASS SIZE.

3: SEE CHARTS ON SHEET 9 FOR ALLOWABLE DESIGN LOAD CAPACITY OF MULLION HEIGHTS AND MODULE WIDTHS. THE CAPACITY SHOULD EQUAL OR EXCEED THE DESIGN LOAD GIVEN FOR THE SPECIFIC PRJECT.

4: SEE CHARTS ON SHEETS 26 & 27 TO SELECT ANCHOR OPTION AND SUBSTRATE WITH CAPACITY EQUAL TO OR GREATER THAN DESIGN LOAD GIVEN FOR THE SPECIFIC PROJECT.

5. CURTAIN WALL SYSTEM IS APPROVED FOR MULTIPLE STORY INSTALLTIONS WHERE MULLION SPANS DO NOT EXCEED MAX. HEIGHTS LISTED ABOVE.

6. LOWEST VALUE OF ALL CHARTS SHALL APPLY FOR THE ENTIRE ASSEMBLY

NOTE:

FOR STRUCTURALLY GLAZED SYSTEM OPTION, SEE FLORIDA BUILDING CODE SECTION 2415 FOR REQUIREMENTS.

FOR MIAMI-DADE CO. B.C.C.O.

PRODUCT REVISED
as complying with the Florida Building Code
Acceptance No 14-0527.02
Expiration Date June 3, 2019
By Manuel Targ
Miami Dade Product Control

enclos corp
2770 Blue Water Road
Eagan, MN 55121-1400
Tel. 651-796-6100 • Fax 651-994-6360
Engineering Locations
Eagan, MN • Montreal, QC, CA • Moncton, NB, CA
St. Louis, MO • Manila, PH

REVISIONS

WILLIAM D. COOK
LICENSE
STATE OF FLORIDA
PROFESSIONAL ENGINEER
SEAL:
AUG 13 2014
Reviewed For Structural Integrity Only

BROMLEY - COOK ENGINEERING, INC.
STRUCTURAL ENGINEERING SERVICES
5440 N.W. 33RD AVENUE SUITE 100
FORT LAUDERDALE, FLORIDA 33309
TEL: (954) 772-4624 FAX: (954) 772-3635
CERT. OF AUTH. #00009124
WILLIAM D. COOK P.E.
FLA P.E. # 43904
FLA S.I. # 2038

Date	Scale
8/13/14	

Drawing No.
7030TSLMI

Drawing Title
7030 SERIES CURTAIN WALL
TWIN SPAN
LARGE MISSILE IMPACT

Sheet No.
3/31

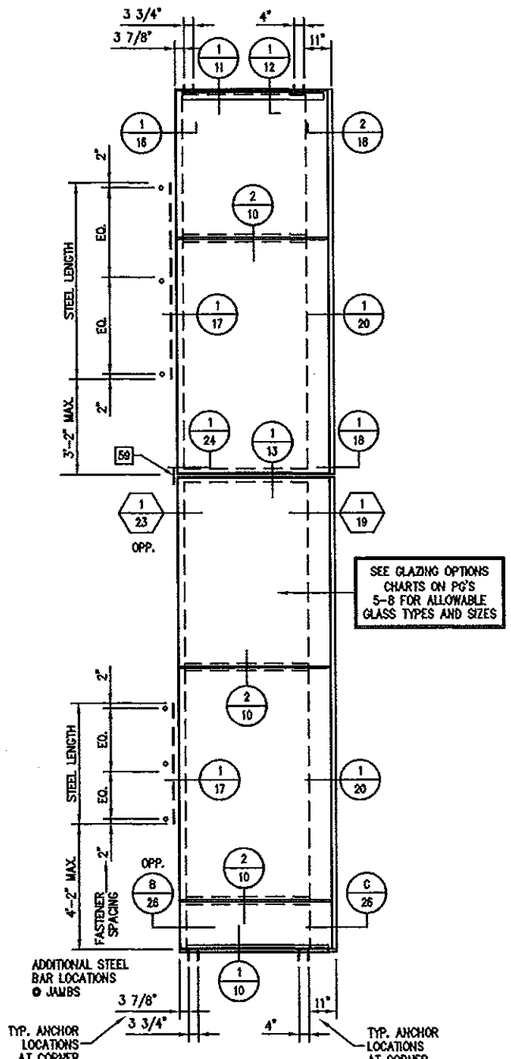

1/4 ELEVATION (STRUCTURAL SILICONE GLAZED)

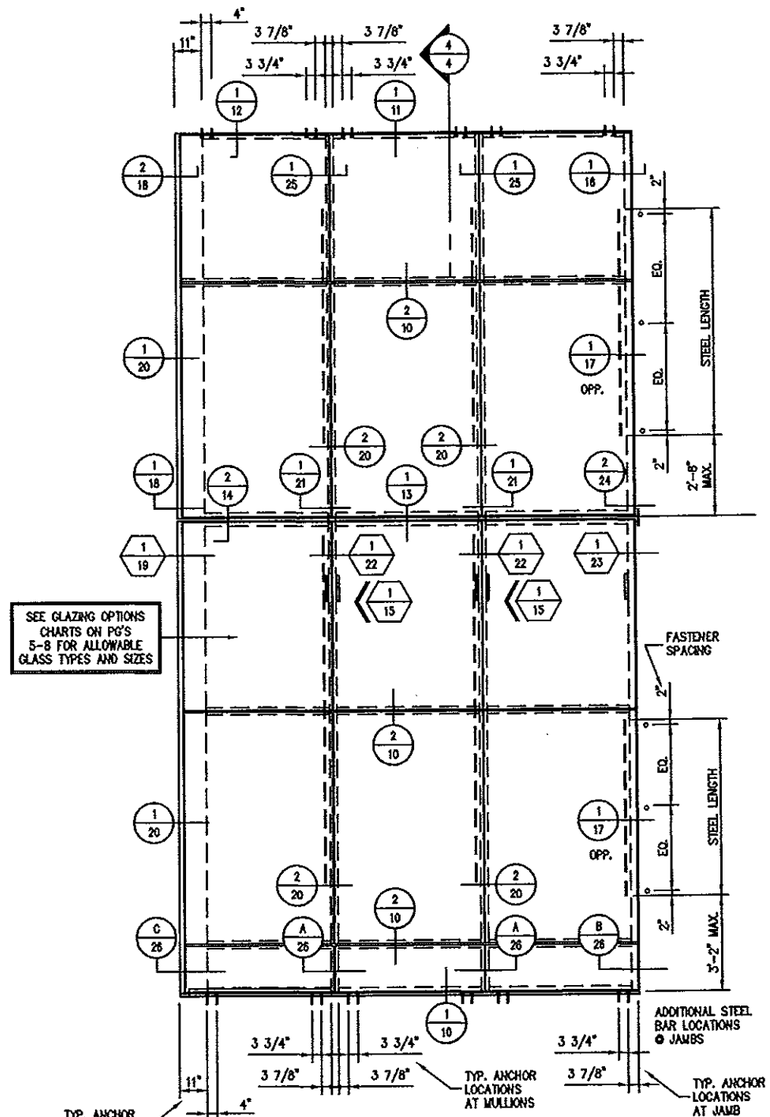

3/4 ELEVATION (STRUCTURAL SILICONE GLAZED)

STRUCTURALLY GLAZED SYSTEM (4-SIDED)

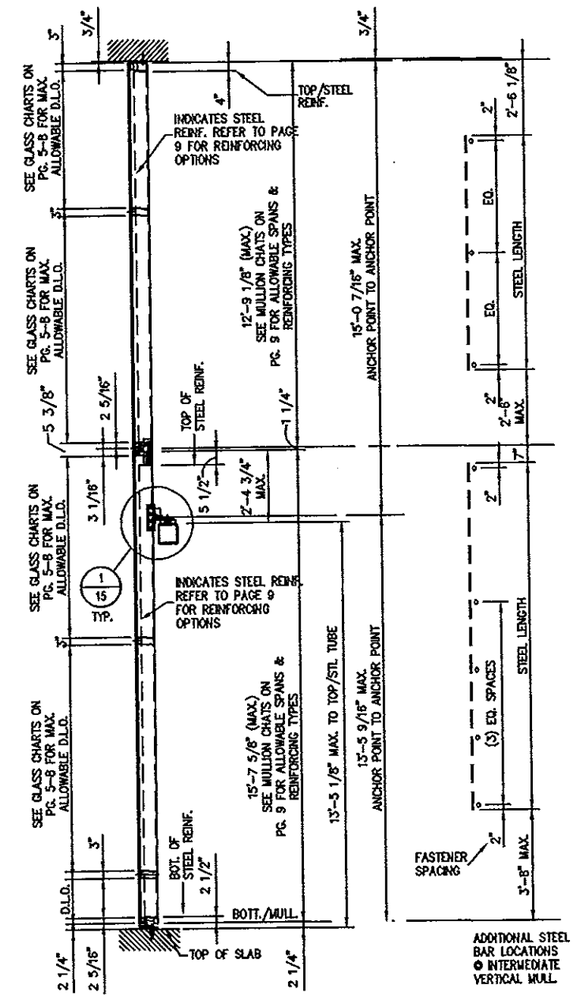

4/4 TYPICAL SECTION (STRUCTURAL SILICONE GLAZED)

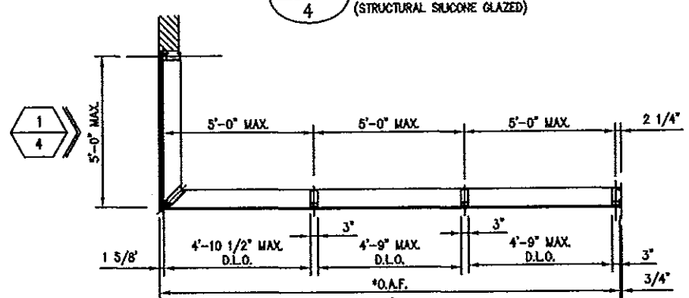

*MULTIPLE UNITS CAN BE INSTALLED SIDE BY SIDE FOR UNLIMITED OVERALL FRAME WIDTH

A/4 FLOOR PLAN

NOTES:

1: DETERMINE DESIGN WIND LOAD REQUIREMENT BASED ON WIND VELOCITY, BLDG. HEIGHT, WIND ZONE. USING APPLICABLE ASCE 7 STANDARDS.

2: SEE CHARTS ON SHEETS 5-8 FOR ALLOWABLE DESIGN LOAD CAPACITY FOR DESIRED GLASS SIZE.

3: SEE CHARTS ON SHEET 9 FOR ALLOWABLE DESIGN LOAD CAPACITY OF MULLION HEIGHTS AND MODULE WIDTHS. THE CAPACITY SHOULD EQUAL OR EXCEED THE DESIGN LOAD GIVEN FOR THE SPECIFIC PRJECT.

4: SEE CHARTS ON SHEETS 26 & 27 TO SELECT ANCHOR OPTION AND SUBSTRATE WITH CAPACITY EQUAL TO OR GREATER THAN DESIGN LOAD GIVEN FOR THE SPECIFIC PROJECT.

5. CURTAIN WALL SYSTEM IS APPROVED FOR MULTIPLE STORY INSTALLTIONS WHERE MULLION SPANS DO NOT EXCEED MAX. HEIGHTS LISTED ABOVE.

6. LOWEST VALUE OF ALL CHARTS SHALL APPLY FOR THE ENTIRE ASSEMBLY

NOTE:

FOR STRUCTURALLY GLAZED SYSTEM OPTION, SEE FLORIDA BUILDING CODE SECTION 2415 FOR REQUIREMENTS.

FOR MIAMI-DADE CO. B.C.C.O.

PRODUCT REVISED
as complying with the Florida Building Code
Acceptance No 14-0527.02
Expiration Date June 3, 2019
By Manuel Perez
Miami Dade Product Control

enclos corp

2770 Blue Water Road
Eagan, MN 55121-1400
Tel. 651-796-6100 • Fax 651-994-6380
Engineering Locations
Eagan, MN • Montreal, QC, CA • Moncton, NB, CA
St. Louis, MO • Manila, PH

REVISIONS

WILLIAM D. COOK LICENSE No 43904 STATE OF FLORIDA PROFESSIONAL ENGINEER SEAL AUG 13 2014 Reviewed For Structural Integrity Only

BROMLEY - COOK ENGINEERING, INC.
STRUCTURAL TENT ENGINEERING SPECIALISTS
5440 N.W. 33RD AVENUE SUITE-100
FORT LAUDERDALE, FLORIDA 33309
TEL: (954) 772-4624 FAX: (954) 772-4634
CERT. OF AUTH. #00009124
WILLIAM D. COOK P.E.
FLA P.E. # 43904
FLA S.I. # 2008

Date	Scale
8/13/14	

Drawing No. 7030TSLMI

Drawing Title: 7030 SERIES CURTAIN WALL
TWIN SPAN
LARGE MISSILE IMPACT

Sheet No. 4/31

CAPTURED SYSTEM (9/16" GLASS)

MAX. DESIGN PRESSURES (P.S.F.) FOR VARIOUS GLASS TYPES

GLASS WD. (W) D.L.O.	GLASS HGT. (H) D.L.O.	GLASS TYPES (MONOLITHIC LAMINATED - LARGE MISSILE IMPACT)					
		A	A1	E	C1	N	
42" 48" 52" 54" 57"	72"	+110, -130	+110, -130	+90, -90	+110, -130	+110, -130	
						+110, -130	
42" 48" 52" 54" 57"	78"						
42" 48" 52" 54" 57"	84"						
42" 48" 52" 54" 57"	90"						
		+110, -130	+110, -130	+90, -90	+110, -130		
42" 48" 52" 54" 57"	102"	+90, -90					
42" 48" 52" 54" 57"	114"						
		+90, -90					

TESTED GLASS (MONOLITHIC):

A	57" X 92" 57" X 114"	+90 / -143 +90 / -90
E	57" X 90"	+90 / -90
N	57" X 72"	+110 / -130
A1	57" X 90"	+110 / -130
C1	57" X 90"	+110 / -130

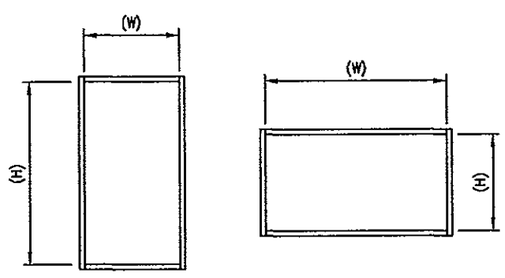

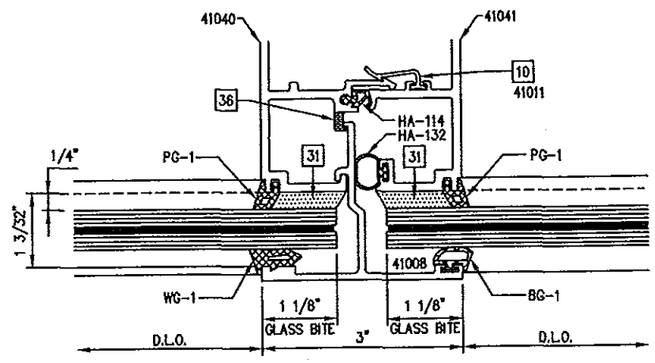

1/5 GLAZING DETAIL
9/16" CAPTURED GLASS
@ TYP. VERTICAL MULLION

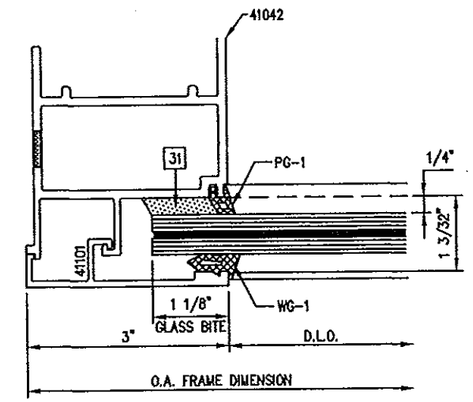

2/5 GLAZING DETAIL
9/16" CAPTURED GLASS @ JAMB

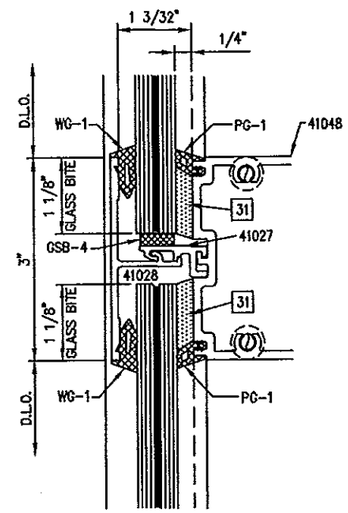

3/5 GLAZING DETAIL
9/16" CAPTURED GLASS
@ INTERMEDIATE HORIZONTAL

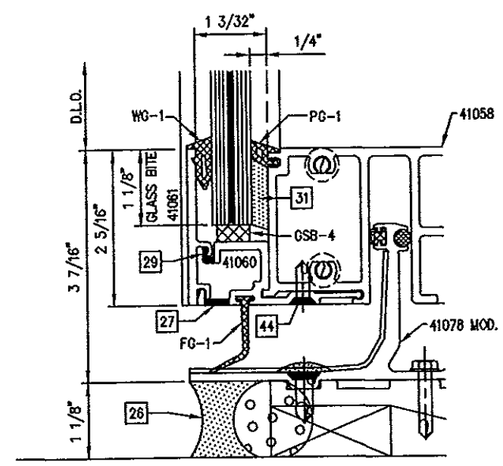

4/5 GLAZING DETAIL
9/16" CAPTURED GLASS @ TYP. SILL

FOR MIAMI-DADE CO. B.C.C.O.

PRODUCT REVISED
as complying with the Florida
Building Code
Acceptance No 14-0527.02
Expiration Date June 3, 2019
By Manuel Perez
Miami/Dade Product Control

enclos corp
2770 Blue Water Road
Eagan, MN 55121-1400
Tel. 651-796-6100 • Fax 651-994-6300
Engineering Locations
Eagan, MN • Montreal, QC, CA • Moncton, NB, CA
St. Louis, MO • Manila, PH

REVISIONS

WILLIAM D. COOK LICENSE SEAL No 43904 STATE OF FLORIDA PROFESSIONAL ENGINEER

Reviewed For Structural Integrity Only.

BROMLEY - COOK ENGINEERING, INC.
STRUCTURAL ENGINEERING SERVICES
5440 N.W. 33RD AVENUE SUITE 100
FORT LAUDERDALE, FLORIDA 33309
TEL: (954) 772-4624 FAX: (954) 772-4634
CERT. OF AUTH. #00009124
WILLIAM D. COOK P.E.
FLA. P.E. # 43904
FLA S.L. # 2008

Date	Scale
8/13/14	

Drawing No.
7030TSLMI

Drawing Title
7030 SERIES CURTAIN WALL
TWIN SPAN
LARGE MISSILE IMPACT

Sheet No.
5/31

STRUCTURALLY GLAZED SYSTEM (9/16" GLASS)

MAX. DESIGN PRESSURES (P.S.F.) FOR VARIOUS GLASS TYPES					
GLASS WD. (W) D.L.O.	GLASS HGT. (H) D.L.O.	GLASS TYPES (MONOLITHIC LAMINATED – L.M.I.)			
		A	At	N	
42" 48" 52" 54" 57"	72"	+90, −90	+110, −130	+110, −130 / +110, −130	
42" 48" 52" 54" 57"	78"				
42" 48" 52" 54" 57"	84"				
42" 48" 52" 54" 57"	90"	+90, −90	+110, −130		

TESTED GLASS (MONOLITHIC):		
A	57" X 90"	+90 / −90
N	57" X 72"	+110 / −130
At	57" X 90"	+110 / −130

SILICONE JOINT WIDTH REQ'D. FOR STRUCTURAL GLAZING			
GLASS WIDTH (D.L.O. MAX.)	WIND PRESSURE (MAX.)	JOINT DEPTH X WIDTH (MIN.)	MULLION WIDTH REQ'D. (MIN.)
40"	130	1/4" X 7/8"	STANDARD 3" WIDE MULLION
44"	120	1/4" X 7/8"	STANDARD 3" WIDE MULLION
48"	110	1/4" X 7/8"	STANDARD 3" WIDE MULLION
52"	100	1/4" X 7/8"	STANDARD 3" WIDE MULLION
57"	90	1/4" X 7/8"	STANDARD 3" WIDE MULLION
57"	130	1/4" X 1 3/8"	4" WIDE MULLION

DOW CORNING 983 OR 995 STRUCTURAL SILICONE SEALANT STRUCTURAL SILICONE BEAD [31] SHALL BE 7/8" x 1/4" OR 1/4" x 1 3/8" AS NOTED ABOVE

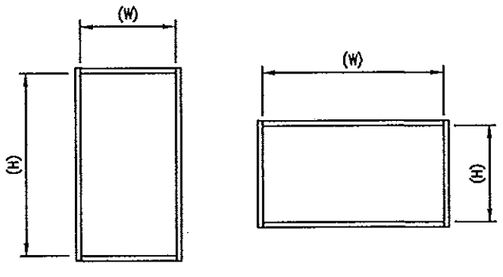

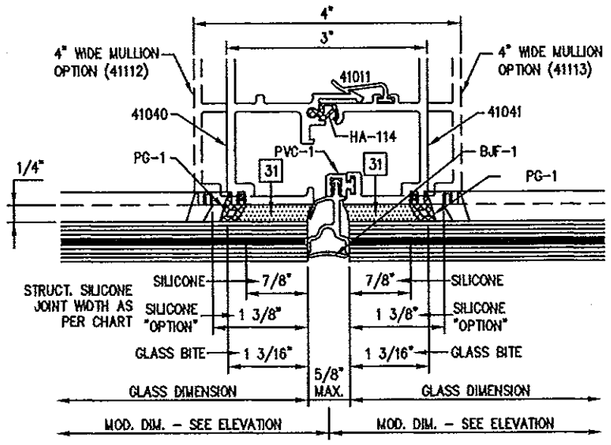

1/6 GLAZING DETAIL (BUTT JOINT W/ GASKET)
9/16" STRUCTURALLY GLAZED
@ TYP. VERTICAL MULLION

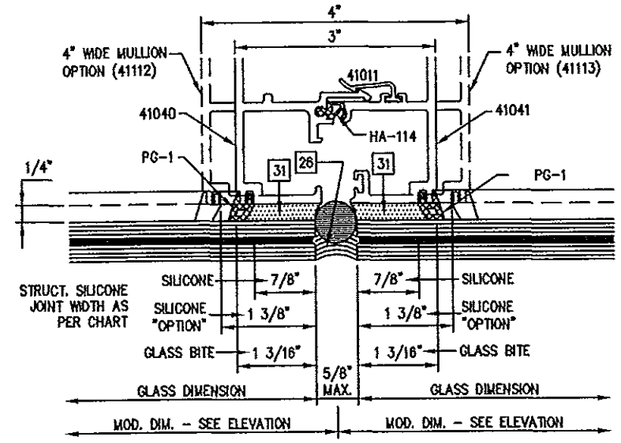

2/6 GLAZING DETAIL (SILICONE BUTT JOINT)
9/16" STRUCTURALLY GLAZED
@ TYP. VERTICAL MULLION

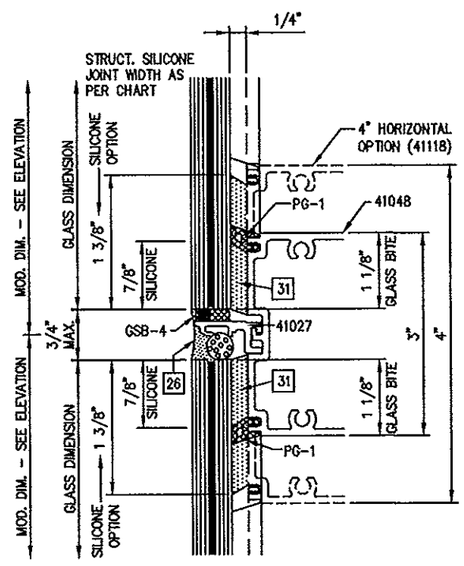

3/6 GLAZING DETAIL
9/16" STRUCTURALLY GLAZED
@ INTERMEDIATE HORIZONTAL

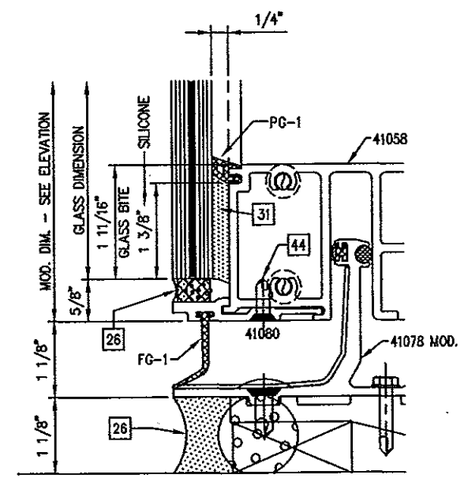

4/6 GLAZING DETAIL
9/16" STRUCTURALLY GLAZED @ TYP. SILL

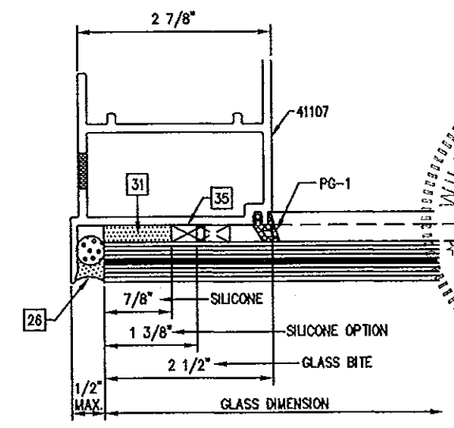

5/6 GLAZING DETAIL
9/16" STRUCTURALLY GLAZED @ JAMB

FOR MIAMI-DADE CO. B.C.C.O.

PRODUCT REVISED
as complying with the Florida Building Code
Acceptance No 14-0527.02
Expiration Date June 3, 2019
By Manuel Saez
Miami Dade Product Control

enclos corp
2770 Blue Water Road
Eagan, MN 55121-1400
Tel. 651-796-6100 • Fax 651-994-6380
Engineering Locations
Eagan, MN • Montreal, QC, CA • Moncton, NB, CA
St. Louis, MO • Manila, PH

REVISIONS

SEAL: WILLIAM D. COOK No 43904 STATE OF FLORIDA PROFESSIONAL ENGINEER
AUG 13 2014
Reviewed For Structural Integrity Only

BROMLEY - COOK ENGINEERING, INC.
STRUCTURAL ENGINEERING SERVICES
5440 N.W. 33RD AVENUE SUITE 105
FORT LAUDERDALE, FLORIDA 33309
TEL: (954) 772-4624 FAX: (954) 772-4634
CERT. OF AUTH. #00009124
WILLIAM D. COOK P.E.
FLA. P.E. # 43904
FLA. SL. # 2008

Date	Scale
8/13/14	

Drawing No.
7030TSLMI

Drawing Title
7030 SERIES CURTAIN WALL
TWIN SPAN
LARGE MISSILE IMPACT

Sheet No.
6/31

CAPTURED SYSTEM (1 3/8" GLASS)

MAX. DESIGN PRESSURES (P.S.F.) FOR VARIOUS GLASS TYPES

GLASS WD. (W) D.L.O.	GLASS HGT. (H) D.L.O.	GLASS TYPES (LAMINATED/INSULATED – LARGE MISSILE IMPACT) Bt	Dt
42" 48" 52" 54" 57"	60"	+110, −130	+110, −130
42" 48" 52" 54" 57"	72"		
42" 48" 52" 54" 57"	78"		
42" 48" 52" 54" 57"	84"		
42" 48" 52" 54" 57"	90"	+110, −130	+110, −130

TESTED GLASS (INSULATED):		
Bt	57" X 90"	+110 / −130
Dt	57" X 90"	+110 / −130

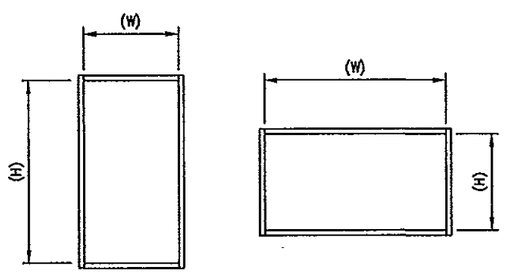

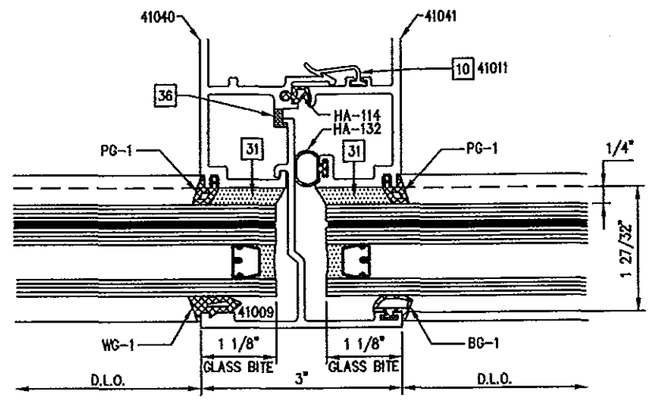

1/7 GLAZING DETAIL
1 3/8" CAPTURED GLASS
@ TYP. VERTICAL MULLION

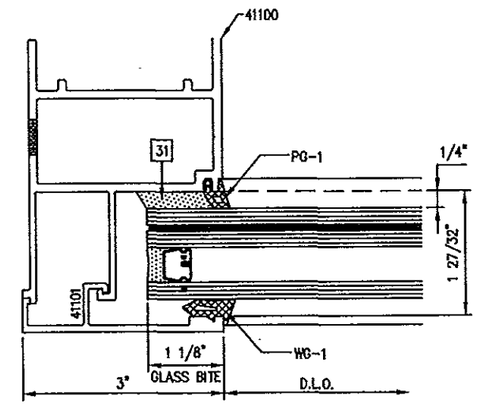

2/7 GLAZING DETAIL
1 3/8" CAPTURED GLASS @ JAMB

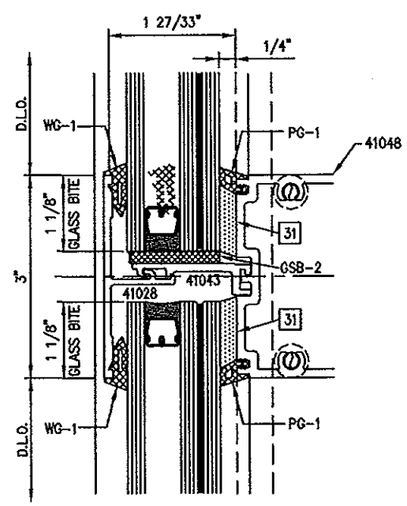

3/7 GLAZING DETAIL
1 3/8" CAPTURED GLASS
@ INTERMEDIATE HORIZONTAL

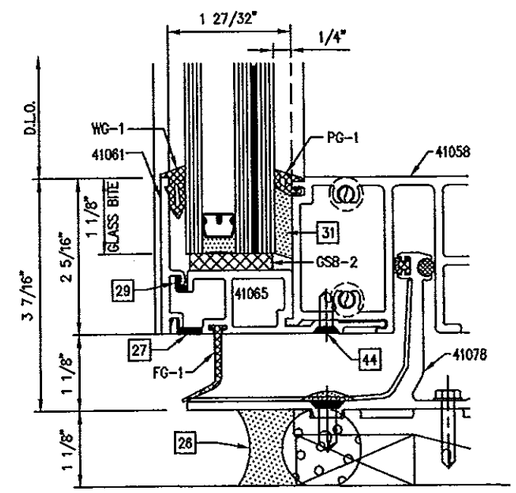

4/7 GLAZING DETAIL
1 3/8" CAPTURED GLASS
@ TYP. SILL

FOR MIAMI-DADE CO. B.C.C.O.

PRODUCT REVISED
as complying with the Florida
Building Code
Acceptance No 14-052202
Expiration Date June 3, 2019
By Manuel Perez
Miami Dade Product Control

enclos corp

2770 Blue Water Road
Eagan, MN 55121-1400
Tel. 651-796-6100 • Fax 651-994-6380
Engineering Locations
Eagan, MN • Montreal, QC, CA • Moncton, NB, CA
St. Louis, MO • Manila, PH

REVISIONS

WILLIAM D. COOK
LICENSE
No 43904
SEAL
AUG 1 3 2014
STATE OF FLORIDA
PROFESSIONAL ENGINEER
Reviewed for Structural Integrity Only

BROMLEY - COOK ENGINEERING, INC.
STRUCTURAL ENGINEERING SERVICES
5440 N.W. 33RD AVENUE SUITE 3000
FORT LAUDERDALE, FLORIDA 33309
TEL: (954) 772-4624 FAX: (954) 772-4634
CERT. OF AUTH. #00009124
WILLIAM D. COOK P.E.
FLA P.E. # 43904
FLA S.I. # 2008

Date	Scale
8/13/14	

Drawing No.
7030TSLMI

Drawing Title
7030 SERIES CURTAIN WALL
TWIN SPAN
LARGE MISSILE IMPACT

Sheet No.
7/31

STRUCTURALLY GLAZED SYSTEM (1 3/8" GLASS)

MAX. DESIGN PRESSURES (P.S.F.) FOR VARIOUS GLASS TYPES

GLASS WD. (W) D.L.O.	GLASS HGT. (H) D.L.O.	GLASS TYPES (LAMINATED/INSULATED – LARGE MISSILE IMPACT)				
		Bt	Dt			
42" 48" 52" 54" 57"	60"	+110, −130	+110, −130			
42" 48" 52" 54" 57"	72"					
42" 48" 52" 54" 57"	78"					
42" 48" 52" 54" 57"	84"					
42" 48" 52" 54" 57"	90"	+110, −130	+110, −130			

TESTED GLASS (INSULATED):		
Bt	57" X 90"	+110 / −130
Dt	57" X 90"	+110 / −130

SILICONE JOINT WIDTH REQ'D. FOR STRUCTURAL GLAZING

GLASS WIDTH (D.L.O. MAX.)	WIND PRESSURE (MAX.)	JOINT DEPTH X WIDTH (MIN.)	MULLION WIDTH REQ'D. (MIN.)
40"	130	1/4" X 7/8"	STANDARD 3" WIDE MULLION
44"	120	1/4" X 7/8"	STANDARD 3" WIDE MULLION
48"	110	1/4" X 7/8"	STANDARD 3" WIDE MULLION
52"	100	1/4" X 7/8"	STANDARD 3" WIDE MULLION
57"	90	1/4" X 7/8"	STANDARD 3" WIDE MULLION
57"	130	1/4" X 1 3/8"	4" WIDE MULLION

DOW CORNING 983 OR 995 STRUCTURAL SILICONE SEALANT
STRUCTURAL SILICONE BEAD [31] SHALL BE 7/8" x 1/4"
OR 1/4" x 1 3/8" AS NOTED ABOVE

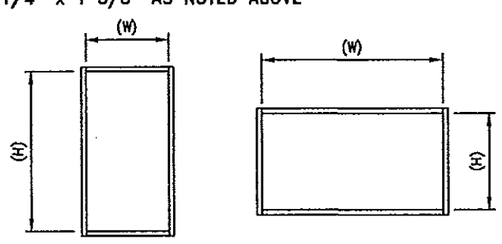

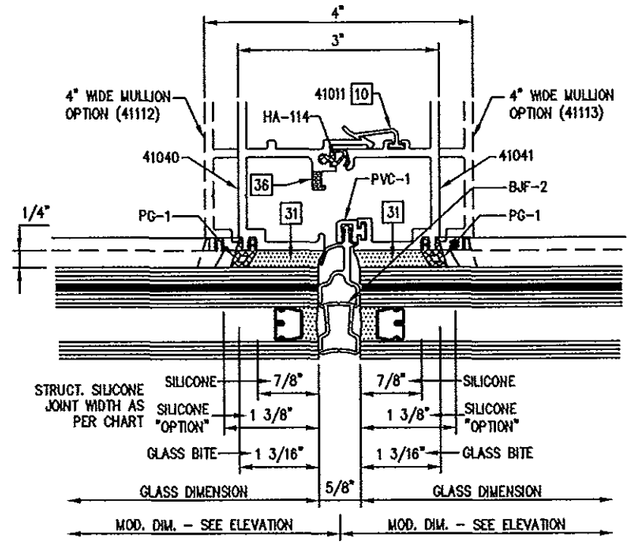

1/8 GLAZING DETAIL (BUTT JOINT W/ GASKET)
1 3/8" STRUCTURALLY GLAZED
@ TYP. VERTICAL MULLION

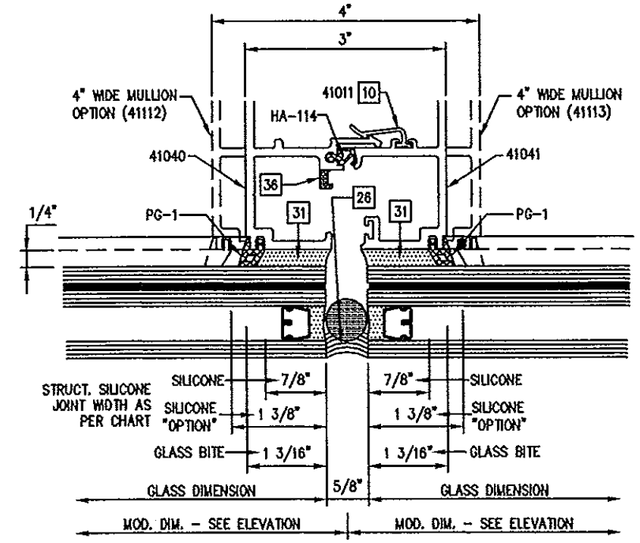

2/8 GLAZING DETAIL (SILICONE BUTT JOINT)
1 3/8" STRUCTURALLY GLAZED
@ TYP. VERTICAL MULLION

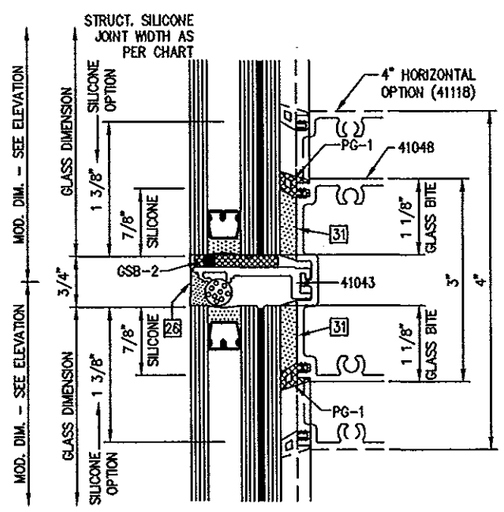

3/8 GLAZING DETAIL (SILICONE BUTT JOINT)
1 3/8" STRUCTURALLY GLAZED
@ INTERMEDIATE HORIZONTAL

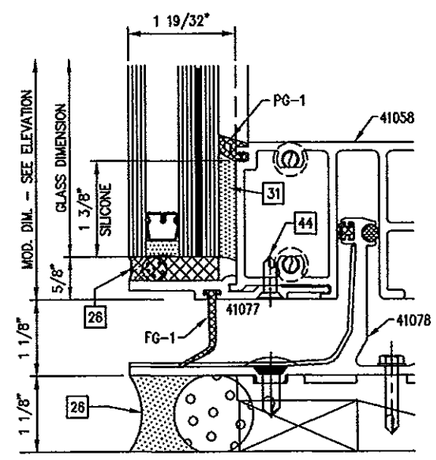

4/8 GLAZING DETAIL
1 3/8" STRUCTURALLY GLAZED
@ TYP. SILL

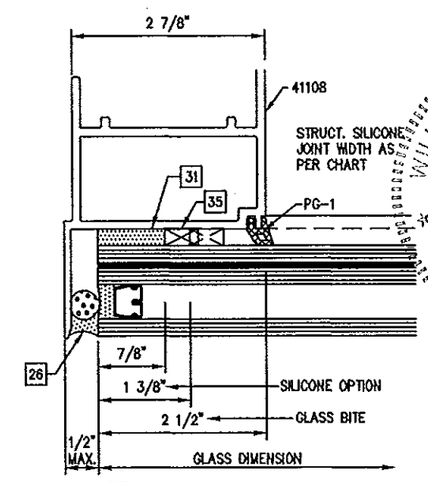

5/8 GLAZING DETAIL
1 3/8" STRUCTURALLY GLAZED @ JAMB

FOR MIAMI-DADE CO. B.C.C.O.

PRODUCT REVISED
as complying with the Florida
Building Code
Acceptance No 14-0527.02
Expiration Date June 3, 2019
By Manuel Paez
Miami Dade Product Control

enclos corp
2770 Blue Water Road
Eagan, MN 55121-1400
Tel. 651-798-6100 • Fax 651-894-6380
Engineering Locations
Eagan, MN • Montreal, QC, CA • Moncton, NB, CA
St. Louis, MO • Manila, PH

REVISIONS

WILLIAM D. COOK LICENSE 43904 STATE OF FLORIDA PROFESSIONAL ENGINEER
SEAL
AUG 13 2014
Reviewed For Structural Integrity Only

BROMLEY • COOK ENGINEERING, INC.
STRUCTURAL ENGINEERING SERVICES
5440 N.W. 33RD AVENUE SUITE 100
FORT LAUDERDALE, FLORIDA 33309
TEL: (954) 772-4824 FAX: (954) 772-4834
CERT. OF AUTH. #00009124
WILLIAM D. COOK P.E.
FLA P.E. # 43904
FLA SL # 2008

Date	Scale
8/13/14	

Drawing No.
7030TSLMI

Drawing Title
7030 SERIES CURTAIN WALL
TWIN SPAN
LARGE MISSILE IMPACT

Sheet No.
8/31

MAX. DESIGN PRESSURES (P.S.F.) FOR VARIOUS MULLION OPTIONS

MODULE WD. (W)	MULLION HT. (H)	MULLION OPTIONS				
		MULLION TYPE #1	MULLION TYPE #2	JAMB TYPE #3	JAMB TYPE #4	CORNER MULLION TYPE #5
45" 51" 55" 59" 60"	120"	+110, −130	+110, −130	+110, −130	+110, −130	+110, −130
45" 51" 55" 59" 60"	132"					
45" 51" 55" 59" 60"	144"					
45" 51" 55" 59" 60"	161 9/16"	+110, −130		+110, −130		
45" 51" 55" 59" 60"	180 7/16"	X	+110, −130	X	+110, −130	+110, −130

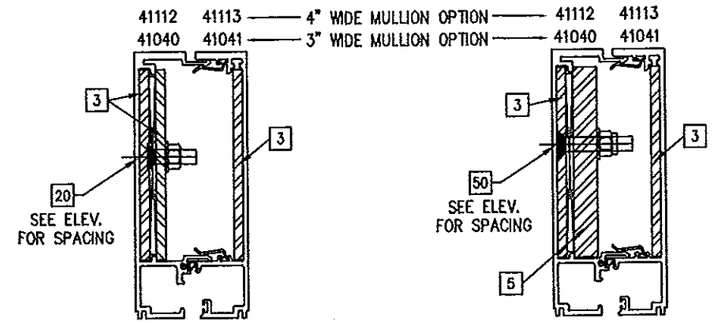

MULLION TYPE #1

3" MULLION – 41040/41041 OPTION
4" MULLION – 41112/41113 OPTION
EITHER OPTION W/ STL. REINFORCING
1/4" X 5" STEEL BAR (2 PCS. FULL LENGTH)
ADDITIONAL 1/4" X 5" BAR (1 PC.)
SEE ELEV'S FOR LOCATION

ALUMINUM Ixx = 21.627 in^4 (3" WIDE MULLION)
ALUMINUM Ixx = 51.264 in^4 (4" WIDE MULLION)

MULLION TYPE #2

3" MULLION – 41040/41041 OPTION
4" MULLION – 41112/41113 OPTION
EITHER OPTION W/ STL. REINFORCING
1/4" X 5" STEEL BAR (2 PCS.) FULL LENGTH
ADDITIONAL 5/8" X 5" STEEL BAR (1 PC.)
50% OF SPAN CENTERED IN MULLION

ALUMINUM Ixx = 21.627 in^4 (3" WIDE MULLION)
ALUMINUM Ixx = 51.264 in^4 (4" WIDE MULLION)

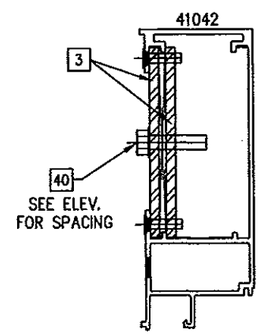

JAMB TYPE #3

41042 FOR CAPTURED GLASS OPTION (SHOWN)
41107 FOR STRUCTURALLY GLAZED OPTION
EITHER OPTION W/ STL. REINFORCING
3 (1) 1/4" X 5" STEEL BAR (FULL LENGTH)
3 (1) 1/4" X 5" STEEL BAR (SEE ELEV'S FOR LOCATION)

ALUMINUM Ixx = 20.688 in^4

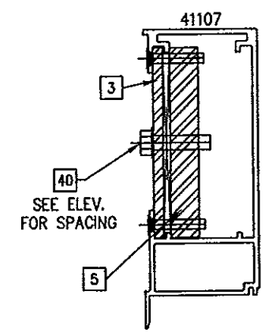

JAMB TYPE #4

41042 FOR CAPTURED GLASS OPTION
41107 FOR STRUCTURALLY GLAZED OPTION (SHOWN)
EITHER OPTION W/ STL. REINFORCING
3 1/4" X 5" STEEL BAR (FULL LENGTH)
5 5/8" X 5" STEEL BAR (50% OF SPAN CENTERED IN MULLION)

ALUMINUM Ixx = 22.125 in^4

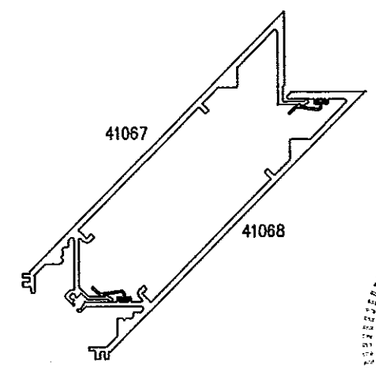

CORNER MULLION TYPE #5

41067 & 41068 WITH NO REINFORCING

ALUMINUM Ixx = 28.590 in^4

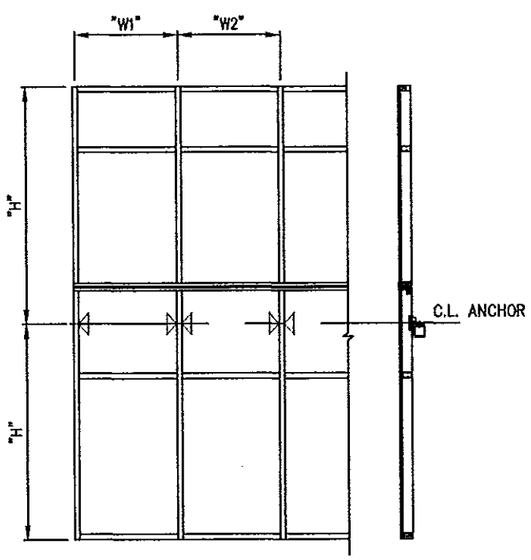

GENERAL NOTES:

- "H" = MAXIMUM MULLION SPAN
- "W1" & "W2" = C.L. TO C.L. SPACING
- JAMB "W" = $\frac{"W1"}{2}$
- MULLION "W" = $\frac{"W1" + "W2"}{2}$

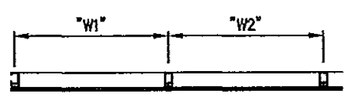

- FOR SINGLE SPAN MAXIMUM DEFL. = L/180 OR 1"
- SPANS ARE LIMITED BY MAXIMUM TESTED LENGTHS AS INDICATED ON ELEV'S AND ON SPAN CHARTS

FOR MIAMI-DADE CO. B.C.C.O.

PRODUCT REVISED
as complying with the Florida Building Code
Acceptance No 14-0527.02
Expiration Date June 3, 2019
By Manuel Perez
Miami Dade Product Control

enclos corp
2770 Blue Water Road
Eagan, MN 55121-1400
Tel 651-796-6100 • Fax 651-994-6360
Engineering Locations
Eagan, MN • Montreal, QC, CA • Moncton, NB, CA
St. Louis, MO • Manila, PH

REVISIONS

WILLIAM D. COOK LICENSE No 43904 STATE OF FLORIDA PROFESSIONAL ENGINEER
SEAL:
AUG 13 2014
Reviewed For Structural Integrity Only

BROMLEY • COOK ENGINEERING, INC.
STRUCTURAL ENGINEERING SERVICES
5440 N.W. 33RD AVENUE SUITE 100
FORT LAUDERDALE, FLORIDA 33309
TEL: (954) 772-4624 FAX: (954) 772-4625
CERT. OF AUTH. #00009124
WILLIAM D. COOK P.E.
FLA P.E. # 43904
FLA S.I. # 2008

Date	Scale
8/13/14	

Drawing No.
7030TSLMI

Drawing Title
7030 SERIES CURTAIN WALL
TWIN SPAN
LARGE MISSILE IMPACT

Sheet No.
9/31

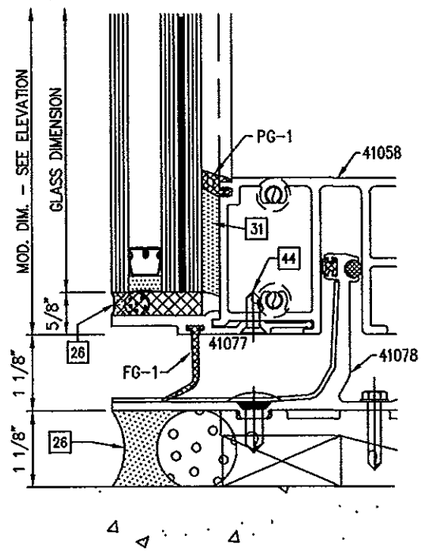

1/10 SILL DETAIL
9/16" STRUCTURALLY GLAZED GLASS OPTION

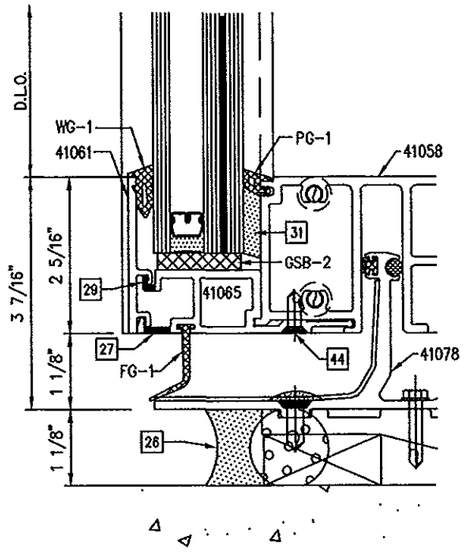

1/10 SILL DETAIL
1 3/8" CAPTURED GLASS OPTION

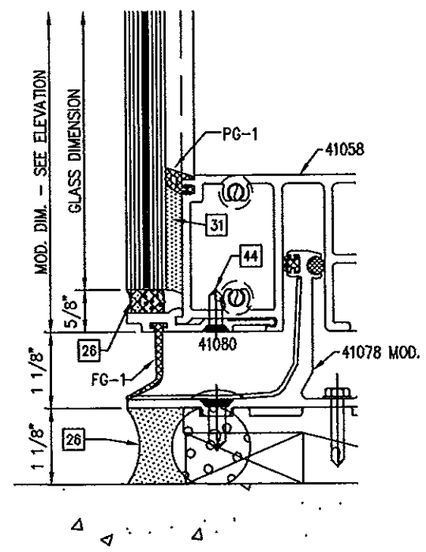

1/10 SILL DETAIL
9/16" STRUCTURALLY GLAZED GLASS OPTION

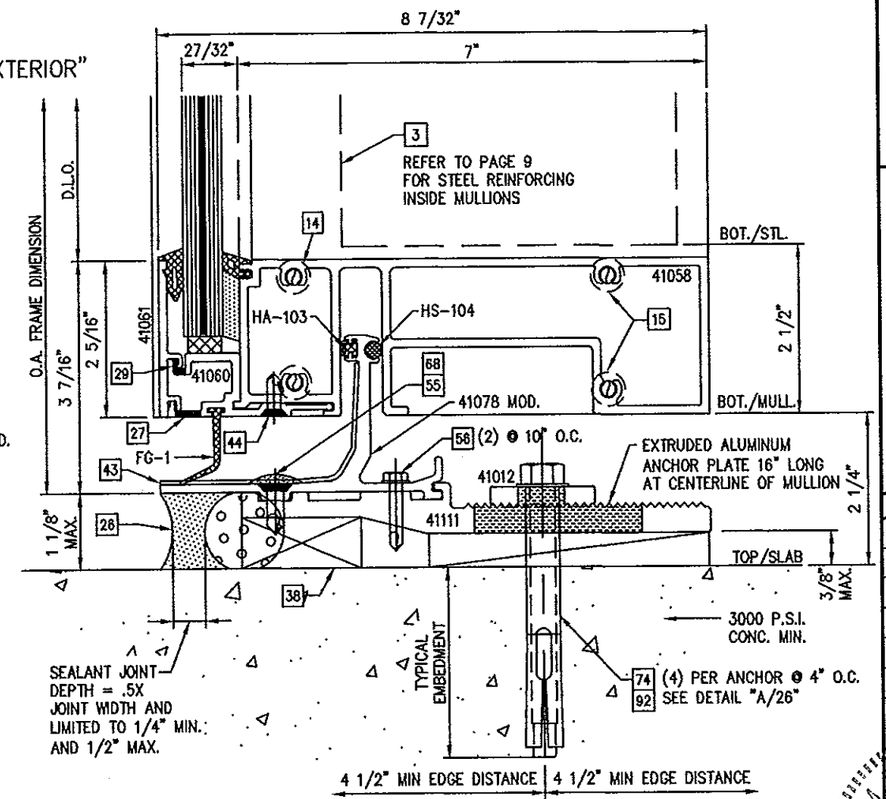

1/10 SILL DETAIL
9/16" CAPTURED GLASS

ALTERNATE PERIMETER SEALANT TYPES AND JOINT SIZES SHALL BE DESIGNED AND APPROVED BY DESIGN PROFESSIONAL OF RECORD AND OR THE SEALANT MANUFACTURER

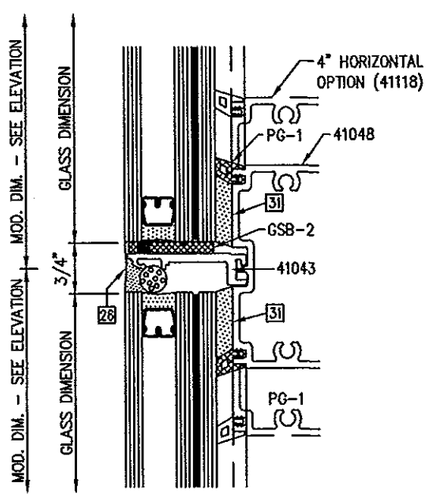

2/10 INTERMEDIATE HORIZ. DETAIL
1 3/8" STRUCTURALLY GLAZED GLASS OPTION

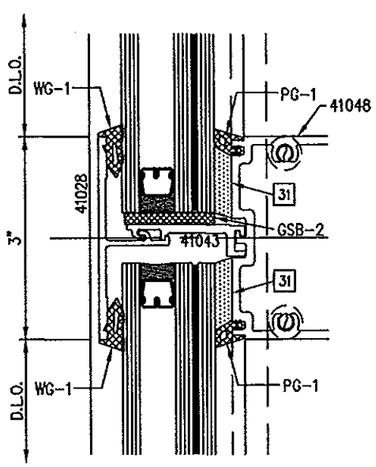

2/10 INTERMEDIATE HORIZ. DETAIL
1 3/8" CAPTURED GLASS OPTION

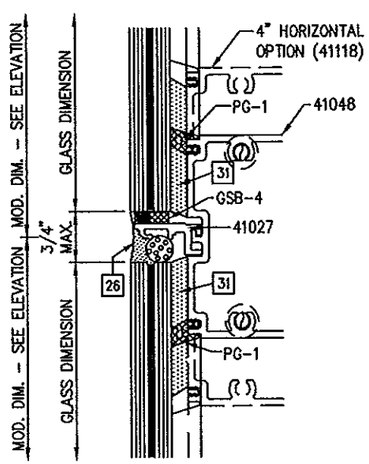

2/10 INTERMEDIATE HORIZ. DETAIL
9/16" STRUCTURALLY GLAZED GLASS OPTION

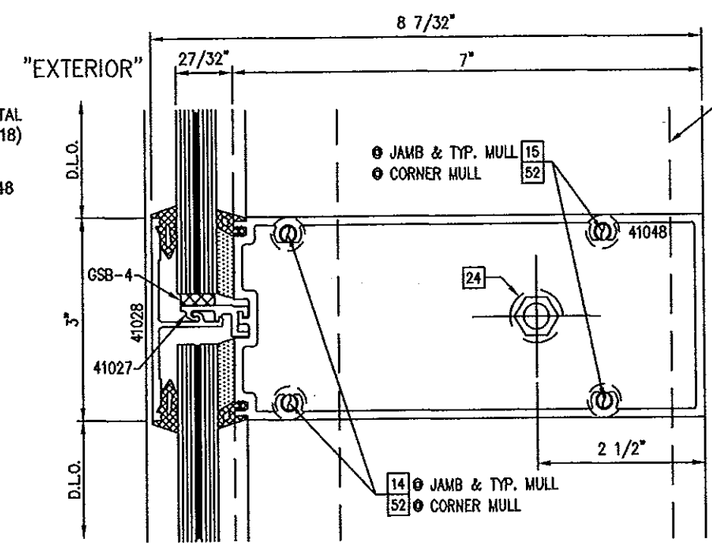

2/10 INTERMEDIATE HORIZ. DETAIL
9/16" CAPTURED GLASS

REFER TO PAGE 26
FOR ALLOWABLE ANCHOR
TYPES & SUBSTRATES

PERIMETER SEALANT OPTIONS:
DOW-CORNING 790 SILICONE
DOW-CORNING 791 SILICONE
DOW-CORNING 795 SILICONE

FOR MIAMI-DADE CO. B.C.C.O.

PRODUCT REVISED
as complying with the Florida
Building Code
Acceptance No 14-0527.02
Expiration Date June 3, 2019
By Manuel Diaz
Miami-Dade Product Control

enclos corp

2770 Blue Water Road
Eagan, MN 55121-1400
Tel. 651-796-6100 • Fax 651-994-6380
Engineering Locations
Eagan, MN • Montreal, QC, CA • Moncton, NB, CA
St. Louis, MO • Manila, PH

REVISIONS

WILLIAM D. COOK
LICENSE
43904
STATE OF FLORIDA
PROFESSIONAL ENGINEER
SEAL:
AUG 13 2014
Reviewed For Structural Integrity Only

BROMLEY • COOK ENGINEERING, INC.
STRUCTURAL ENGINEERING SERVICES
5440 N.W. 33RD AVENUE SUITE 100
FORT LAUDERDALE, FLORIDA 33309
TEL: (954) 772-4624 FAX: (954) 772-4634
CERT. OF AUTH. #00009124
WILLIAM D. COOK P.E.
FLA P.E. # 43904
FLA SI. # 2008

Date	Scale
8/13/14	

Drawing No.
7030TSLMI

Drawing Title
7030 SERIES CURTAIN WALL
TWIN SPAN
LARGE MISSILE IMPACT

Sheet No.
10/31

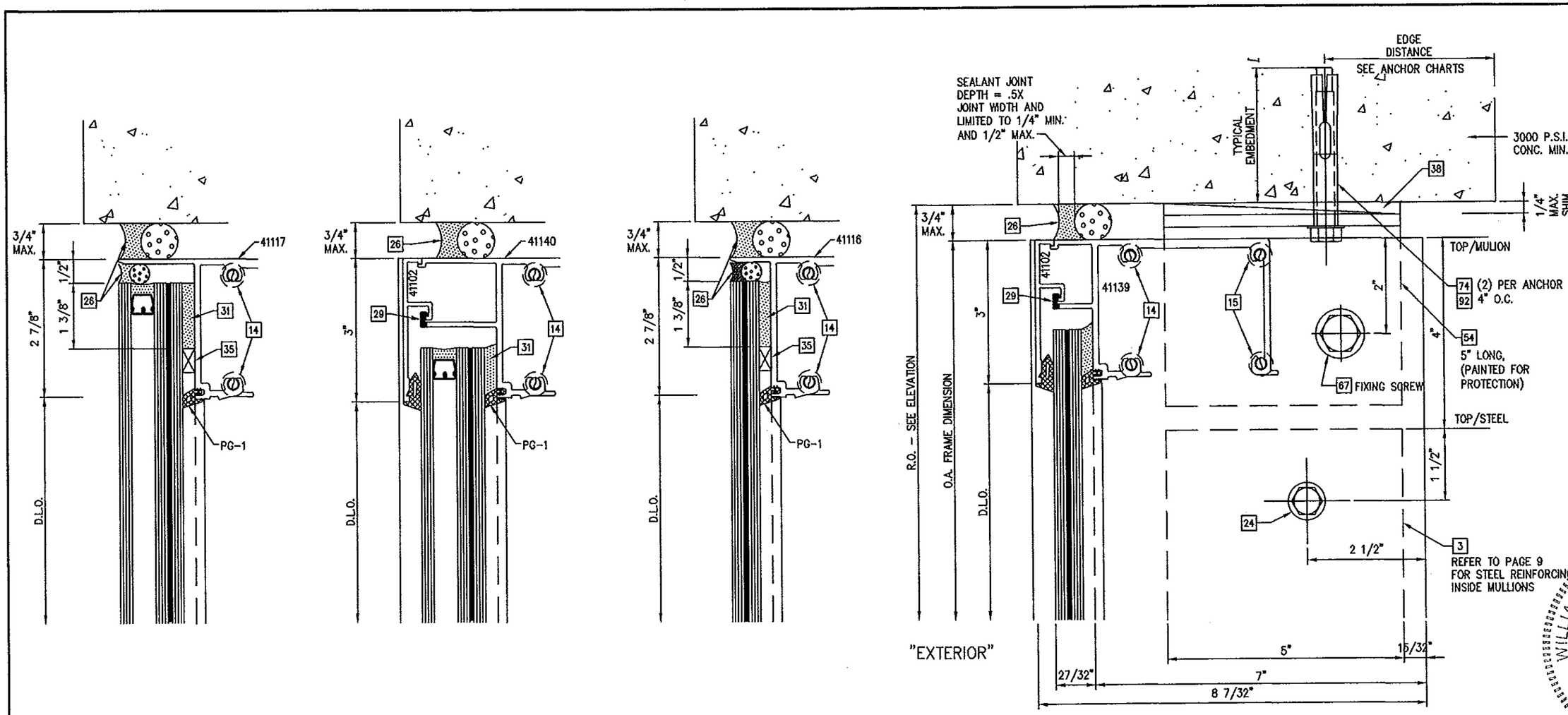

1/11 HEAD DETAIL
1 3/8" STRUCTURALLY GLAZED GLASS OPTION @ TYPICAL MULLION

1/11 HEAD DETAIL
1 3/8" CAPTURED GLASS OPTION @ TYPICAL MULLION

1/11 HEAD DETAIL
9/16" STRUCTURALLY GLAZED GLASS OPTION @ TYPICAL MULLION

1/11 HEAD DETAIL
9/16" CAPTURED GLASS @ TYPICAL MULLION

REFER TO PAGE 26 FOR ALLOWABLE ANCHOR TYPES & SUBSTRATES

FOR MIAMI-DADE CO. B.C.C.O.

PRODUCT REVISED
as complying with the Florida Building Code
Acceptance No 14-0527.02
Expiration Date June 3, 2019
By Manuel Perez
Miami Dade Product Control

enclos corp

2770 Blue Water Road
Eagan, MN 55121-1400
Tel. 651-796-6100 • Fax 651-994-6360
Engineering Locations
Eagan, MN • Montreal, QC, CA • Moncton, NB, CA
St. Louis, MO • Manila, PH

REVISIONS

WILLIAM D. COOK LICENSE No. 43904 STATE OF FLORIDA PROFESSIONAL ENGINEER
SEAL:
AUG 13 2014
Reviewed For Structural Integrity Only

BROMLEY - COOK ENGINEERING, INC.
STRUCTURAL ENGINEERING SERVICES
5440 N.W. 33RD AVENUE SUITE 100
FORT LAUDERDALE, FLORIDA 33309
TEL: (954) 772-4624 FAX: (954) 772-4634
CERT. OF AUTH. #00009124
WILLIAM D. COOK P.E.
FLA P.E. # 43904
FLA S.I. # 2008

Date	Scale
8/13/14	

Drawing No.
7030TSLMI

Drawing Title
7030 SERIES CURTAIN WALL
TWIN SPAN
LARGE MISSILE IMPACT

Sheet No.
11/31

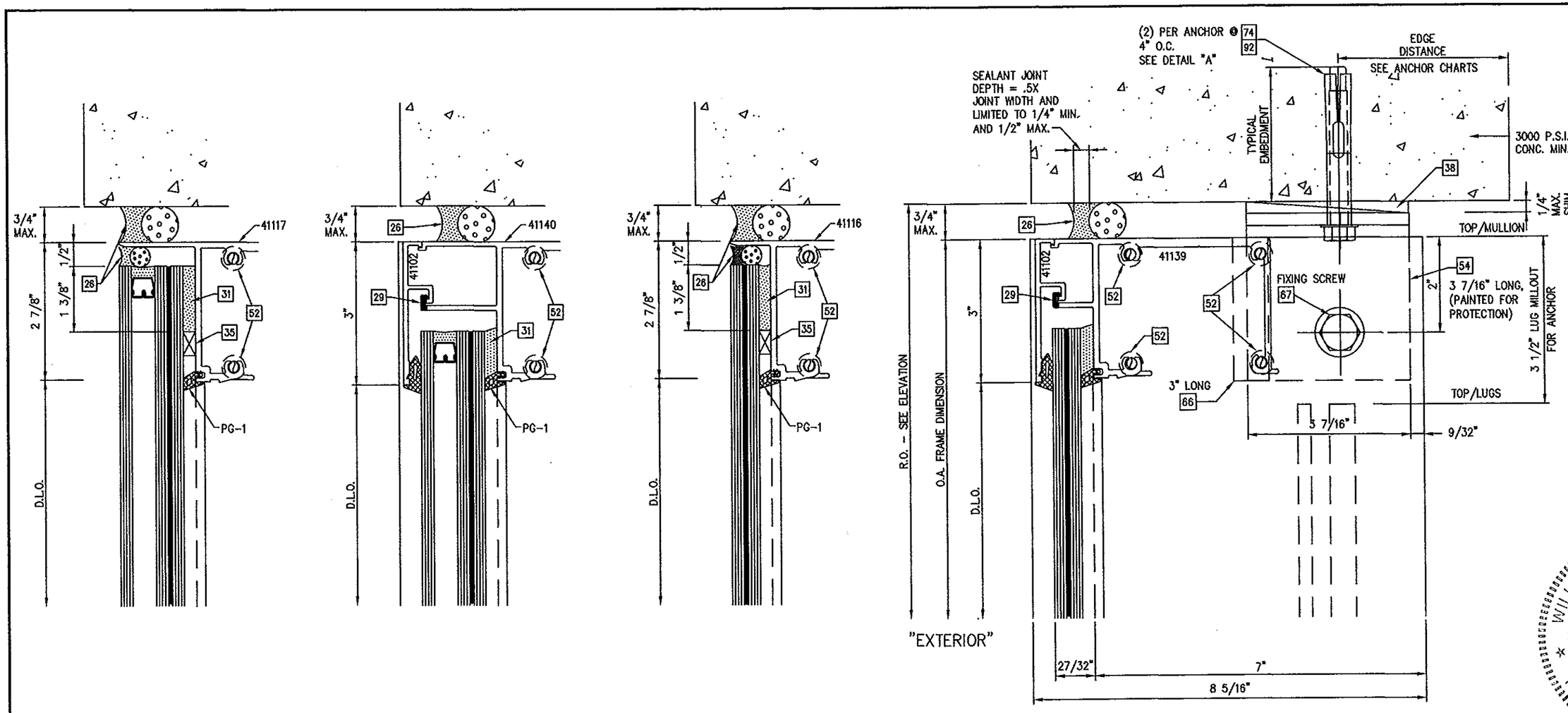

1/12 HEAD DETAIL
1 3/8" STRUCTURALLY GLAZED GLASS OPTION @ CORNER MULLION

1/12 HEAD DETAIL
1 3/8" CAPTURED GLASS OPTION @ CORNER MULLION

1/12 HEAD DETAIL
9/16" STRUCTURALLY GLAZED GLASS OPTION @ CORNER MULLION

1/12 HEAD DETAIL
9/16" CAPTURED GLASS @ CORNER MULLION

REFER TO PAGE 26 FOR ALLOWABLE ANCHOR TYPES & SUBSTRATES

FOR MIAMI-DADE CO. B.C.C.O.

PRODUCT REVISED
as complying with the Florida Building Code
Acceptance No 14-0527.02
Expiration Date June 3, 2019
By Manuel Perez
Miami-Dade Product Control

enclos corp

2770 Blue Water Road
Eagan, MN 55121-1400
Tel. 651-796-6100 • Fax 651-994-6360
Engineering Locations
Eagan, MN • Montreal, QC, CA • Moncton, NB, CA
St. Louis, MO • Manila, PH

REVISIONS

WILLIAM D. COOK LICENSE No 43904 STATE OF FLORIDA PROFESSIONAL ENGINEER
SEAL:
AUG 13 2014
Reviewed For Structural Integrity Only

BROMLEY - COOK ENGINEERING, INC.
STRUCTURAL ENGINEERING SERVICES
5440 N.W. 33RD AVENUE SUITE 100
FORT LAUDERDALE, FLORIDA 33309
TEL: (954) 772-4624 FAX: (954) 772-3634
CERT. OF AUTH. #00009124
WILLIAM D. COOK P.E.
FLA P.E. # 43904
FLA S.I. # 2008

Date	Scale
8/13/14	

Drawing No.
7030TSLMI

Drawing Title
7030 SERIES CURTAIN WALL
TWIN SPAN
LARGE MISSILE IMPACT

Sheet No.
12/31

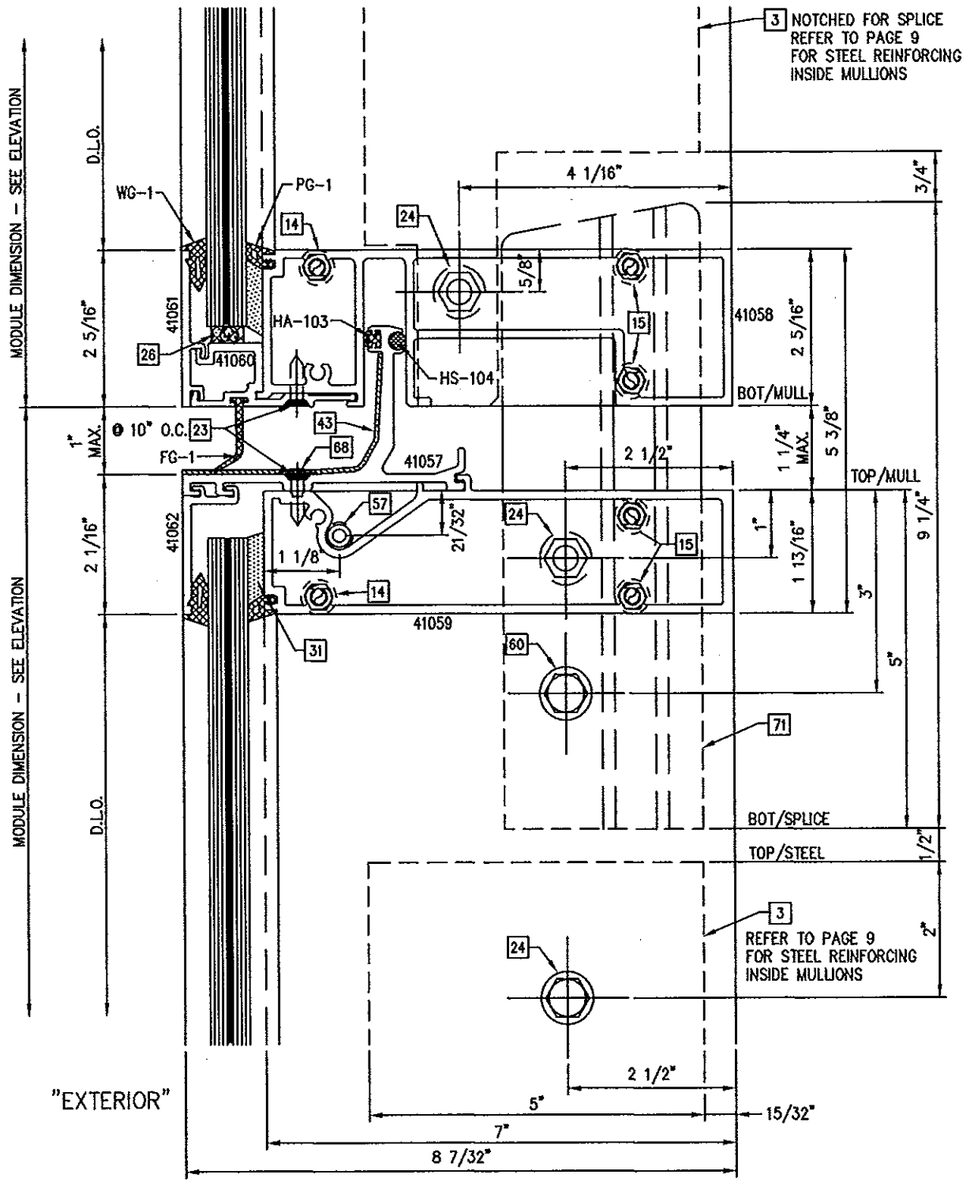

1/13 STACK RAIL DETAIL
9/16" CAPTURED GLASS
10" TYPICAL MULLION

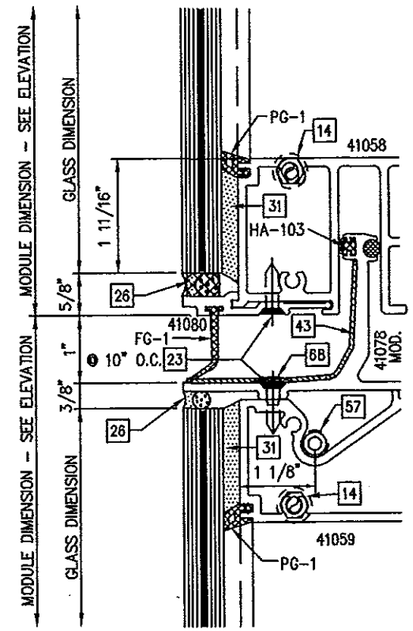

1/14 STACK RAIL DETAIL
9/16" STRUCTURALLY GLAZED OPTION

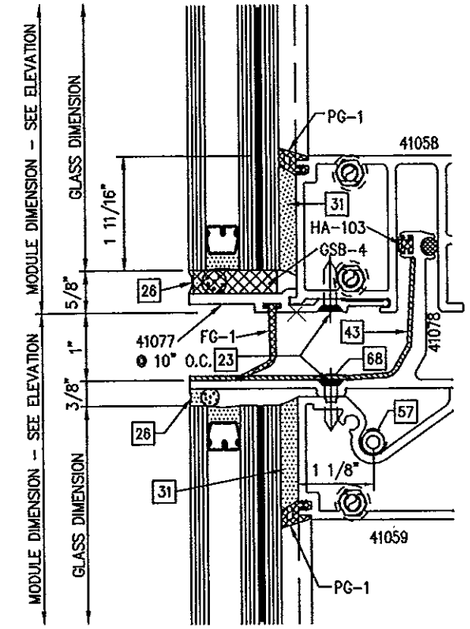

1/14 STACK RAIL DETAIL
1 3/8" STRUCTURALLY GLAZED OPTION

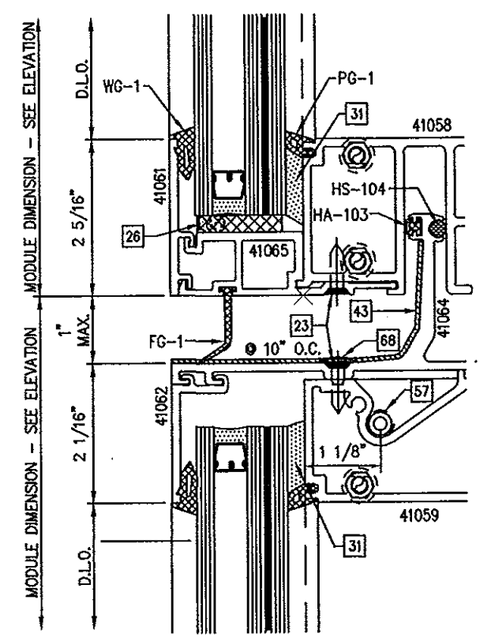

1/14 STACK RAIL DETAIL
1 3/8" CAPTURED GLASS OPTION

FOR MIAMI-DADE CO. B.C.C.O.

PRODUCT REVISED
as complying with the Florida Building Code
Acceptance No 14-0527.02
Expiration Date June 3, 2019
By Manuel Diaz
Miami Dade Product Control

enclos corp

2770 Blue Water Road
Eagan, MN 55121-1400
Tel. 651-796-6100 • Fax 651-994-6360
Engineering Locations
Eagan, MN • Montreal, QC, CA • Moncton, NB, CA
St. Louis, MO • Manila, PH

REVISIONS

WILLIAM D. COOK
LICENSE No. 43904
STATE OF FLORIDA
PROFESSIONAL ENGINEER
SEAL
AUG 13 2014
Reviewed For Structural Integrity Only

BROMLEY · COOK ENGINEERING INC.
STRUCTURAL ENGINEERING SERVICES
5440 N.W. 33RD AVENUE SUITE 100
FORT LAUDERDALE, FLORIDA 33309
TEL: (954) 772-4624 FAX: (954) 772-4635
CERT. OF AUTH. #00009124
WILLIAM D. COOK P.E.
FLA P.E. # 43904
FLA S.I. # 2008

Date	Scale
8/13/14	

Drawing No.
7030TSLMI

Drawing Title
7030 SERIES CURTAIN WALL
TWIN SPAN
LARGE MISSILE IMPACT

Sheet No.
13/31

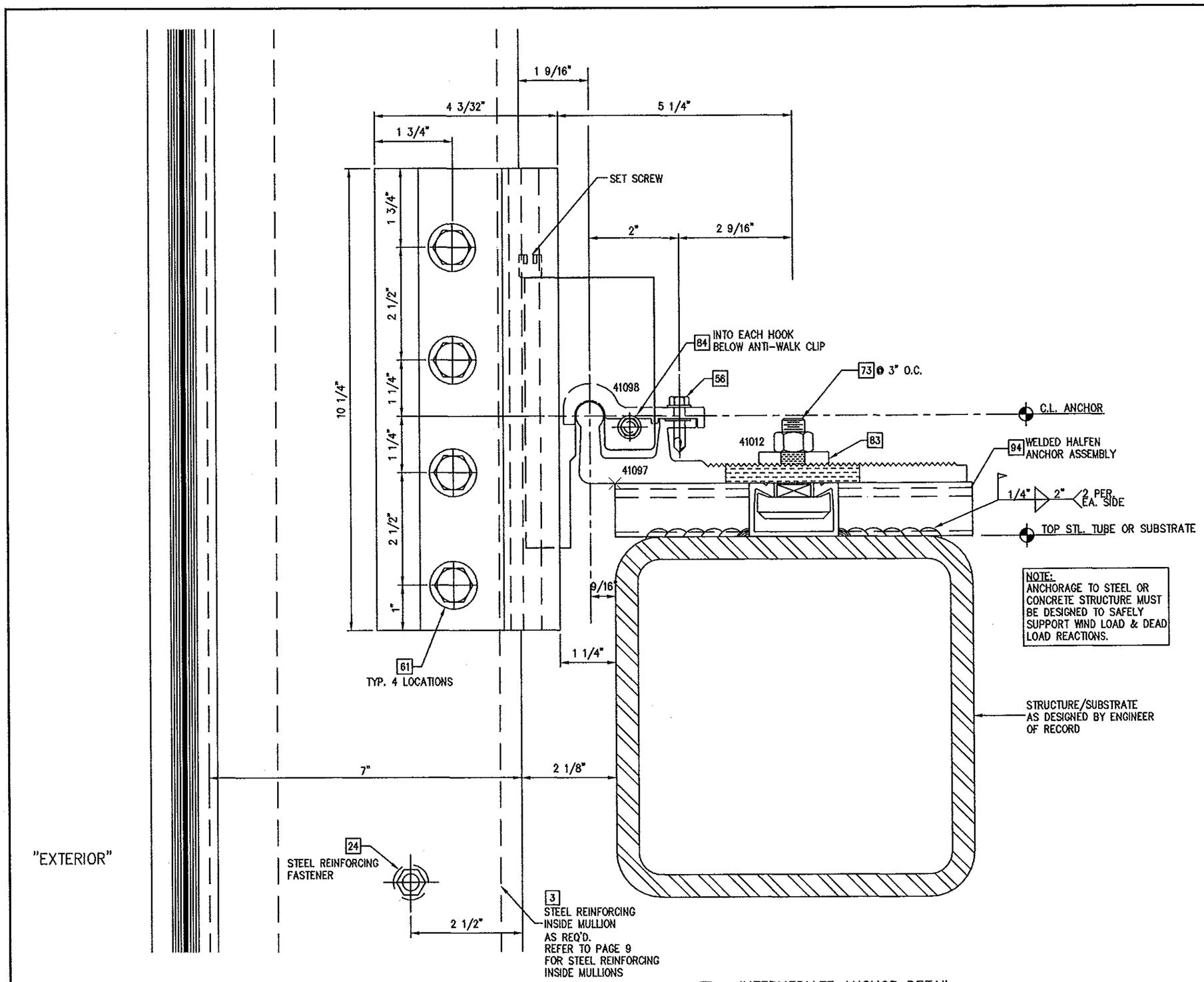

NOTE:
ANCHORAGE TO STEEL OR CONCRETE STRUCTURE MUST BE DESIGNED TO SAFELY SUPPORT WIND LOAD & DEAD LOAD REACTIONS.

1/15 INTERMEDIATE ANCHOR DETAIL
9/16" CAPTURED GLASS SHOWN
1 3/8" GLASS SIMILAR

FOR MIAMI-DADE CO. B.C.C.O.

PRODUCT REVISED
as complying with the Florida Building Code
Acceptance No 14-0527.02
Expiration Date June 3, 2019
By
Miami Dade Product Control

enclos corp
2770 Blue Water Road
Eagan, MN 55121-1400
Tel. 651-796-6100 • Fax 651-994-6360
Engineering Locations
Eagan, MN • Montreal, QC, CA • Moncton, NB, CA
St. Louis, MO • Manila, PH

REVISIONS

WILLIAM D. COOK
LICENSE
No 43904
AUG 13 2014
STATE OF FLORIDA
PROFESSIONAL ENGINEER
Reviewed For Structural Integrity Only

BROMLEY • COOK ENGINEERING, INC.
STRUCTURAL ENGINEERING SERVICES
5440 N.W. 33RD AVENUE SUITE 100
FORT LAUDERDALE, FLORIDA 33309
TEL: (954) 772-4624 FAX: (954) 772-2654
CERT. OF AUTH. #00009124
WILLIAM D. COOK P.E.
FLA. P.E. # 43904
FLA. S.L. # 2008

Date	Scale
8/13/14	

Drawing No.
7030TSLMI

Drawing Title
7030 SERIES CURTAIN WALL
TWIN SPAN
LARGE MISSILE IMPACT

Sheet No.
15/31

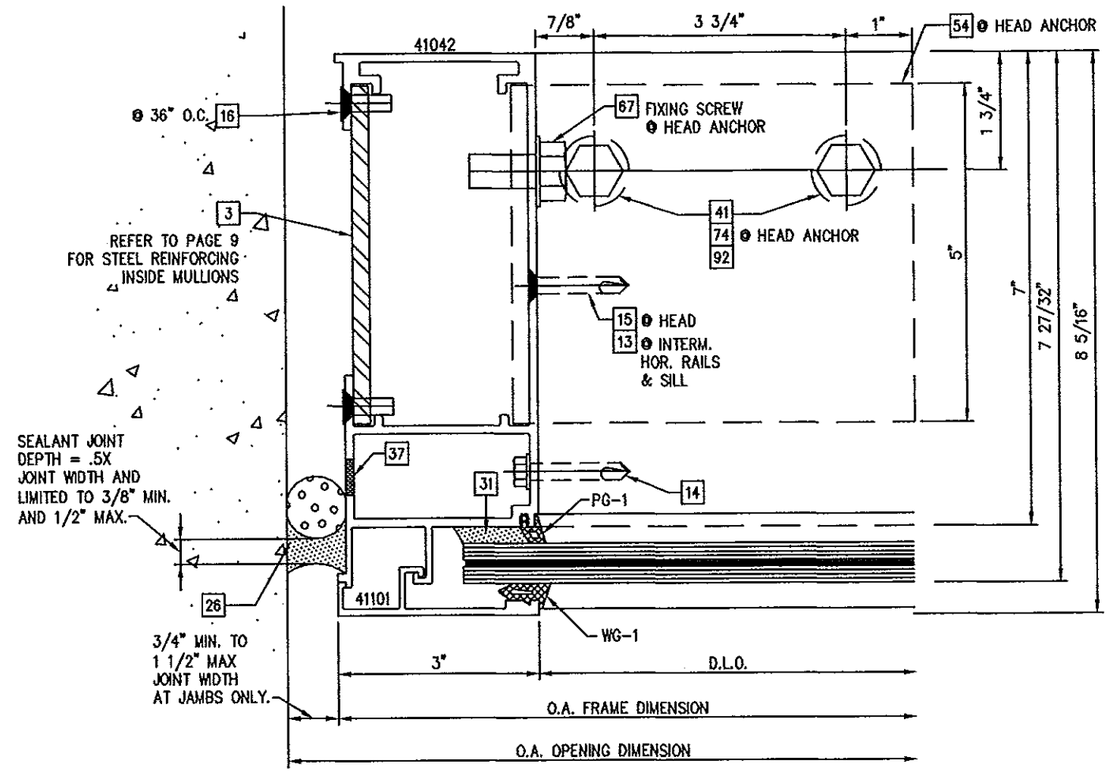

1/16 JAMB DETAIL
9/16" CAPTURED GLASS (@ HEAD RAIL)

REFER TO PAGE 26 FOR ALLOWABLE ANCHOR TYPES & SUBSTRATES

PERIMETER SEALANT OPTIONS:
DOW-CORNING 790 SILICONE
DOW-CORNING 791 SILICONE
DOW-CORNING 795 SILICONE

ALTERNATE PERIMETER SEALANT TYPES AND JOINT SIZES SHALL BE DESIGNED AND APPROVED BY DESIGN PROFESSIONAL OF RECORD AND OR THE SEALANT MANUFACTURER

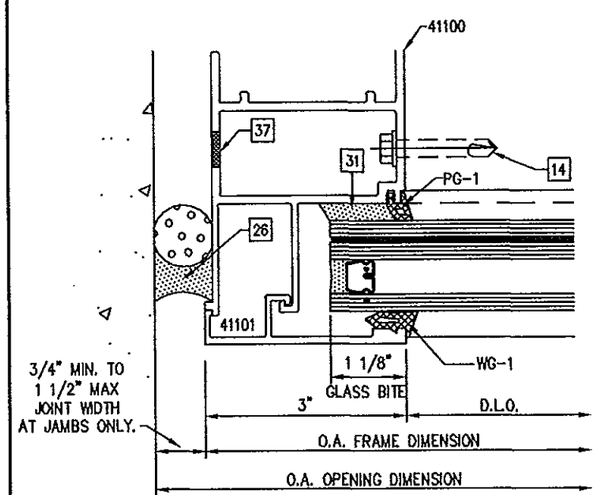

1/16 JAMB DETAIL
1 3/8" CAPTURED GLASS OPTION (@ HEAD RAIL)

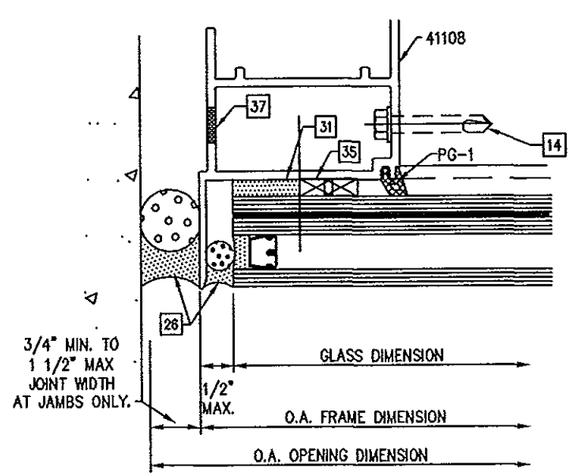

1/16 JAMB DETAIL
1 3/8" STRUCTURALLY GLAZED GLASS OPTION (@ HEAD RAIL)

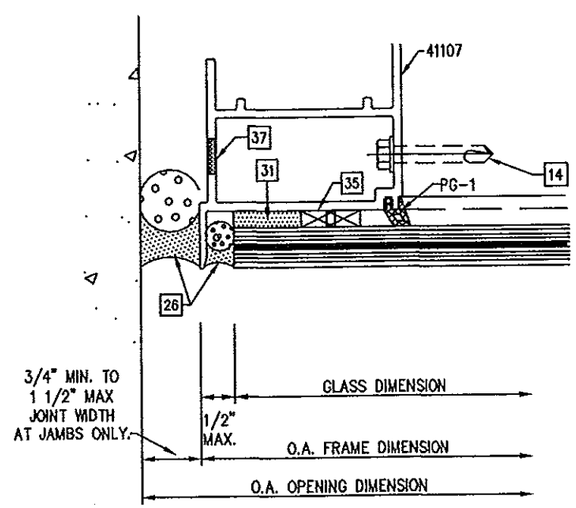

1/16 JAMB DETAIL
9/16" STRUCTURALLY GLAZED GLASS OPTION (@ HEAD RAIL)

FOR MIAMI-DADE CO. B.C.C.O.

PRODUCT REVISED
as complying with the Florida Building Code
Acceptance No 14-0527.02
Expiration Date June 3 2019
By Manuel Perez
Miami Dade Product Control

enclos corp
2770 Blue Water Road
Eagan, MN 55121-1400
Tel. 651-796-6100 • Fax 651-994-6360
Engineering Locations
Eagan, MN • Montreal, QC, CA • Moncton, NB, CA
St. Louis, MO • Manila, PH

REVISIONS

WILLIAM D. COOK LICENSE No 43904 AUG 13 2014 STATE OF FLORIDA PROFESSIONAL ENGINEER
Reviewed For Structural Integrity Only

BROMLEY · COOK ENGINEERING, INC.
STRUCTURAL ENGINEERING SERVICES
5440 N.W. 33RD AVENUE SUITE 100
FORT LAUDERDALE, FLORIDA 33309
TEL: (954) 772-4624 FAX: (954) 772-4634
CERT. OF AUTH. #00009124
WILLIAM D. COOK P.E.
FLA P.E. # 43904
FLA S.I. # 2008

Date	Scale
8/13/14	

Drawing No.
7030TSLMI

Drawing Title
7030 SERIES CURTAIN WALL
TWIN SPAN
LARGE MISSILE IMPACT

Sheet No.
16/31

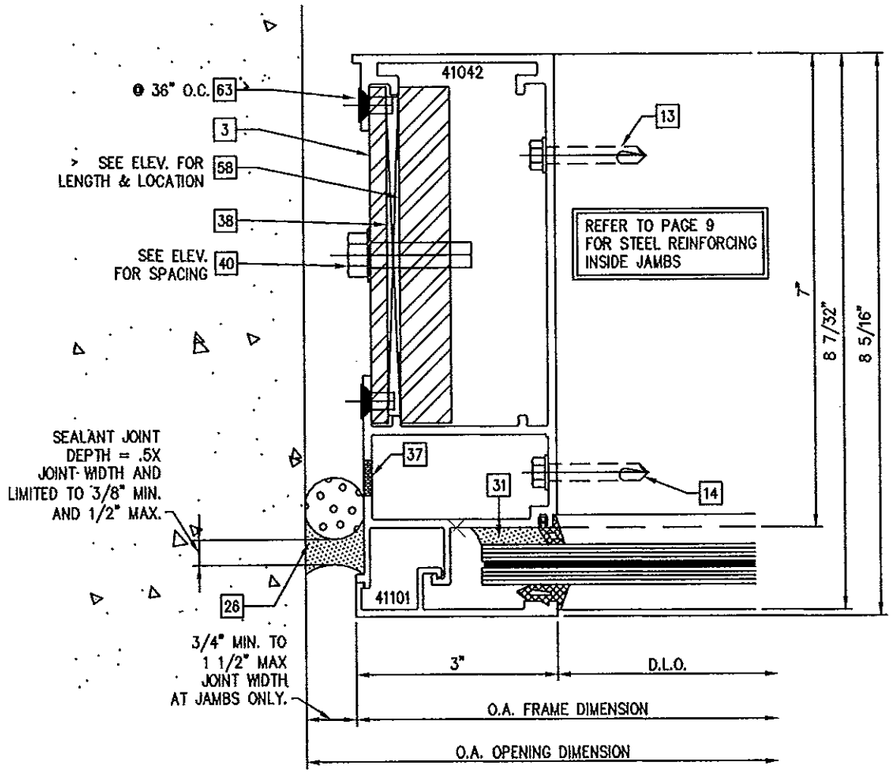

1/17 JAMB DETAIL
9/16" CAPTURED GLASS

REFER TO PAGE 26 FOR ALLOWABLE ANCHOR TYPES & SUBSTRATES

PERIMETER SEALANT OPTIONS:
DOW-CORNING 790 SILICONE
DOW-CORNING 791 SILICONE
DOW-CORNING 795 SILICONE

ALTERNATE PERIMETER SEALANT TYPES AND JOINT SIZES SHALL BE DESIGNED AND APPROVED BY DESIGN PROFESSIONAL OF RECORD AND OR THE SEALANT MANUFACTURER

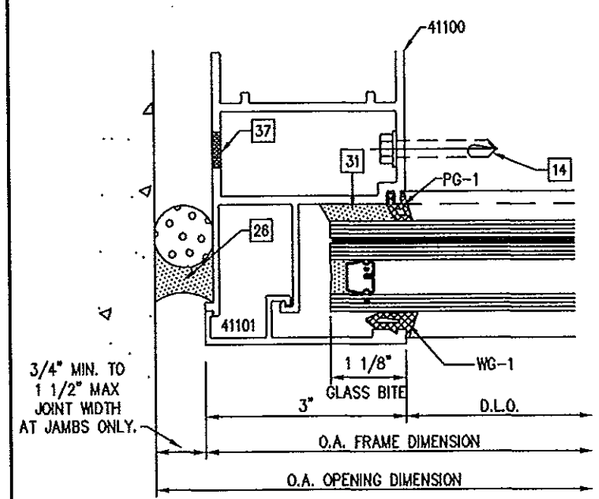

1/17 JAMB DETAIL
1 3/8" CAPTURED GLASS OPTION

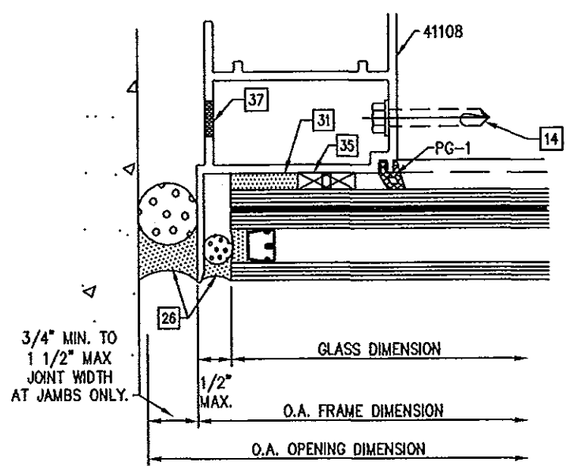

1/17 JAMB DETAIL
1 3/8" STRUCTURALLY GLAZED GLASS OPTION

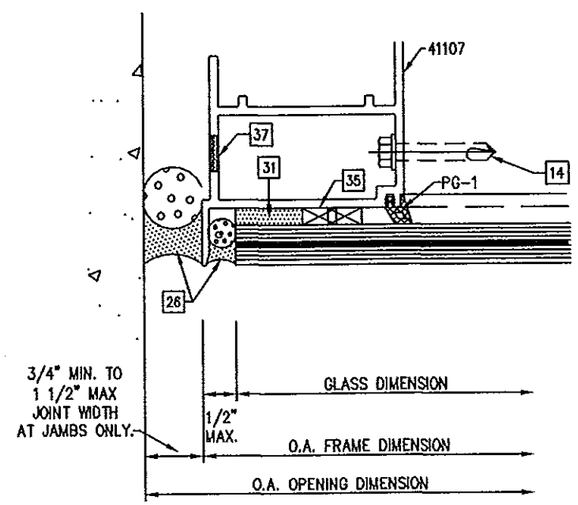

1/17 JAMB DETAIL
9/16" STRUCTURALLY GLAZED GLASS OPTION

FOR MIAMI-DADE CO. B.C.C.O.

PRODUCT REVISED
as complying with the Florida Building Code
Acceptance No 14-0527.02
Expiration Date June 3, 2019
By Manuel Perez
Miami Dade Product Control

enclos corp

2770 Blue Water Road
Eagan, MN 55121-1400
Tel. 651-796-6100 • Fax 651-994-6360
Engineering Locations
Eagan, MN • Montreal, QC, CA • Moncton, NB, CA
St. Louis, MO • Manila, PH

REVISIONS

SEAL
WILLIAM D. COOK
LICENSE
No 43904
AUG 13 2014
STATE OF FLORIDA
PROFESSIONAL ENGINEER
Reviewed For Structural Integrity Only

BROMLEY • COOK ENGINEERING, INC.
STRUCTURAL ENGINEERING SERVICES
5440 N.W. 33RD AVENUE SUITE 100
FORT LAUDERDALE, FLORIDA 33309
TEL: (954) 772-4624 FAX: (954) 772-4634
CERT. OF AUTH. #00009124
WILLIAM D. COOK P.E.
FLA P.E. # 43904
FLA S.I. # 2008

Date	Scale
8/13/14	

Drawing No.
7030TSLMI

Drawing Title
7030 SERIES CURTAIN WALL
TWIN SPAN
LARGE MISSILE IMPACT

Sheet No.
17/31

NOTE:
SEE SHEET 20 FOR STRUCTURALLY GLAZED GLASS DETAILS

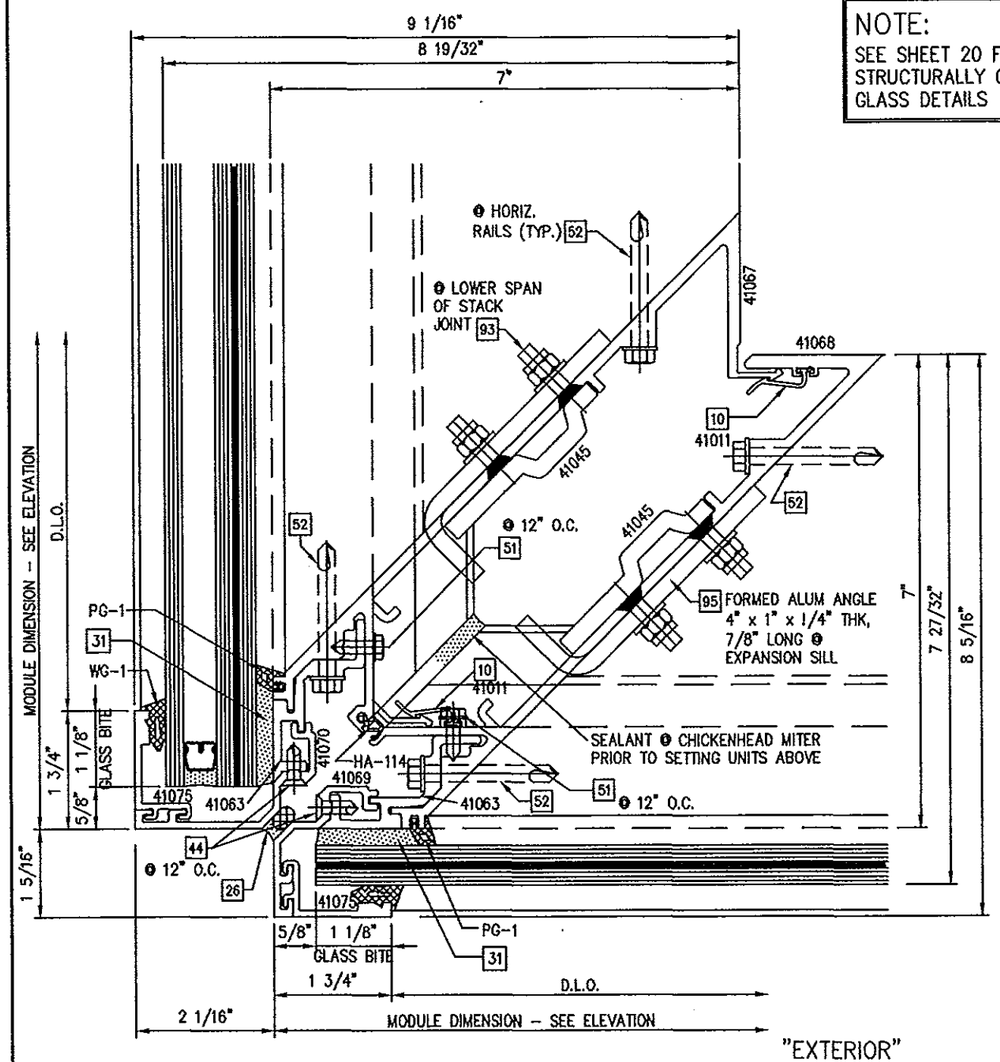

1/18 CORNER MULLION DETAIL @ STACK JOINT
9/16" & 1 3/8" CAPTURED GLASS OPTIONS

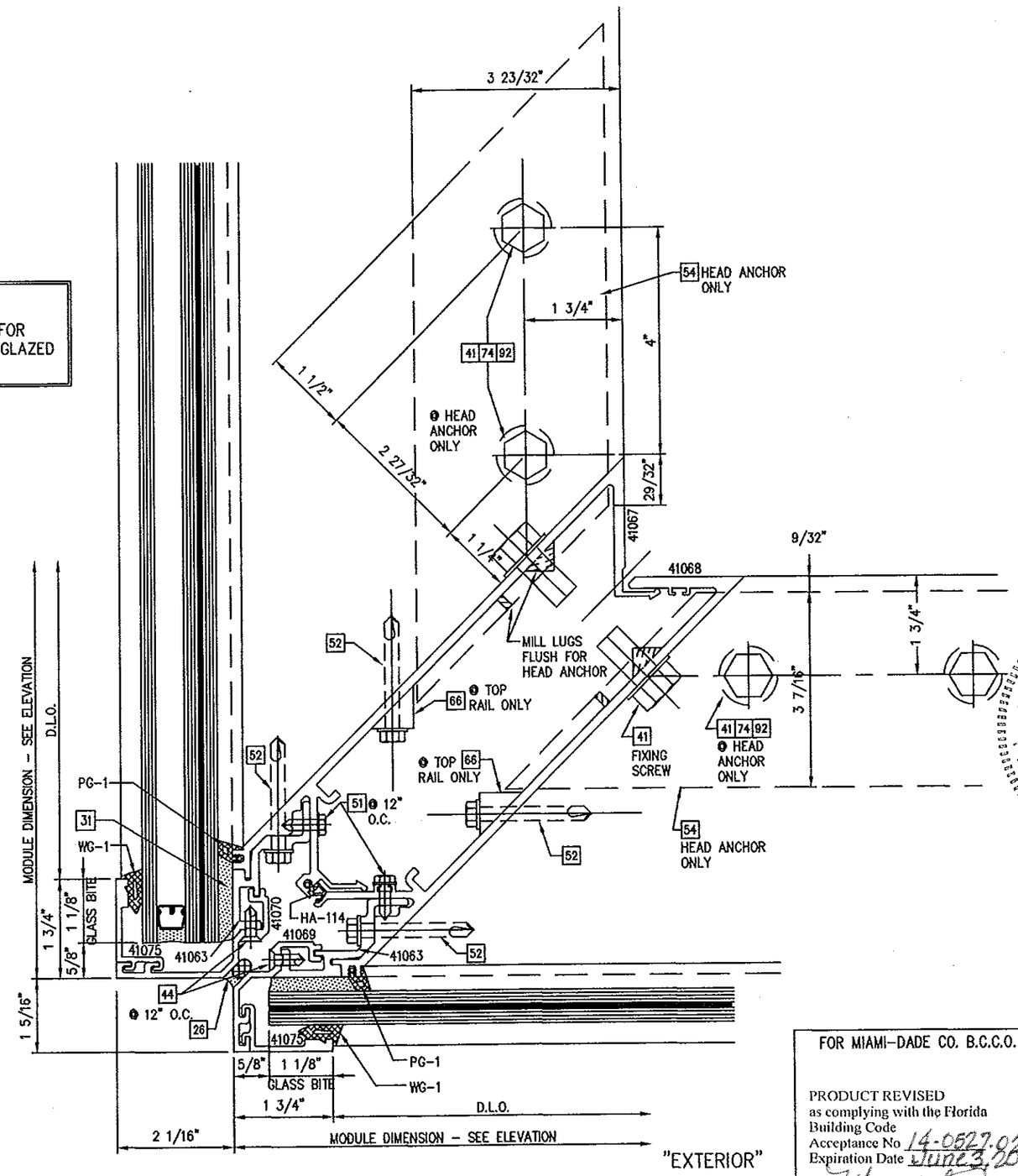

2/18 CORNER MULLION DETAIL @ HEAD RAIL
9/16" & 1 3/8" CAPTURED GLASS OPTIONS

FOR MIAMI-DADE CO. B.C.C.O.

PRODUCT REVISED
as complying with the Florida Building Code
Acceptance No 14-0527.02
Expiration Date June 3, 2019
By Manuel Diaz
Miami Dade Product Control

enclos corp

2770 Blue Water Road
Eagan, MN 55121-1400
Tel. 651-796-6100 • Fax 651-994-6380
Engineering Locations
Eagan, MN • Montreal, QC, CA • Moncton, NB, CA
St. Louis, MO • Manila, PH

REVISIONS

WILLIAM D. COOK LICENSE No. 43904 STATE OF FLORIDA PROFESSIONAL ENGINEER
SEAL: AUG 13 2014
Reviewed For Structural Integrity Only

BROMLEY · COOK ENGINEERING, INC.
STRUCTURAL ENGINEERING SERVICES
3440 N.W. 33RD AVENUE SUITE 100
FORT LAUDERDALE, FLORIDA 33309
TEL: (954) 772-4624 FAX: (954) 772-3634
CERT. OF AUTH. #00009124
WILLIAM D. COOK P.E.
FLA. P.E. # 43904
FLA SL. # 2008

Date	Scale
8/13/14	

Drawing No.
7030TSLMI

Drawing Title
7030 SERIES CURTAIN WALL
TWN SPAN
LARGE MISSILE IMPACT

Sheet No.
18/31

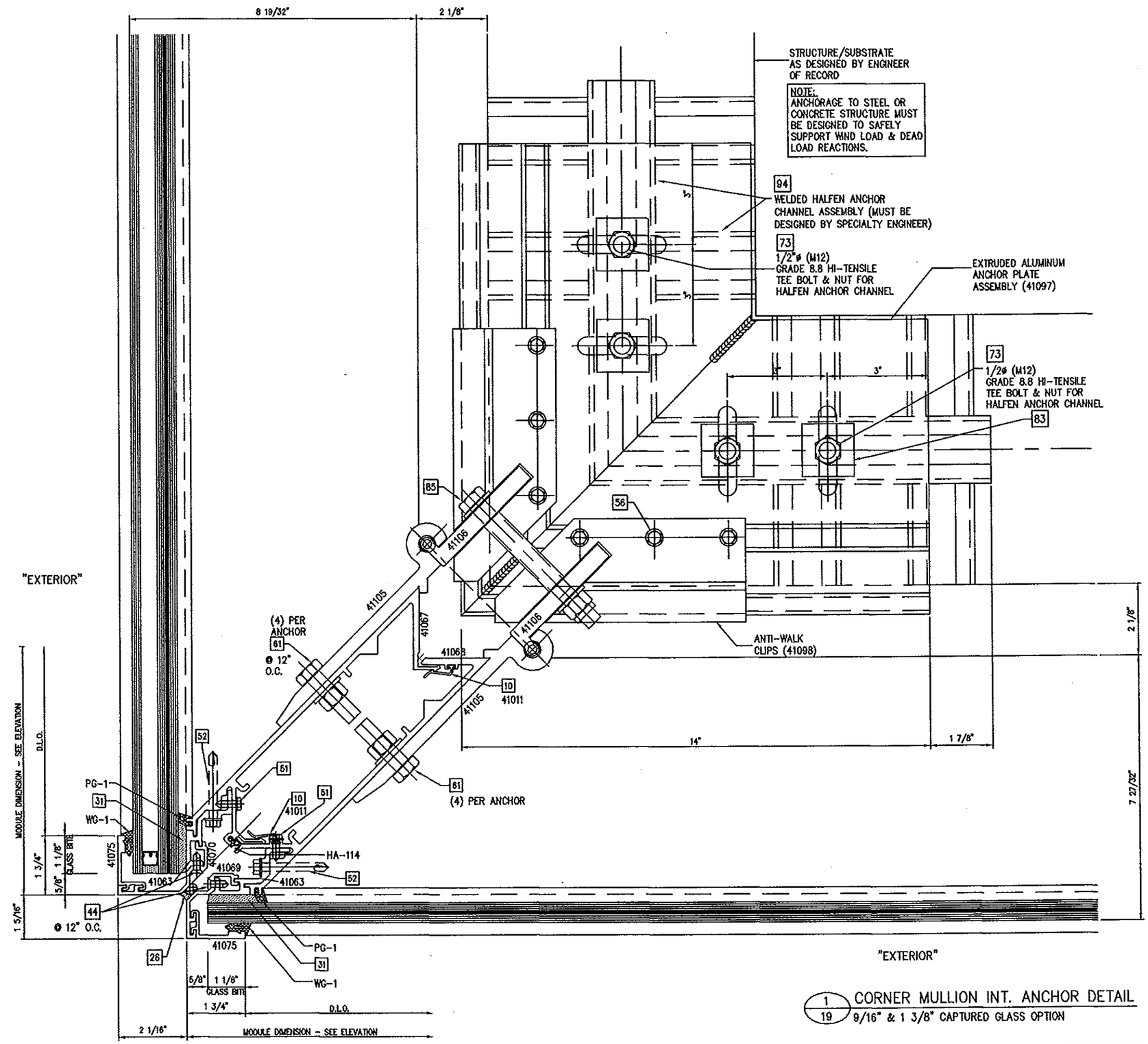

1/19 CORNER MULLION INT. ANCHOR DETAIL
9/16" & 1 3/8" CAPTURED GLASS OPTION

NOTE:
SEE SHEET 20 FOR STRUCTURALLY GLAZED GLASS DETAILS

FOR MIAMI-DADE CO. B.C.C.O.

PRODUCT REVISED
as complying with the Florida Building Code
Acceptance No 14-0527.02
Expiration Date June 3, 2019
By Manuel Perez
Miami-Dade Product Control

enclos corp

2770 Blue Water Road
Eagan, MN 55121-1400
Tel. 651-796-6100 • Fax 651-894-6300

Engineering Locations
Eagan, MN • Montreal, QC, CA • Moncton, NB, CA
St. Louis, MO • Manila, PH

REVISIONS

WILLIAM D. COOK
LICENSE
No. 43904
STATE OF FLORIDA
PROFESSIONAL ENGINEER
SEAL:
AUG 13 2014
Revised For Structural Integrity Only

BROMLEY • COOK ENGINEERING, INC.
STRUCTURAL ENGINEERING SERVICES
5440 N.W. 33RD AVENUE SUITE 100
FORT LAUDERDALE, FLORIDA 33309
TEL: (954) 772-4624 FAX: (954) 772-4634
CERT. OF AUTH. #00009124
WILLIAM D. COOK P.E.
FLA P.E. # 43904
FLA S.I. # 2008

Date	Scale
8/13/14	

Drawing No.
7030TSLMI

Drawing Title
7030 SERIES CURTAIN WALL
TWIN SPAN
LARGE MISSILE IMPACT

Sheet No.
19/31

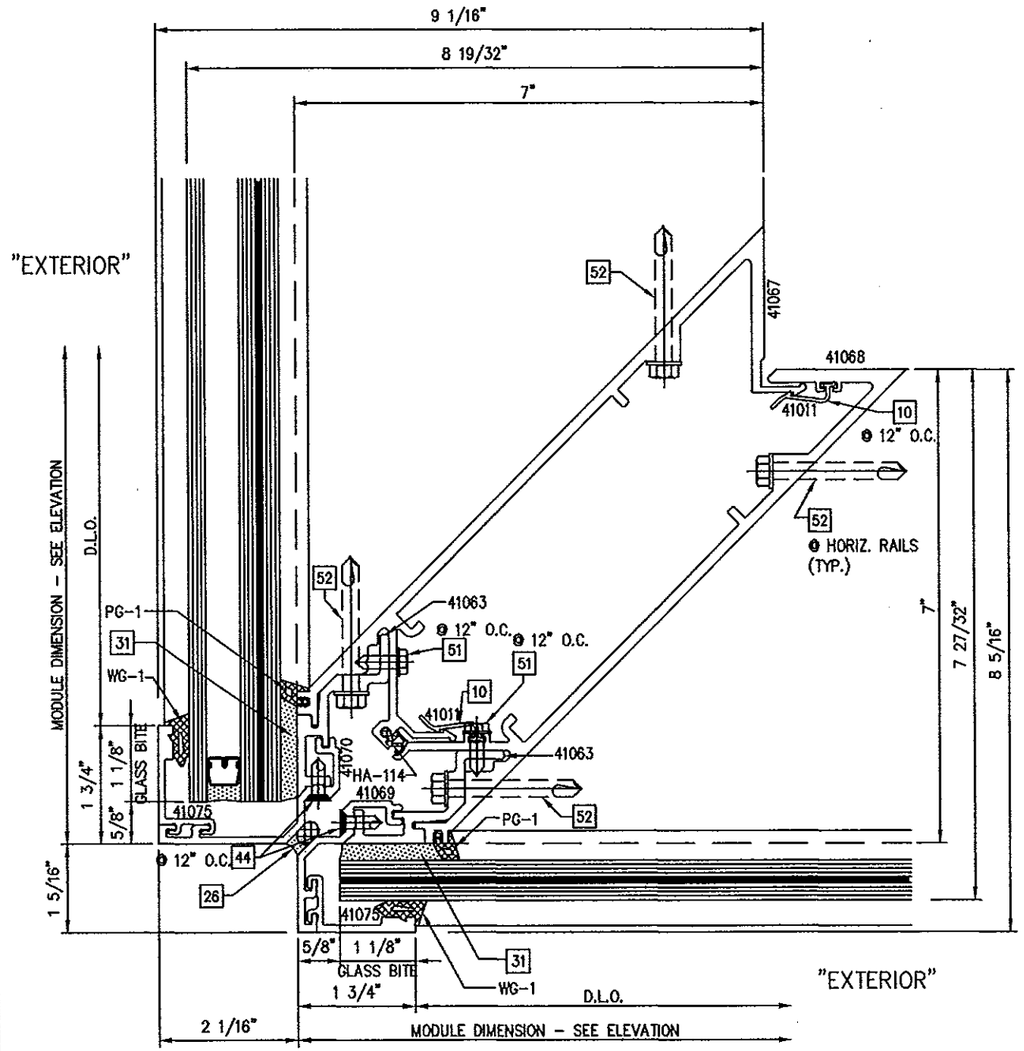

1/20 CORNER MULLION DETAIL @ SILL

9/16" & 1 3/8" CAPTURED GLASS OPTIONS

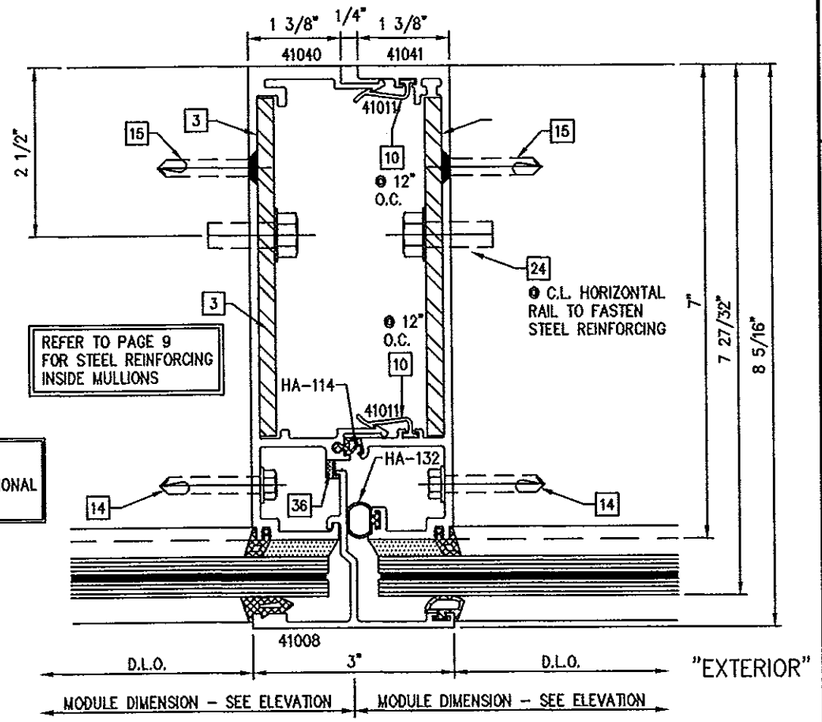

REFER TO PAGE 9 FOR STEEL REINFORCING INSIDE MULLIONS

NOTE:
SEE SHEET 21 FOR OPTIONAL GLAZING DETAILS

2/20 TYPICAL MULLION DETAIL

9/16" CAPTURED GLASS

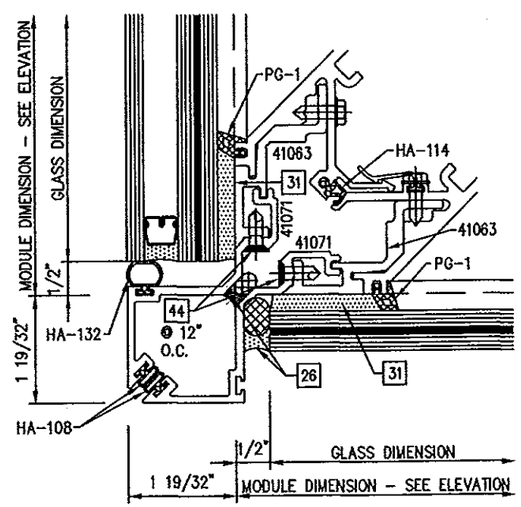

1/20 CORNER MULLION DETAIL

9/16" & 1 3/8" STRUCTURALLY GLAZED GLASS OPTIONS

FOR MIAMI-DADE CO. B.C.C.O.

PRODUCT REVISED
as complying with the Florida
Building Code
Acceptance No 14-0527.02
Expiration Date June 3, 2019
By Manuel Sosa
Miami-Dade Product Control

enclos corp

2770 Blue Water Road
Eagan, MN 55121-1400
Tel. 651-796-6100 • Fax 651-994-6380

Engineering Locations
Eagan, MN • Montreal, QC, CA • Moncton, NB, CA
St. Louis, MO • Manila, PH

REVISIONS

WILLIAM D. COOK
LICENSE
43904
STATE OF FLORIDA
PROFESSIONAL ENGINEER
SEAL:
AUG 13 2014
Reviewed For Structural Integrity Only

BROMLEY · COOK ENGINEERING, INC.
STRUCTURAL ENGINEERING SERVICES
5440 N.W. 33RD AVENUE SUITE 100
FORT LAUDERDALE, FLORIDA 33309
TEL: (954) 772-4624 FAX: (954) 772-8863
CERT. OF AUTH. #00009124
WILLIAM D. COOK P.E.
FLA P.E. # 43904
FLA S.I. # 2008

Date	Scale
8/13/14	

Drawing No.
7030TSLMI

Drawing Title
7030 SERIES CURTAIN WALL
TWIN SPAN
LARGE MISSILE IMPACT

Sheet No.
20/31

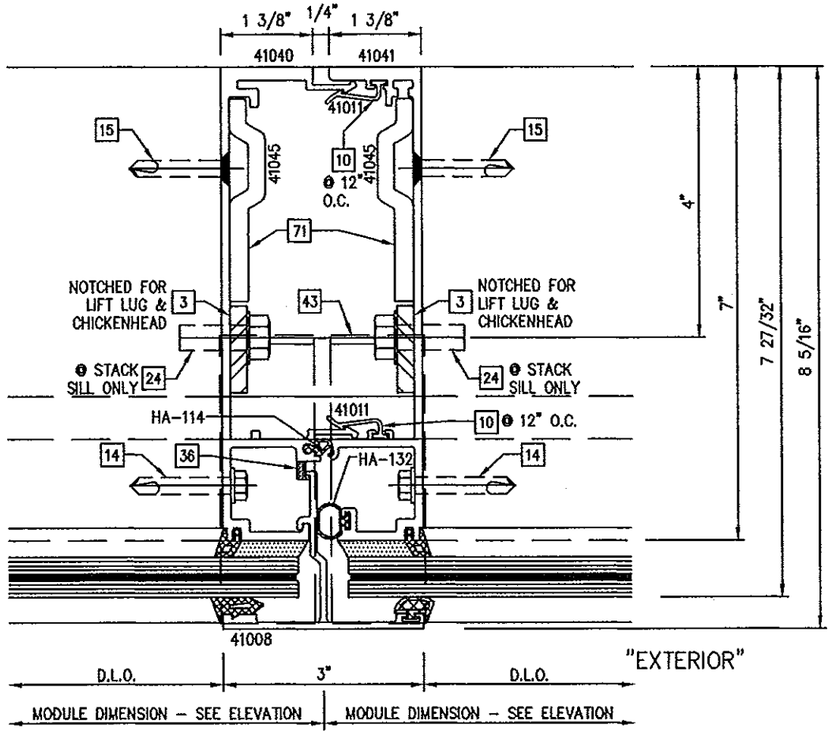

1/21 TYPICAL MULLION DETAIL AT CHICKENHEAD
9/16" CAPTURED GLASS

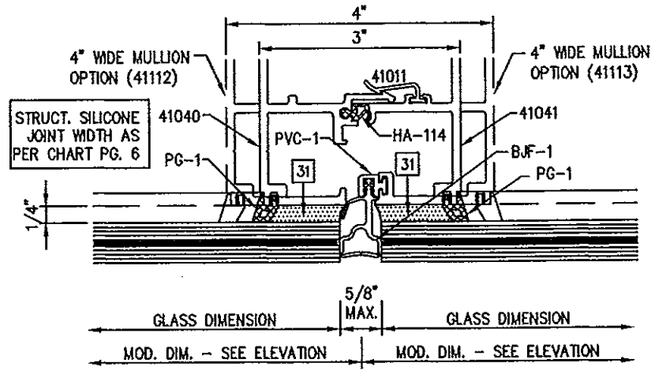

1/21 TYPICAL MULLION DETAIL
9/16" STRUCTURAL GLAZED GLASS OPTION WITH GASKETED BUTT JOINT

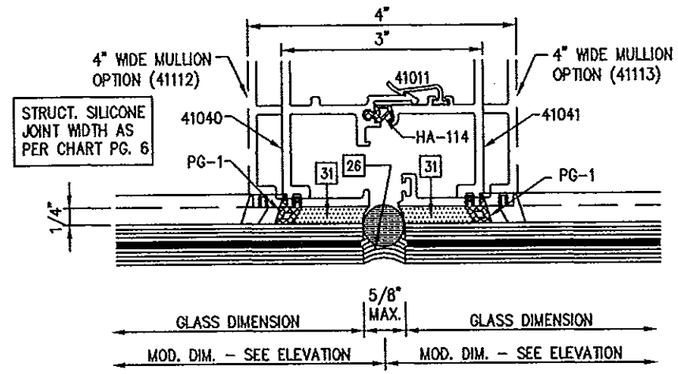

1/21 TYPICAL MULLION DETAIL
9/16" STRUCTURAL GLAZED GLASS OPTION WITH SILICONE BUTT JOINT

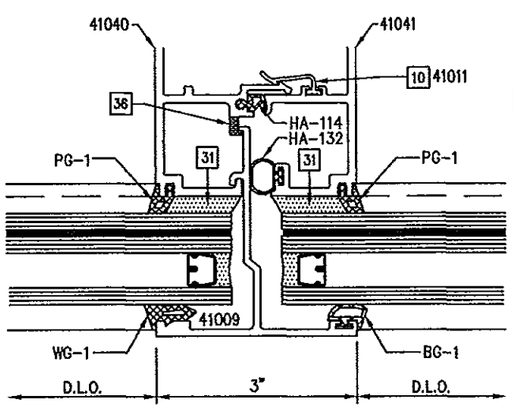

1/21 TYPICAL MULLION DETAIL
1 3/8" CAPTURED GLASS OPTION

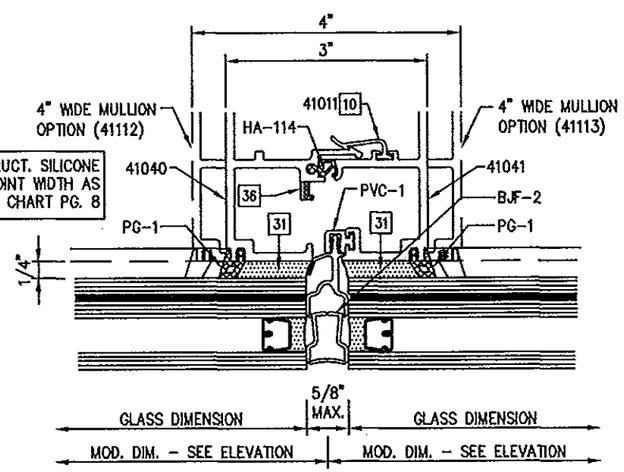

1/21 TYPICAL MULLION DETAIL
1 3/8" STRUCTURAL GLAZED GLASS OPTION WITH GASKETED BUTT JOINT

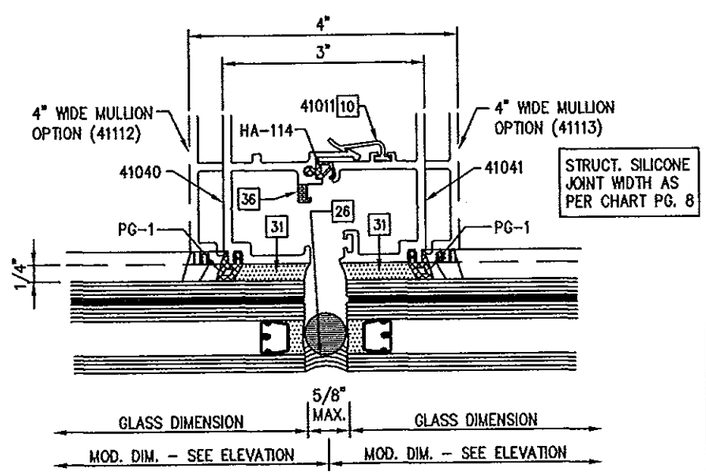

1/21 TYPICAL MULLION DETAIL
1 3/8" STRUCTURAL GLAZED GLASS OPTION WITH SILICONE BUTT JOINT

FOR MIAMI-DADE CO. B.C.C.O.

PRODUCT REVISED
as complying with the Florida
Building Code
Acceptance No 14-0527.02
Expiration Date June 3, 2019
By Manuel Sosa
Miami Dade Product Control

enclos corp
2770 Blue Water Road
Eagan, MN 55121-1400
Tel. 651-798-6100 • Fax 651-994-6380
Engineering Locations
Eagan, MN • Montreal, QC, CA • Moncton, NB, CA
St. Louis, MO • Manila, PH

REVISIONS

WILLIAM D. COOK
LICENSE
No 43904
STATE OF FLORIDA
PROFESSIONAL ENGINEER
AUG 13 2014
Reviewed For Structural Integrity Only

BROMLEY · COOK ENGINEERING, INC.
STRUCTURAL ENGINEERING SERVICES
5440 N.W. 33RD AVENUE SUITE 100
FORT LAUDERDALE, FLORIDA 33309
TEL: (954) 772-4624 FAX: (954) 772-4634
CERT. OF AUTH. #00009124
WILLIAM D. COOK P.E.
FLA P.E. # 43904
FLA S.I. # 2008

Date	Scale
8/13/14	

Drawing No.
7030TSLMI

Drawing Title
7030 SERIES CURTAIN WALL
TWIN SPAN
LARGE MISSILE IMPACT

Sheet No.
21/31

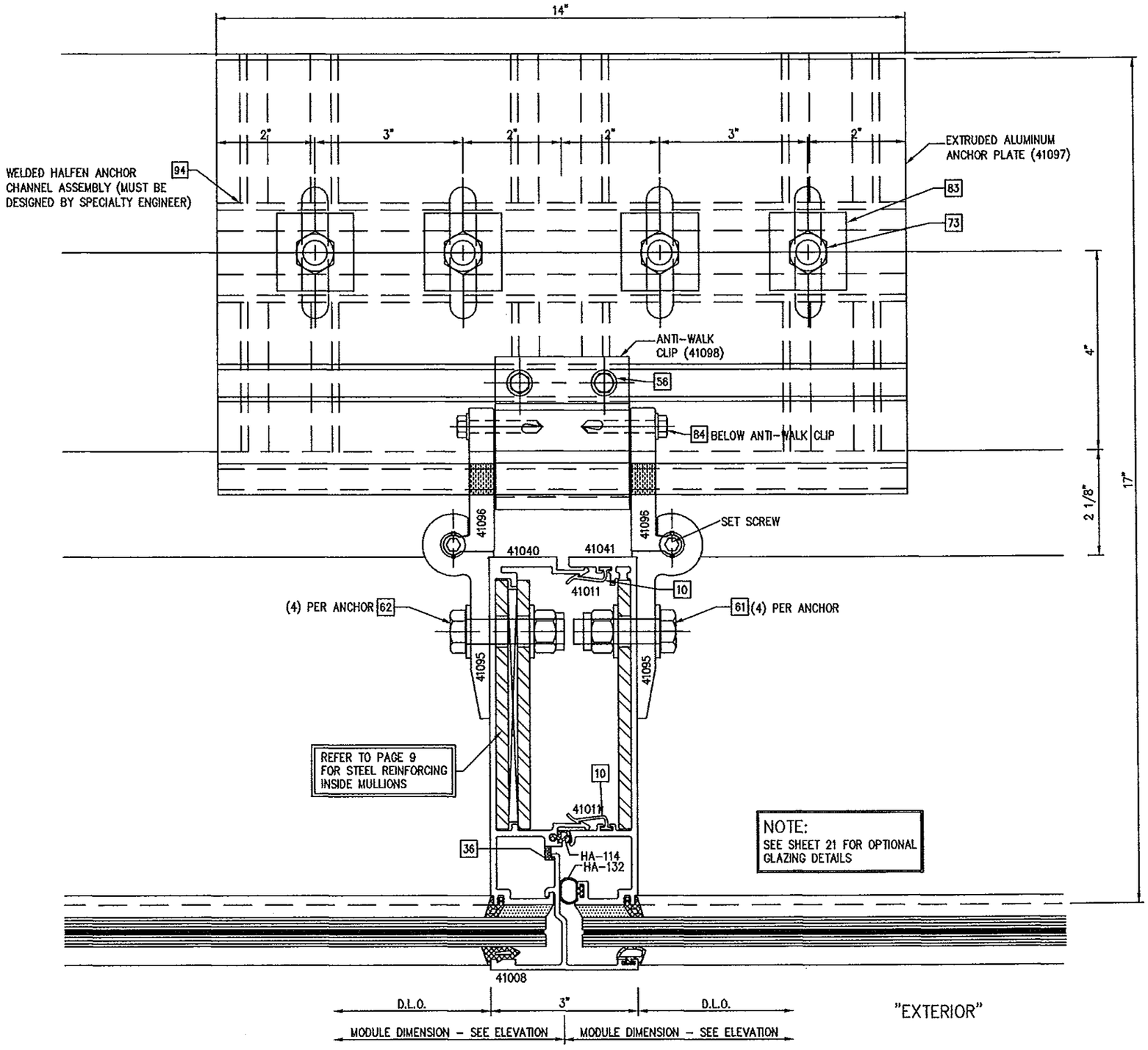

NOTE:
SEE SHEET 21 FOR OPTIONAL GLAZING DETAILS

1/22 TYPICAL MULLION DETAIL AT INT. ANCHOR
9/16" CAPTURED GLASS

FOR MIAMI-DADE CO. B.C.C.O.

PRODUCT REVISED
as complying with the Florida Building Code
Acceptance No 14-0527.02
Expiration Date June 3, 2019
By Manuel Diaz
Miami-Dade Product Control

enclos corp

2770 Blue Water Road
Eagan, MN 55121-1400
Tel. 651-796-6100 • Fax 651-994-6360
Engineering Locations
Eagan, MN • Montreal, QC, CA • Moncton, NB, CA
St. Louis, MO • Manila, PH

REVISIONS

WILLIAM D. COOK LICENSE No 43904 STATE OF FLORIDA PROFESSIONAL ENGINEER
SEAL:
AUG 13 2014
Reviewed For Structural Integrity Only

BROMLEY • COOK ENGINEERING, INC.
STRUCTURAL ENGINEERING SERVICES
5440 N.W. 33RD AVENUE SUITE 100
FORT LAUDERDALE, FLORIDA 33309
TEL: (954) 772-4624 FAX: (954) 772-4685
CERT. OF AUTH. #00009124
WILLIAM D. COOK P.E.
FLA P.E. # 43904
FLA SL. # 2008

Date	Scale
8/13/14	

Drawing No.
7030TSLMI

Drawing Title
7030 SERIES CURTAIN WALL
TWIN SPAN
LARGE MISSILE IMPACT

Sheet No.
22/31

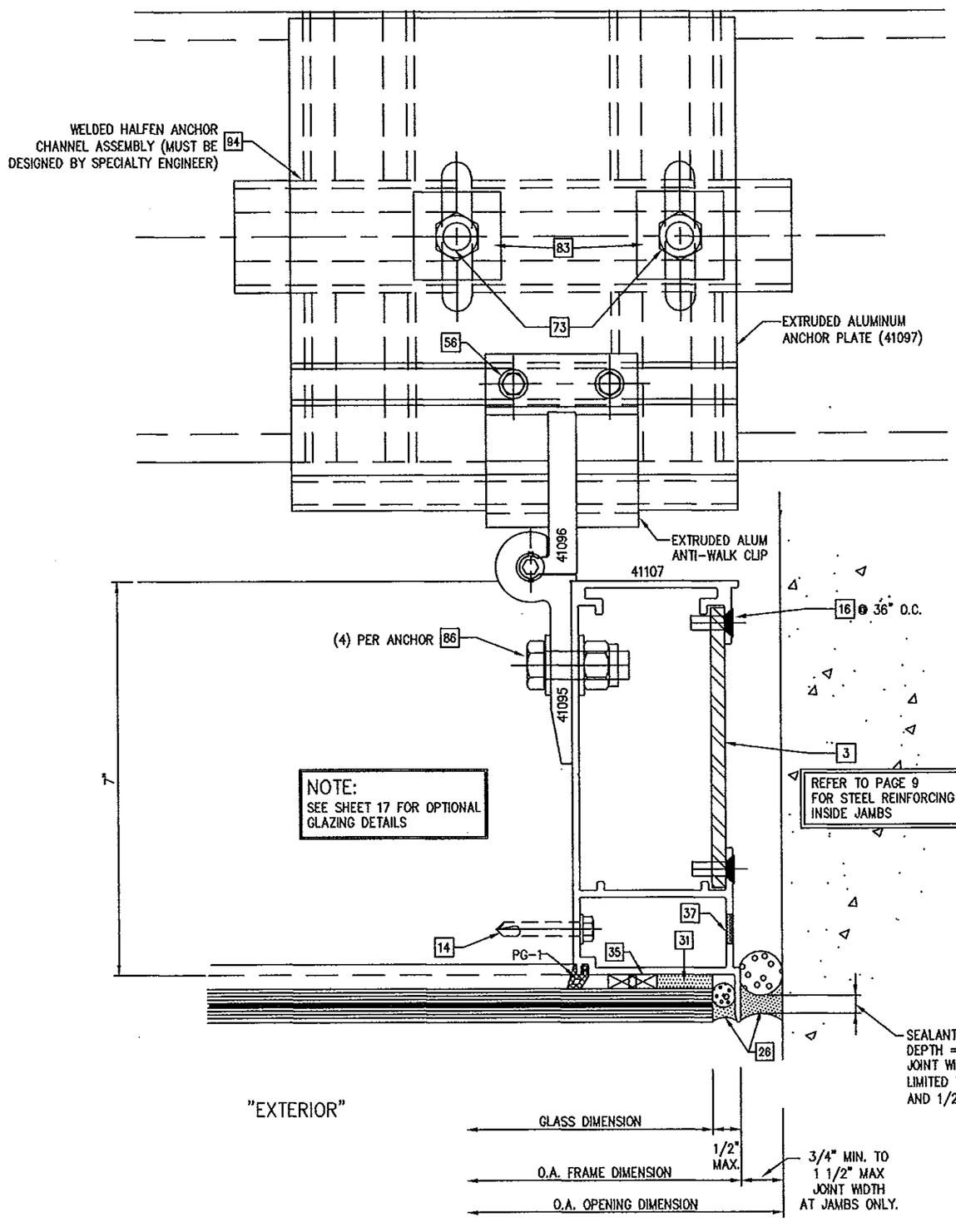

ALTERNATE PERIMETER SEALANT TYPES AND JOINT SIZES SHALL BE DESIGNED AND APPROVED BY DESIGN PROFESSIONAL OF RECORD AND OR THE SEALANT MANUFACTURER

PERIMETER SEALANT OPTIONS:
DOW-CORNING 790 SILICONE
DOW-CORNING 791 SILICONE
DOW-CORNING 795 SILICONE

1/23 TYPICAL JAMB DETAIL AT INT. ANCHOR
9/16" STRUCTURALLY GLAZED GLASS OPTION

FOR MIAMI-DADE CO. B.C.C.O.

PRODUCT REVISED
as complying with the Florida Building Code
Acceptance No 14-0527.02
Expiration Date June 3, 2019
By Manuel Perez
Miami-Dade Product Control

enclos corp
2770 Blue Water Road
Eagan, MN 55121-1400
Tel. 651-796-6100 • Fax 651-994-6560
Engineering Locations
Eagan, MN • Montreal, QC, CA • Moncton, NB, CA
St. Louis, MO • Manila, PH

REVISIONS

WILLIAM D. COOK LICENSE No 43904 STATE OF FLORIDA PROFESSIONAL ENGINEER
SEAL
AUG 13 2014
Reviewed For Structural Integrity Only

BROMLEY • COOK ENGINEERING, INC.
STRUCTURAL ENGINEERING SERVICES
5440 N.W. 33RD AVENUE SUITE 100
FORT LAUDERDALE, FLORIDA 33309
TEL: (954) 772-4824 FAX: (954) 772-4825
CERT. OF AUTH. #00009124
WILLIAM D. COOK P.E.
FLA P.E. # 43904
FLA S.I. # 2008

Date	Scale
8/13/14	

Drawing No.
7030TSLMI

Drawing Title
7030 SERIES CURTAIN WALL
TWIN SPAN
LARGE MISSILE IMPACT

Sheet No.
23/31

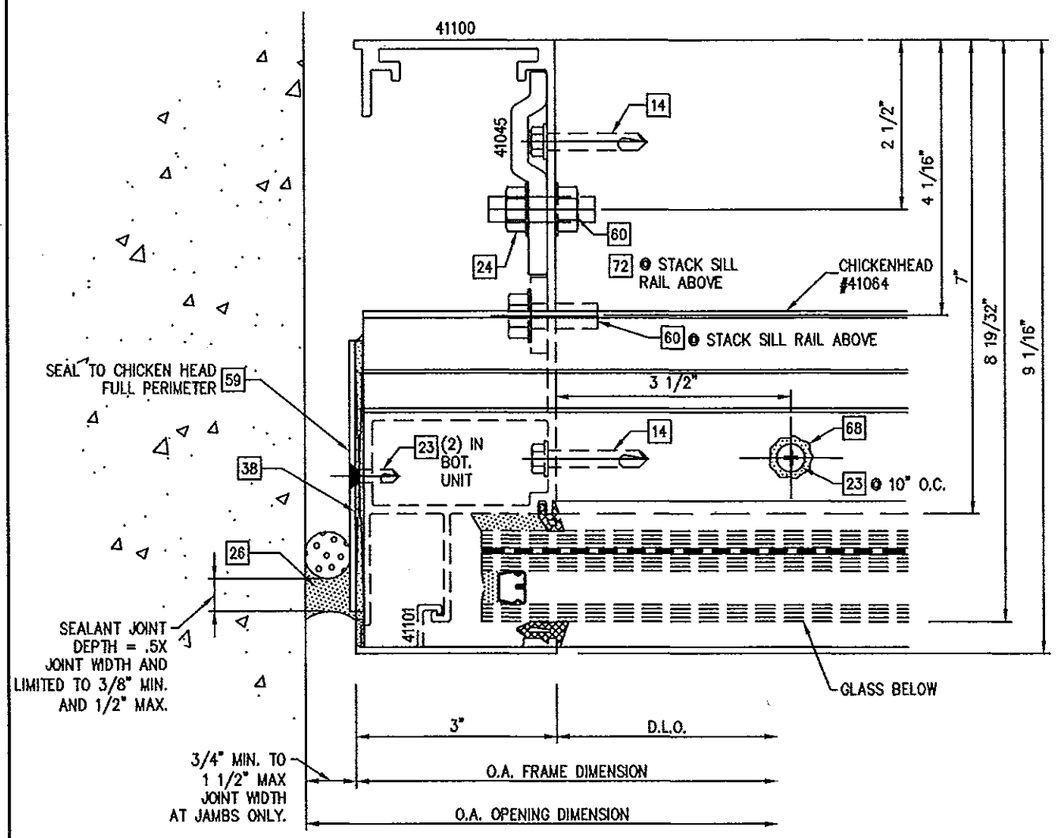

1/24 TYPICAL JAMB DETAIL AT END DAM

1 3/8" CAPTURED GLASS OPTION

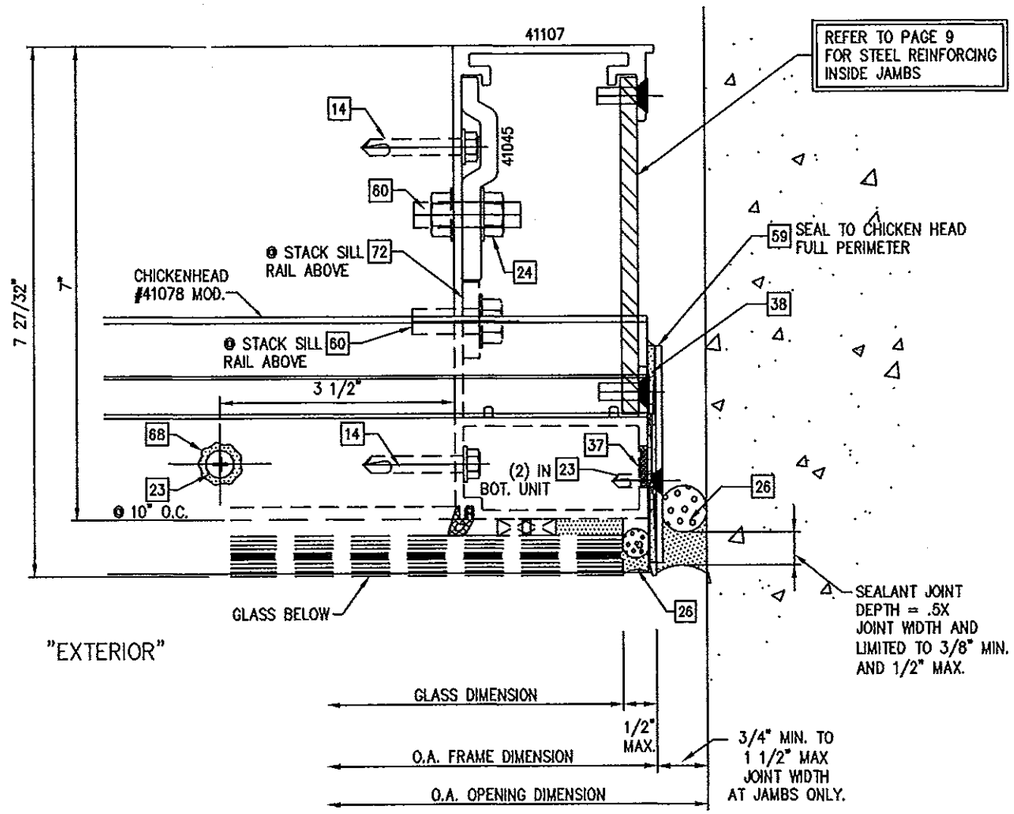

2/24 TYPICAL JAMB DETAIL AT END DAM

9/16" STRUCTURALLY GLAZED GLASS OPTION

NOTE:
SEE SHEET 17 FOR OPTIONAL GLAZING DETAILS

ALTERNATE PERIMETER SEALANT TYPES AND JOINT SIZES SHALL BE DESIGNED AND APPROVED BY DESIGN PROFESSIONAL OF RECORD AND OR THE SEALANT MANUFACTURER

PERIMETER SEALANT OPTIONS:
DOW-CORNING 790 SILICONE
DOW-CORNING 791 SILICONE
DOW-CORNING 795 SILICONE

FOR MIAMI-DADE CO. B.C.C.O.

PRODUCT REVISED
as complying with the Florida Building Code
Acceptance No 14-0527.02
Expiration Date June 3, 2019
By Manuel Sanz
Miami-Dade Product Control

enclos corp
2770 Blue Water Road
Eagan, MN 55121-1400
Tel. 651-796-6100 • Fax 651-994-6360
Engineering Locations
Eagan, MN • Montreal, QC, CA • Moncton, NB, CA
St. Louis, MO • Manila, PH

REVISIONS

WILLIAM D. COOK LICENSE No. 43904 STATE OF FLORIDA PROFESSIONAL ENGINEER
AUG 13 2014
Reviewed For Structural Integrity Only

BROMLEY - COOK ENGINEERING, INC.
STRUCTURAL ENGINEERING SERVICES
5440 N.W. 33RD AVENUE SUITE 100
FORT LAUDERDALE, FLORIDA 33309-1
TEL: (954) 772-4624 FAX: (954) 772-
CERT. OF AUTH. #00009124
WILLIAM D. COOK P.E.
FLA P.E. # 43904
FLA S.I. # 2008

Date	Scale
8/13/14	

Drawing No.
7030TSLMI

Drawing Title
7030 SERIES CURTAIN WALL
TWIN SPAN
LARGE MISSILE IMPACT

Sheet No.
24/31

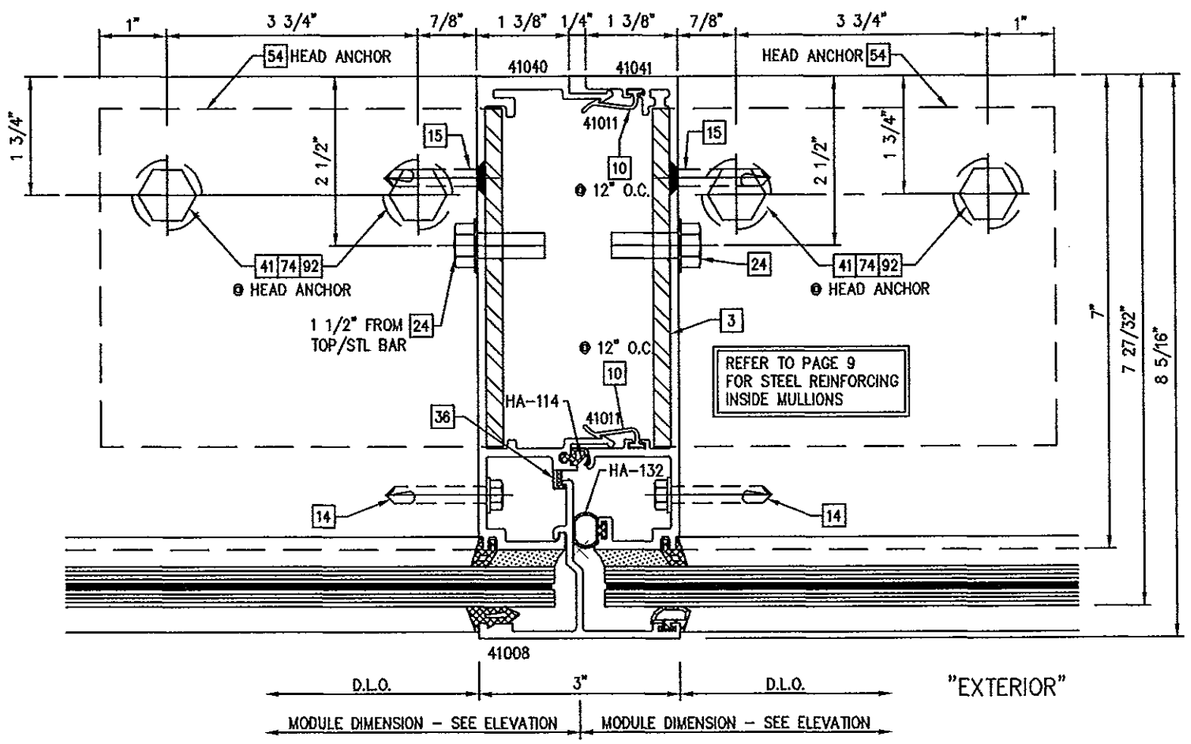

1/25 TYPICAL MULLION DETAIL AT HEAD ANCHOR
9/16" CAPTURED GLASS

NOTE:
SEE SHEET 21 FOR OPTIONAL GLAZING DETAILS

FOR MIAMI-DADE CO. B.C.C.O.

PRODUCT REVISED
as complying with the Florida
Building Code
Acceptance No 14-0527.02
Expiration Date June 3, 2019
By Manuel Saez
Miami-Dade Product Control

enclos corp

2770 Blue Water Road
Eagan, MN 55121-1400
Tel. 651-796-6100 • Fax 651-994-6380
Engineering Locations
Eagan, MN • Montreal, QC, CA • Moncton, NB, CA
St. Louis, MO • Manila, PH

REVISIONS

SEAL:
WILLIAM D. COOK LICENSE No 43904 STATE OF FLORIDA PROFESSIONAL ENGINEER
AUG 13 2014
Reviewed For Structural Integrity Only

BROMLEY • COOK ENGINEERING, INC.
STRUCTURAL ENGINEERING SERVICES
5440 N.W. 33RD AVENUE SUITE 100
FORT LAUDERDALE, FLORIDA 33309
TEL: (954) 772-4624 FAX: (954) 772-4634
CERT. OF AUTH. #00009124
WILLIAM D. COOK P.E.
FLA P.E. # 43904
FLA S.I. # 2008

Date	Scale
8/13/14	

Drawing No.
7030TSLMI

Drawing Title
7030 SERIES CURTAIN WALL
TWIN SPAN
LARGE MISSILE IMPACT

Sheet No.
25/31

MAX. DESIGN PRESSURES (P.S.F.) FOR VARIOUS ANCHOR OPTIONS

MODULE WD. D.L.O.	MULLION HGT.	ANCHOR OPTIONS: ANCHOR TYPE "H1"	ANCHOR TYPE "S1"	ANCHOR TYPE "H2"	
42" 48" 52" 54" 57"	98"	+110, -130	+110, -130	+110, -130	
42" 48" 52" 54" 57"	114"				
42" 48" 52" 54" 57"	120"				
42" 48" 52" 54" 57"	132"				
48" 52" 54" 57"	144"				
42" 48" 52" 54" 57"	161 9/16"	+110, -130	+110, -130	+110, -130	

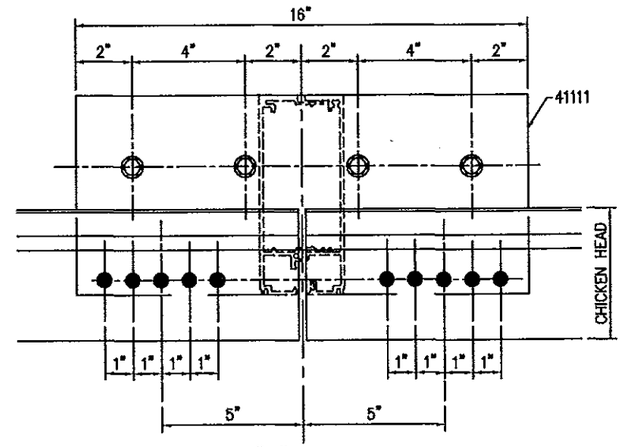

A/26 DETAIL "A"
ANCHOR LAYOUT AT MULLION (PLAN VIEW)

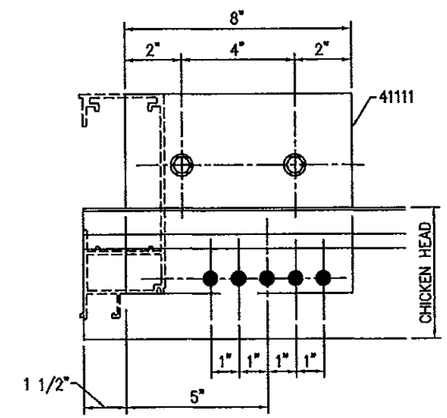

B/26 DETAIL "B"
ANCHOR LAYOUT AT JAMB (PLAN VIEW)

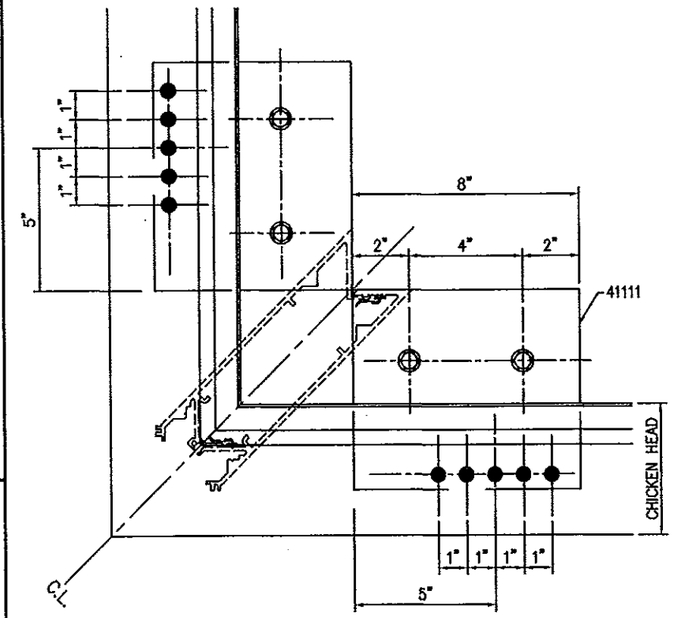

C/26 DETAIL "C"
ANCHOR LAYOUT AT CORNER MULLION (PLAN VIEW)

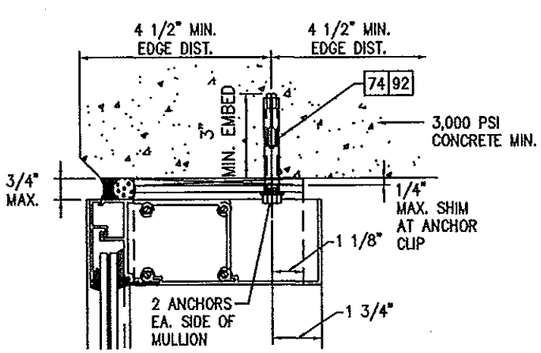

TYPE H1" -HEAD ANCHOR

STEEL "L" ANCHOR CLIPS W/ (2) 1/2" DIA. POWER BOLTS OR RAWL WEDGE BOLTS INTO CONC. SUBSTRSATE

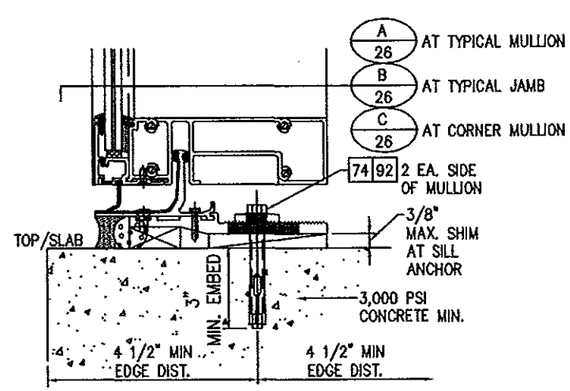

TYPE "S1" -SILL ANCHOR

EXTRUDED ALUM. ANCHOR PLATE W/ 1/2" DIA. POWER BOLTS OR RAWL WEDGE BOLTS INTO CONC. SUBSTRATE

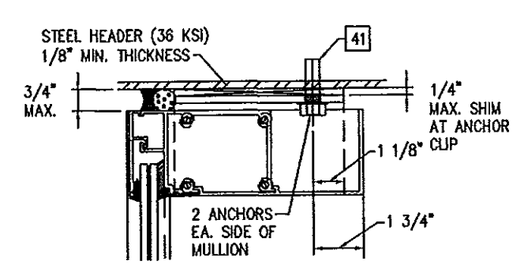

TYPE "H2" -HEAD ANCHOR

STEEL "L" ANCHOR CLIPS W/ 1/2-13 X 1 1/2" GRADE 5 ZINC PL. H.W.H. TAPTITE SCREWS INTO STEEL SUBSTRATE

FOR MIAMI-DADE CO. B.C.C.O.

PRODUCT REVISED
as complying with the Florida
Building Code
Acceptance No 14-0527.02
Expiration Date June 3, 2019
By Manuel Diaz
Miami Dade Product Control

enclos corp
2770 Blue Water Road
Eagan, MN 55121-1400
Tel. 651-796-6100 • Fax 651-994-6380
Engineering Locations
Eagan, MN • Montreal, QC, CA • Moncton, NB, CA
St. Louis, MO • Manila, PH

REVISIONS

SEAL:
WILLIAM D. COOK LICENSE No 43904 STATE OF FLORIDA PROFESSIONAL ENGINEER
AUG 19 2014
Reviewed For Structural Integrity Only

BROMLEY • COOK ENGINEERING, INC.
STRUCTURAL ENGINEERING SERVICES
5440 N.W. 33RD AVENUE SUITE 100
FORT LAUDERDALE, FLORIDA 33309
TEL: (954) 772-4624 FAX: (954) 772-4624
CERT. OF AUTH. #00009124
WILLIAM D. COOK P.E.
FLA P.E. # 43904
FLA S.I. # 2308

Date	Scale
8/13/14	

Drawing No.
7030TSLMI

Drawing Title
7030 SERIES CURTAIN WALL
TWN SPAN
LARGE MISSILE IMPACT

Sheet No.
26/31

MAX. DESIGN PRESSURES (P.S.F.) FOR VARIOUS ANCHOR OPTIONS

MODULE WD. D.L.O.	MULLION HGT.	ANCHOR OPTIONS: ANCHOR TYPE "MID-1"	ANCHOR OPTIONS: ANCHOR TYPE "MID-2"			
42" 48" 52" 54" 57"	96"	+110, −130	+110, −130			
42" 48" 52" 54" 57"	98"					
42" 48" 52" 54" 57"	114"					
42" 48" 52" 54" 57"	120"					
42" 48" 52" 54" 57"	132"					
42" 48" 52" 54" 57"	144"					
42" 48" 52" 54" 57"	161 9/16"	+110, −130	+110, −130			

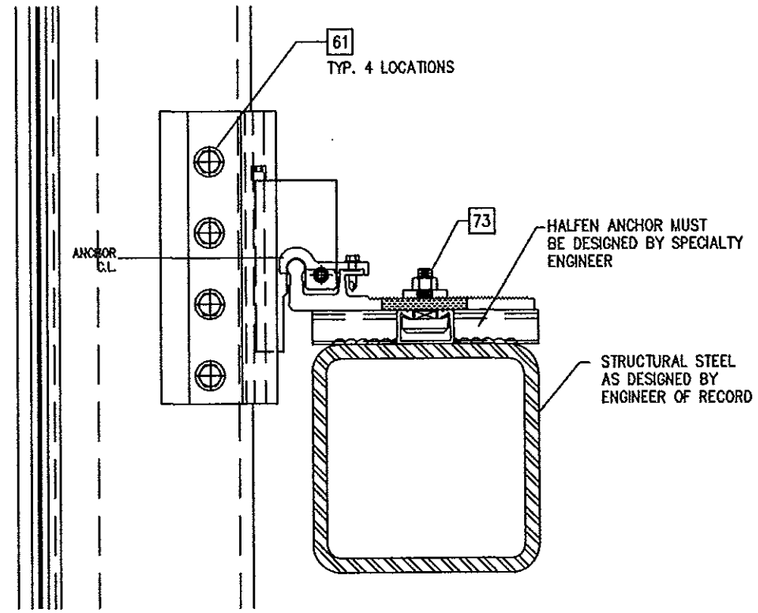

TYPE "MID-1" MID-SPAN ANCHOR

EXTRUDED ALUM. ANCHOR PLATE W/ 1/2"ø (M12) GRADE 8.8
HI TENSILE TEE-BOLT FOR HALFEN 5030HTA ANCHOR CHANNEL

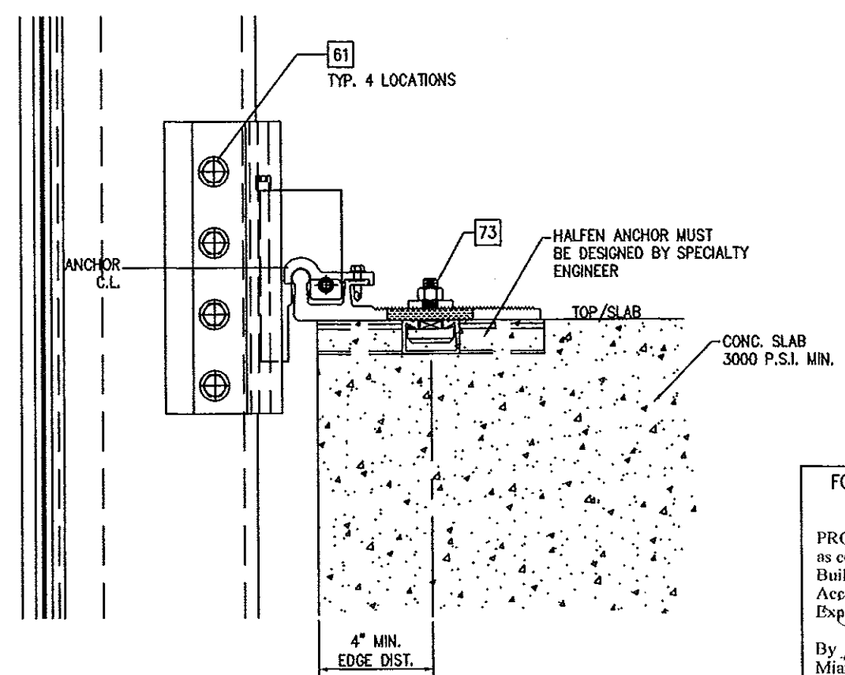

TYPE "MID-2" MID-SPAN ANCHOR

EXTRUDED ALUM. ANCHOR PLATE W/ 1/2"ø (M12) GRADE 8.8
HI TENSILE TEE-BOLT FOR HALFEN 5030HTA ANCHOR CHANNEL

FOR MIAMI-DADE CO. B.C.C.O.

PRODUCT REVISED
as complying with the Florida
Building Code
Acceptance No 14-0527.02
Expiration Date June 3, 2019
By Manuel Inez
Miami-Dade Product Control

enclos corp
2770 Blue Water Road
Eagan, MN 55121-1400
Tel. 651-796-6100 • Fax 651-994-6380
Engineering Locations
Eagan, MN • Montreal, QC, CA • Moncton, NB, CA
St. Louis, MO • Manila, PH

REVISIONS

WILLIAM D. COOK LICENSE No 43904 STATE OF FLORIDA PROFESSIONAL ENGINEER
SEAL:
AUG 31 2014
Reviewed For Structural Integrity Only

BROMLEY · COOK ENGINEERING, INC.
STRUCTURAL ENGINEERING SERVICES
5440 N.W. 33RD AVENUE SUITE 100
FORT LAUDERDALE, FLORIDA 33309
TEL: (954) 772-4624 FAX: (954) 772-4624
CERT. OF AUTH. #00009124
WILLIAM D. COOK P.E.
FLA P.E. # 43904
FLA St. # 2008

Date	Scale
8/13/14	

Drawing No. 7030TSLMI

Drawing Title
7030 SERIES CURTAIN WALL
TWIN SPAN
LARGE MISSILE IMPACT

Sheet No. 27/31

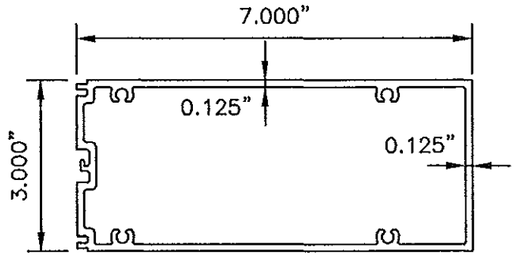

41048
(3" INTERMEDIATE HORIZONTAL)

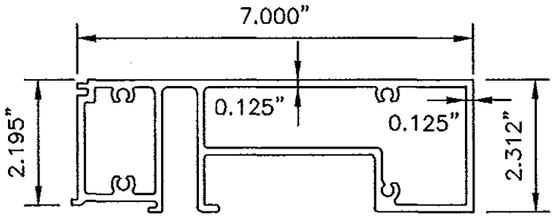

41058
(HORIZONTAL STACK- UPPER)

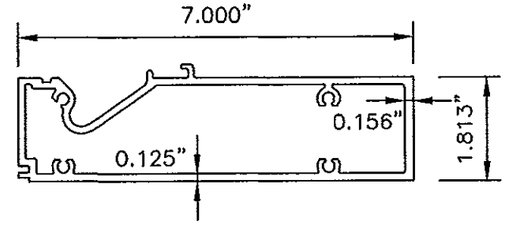

41059
(HORIZONTAL STACK- LOWER)

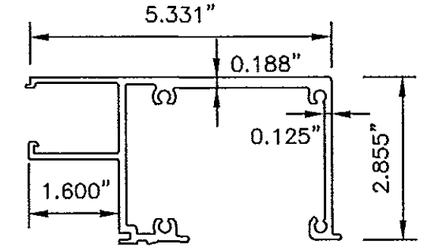

41140
(FRAME HEAD – 1 3/8" CAPTURED GLASS)

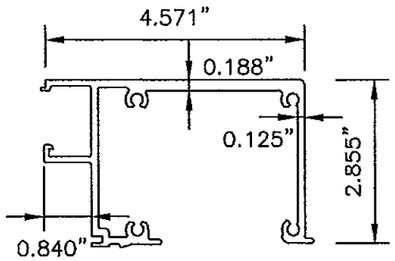

41139
(FRAME HEAD – 9/16" CAPTURED GLASS)

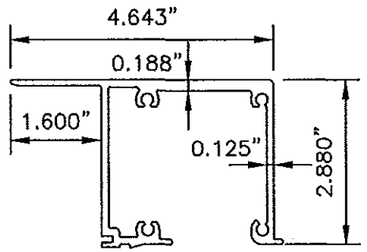

41066
(FRAME HEAD – 1 3/8" STRUCTURALLY GLAZED GLASS)

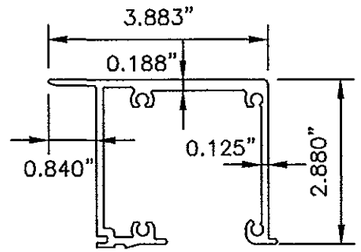

41013
(FRAME HEAD – 9/16" STRUCTURALLY GLAZED GLASS)

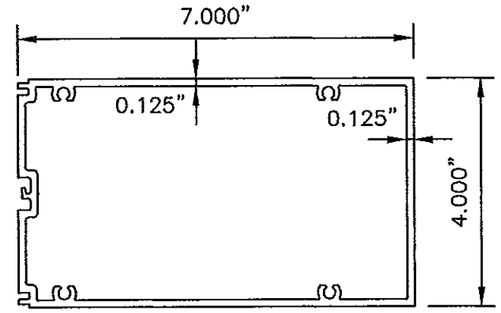

41118
(4" INTERMEDIATE HORIZONTAL)

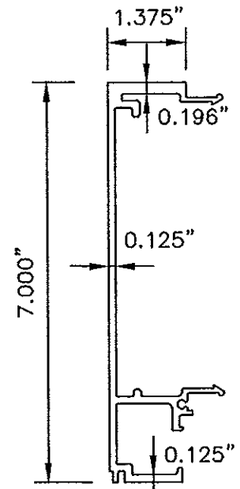

41040
(3" MALE MULLION HALF)

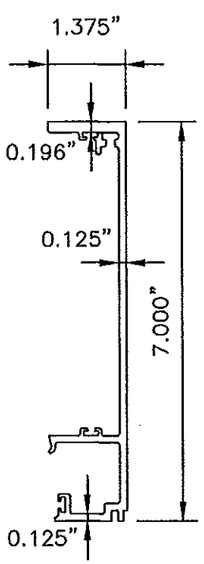

41041
(3" FEMALE MULLION HALF)

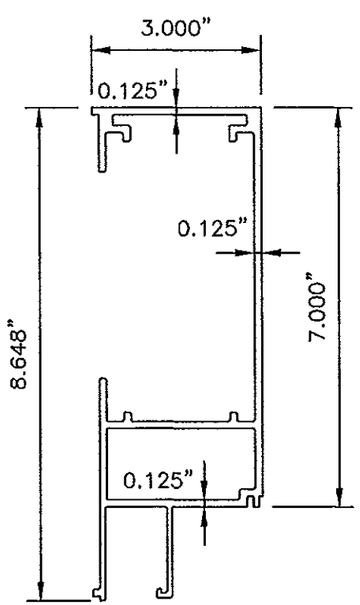

41100
(JAMB – 1 3/8" CAPTURED GLASS)

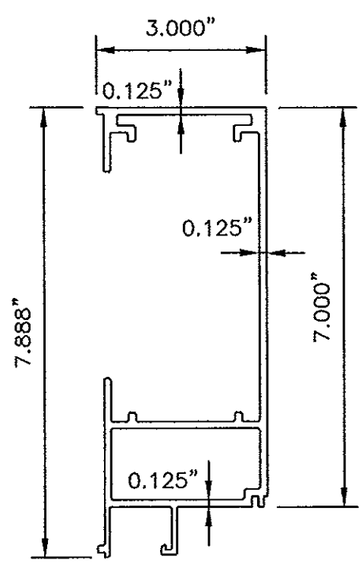

41142
(JAMB – 9/16" CAPTURED GLASS)

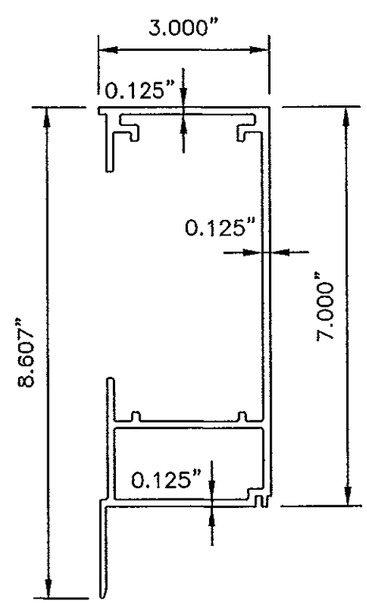

41108
(JAMB – 1 3/8" STRUCTURALLY GLAZED GLASS)

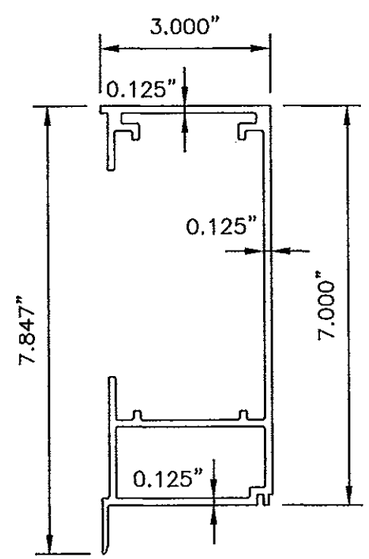

41107
(JAMB – 9/16" STRUCTURALLY GLAZED GLASS)

EXTRUSIONS (6063–T6 ALLOY)

FOR MIAMI–DADE CO. B.C.C.O.

PRODUCT REVISED
as complying with the Florida
Building Code
Acceptance No 14-0527.02
Expiration Date June 3, 2019
By Manuel Perez
Miami-Dade Product Control

enclos corp

2770 Blue Water Road
Eagan, MN 55121-1400
Tel. 651-796-6100 • Fax 651-994-6300
Engineering Locations
Eagan, MN • Montreal, QC, CA • Moncton, NB, CA
St. Louis, MO • Manila, PH

REVISIONS

WILLIAM D. COOK
LICENSE No 43904
STATE OF FLORIDA
PROFESSIONAL ENGINEER
SEAL:
AUG 13 2014
Reviewed For Structural Integrity Only

BROMLEY · COOK ENGINEERING, INC.
STRUCTURAL ENGINEERING SERVICES
5440 N.W. 33RD AVENUE SUITE 101
FORT LAUDERDALE, FLORIDA 33309
TEL: (954) 772-4624 FAX: (954) 772-9834
CERT. OF AUTH. #00009124
WILLIAM D. COOK P.E.
FLA P.E. # 43904
FLA S.I. # 2008

Date	Scale
8/13/14	

Drawing No.
7030TSLMI

Drawing Title
7030 SERIES CURTAIN WALL
TWIN SPAN
LARGE MISSILE IMPACT

Sheet No.
28/31

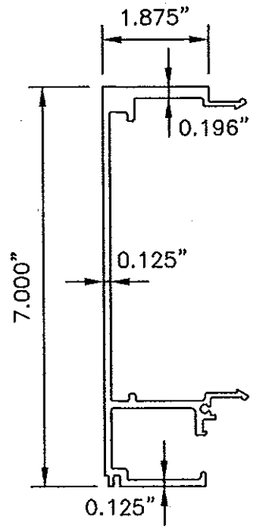

41112
(4" MALE MULLION HALF)

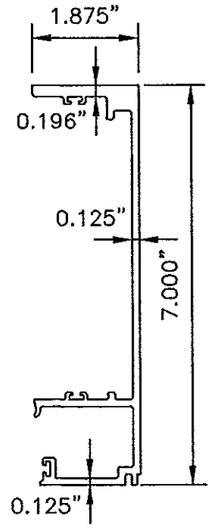

41113
(4" FEMALE MULLION HALF)

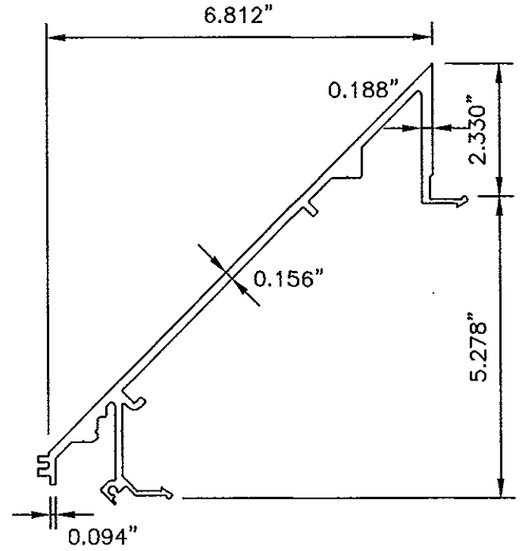

41067
(CORNER MULLION – MALE)

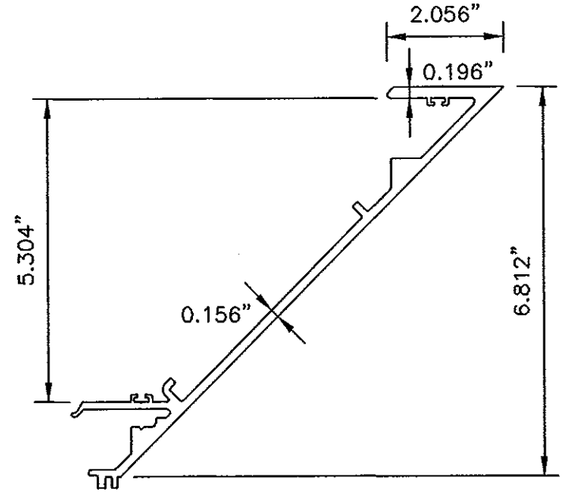

41068
(CORNER MULLION – FEMALE)

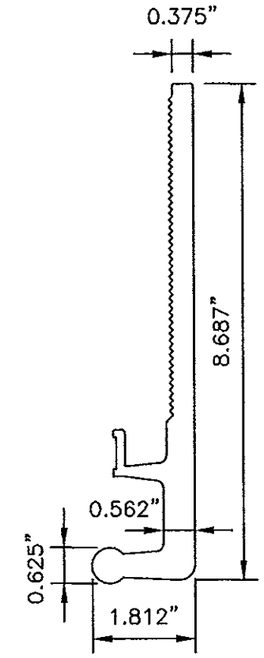

41097
(MID-SPAN ANCHOR)

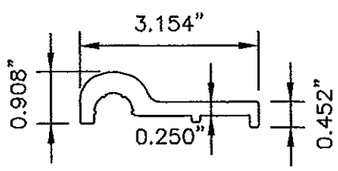

41098
(MID-SPAN ANCHOR RETAINER CLIP)

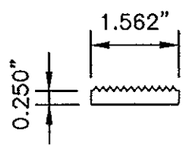

41012
(ANCHOR BOLT WASHER)

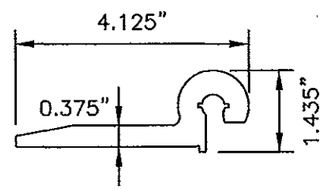

41095
(MULL – JAMB ANCHOR FIST)

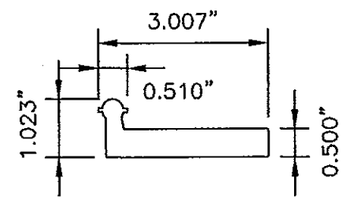

41096
(MULL – JAMB ANCHOR HOOK)

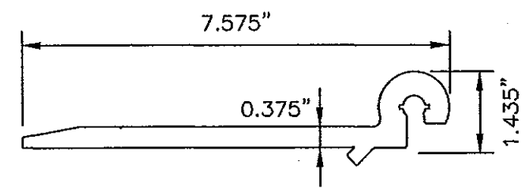

41105
(CORNER MULLION ANCHOR FIST)

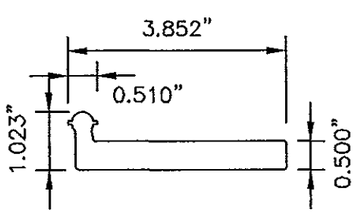

41106
(CORNER MULLION ANCHOR HOOK)

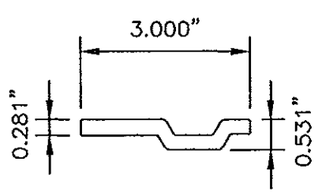

41045
(SPLICE BAR/LIFT LUG)

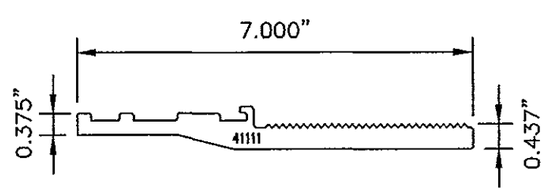

41111
(STARTER SILL ANCHOR PLATE)

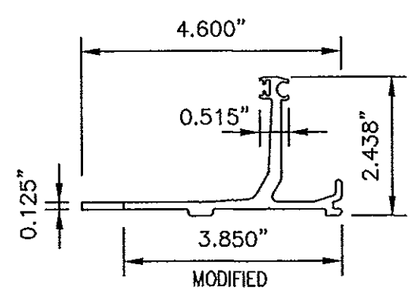

41078
(CHICKEN HEAD – 1 3/8" STRUCTURALLY GLAZED GLASS – MODIFY FOR 9/16" GLASS)

EXTRUSIONS (6063-T6 ALLOY)

FOR MIAMI-DADE CO. B.C.C.O.

PRODUCT REVISED
as complying with the Florida Building Code
Acceptance No 14-0527.02
Expiration Date June 3, 2019
By Manuel Perez
Miami Dade Product Control

enclos corp

2770 Blue Water Road
Eagan, MN 55121-1400
Tel. 651-796-6100 • Fax 651-994-6360

Engineering Locations
Eagan, MN • Montreal, QC, CA • Moncton, NB, CA
St. Louis, MO • Manila, PH

REVISIONS

WILLIAM D. COOK
LICENSE
No 43904
STATE OF FLORIDA
PROFESSIONAL ENGINEER
SEAL
AUG 13 2014
Reviewed for Structural Integrity Only

BROMLEY • COOK ENGINEERING, INC.
STRUCTURAL ENGINEERING SERVICES
5440 N.W. 33RD AVENUE SUITE 100
FORT LAUDERDALE, FLORIDA 33309
TEL: (954) 772-4624 FAX: (954) 772-
CERT. OF AUTH. #00009124
WILLIAM D. COOK P.E.
FLA P.E. # 43904
FLA S.I. # 2008

Date	Scale
8/13/14	

Drawing No.
7030TSLMI

Drawing Title
7030 SERIES CURTAIN WALL
TWIN SPAN
LARGE MISSILE IMPACT

Sheet No.
29/31

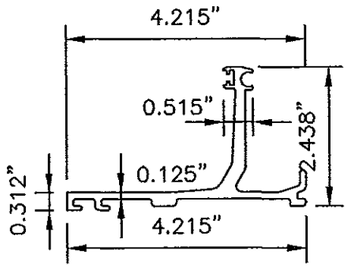

41057
(CHICKEN HEAD – 9/16" CAPTURED GLASS)

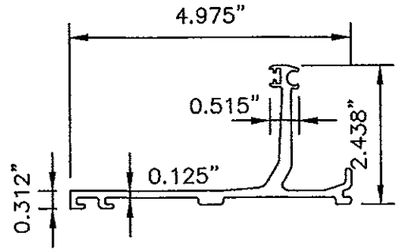

41064
(CHICKEN HEAD – 1 3/8" CAPTURED GLASS)

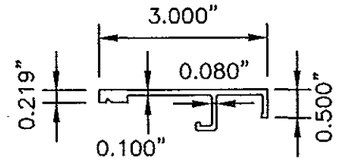

41101
(JAMB COVER)

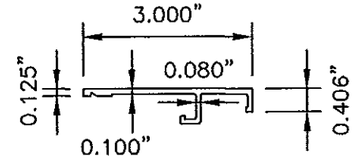

41102
(HEAD / SILL COVER)

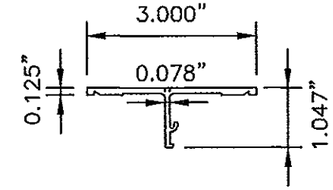

41028
(HORIZONTAL COVER)

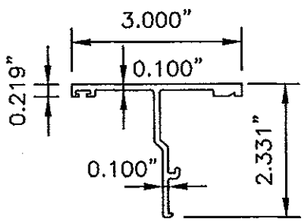

41008
(VERTICAL COVER – 9/16" GLASS)

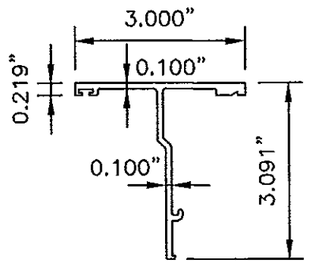

41009
(VERTICAL COVER – 1 3/8" GLASS)

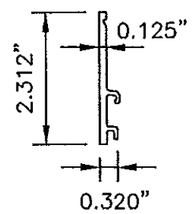

41061
(SILL COVER @ STACK RAIL – UPPER SPAN SILL)

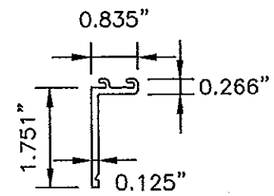

41062
(SILL COVER @ STACK RAIL – LOWER SPAN HEAD)

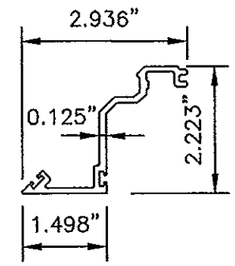

41071
(CORNER MULLION TRIM FOR 1 3/8" STRUCTURALLY GLAZED GLASS)

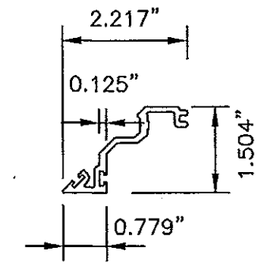

41072
(CORNER MULLION TRIM FOR 9/16" STRUCTURALLY GLAZED GLASS)

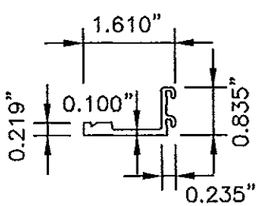

41075
(CORNER MULLION COVER)

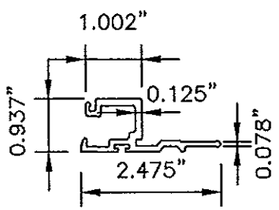

41060
(SETTING CHAIR AT STACK RAIL – 9/16" CAPTURED GLASS)

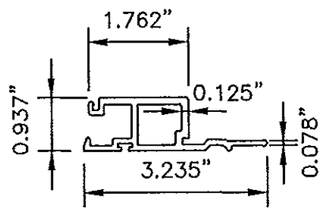

41065
(SETTING CHAIR AT STACK RAIL – 1 3/8" CAPTURED GLASS)

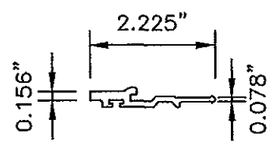

41060
(SETTING CHAIR AT STACK RAIL – 9/16"STRUCTURALLY GLAZED GLASS)

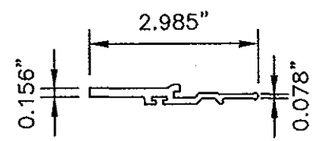

41077
(SETTING CHAIR AT STACK RAIL – 9/16"STRUCTURALLY GLAZED GLASS)

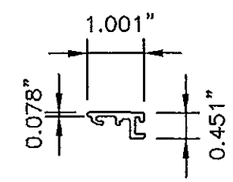

41027
(SETTING CHAIR 9/16" GLASS)

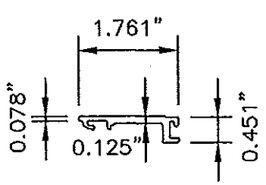

41043
(SETTING CHAIR 1 3/8" GLASS)

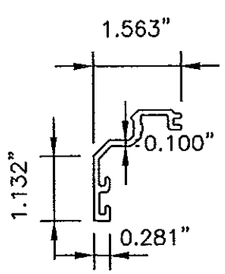

41069
(CORNER MULLION END CAP 9/16" CAPTURED GLASS)

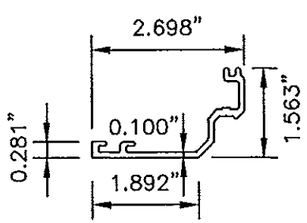

41070
(CORNER MULLION END CAP 1 3/8" CAPTURED GLASS)

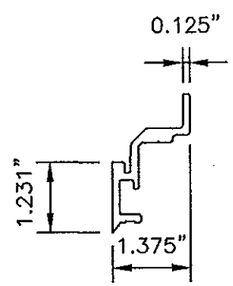

41063
(CORNER MULLION EXTENSION)

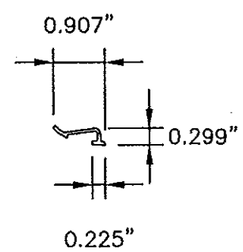

41011
(ANTI-BUCKLING CLIP)

EXTRUSIONS (6063-T6 ALLOY)

FOR MIAMI-DADE CO. B.C.C.O.

PRODUCT REVISED
as complying with the Florida Building Code
Acceptance No 14-0527.02
Expiration Date June 3, 2019
By Manuel Cruz
Miami Dade Product Control

enclos corp

2770 Blue Water Road
Eagan, MN 55121-1400
Tel. 651-796-6100 • Fax 651-994-6380
Engineering Locations
Eagan, MN • Montreal, QC, CA • Moncton, NB, CA
St. Louis, MO • Manila, PH

REVISIONS

WILLIAM D. COOK
LICENSE No 43904
STATE OF FLORIDA
PROFESSIONAL ENGINEER
Reviewed For Structural Integrity Only
AUG 13 2014

BROMLEY · COOK ENGINEERING, INC.
STRUCTURAL ENGINEERING SERVICES
5440 N.W. 33RD AVENUE SUITE 102
FORT LAUDERDALE, FLORIDA 33309
TEL: (954) 772-4624 FAX: (954) 772-1634
CERT. OF AUTH. #00009124
WILLIAM D. COOK P.E.
FLA P.E. # 43904
FLA S.I. # 2008

Date	Scale
8/13/14	

Drawing No.
7030TSLMI

Drawing Title
7030 SERIES CURTAIN WALL
TWIN SPAN
LARGE MISSILE IMPACT

Sheet No.
30/31

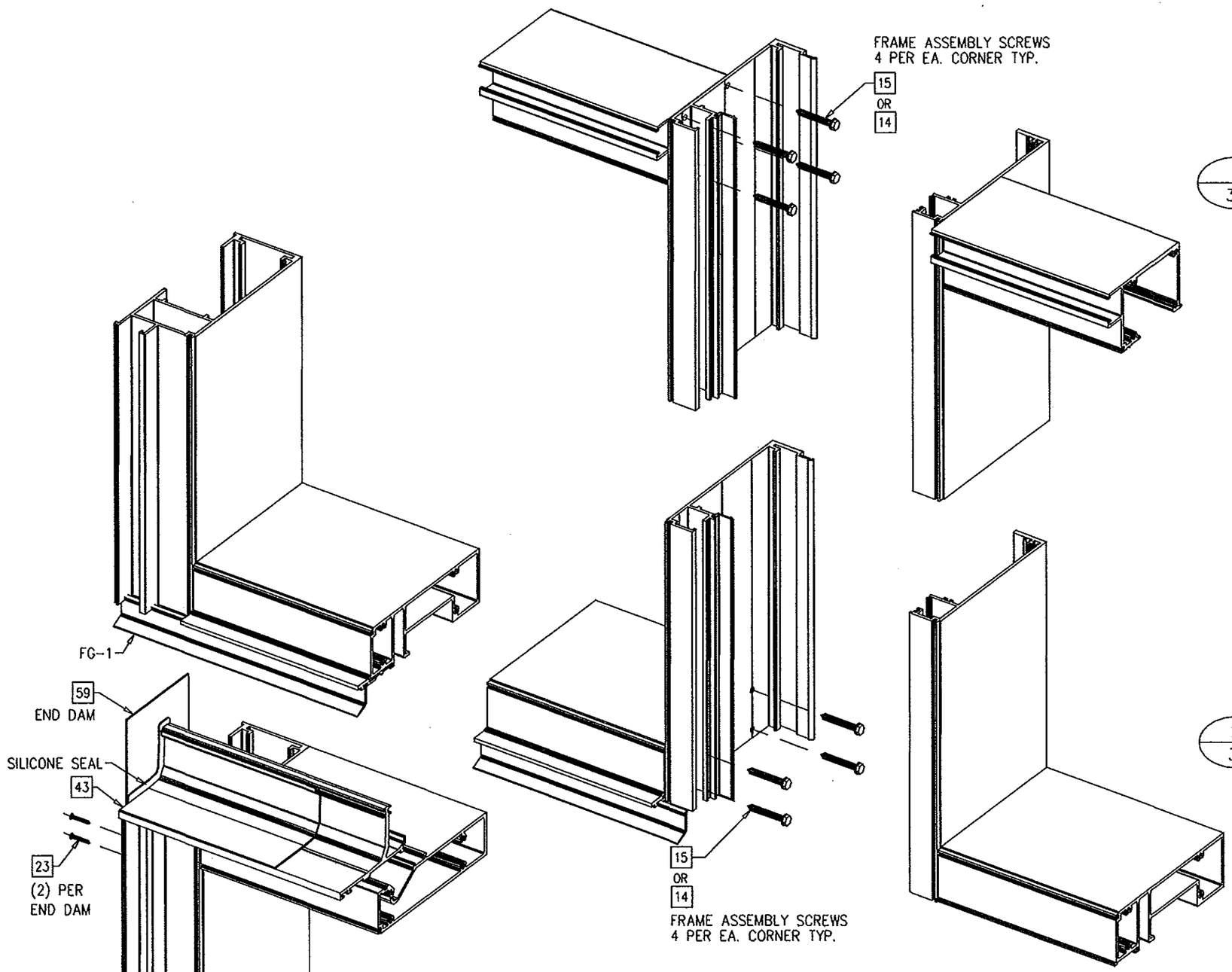

1/31 HEAD RAIL ISOMETRIC JOINERY DETAILS
SCALE: N.T.S.

2/31 SILL / STACK RAIL ISOMETRIC JOINERY DETAILS
SCALE: N.T.S.

FOR MIAMI-DADE CO. B.C.C.O.

PRODUCT REVISED
as complying with the Florida
Building Code
Acceptance No 14-0527.02
Expiration Date June 3, 2019
By Manuel Perez
Miami Dade Product Control

enclos corp

2770 Blue Water Road
Eagan, MN 55121-1400
Tel. 651-796-6100 • Fax 651-994-6360
Engineering Locations
Eagan, MN • Montreal, QC, CA • Moncton, NB, CA
St. Louis, MO • Manila, PH

REVISIONS

WILLIAM D. COOK
LICENSE
No 43904
STATE OF FLORIDA
PROFESSIONAL ENGINEER
SEAL
AUG 13 2014
Reviewed For Structural Integrity Only

BROMLEY - COOK ENGINEERING, INC.
STRUCTURAL ENGINEERING SERVICES
5440 N.W. 33RD AVENUE SUITE 100
FORT LAUDERDALE, FLORIDA 33309
TEL: (954) 772-4824 FAX: (954) 772-4825
CERT. OF AUTH. #00009124
WILLIAM D. COOK P.E.
FLA P.E. # 43904
FLA S.I. # 2008

Date	Scale
8/13/14	

Drawing No.
7030TSLMI

Drawing Title
7030 SERIES CURTAIN WALL
TWIN SPAN
LARGE MISSILE IMPACT

Sheet No.
31/31