MIAMI-DADE COUNTY
DEPARTMENT OF REGULATORY AND ECONOMIC RESOURCES (RER)
BOARD AND CODE ADMINISTRATION DIVISION

MIAMI-DADE COUNTY
PRODUCT CONTROL SECTION
11805 SW 26 Street, Room 208
T (786) 315-2590 F (786) 315-2599
www.miamidade.gov/economy

NOTICE OF ACCEPTANCE (NOA)

Gensteel Doors Inc.
4950 Hickmore Street
Ville St. Laurent, Quebec, Canada H4T1K6

SCOPE:

This NOA is being issued under the applicable rules and regulations governing the use of construction materials. The documentation submitted has been reviewed and accepted by Miami-Dade County RER - Product Control Section to be used in Miami Dade County and other areas where allowed by the Authority Having Jurisdiction (AHJ).

This NOA shall not be valid after the expiration date stated below. The Miami-Dade County Product Control Section (In Miami Dade County) and/or the AHJ (in areas other than Miami Dade County) reserve the right to have this product or material tested for quality assurance purposes. If this product or material fails to perform in the accepted manner, the manufacturer will incur the expense of such testing and the AHJ may immediately revoke, modify, or suspend the use of such product or material within their jurisdiction. RER reserves the right to revoke this acceptance, if it is determined by Miami-Dade County Product Control Section that this product or material fails to meet the requirements of the applicable building code.

This product is approved as described herein, and has been designed to comply with the Florida Building Code, including the High Velocity Hurricane Zone.

DESCRIPTION: Series "GenStorm" Steel Storefront System – L.M.I.

APPROVAL DOCUMENT: Drawing No. **AD14–01**, titled "GenStorm Steel Storefront System – LMI & SMI", sheets 1 through 8 of 8, dated 09/18/14, prepared by MCY Engineering, Inc., signed and sealed by Yiping Wang, P.E., bearing the Miami–Dade County Product Control Approval stamp with the Notice of Acceptance number and approval date by the Miami–Dade County Product Control Section.

MISSILE IMPACT RATING: Large and Small Missile Impact Resistant

LABELING: Each unit shall bear a permanent label with the manufacturer's name or logo, city, state, model/series, and following statement: "Miami-Dade County Product Control Approved", unless otherwise noted herein.

RENEWAL of this NOA shall be considered after a renewal application has been filed and there has been no change in the applicable building code negatively affecting the performance of this product.

TERMINATION of this NOA will occur after the expiration date or if there has been a revision or change in the materials, use, and/or manufacture of the product or process. Misuse of this NOA as an endorsement of any product, for sales, advertising or any other purposes shall automatically terminate this NOA. Failure to comply with any section of this NOA shall be cause for termination and removal of NOA.

ADVERTISEMENT: The NOA number preceded by the words Miami-Dade County, Florida, and followed by the expiration date may be displayed in advertising literature. If any portion of the NOA is displayed, then it shall be done in its entirety.

INSPECTION: A copy of this entire NOA shall be provided to the user by the manufacturer or its distributors and shall be available for inspection at the job site at the request of the Building Official.

This NOA consists of this page 1 and evidence pages E-1 and E-2, as well as approval document mentioned above.

The submitted documentation was reviewed by **Manuel Perez, P.E.**

MIAMI-DADE COUNTY APPROVED

9/30/14

NOTICE OF ACCEPTANCE: EVIDENCE SUBMITTED

A. DRAWINGS

1. Manufacturer's die drawings and sections.
2. Drawing No **AD14–01**, titled "GenStorm Steel Storefront System – LMI & SMI", sheets 1 through 8 of 8, dated 09/18/14, prepared by MCY Engineering, Inc., signed and sealed by Yiping Wang, P.E.

B. TESTS

1. Test reports on: 1) Air Infiltration Test, per FBC, TAS 202–94
   2) Uniform Static Air Pressure Test, Loading per FBC TAS 202–94
   3) Water Resistance Test, per FBC, TAS 202–94
   4) Large Missile Impact Test per FBC, TAS 201–94
   5) Cyclic Wind Pressure Loading per FBC, TAS 203–94
   6) Forced Entry Test, per FBC 2411 3.2.1, TAS 202–94

   along with marked-up drawings and installation diagram of a steel storefront system with outswing steel double doors, prepared by Fenestration Testing Laboratory, Inc., Test Report No. **FTL–7224**, dated 12/17/13, signed and sealed by Marlin D. Brinson, P.E.

C. CALCULATIONS

1. Anchor verification calculations and structural analysis, complying with **FBC - 5th Edition (2014),** dated 05/26/14 and 09/15/14, prepared by MCY Engineering, Inc., signed and sealed by Yiping Wang, P.E.
2. Glazing complies with **ASTM E1300-04.**

D. QUALITY ASSURANCE

1. Miami-Dade Department of Regulatory and Economic Resources (RER)

E. MATERIAL CERTIFICATIONS

1. Notice of Acceptance No. **13–0129.27** issued to **E.I. DuPont DeNemours & Co., Inc.** for their **"DuPont Butacite® PVB Interlayer"** dated 04/11/13, expiring on 12/11/16.
2. Notice of Acceptance No. **13-0909.10** issued to Polymer Extrusion Technology, Inc. dba Glasslam for their **"Glasslam Safety-Plus II Glass Interlayer"** dated 10/03/13, expiring on 08/07/18.
3. Notice of Acceptance No. **13–0717.01** issued to **Sabic Innovative Plastics** for their **"Lexan® Polycarbonate Sheet Products"**, dated November 28, 2013, expiring on July 17, 2018

Manuel Perez, P.E.
Product Control Examiner
NOA No. 14-0602.07
Expiration Date: October 02, 2019
Approval Date: October 02, 2014

NOTICE OF ACCEPTANCE: EVIDENCE SUBMITTED

F. STATEMENTS

1. Statement letter of conformance, complying with **FBC - 5th Edition (2014)**, dated September 15, 2014, issued by MCY Engineering, Inc., signed and sealed by Yiping Wang, P.E.
2. Statement letter of no financial interest, dated March 10, 2014, issued by MCY Engineering, Inc., signed and sealed by Yiping Wang, P.E.
3. Distributor Agreement between Gensteel Doors, Inc., Quebec Canada and North American Door Corp., Plattsburgh, New York, dated May 15, 2014, signed by Bruno Gervasi and Antonio Gervasi, respectively.
4. Proposal No. **12–0796** issued by the Product Control Section, dated July 10, 2012, signed by Manuel Perez, P.E.

G. OTHERS

1. None.

Manuel Perez, P.E.
Product Control Examiner
NOA No. 14-0602.07
Expiration Date: October 02, 2019
Approval Date: October 02, 2014

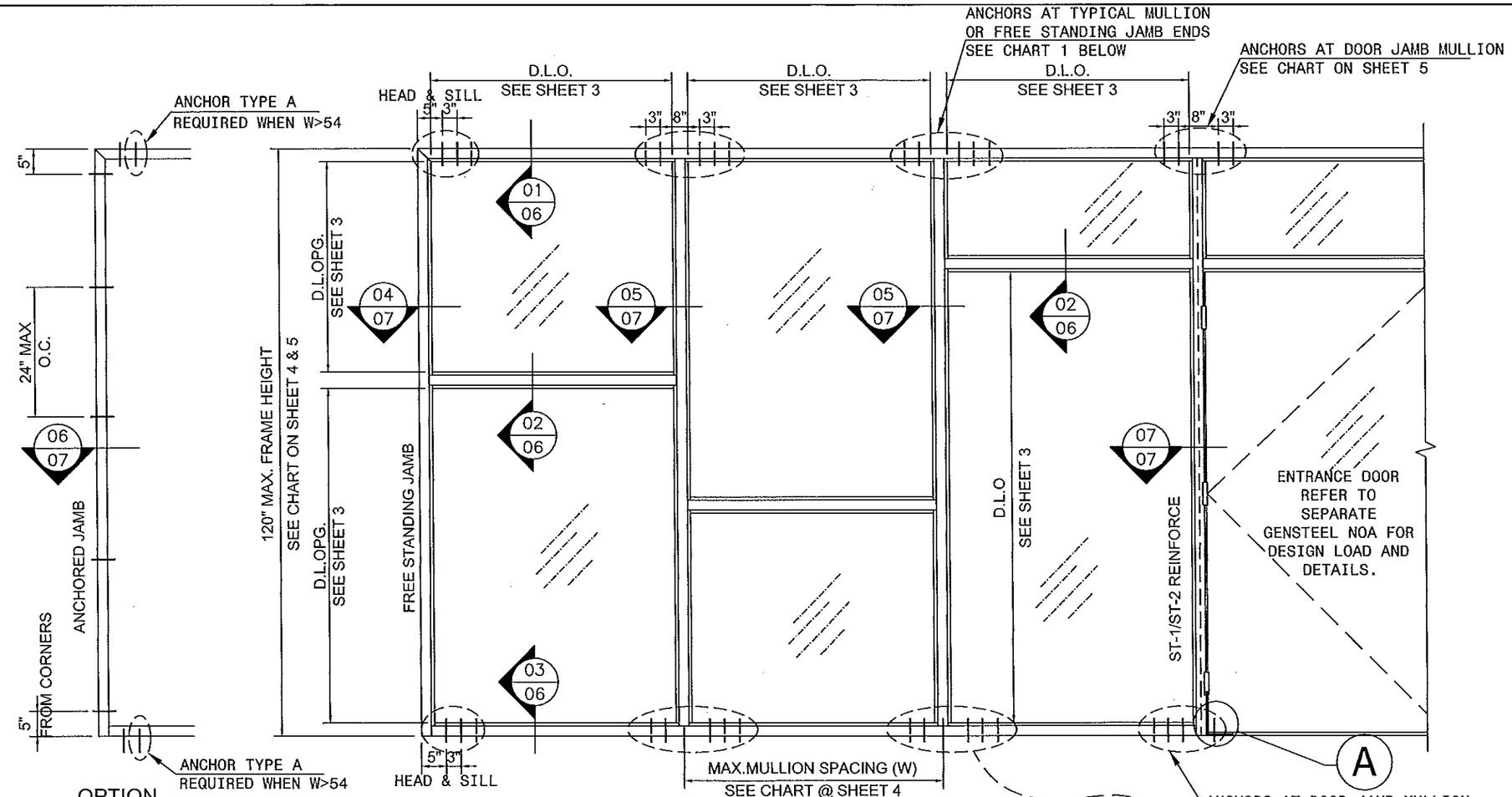

TYPICAL ELEVATION

GENSTEEL STEEL STORE FRONT SYSTEM

- THIS SYSTEM MAY BE USED IN CONJUNCTION WITH MIAMI-DADE COUNTY APPROVED ENTRANCE DOORS BY 'GENSTEEL DOORS INC.'
  CODE REQUIREMENTS FOR SAFEGUARDS MUST BE OBSERVED.
  - THIS PRODUCT HAS BEEN DESIGNED AND TESTED TO COMPLY WITH THE REQUIREMENTS OF THE FLORIDA BUILDING CODE 2010/2014 INCLUDING HIGH VELOCITY HURRICANE ZONE (HVHZ).
- ANCHORS SHALL BE AS LISTED, SPACED AS SHOWN ON ELEVATION & DETAILS. ANCHORS EMBEDMENT TO BASE MATERIAL SHALL BE BEYOND WALL DRESSING OR STUCCO.
- ANCHORING OR LOADING CONDITIONS NOT SHOWN IN THESE DETAILS ARE NOT PART OF THIS APPROVAL.
- MATERIALS INCLUDING BUT NOT LIMITED TO STEEL/METAL SCREWS, THAT COME INTO CONTACT WITH OTHER DISSIMILAR MATERIALS SHALL MEET THE REQUIREMENTS OF 2010/2014 FLORIDA BLDG. CODE SECTION AS APPLICABLE.
- ULTIMATE DESIGN LOAD OBTAINED FROM ASCE 7-10, MULTIPLY BY 0.6 SHALL BE LESS THAN OR EQUAL TO DESIGN LOAD IN THIS DOCUMENT. WOOD BUCKS MUST BE PROPERLY ATTACHED TO SUBSTRATE TO TRANSMIT WIND LOADS TO THE STRUCTURE .

INSTRUCTIONS:

USE CHARTS AS FOLLOWS

STEP 1 DETERMINE DESIGN WIND LOAD REQUIREMENTS BASED ON WIND VELOCITY, BLDG. HEIGHT, WIND ZONE USING ASCE 7-10 ALLOWABLE LOAD.

STEP 2 CHECK MULLION CAPACITY FOR A GIVEN SPACING AND HEIGHT USING CHARTS ON SHEET 4.
USE CHARTS ON SHEET 5 TO DETERMINE THE ALLOWABLE LOADS ON DOOR JAMB MULLION.

STEP 3 SEE CHARTS ON SHEETS 3 FOR DESIGN LOAD CAPACITY OF DESIRED GLASS SIZE AND GLASS TYPE.

STEP 4 THE LOWEST VALUE RESULTING FROM STEPS 2 AND 3 SHALL APPLY TO ENTIRE SYSTEM.

STEP 5 ANCHOR TYPES SEE SHEET 6 FOR DETAILS. NUMBER OF ANCHORS REQUIRED SEE CHART ON SHEET 1 & SHEET 5.

CHART 1 ANCHOR @ END OF MULLION

	TOTAL NUMBER OF ANCHORS				
MULLION TYPE/ANCHOR TYPE	A	A1	B	B1	C
UNREINFORCED MULLION	5	3	3	3	2
REINFORCED MULLION	6	4	4	4	4
FREE-STANDING JAMB					
	3	2	2	2	2

STOREFRONT SYSTEM IS RATED FOR LARGE & SMALL MISSILE IMPACT. SHUTTERS ARE NOT REQUIRED.

Approved as complying with the Florida Building Code
Date Sep 2 2014
NOA# 14-0602.07
Miami Dade Product Control
By Manuel Diaz

YIPING WANG, P.E.
FLORIDA REGISTRATION
PE #55983
C.A.N. 28677

REVISIONS

NO.	DATE	DESCRIPTION

MCY ENGINEERING, INC.
GLAZING CONSULTANTS
8501 SW 124 AVE. STE. 205A P: 305.271.0117
MIAMI, FL. 33183 F: 786.573.5063
www.MCYEngineering.com MCY.Engineering@Att.net

GENSTORM STEEL STOREFRONT SYSTEM - LMI & SMI

Genstee DOORS
www.gensteeldoors.com
4950 Hickmore, St. Laurent, Quebec, Canada, H4T1K6
Tel: (514) 733-3562 Fax: (514) 733-1932

DATE	09/18/2014
SCALE	AS NOTED
DRAWN	T.G.
PROJECT	MCY 14-014

DRAWING NO.
AD14-01

1 OF 8

SEP 26 2014

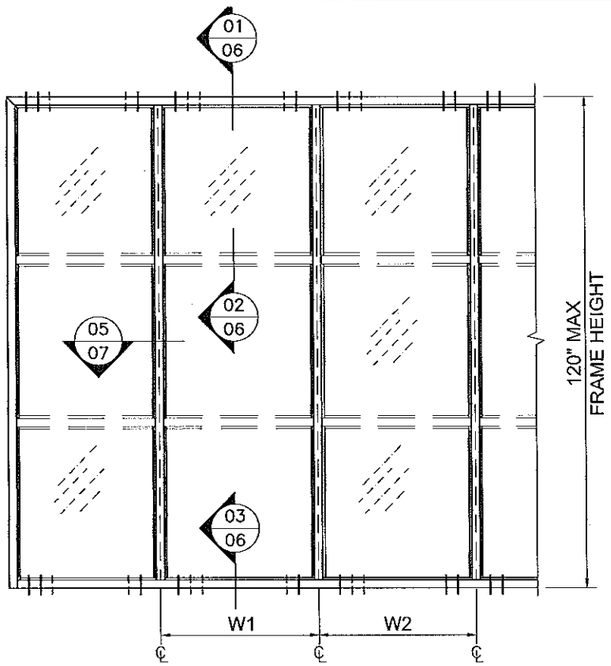

WIDTH (W) = $\frac{W1+W2}{2}$

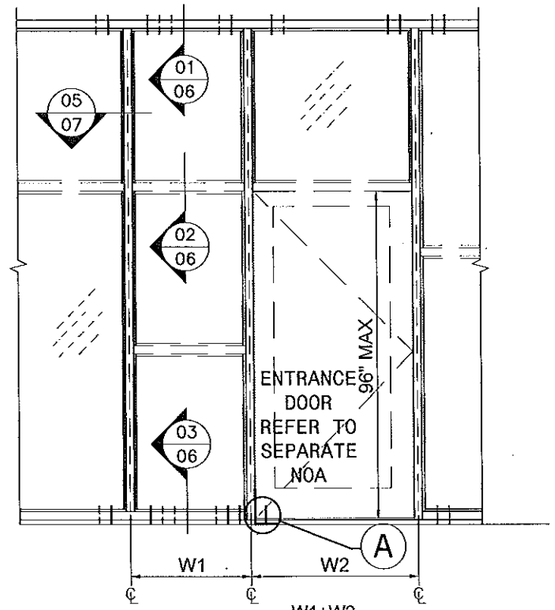

WIDTH (W) = $\frac{W1+W2}{2}$

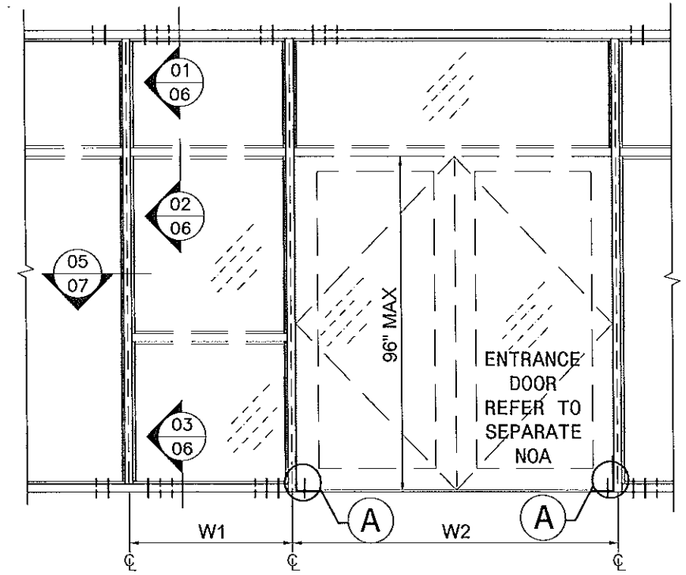

WIDTH (W) = $\frac{W1+W2}{2}$

ELEVATIONS FOR MULLION
(WITH STEEL REINFORCEMENT)

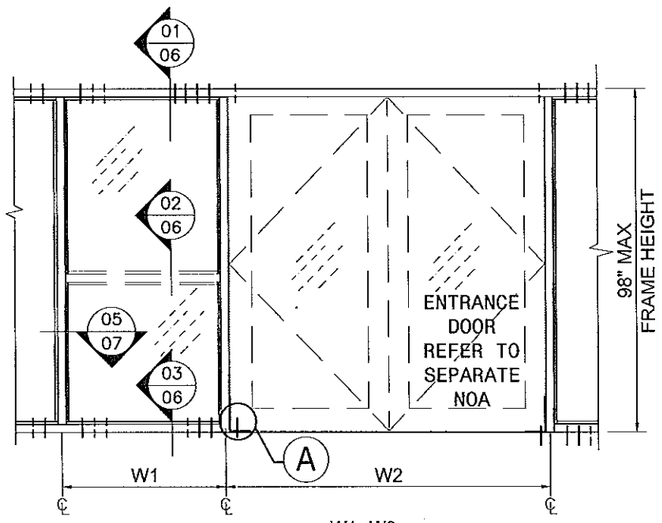

WIDTH (W) = $\frac{W1}{2}+\frac{W2}{4}$

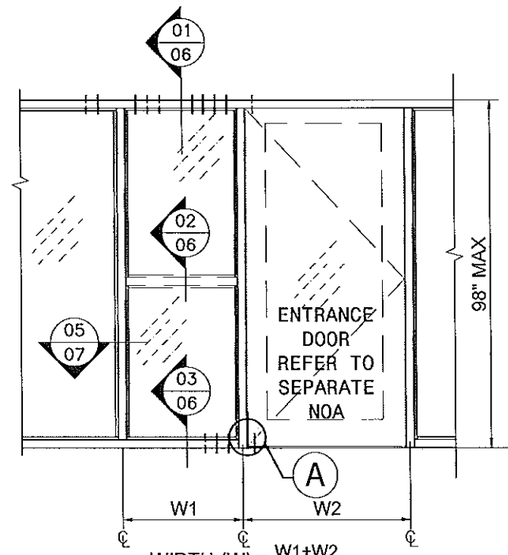

WIDTH (W) = $\frac{W1+W2}{2}$

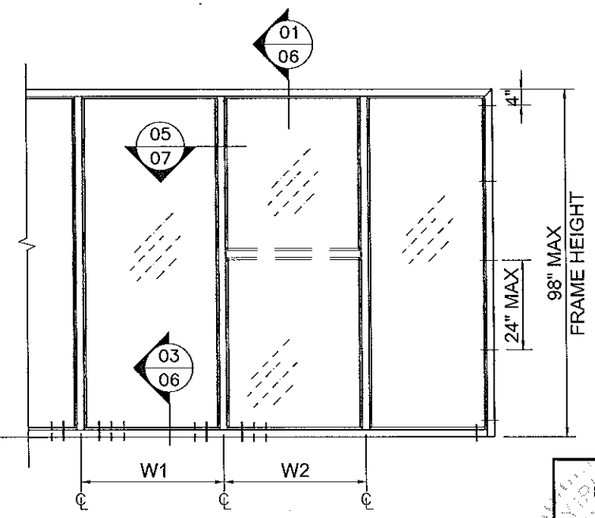

WIDTH (W) = $\frac{W1+W2}{2}$

ELEVATIONS FOR MULLION
(WITHOUT STEEL REINFORCEMENT)

Approved as complying with the
Florida Building Code
Date 09-23-2014
NOA# 14-0602.07
Miami Dade Product Control
By Manuel Perez

YIPING WANG, P.E.
FLORIDA REGISTRATION
PE #55983
C.A.N. 28677

SEP 26 2014

REVISIONS		
NO.	DATE	DESCRIPTION

MCY ENGINEERING, INC.
GLAZING CONSULTANTS
8501 SW 124 AVE. STE. 205A
MIAMI, FL. 33183
P: 305.271.0117
F: 786.573.5063
www.MCYEngineering.com
MCY.Engineering@Att.net

GENSTORM STEEL STOREFRONT SYSTEM - LMI & SMI

gensteel doors
www.gensteeldoors.com
4950 Hickmore, St. Laurent, Quebec, Canada, H4T1K6
Tel: (514) 733-3562 Fax: (514) 733-1932

DATE	09/18/2014
SCALE	AS NOTED
DRAWN	T.G.
PROJECT	MCY 14-014

DRAWING NO.
AD14-01

EXTERIOR GLAZED OPTION

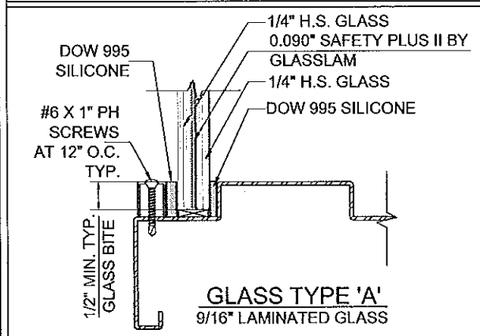

GLASS TYPE 'A'
9/16" LAMINATED GLASS

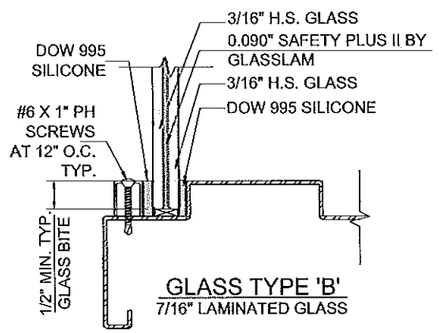

GLASS TYPE 'B'
7/16" LAMINATED GLASS

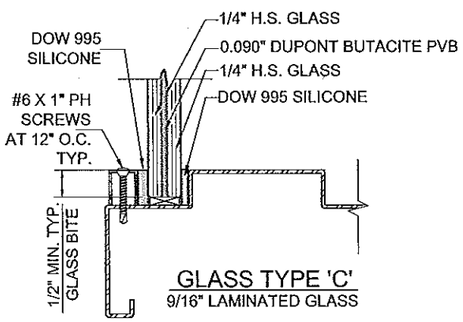

GLASS TYPE 'C'
9/16" LAMINATED GLASS

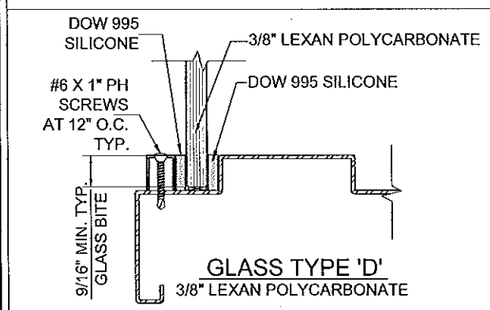

GLASS TYPE 'D'
3/8" LEXAN POLYCARBONATE

INTERIOR GLAZED OPTION

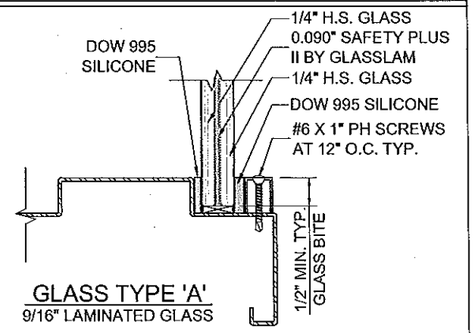

GLASS TYPE 'A'
9/16" LAMINATED GLASS

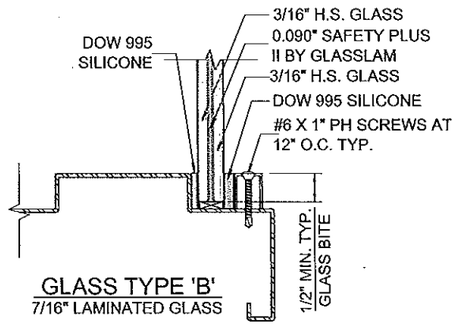

GLASS TYPE 'B'
7/16" LAMINATED GLASS

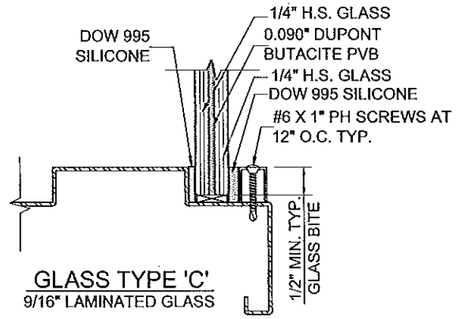

GLASS TYPE 'C'
9/16" LAMINATED GLASS

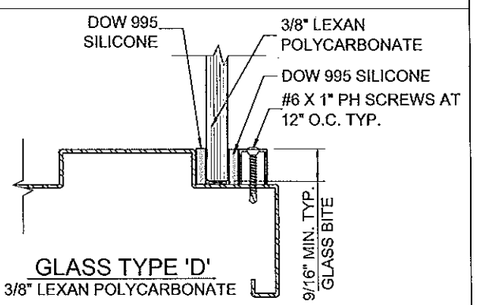

GLASS TYPE 'D'
3/8" LEXAN POLYCARBONATE

GLASS DESIGN LOAD CAPACITY - PSF					
D.L.O. WIDTH	D.L.O. HEIGH	GLASS AREA	GLASS TYPES "A"	"B"	"C"
(IN)	(IN)	FT^2	EXT.(+)/ INT.(-)	EXT.(+)/ INT.(-)	EXT.(+)/ INT.(-)
39	60	16.25	70	80	70
42		17.5	70	80	70
45		18.75	70	80	-
48		20	70	80	-
51		21.25	70	80	-
54		22.5	70	-	-
36	66	16.5	70	80	70
39		17.875	70	80	70
42		19.25	70	80	70
45		20.625	70	80	-
48		22	70	-	-
51		23.375	70	-	-
30	72	15.00	70	80	70
33		16.50	70	80	70
36		18.00	70	80	70
39		19.50	70	80	-
42		21.00	70	80	-
45		22.50	70	-	-
27	78	14.63	70	80	70
30		16.25	70	80	70
33		17.88	70	80	70
36		19.50	70	80	-
39		21.13	70	80	-
42		22.75	70	-	-

GLASS DESIGN LOAD CAPACITY - PSF					
D.L.O. WIDTH	D.L.O. HEIGH	GLASS AREA	GLASS TYPES "A"	"B"	"C"
(IN)	(IN)	FT^2	EXT.(+)/ INT.(-)	EXT.(+)/ INT.(-)	EXT.(+)/ INT.(-)
30.75	80.88	17.27	70	80	70
24	84	14.00	70	80	70
27		15.75	70	80	70
30		17.50	70	80	70
33		19.25	70	80	-
36		21.00	70	80	-
39		22.75	70	-	-
21	90	13.13	70	80	70
24		15.00	70	80	70
27		16.88	70	80	70
30		18.75	70	80	-
33		20.63	70	80	-
36		22.50	70	-	-
32.75	91.75	20.87	70	80	-
34.875	94.56	22.90	70	-	-
21	96	14.00	70	80	70
24		16.00	70	80	70
27		18.00	70	80	70
30		20.00	70	80	-
33		22.00	70	-	-

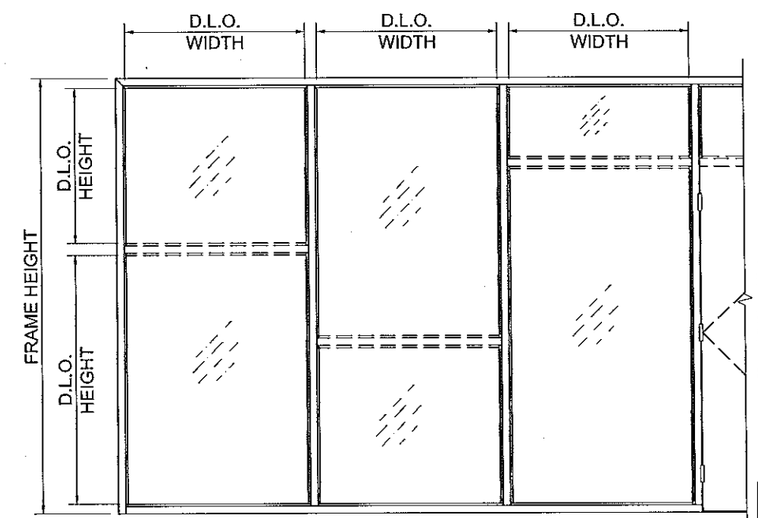

Approved as complying with the Florida Building Code
Date 09/2/2014
NOA# 14-0602.07
Miami Dade Product Control
By: Manuel Perez

NOTE:
GLASS CAPACITIES ON THIS SHEET ARE BASED ON ASTM E1300 (3 SEC. GUSTS)

VALUES SHOWN ABOVE ARE MAXIMUM DAYLITE OPENING DIMENSIONS. FOR GLASS. CONSULT WITH CHARTS AT SHEET 4 FOR MULLION CAPACITY.

YIPING WANG, P.E.
FLORIDA REGISTRATION
PE. #55983
C.A.N. 28677

SEP 26 2014

REVISIONS

NO.	DATE	DESCRIPTION

MCY ENGINEERING, INC.
GLAZING CONSULTANTS
8501 SW 124 AVE. STE. 205A MIAMI, FL 33183
P: 305.271.0117
F: 786.573.5063
www.MCYEngineering.com
MCY.Engineering@Att.net

GENSTORM STEEL STOREFRONT SYSTEM - LMI & SMI

gensteel DOORS
www.gensteeldoors.com
4950 Hickmore, St. Laurent, Quebec, Canada, H4T1K6
Tel: (514) 733-3562 Fax: (514) 733-1932

DATE	09/18/2014
SCALE	AS NOTED
DRAWN	T.G.
PROJECT	MCY 14-014

DRAWING NO.
AD14-01

MULLION/JAMB LOAD CAPACITY - PSF				
NOMINAL DIMS.		FREE STANDING JAMB	UNREINF. MULLION	REINF. MULLION
WIDTH (W)	FRAME HEIGHT	EXT.(+) & INT.(-)	EXT.(+) & INT.(-)	EXT.(+) & INT.(-)
IN	IN	PSF	PSF	PSF
24	72	70	70	80
27		70	70	80
30		70	70	80
33		70	70	80
36		70	70	80
39		70	70	80
42		70	70	80
45		70	70	80
48		70	70	80
51		70	-	80
54		70	-	80
57		70	-	80
60		70	-	80
24	78	70	70	80
27		70	70	80
30		70	70	80
33		70	70	80
36		70	70	80
39		70	70	80
42		70	70	80
45		70	70	80
48		70	-	80
51		70	-	80
54		70	-	80
24	84	70	70	80
27		70	70	80
30		70	70	80
33		70	70	80
36		70	70	80
39		70	70	80
42		70	70	80
45		70	-	80
48		70	-	80
51		70	-	80
24	90	70	70	80
27		70	70	80
30		70	70	80
33		70	70	80
36		70	70	80
39		70	70	80
42		70	-	80
45		70	-	80
48		70	-	80

MULLION/JAMB LOAD CAPACITY - PSF				
NOMINAL DIMS.		FREE STANDING JAMB	UNREINF. MULLION	REINF. MULLION
WIDTH (W)	FRAME HEIGHT	EXT.(+) & INT.(-)	EXT.(+) & INT.(-)	EXT.(+) & INT.(-)
IN	IN	PSF	PSF	PSF
24	96	70	70	80
27		70	70	80
30		70	70	80
33		70	70	80
36		70	70	80
39		70	-	80
42		70	-	80
45		70	-	80
24	98	70	70	80
27		70	70	80
30		70	70	80
33		70	70	80
36		70	70	80
39		70	-	80
42		70	-	80
24	102	70	-	80
27		70	-	80
30		70	-	80
33		70	-	80
36		70	-	80
39		70	-	80
42		70	-	80
24	108	70	-	80
27		70	-	80
30		70	-	80
33		70	-	80
36		70	-	80
39		70	-	80
24	114	70	-	80
27		70	-	80
30		70	-	80
33		70	-	80
36		70	-	80
24	120	70	-	80
27		70	-	80
30		70	-	80
33		70	-	80
36		70	-	80

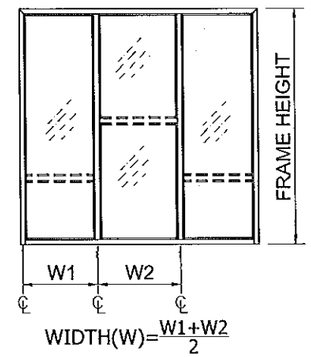

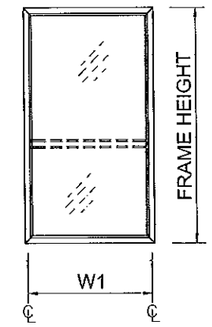

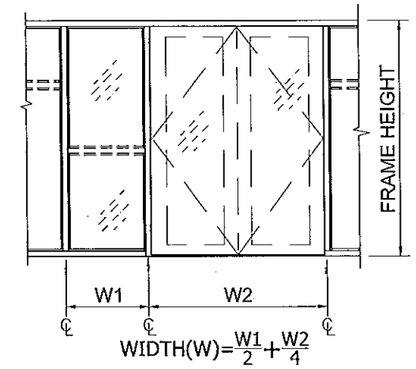

TYPICAL ANCHORS: SEE ELEV. FOR SPACING

TYPE `A': 1/4" TAPCON BY 'ITW' (Fu=120 KSI, Fy=192 KSI)
1/4" ULTRACON BY 'ELCO' (Fu=120 KSI, Fy=192 KSI)
INTO 2BY WOOD BUCKS OR WOOD STRUCTURES
1-1/2" MIN. EMBED INTO WOOD

TYPE `A1': 1/4" TAPCON BY 'ITW' (Fu=120 KSI, Fy=192 KSI)
1/4" ULTRACON BY 'ELCO' (Fu=120 KSI, Fy=192 KSI)
DIRECTLY INTO CONCRETE OR MASONRY
1-1/4" MIN. EMBEDMENT

TYPE `B': 5/16" TAPCON BY 'ITW' (Fu=120 KSI, Fy=192 KSI)
5/16" ULTRACON BY 'ELCO' (Fu=120 KSI, Fy=192 KSI)
INTO 2BY WOOD BUCKS OR WOOD STRUCTURES
1-1/2" MIN. EMBED INTO WOOD

TYPE `B1': 5/16" TAPCON BY 'ITW' (Fu=120 KSI, Fy=192 KSI)
5/16" ULTRACON BY 'ELCO' (Fu=120 KSI, Fy=192 KSI)
DIRECTLY INTO CONCRETE (3 KSI MIN) OR MASONRY
1-1/4" MIN. EMBEDMENT

TYPE `C': 1/4" SMS OR SELF DRILLING SCREWS (Fu=92 KSI, Fy=120 KSI)
INTO METAL STRUCTURES
STEEL : 1/8" THK. (12 GA.) MIN. (Fy = 36 KSI MIN.)
ALUMINUM : 1/8" THK. MIN. (6063-T5 MIN.)
(STEEL IN CONTACT WITH ALUMINUM TO BE PLATED OR PAINTED)

TYPICAL EDGE DISTANCE
INTO CONCRETE = 2-1/2" MIN.
INTO METAL STRUCTURE = 3/4" MIN.
INTO WOOD STRUCTURE = 1 1/4" MIN.
C-90 HOLLOW/FILLED BLOCK AT JAMB fm'=2 KSI
CONCRETE AT HEAD, SILL OR JAMB fc'=3 KSI

SEALANTS:

ALL FRAME CORNERS AND MULLION SEAMS SEALED WITH SILICONE.

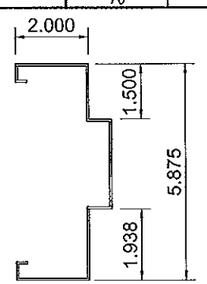

JAMB

Ix = 3.8211 in^4
Sx = 1.2911 in^3

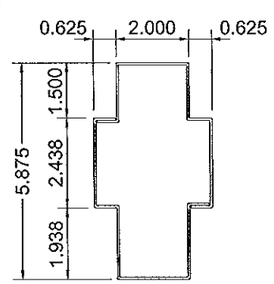

UNREINF. MULLION

Ix =3.001 in^4
Sx = 1.0636 in^3

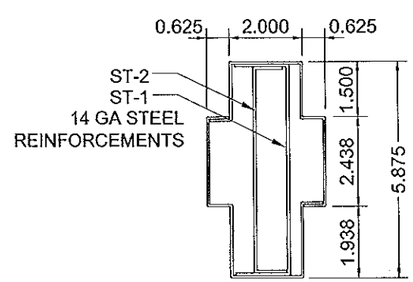

REINF. MULLION W/ ST-1 & ST-2

Ix = 7.508 in^4
Sx = 2.5953 in^3

Approved as complying with the Florida Building Code
Date Oct. 2, 2014
NOA# 14-0602.09
Miami Dade Product Control
By Manuel Perez

YIPING WANG, P.E.
FLORIDA REGISTRATION
PE #55983
C.A.N. 28677
STATE OF FLORIDA
PROFESSIONAL ENGINEER

REVISIONS		
NO.	DATE	DESCRIPTION

MCY ENGINEERING, INC.
GLAZING CONSULTANTS
8501 SW 124 AVE. STE. 205A
MIAMI, FL 33183
P: 305.271.0117
F: 786.573.5063
www.MCYEngineering.com
MCY.Engineering@Att.net

GENSTORM STEEL STOREFRONT SYSTEM - LMI & SMI

gensteel DOORS
www.gensteeldoors.com
4950 Hickmore, St. Laurent, Quebec, Canada, H4T1K6
Tel: (514) 733-3562 Fax: (514) 733-1932

DATE	09/18/2014
SCALE	AS NOTED
DRAWN	T.G.
PROJECT	MCY 14-014

DRAWING NO.
AD14-01

SEP 26 2014

DOOR JAMB MULLION LOAD CAPACITY - PSF				
NOMINAL DIMS.				LOADS -PSF
FRAME HEIGHT IN	DOOR HEIGHT IN	WIDTH (W2) IN	WIDTH (W1) IN	EXT.(+) INT.(-)
108	84	72	18	70
			24	70
			30	70
			36	70
		84	18	70
			24	70
			30	70
			36	70
		96	18	70
			24	70
			30	70
			36	67
114	84	72	18	70
			24	70
			30	70
			36	70
		84	18	70
			24	70
			30	70
			36	67
		96	18	70
			24	70
			30	66
			36	62
120	84	72	18	70
			24	70
			30	70
			36	70
		84	18	70
			24	69
			30	65
			36	61
		96	18	66
			24	62

DOOR JAMB MULLION LOAD CAPACITY - PSF				
NOMINAL DIMS.				LOADS -PSF
FRAME HEIGHT IN	DOOR HEIGHT IN	WIDTH (W2) IN	WIDTH (W1) IN	EXT.(+) INT.(-)
108	90	72	18	70
			24	70
			30	70
			36	70
		84	18	70
			24	70
			30	70
			36	70
		96	18	70
			24	70
			30	70
			36	68
114	90	72	18	70
			24	70
			30	70
			36	70
		84	18	70
			24	70
			30	70
			36	69
		96	18	70
			24	70
			30	68
			36	63
120	90	72	18	70
			24	70
			30	70
			36	70
		84	18	70
			24	70
			30	68
			36	64
		96	18	70
			24	66

DOOR JAMB MULLION LOAD CAPACITY - PSF				
NOMINAL DIMS.				LOADS -PSF
FRAME HEIGHT IN	DOOR HEIGHT IN	WIDTH (W2) IN	WIDTH (W1) IN	EXT.(+) INT.(-)
108	96	72	18	70
			24	70
			30	70
			36	70
		84	18	70
			24	70
			30	70
			36	70
		96	18	70
			24	70
			30	70
			36	67
114	96	72	18	70
			24	70
			30	70
			36	70
		84	18	70
			24	70
			30	70
			36	70
		96	18	70
			24	70
			30	68
			36	65
120	96	72	18	70
			24	70
			30	70
			36	70
		84	18	70
			24	70
			30	70
			36	66
		96	18	70
			24	70

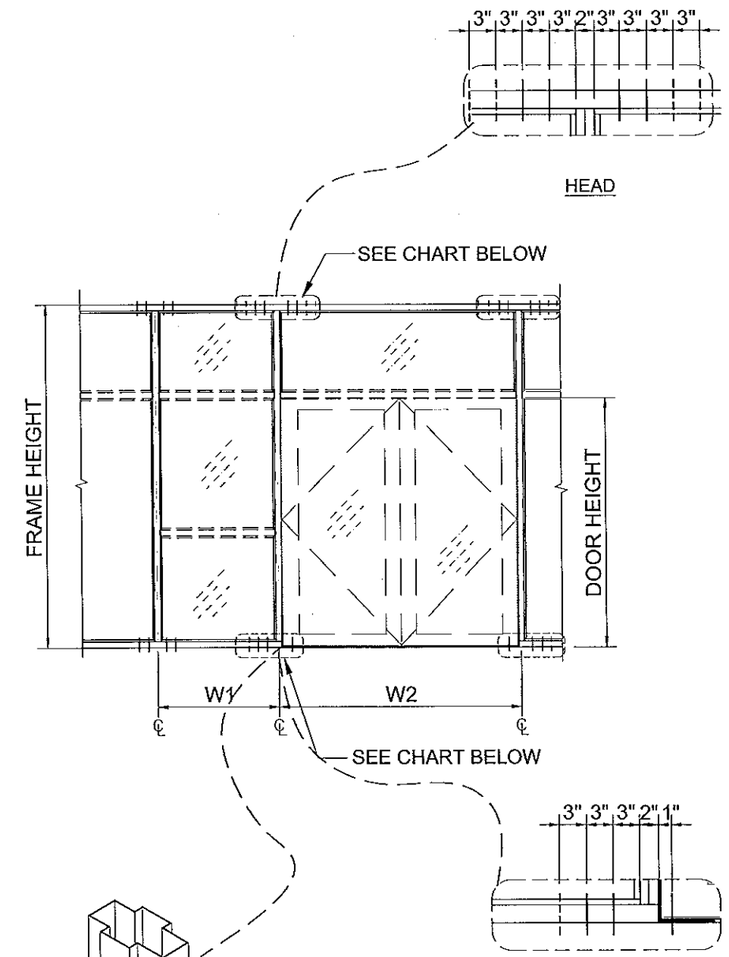

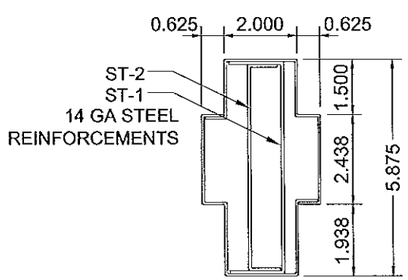

REINF. MULLION W/ ST-1 & ST-2

Ix = 7.508 in^4
Sx = 2.5953 in^3

ANCHOR TYPES	TOTAL NO. OF ANCHORS AT DOOR JAMB MULLION ENDS	
	HEAD	SILL
A	8	6
A1	6	4
B	6	4
B1	5	4
C	4	-

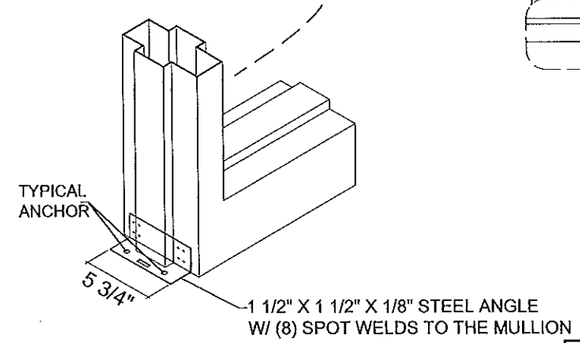

REVERSE FLOOR ANCHOR AT
HINGE STRIKE/MULLION

A

Approved as complying with the
Florida Building Code
Date Oct. 7, 2014
NOA# 14-0602.04
Miami Dade Product Control
By Manuel Grau

YIPING WANG, P.E.
FLORIDA REGISTRATION
PE #55983
C.A.N. 28677

SEP 26 2014

REVISIONS		
NO.	DATE	DESCRIPTION

MCY ENGINEERING, INC.
GLAZING CONSULTANTS
8501 SW 124 AVE. STE. 205A MIAMI, FL 33183
P: 305.271.0117
F: 786.573.5063
www.MCYEngineering.com
MCY.Engineering@Att.net

GENSTORM STEEL STOREFRONT SYSTEM - LMI & SMI

gensteel DOORS
www.gensteeldoors.com
4950 Hickmore, St. Laurent, Quebec, Canada, H4T1K6
Tel: (514) 733-3562 Fax: (514) 733-1932

DATE	09/18/2014
SCALE	AS NOTED
DRAWN	T.G.
PROJECT	MCY 14-014

DRAWING NO.
AD14-01

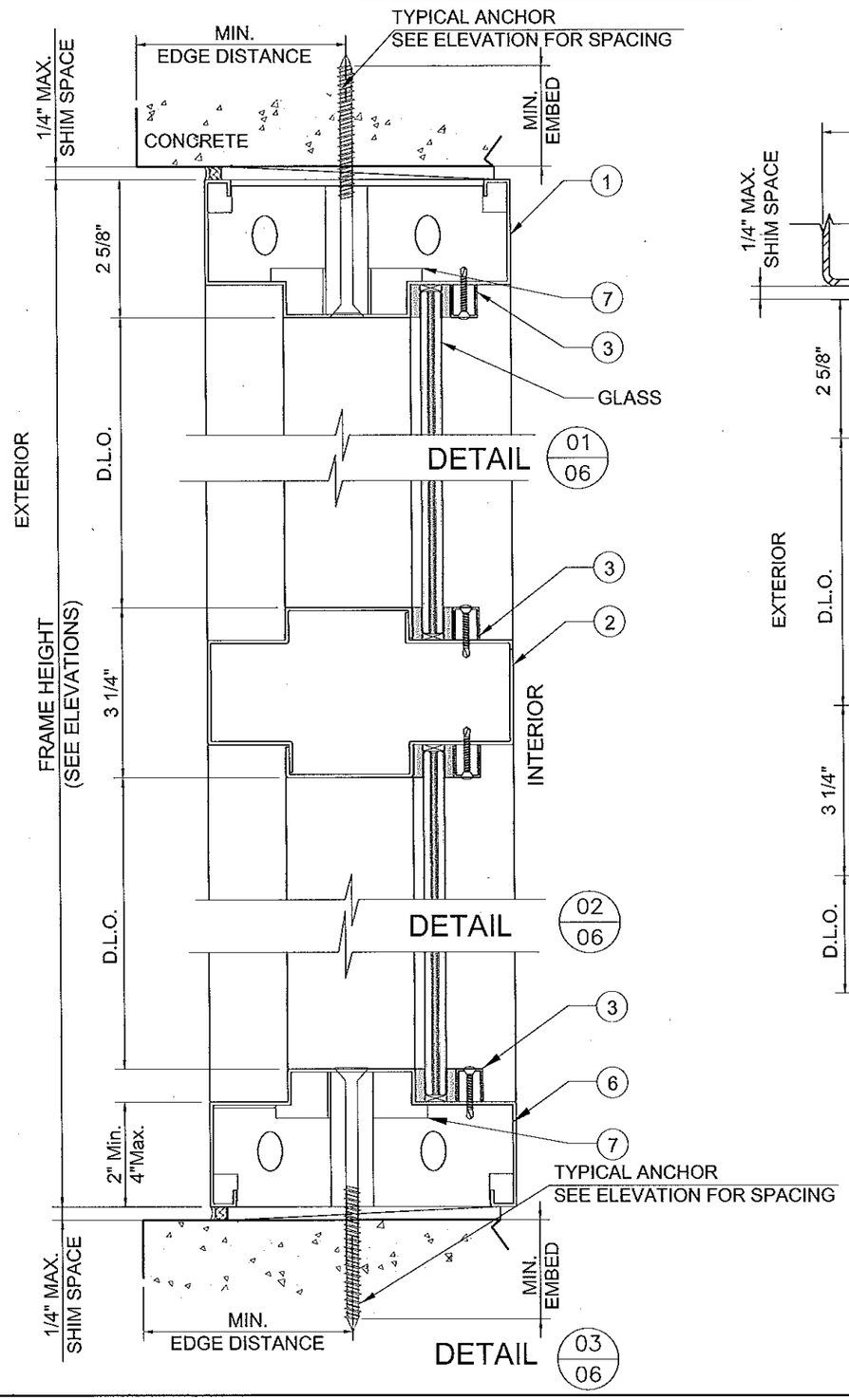

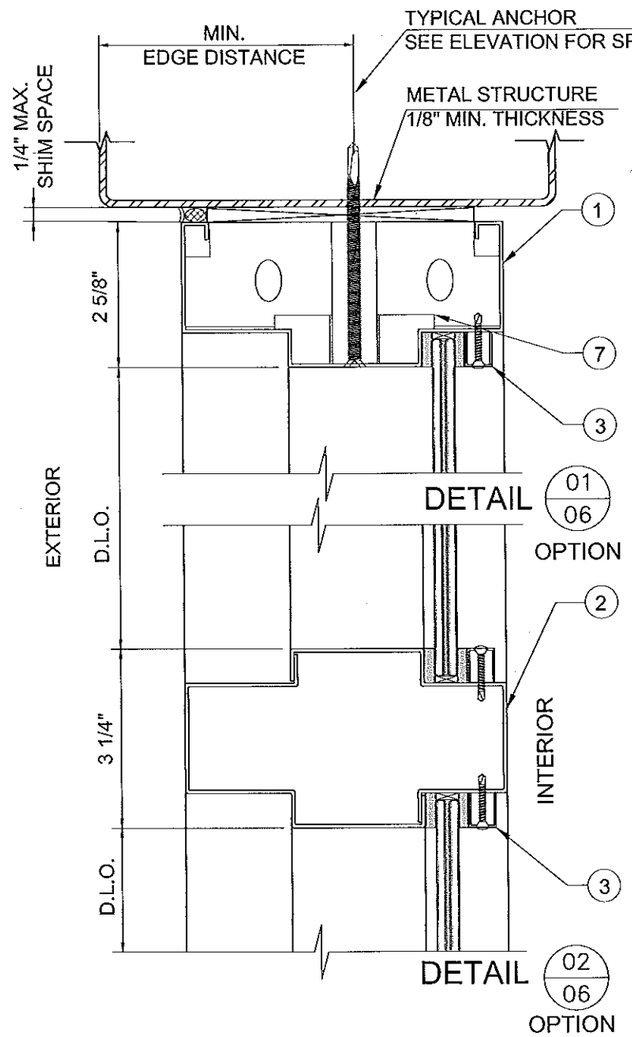

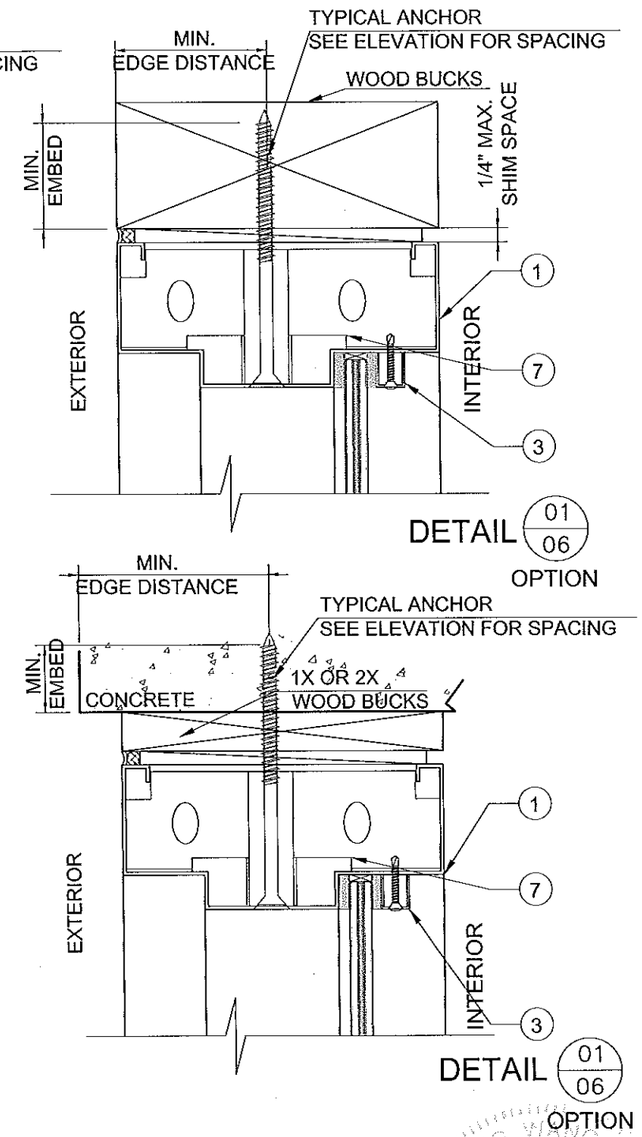

NOTE:
INSIDE GLAZING OPTION SHOWN.
EXTERIOR GLAZING IS AN OPTION,
FOR DETAIL SEE SHEET 3.

Approved as complying with the
Florida Building Code
Date Oct. 8 2014
NOA# 14-0602.07
Miami Dade Product Control
By Maxwell Fenz

YIPING WANG, P.E.
FLORIDA REGISTRATION
PE #55983
C.A.N. 28677
STATE OF FLORIDA PROFESSIONAL ENGINEER

REVISIONS		
NO.	DATE	DESCRIPTION

MCY ENGINEERING, INC.
GLAZING CONSULTANTS
8501 SW 124 AVE. STE. 205A P: 305.271.0117
MIAMI, FL. 33183 F: 786.573.5063
www.MCYEngineering.com MCY.Engineering@Att.net

GENSTORM STEEL STOREFRONT SYSTEM - LMI & SMI

gensteel doors
www.gensteeldoors.com
4950 Hickmore, St. Laurent, Quebec, Canada, H4T1K6
Tel: (514) 733-3562 Fax: (514) 733-1932

DATE	09/18/2014
SCALE	AS NOTED
DRAWN	T.G.
PROJECT	MCY 14-014

DRAWING NO.
AD14-01

6 OF 8

SEP 26 2014

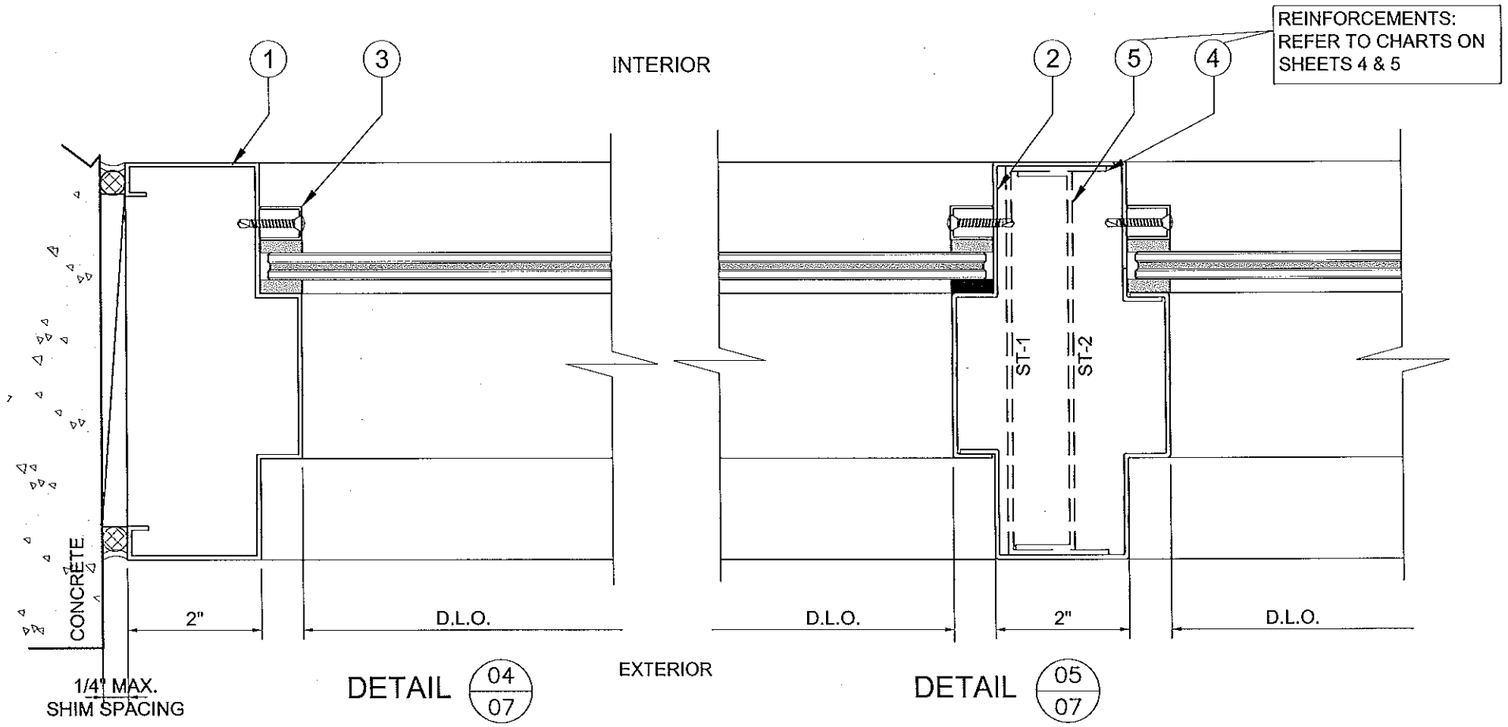

DETAIL 04/07

DETAIL 05/07

	GAP	
MAX.F.H.	MIN.	MAX.
78"	1/4"	1/2"
120"	3/8"	1/2"

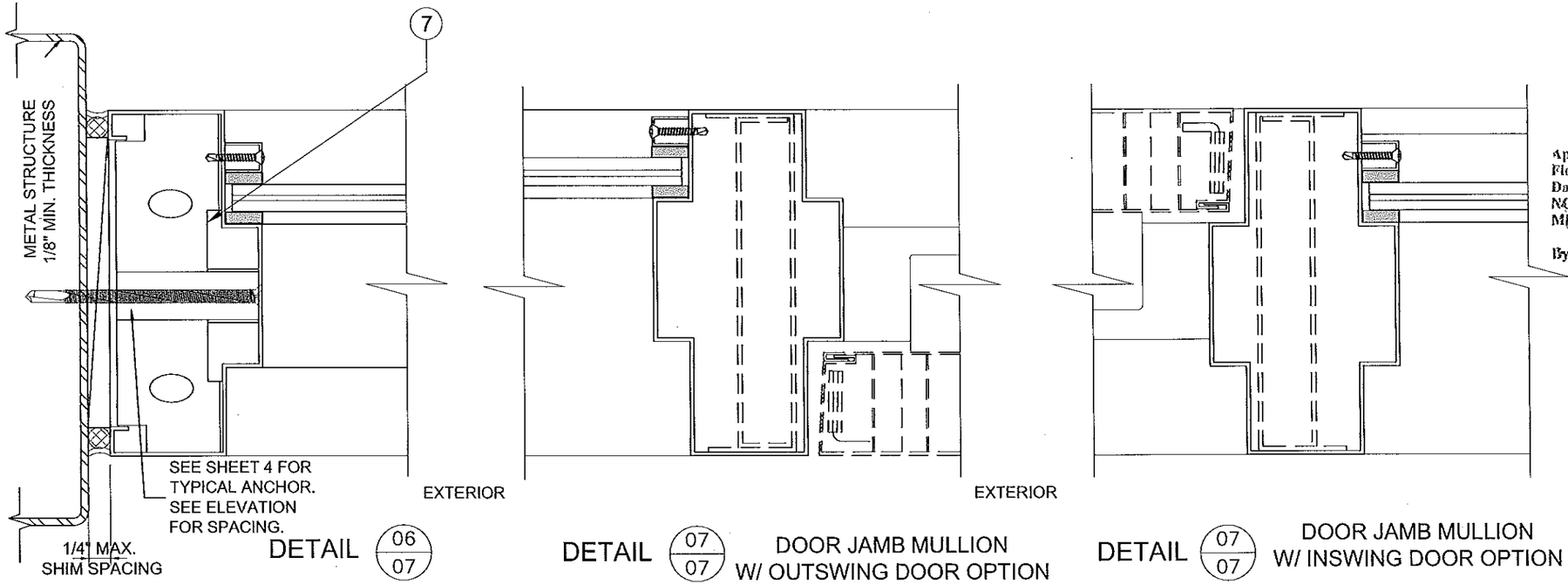

DETAIL 06/07

DETAIL 07/07 DOOR JAMB MULLION W/ OUTSWING DOOR OPTION

DETAIL 07/07 DOOR JAMB MULLION W/ INSWING DOOR OPTION

Approved as complying with the Florida Building Code
Date 9-2-2014
NOA# 14-06.02.07
Miami Dade Product Control
By Manuel Perez

YIPING WANG, P.E.
FLORIDA REGISTRATION
PE #55983
C.A.N. 28677
STATE OF FLORIDA
PROFESSIONAL ENGINEER

REVISIONS		
NO.	DATE	DESCRIPTION

MCY ENGINEERING, INC.
GLAZING CONSULTANTS
8501 SW 124 AVE. STE. 205A
MIAMI, FL 33183
P: 305.271.0117
F: 786.573.5063
www.MCYEngineering.com
MCY.Engineering@Att.net

GENSTORM STEEL STOREFRONT SYSTEM - LMI & SMI

gensteel doors
www.gensteeldoors.com
4950 Hickmore, St. Laurent, Quebec, Canada, H4T1K6
Tel: (514) 733-3562 Fax: (514) 733-1932

DATE	09/18/2014
SCALE	AS NOTED
DRAWN	T.G.
PROJECT	MCY 14-014

DRAWING NO.
AD14-01

SEP 26 2014

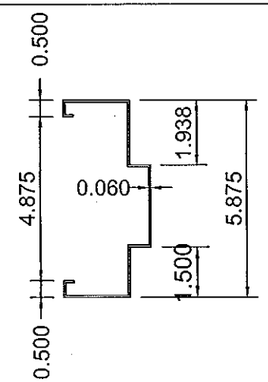

1 FRAME HEAD / JAMB
STEEL 16GA

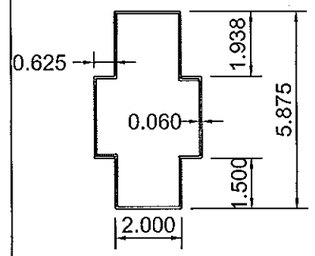

2 HORIZONTAL / VERTICAL MULLION
STEEL 16GA

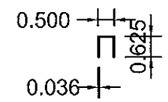

3 GLAZING STOP
STEEL 20GA

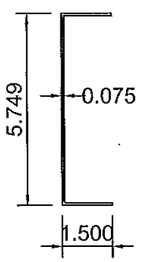

4 STEEL REINFORCEMENT (ST-1)
STEEL 14GA

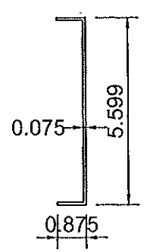

5 STEEL REINFORCEMENT (ST-2)
STEEL 14GA

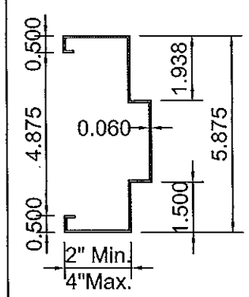

6 FRAME SILL
STEEL 16GA

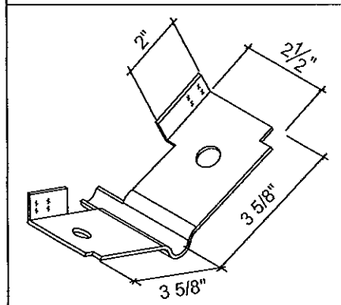

7 FA-3010 ANCHOR
STEEL 18GA

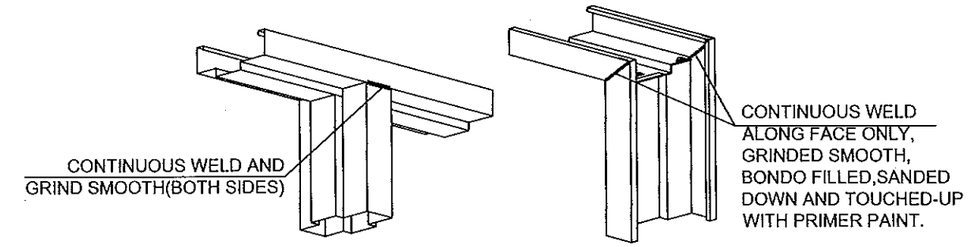

TOP FRAME CORNER CONNECTION DETAIL

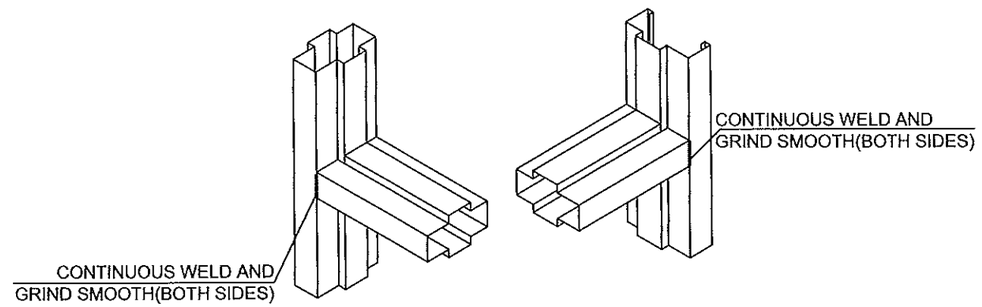

HORIZONTAL TO MULLION CONNECTION DETAIL

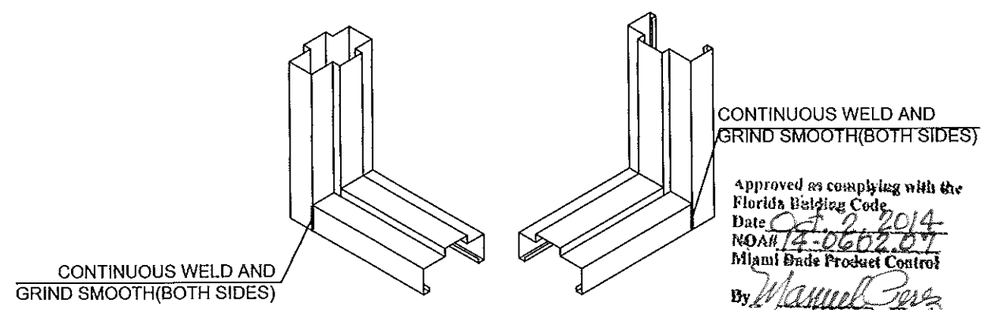

BOTTOM FRAME CORNER CONNECTION DETAIL

Approved as complying with the Florida Building Code
Date 9-2-2014
NOA# 14-0602.04
Miami Dade Product Control
By Manuel Perez

ITEM NO.	QUANTITY	DESCRIPTION	MATERIAL	MIN. YIELD STRESS	MANF./ SUPPLIER / REMARKS
1	AS REQD.	FRAME HEAD / JAMB	GALVANNEAL STEEL	40.8 KSI	GENSTEEL / ASTM A653 16 GA. COLD FORMED
2	AS REQD.	HORIZONTAL/VERTICAL MULLION	GALVANNEAL STEEL	40.8 KSI	GENSTEEL / ASTM A653 16 GA. COLD FORMED
3	AS REQD.	GLAZING STOP	GALVANNEAL STEEL	40.8 KSI	GENSTEEL / ASTM A653 20 GA. COLD FORMED
4	AS REQD.	ST-1 REINFORCEMENT	GALVANNEAL STEEL	40.8 KSI	GENSTEEL / ASTM A653 14 GA. COLD FORMED
5	AS REQD.	ST-2 REINFORCEMENT	GALVANNEAL STEEL	40.8 KSI	GENSTEEL / ASTM A653 14 GA. COLD FORMED
6	AS REQD.	FRAME SILL	GALVANNEAL STEEL	40.8 KSI	GENSTEEL / ASTM A653 16 GA. COLD FORMED
7	AS REQD.	FA-3010 ANCHOR	GALVANNEAL STEEL	40.8 KSI	GENSTEEL / ASTM A653 18 GA. COLD FORMED

YIPING WANG, P.E.
FLORIDA REGISTRATION
PE #55983
C.A.N. 28677
STATE OF FLORIDA
PROFESSIONAL ENGINEER

SEP 26 2014

REVISIONS		
NO.	DATE	DESCRIPTION

MCY ENGINEERING, INC.
GLAZING CONSULTANTS
8501 SW 124 AVE. STE. 205A
MIAMI, FL 33183
P: 305.271.0117
F: 786.573.5063
www.MCYEngineering.com
MCY.Engineering@Att.net

GENSTORM STEEL STOREFRONT SYSTEM - LMI & SMI

gensteel DOORS
www.gensteeldoors.com
4950 Hickmore, St. Laurent, Quebec, Canada, H4T1K6
Tel: (514) 733-3562 Fax: (514) 733-1932

DATE	09/18/2014
SCALE	AS NOTED
DRAWN	T.G.
PROJECT	MCY 14-014

DRAWING NO.
AD14-01