MIAMI-DADE COUNTY
PRODUCT CONTROL SECTION
11805 SW 26 Street, Room 208
Miami, Florida 33175-2474
T (786) 315-2590 F (786) 315-2599
www.miamidade.gov/economy

DEPARTMENT OF REGULATORY AND ECONOMIC RESOURCES (RER)
BOARD AND CODE ADMINISTRATION DIVISION

NOTICE OF ACCEPTANCE (NOA)

Firestone Building Products Company, LLC (IN)
250 West 96 Street
Indianapolis, IN 46260

SCOPE:

This NOA is being issued under the applicable rules and regulations governing the use of construction materials. The documentation submitted has been reviewed and accepted by Miami-Dade County RER-Product Control Section to be used in Miami Dade County and other areas where allowed by the Authority Having Jurisdiction (AHJ).

This NOA shall not be valid after the expiration date stated below. The Miami-Dade County Product Control Section (In Miami Dade County) and/or the AHJ (in areas other than Miami Dade County) reserve the right to have this product or material tested for quality assurance purposes. If this product or material fails to perform in the accepted manner, the manufacturer will incur the expense of such testing and the AHJ may immediately revoke, modify, or suspend the use of such product or material within their jurisdiction. RER reserves the right to revoke this acceptance, if it is determined by Miami-Dade County Product Control Section that this product or material fails to meet the requirements of the applicable building code.

This product is approved as described herein, and has been designed to comply with the Florida Building Code, including the High Velocity Hurricane Zone.

DESCRIPTION: Series 10 Aluminum Honeycomb Wall Panel System

APPROVAL DOCUMENT: Drawings No. **NPD2008-021**, titled "Series 10", sheets 1 through 23 of 23, dated 06/10/2014, prepared by Trinity ERD, signed and sealed by Robert Nieminen, P.E., bearing the Miami-Dade County Product Control revision stamp with the Notice of Acceptance number and expiration date by the Miami-Dade County Product Control Section.

MISSILE IMPACT RATING: Large and Small Missile Impact Resistant

LABELING: Each unit shall bear a permanent label with the manufacturer's name or logo, city, state and following statement: "Miami-Dade County Product Control Approved", unless otherwise noted herein.

RENEWAL of this NOA shall be considered after a renewal application has been filed and there has been no change in the applicable building code negatively affecting the performance of this product.

TERMINATION of this NOA will occur after the expiration date or if there has been a revision or change in the materials, use, and/or manufacture of the product or process. Misuse of this NOA as an endorsement of any product, for sales, advertising or any other purposes shall automatically terminate this NOA. Failure to comply with any section of this NOA shall be cause for termination and removal of NOA.

ADVERTISEMENT: The NOA number preceded by the words Miami-Dade County, Florida, and followed by the expiration date may be displayed in advertising literature. If any portion of the NOA is displayed, then it shall be done in its entirety.

INSPECTION: A copy of this entire NOA shall be provided to the user by the manufacturer or its distributors and shall be available for inspection at the job site at the request of the Building Official.

This NOA **renews and revises NOA # 09-0407.12** and consists of this page 1 and evidence page E-1, as well as approval document mentioned above.

The submitted documentation was reviewed by **Carlos M. Utrera, P.E.**

MIAMI-DADE COUNTY APPROVED

01/16/2015

NOA No. 14-0605.08
Expiration Date: June 10, 2019
Approval Date: January 29, 2015

NOTICE OF ACCEPTANCE: EVIDENCE SUBMITTED

A. DRAWINGS

1. Drawings No. **NPD2008-021**, titled "Series 10", sheets 1 through 23 of 23, dated 06/10/2014, prepared by Trinity ERD, signed and sealed by Robert Nieminen, P.E.

B. TESTS *"Submitted under NOA # 09-0407.12"*

1. Test reports on 1) Air Infiltration Test, per FBC, TAS 202-94
   2) Uniform Static Air Pressure Test, Loading per FBC TAS 202-94
   3) Water Resistance Test, per FBC, TAS 202-94
   4) Large Missile Impact Test per FBC, TAS 201-94
   5) Cyclic Wind Pressure Loading per FBC, TAS 203-94
   6) Tensile Test per ASTM E8-04

   along with marked-up drawings and installation diagram of Series 10 Aluminum Honeycomb Panel System, prepared by Architectural Testing, Inc., Test Report No. **77171.01-201-18**, dated 02/19/2009, signed and sealed by Joseph A. Reed, P.E.

C. CALCULATIONS

1. Anchorage calculation prepared by Trinity ERD, dated 11/07/2014, signed and sealed by Robert Nieminen, P.E.

   "Submitted under NOA # 09-0407.12"

2. Deflection, stress and anchorage calculations prepared by Rice Engineering, dated 03/18/2009, signed and sealed by L. David Rice, P.E.

D. QUALITY ASSURANCE

1. Miami-Dade Department of Regulatory and Economic Resources (RER)

E. MATERIAL CERTIFICATIONS

1. None.

F. STATEMENTS

1. Statement letter of code conformance with the FBC 5th edition (2014) and of no financial interest issued by Trinity ERD, dated 06/19/2014, signed and sealed by L. Robert Nieminen, P.E.
2. State of Minnesota certificate of merger effective on 12/22/2010.
3. State of Indiana certificate of organization effective on 08/08/2006.

01/16/2015

Carlos M. Utrera, P.E.
Product Control Examiner
NOA No. 14-0605.08
Expiration Date: June 10, 2019
Approval Date: January 29, 2015

SERIES 10
UNA-FAB PANEL

BILL OF MATERIALS

PANEL COMPOSITION

1. 1 1/2" Aluminum Honey Comb Panel
1a. (.040) Aluminum Skin Panels Qty. (2) per panel
1b. (1.42) Aluminum 1/4" Cell HoneyComb Core Qty. (1) per panel
1c. (.125) Aluminum Formed Angle
1d. (.040) Aluminum Formed "Z" Reinforcement
1e. Lord's Acrylic adhesive 406/19GB, Formed Angle Attachment to Panel

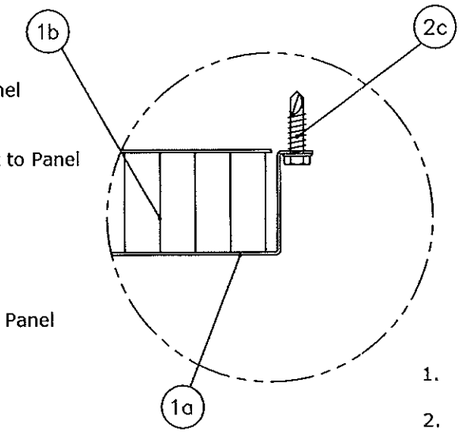

PANEL FASTENERS

2a. #10-16 x 1-1/2", Framing Fastener
2b. #1/4-14 x 1-1/2", Subgirt to Substrate
2c. #14-14 x 7/8"-No.10 HWH, Panel to Subgirt Fastener
2d. #10-16 x 1/2" S.S. Screw, "Z" Reinforcement Attachment to Panel

SUBGRIT

3. 14 Ga. (.075) Galv. 7/8" Deep, Hat Channels
3a. 8 Ga. (.164) Formed Galvanized, Subgrit
3b. 14 Ga. (.075) Formed Galvanized, Subgrit

ISOLATOR SHIMS & TAPE

4a. Standard glazing isolator shims as needed
4b. Dissimilar metals Separator Tape

SUBSTRATE

5a. 5/8" Gypsum board (Dens Glass)
5b. Valpro Shield underlayment
5c. Valpro Single sided perimeter / joint tape

STUD FRAMING

6a. 1-1/2" x 6" 16 Ga. Galv., Tracks
6b. 1-1/2" x 6" 16 Ga. Galv., Studs

FRAMING

7. 2" X 10" Yellow Pine

BACKER ROD

8. Rod, Ø5/8" Open cell neoprene

SEALANT

9. Dow corning #756 SMS building sealant, Horizontal and Vertical Joint Sealant

FLASINGS

10. (.040) Aluminum Perimeter flashing

TRINITY ERD
BUILDING SCIENCE RESEARCH | DESIGN | CONSULTATION

353 Christian Street, Unit #13
Oxford, CT 06478

TEL: 203 262 9245
FAX: 203 262 9243
WWW.TRINITYERD.COM

1. It shall be the responsibility of the structural engineer of record to verify the structural integrity of the structure to support the loads superimposed by the panels.
2. The panels have been designed and tested in accordance with the Florida Building Code and the Aluminum Design Manual. They are tested in accordance with Miami-Dade County protocol TAS 301. The laboratory tests and test reports are TAS201, TAS202, & TAS203.
3. All metal stud substrate shall be MIN. 16 Ga. Fy = 50 KSI.
4. All structural steel substrate shall be MIN. Fy = 36 KSI.
5. Panel Widths and Heights are limited as shown in elevations and details.
6. Separation of dissimilar materials must be maintained per section 2003.8.4 of the FBC.
7. This panel system has been tested, analyzed, and approved for design pressures not to exceed 120 PSF.
8. Clip spacing may not be altered. Each clip and fastener used must be installed as detailed on the drawings.
9. These panels have not been tested for wind driven rain test Florida Building Code, TAS-100 (A)-95.

PRODUCT REVISED
as complying with the Florida Building Code
Acceptance No 14-0605.08
Expiration Date 06/10/2019
By
Miami Dade Product Control

ROBERT NIEMINEN
LICENSE
No 59166
06/10/2014
STATE OF FLORIDA
PROFESSIONAL ENGINEER

NO.	DATE	BY	DESCRIPTION OF REVISIONS
5			
4			
3			
2			
1			

** NOTE TO INSTALLER **
These drawings represent Firestones' interpretation of the original architectural drawings. It is the responsibility of the installer to coordinate these drawings with the actual field conditions and dimensions as well as all other trade and provide Firestone with all panel face dimensions for fabrication. Please note that Firestone will not accept any responsibility for any delays or costs incurred due to changes made after the project has been released for fabrication. Firestone reserves the right to pursue compensation for costs incurred due to any changes made after the release for fabrication date.

Firestone BUILDING PRODUCTS
UNA-CLAD
1001 LUND BLVD. ANOKA, MINNESOTA 55303
NATIONWIDE 1-800-426-7737 LOCAL (763) 576-9595
Copyright © by Firestone Metal Products / UNA-CLAD

PROJECT NAME: MIAMI DADE BUILDING CODE
CUSTOMER NAME: FIRESTONE BUILDING PRODUCTS
PANEL DESCRIPTION: SERIES 10
DRAWING DESCRIPTION: COVER
DATE: 06.10.14
SCALE FACTOR: 1=1
DRAFTER: JWJ
DRAWING NUMBER: NPD2008-021001
PAGE NUMBER: 001

FAB. NUMBER: 14485

01 OF 23 PAGES

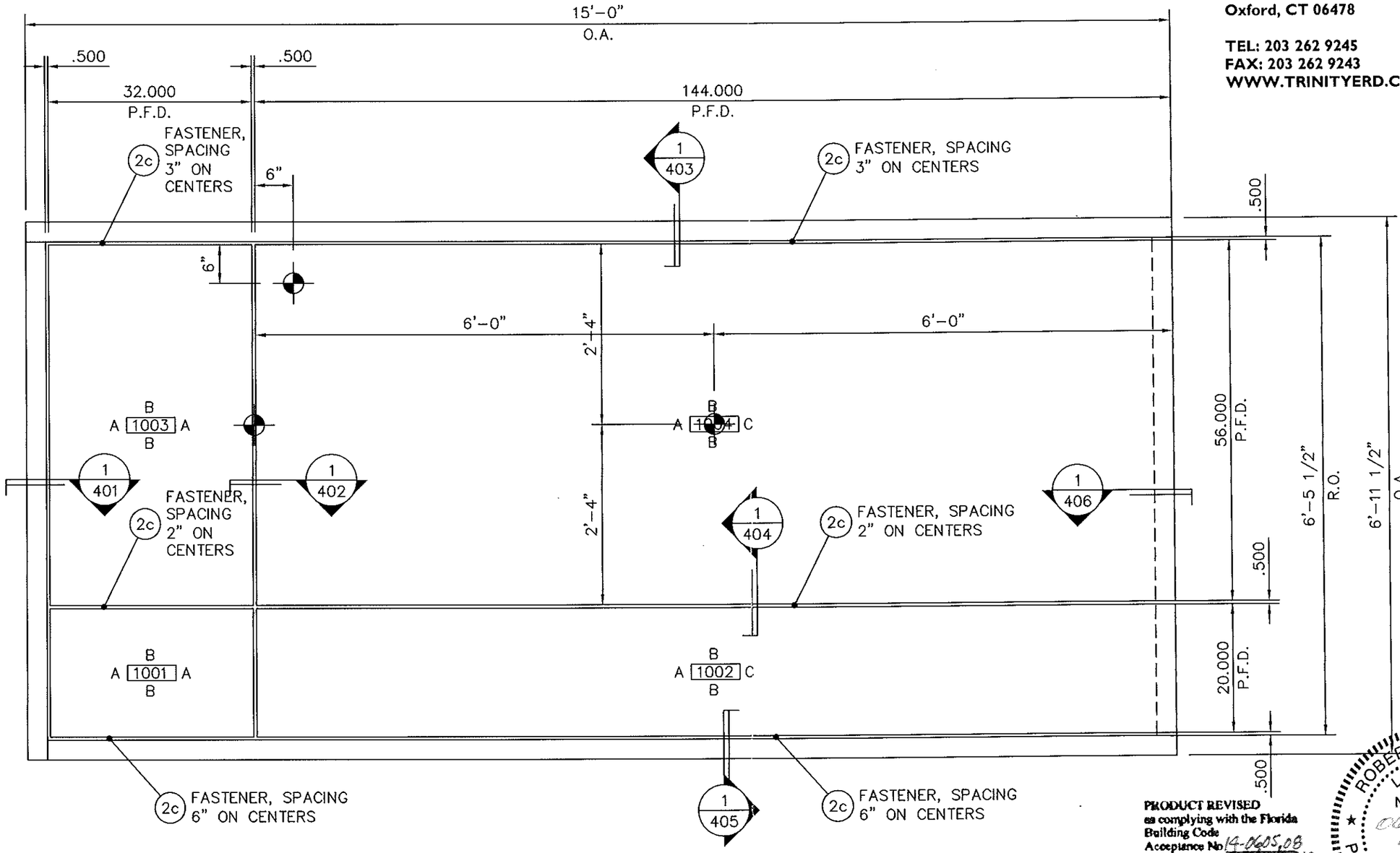

1/201 ELEVATION
SCALE: 3/4"=1'-0"

TRINITY ERD
BUILDING SCIENCE RESEARCH | DESIGN | CONSULTATION
353 Christian Street, Unit #13
Oxford, CT 06478
TEL: 203 262 9245
FAX: 203 262 9243
WWW.TRINITYERD.COM

NO.	DATE	BY	DESCRIPTION OF REVISIONS
A			
A			
A			
A			
A			

** NOTE TO INSTALLER **
These drawings represent Firestone's interpretation of the original architectural drawings. It is the responsibility of the installer to coordinate these drawings with the actual field conditions and dimensions as well as all other trade and provide Firestone with all panel face dimensions for fabrication. Please note that Firestone will not accept any responsibility for any delays or costs incurred due to changes made after the project has been released for fabrication. Please review these drawings prior to release for fabrication. Firestone will not accept any responsibility for any delays or costs incurred due to any changes made after the release for fabrication date.

Firestone BUILDING PRODUCTS
UNA-CLAD
1001 LUND BLVD. ANOKA, MINNESOTA 55303
NATIONWIDE 1-800-426-7737 LOCAL (763) 576-9595

Copyright © by Firestone Metal Products / UNA-CLAD

PRODUCT REVISED
as complying with the Florida Building Code
Acceptance No 14-0605.08
Expiration Date 06/10/2019
By _____
Miami Dade Product Control

ROBERT NIEMINEN
LICENSE
No 59166
06/10/2014
STATE OF FLORIDA
PROFESSIONAL ENGINEER

PROJECT NAME:	MIAMI DADE BUILDING CODE
CUSTOMER NAME:	FIRESTONE BUILDING PRODUCTS
PANEL DESCRIPTION:	SERIES 10
DRAWING DESCRIPTION:	ELEVATIONS
DATE:	06.10.14
SCALE FACTOR:	1=16
DRAFTER:	JWJ
DRAWING NUMBER:	NPD2008-021201
PAGE NUMBER:	201

02 OF 23 PAGES

FAB. NUMBER: 14485

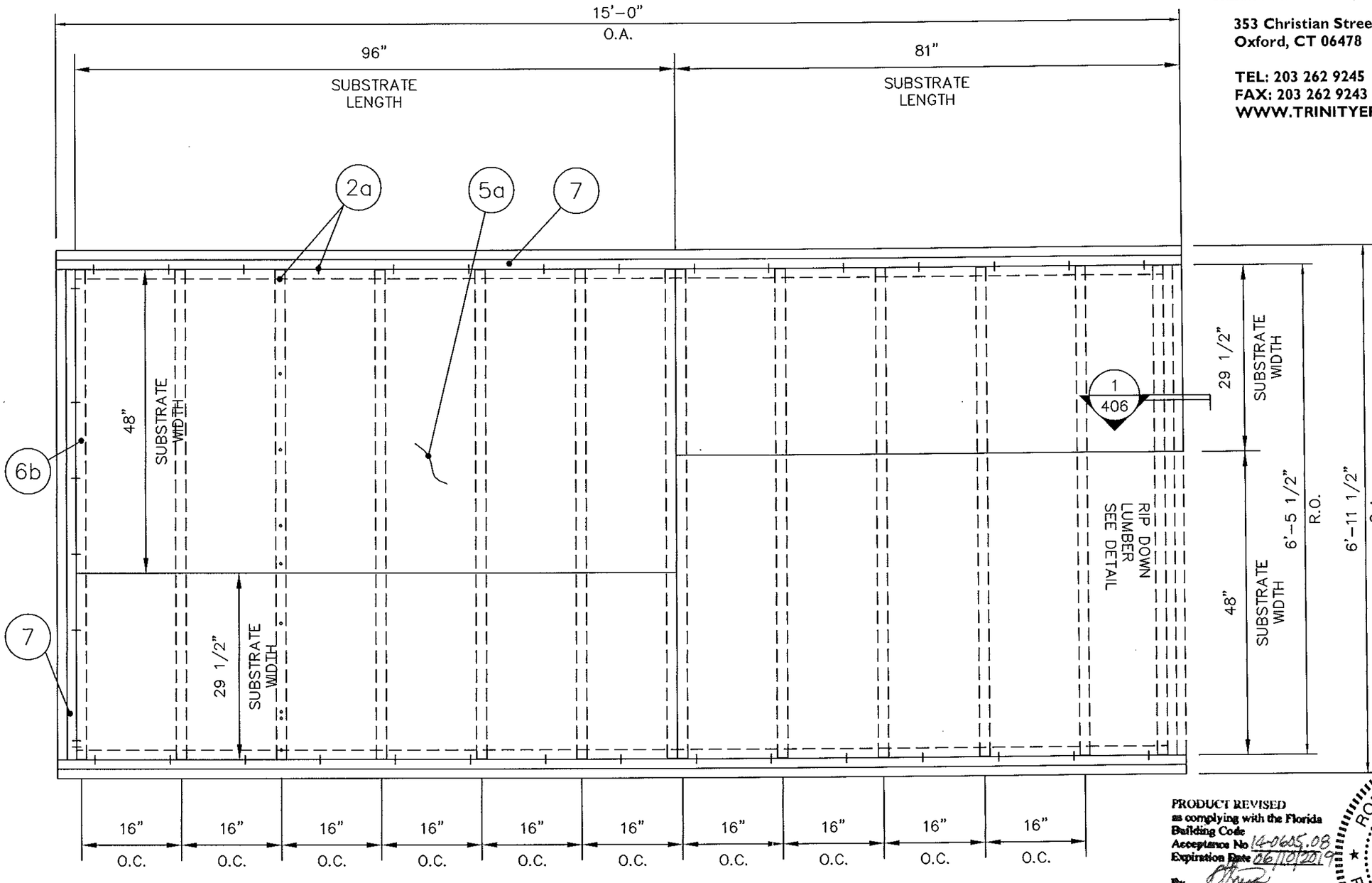

1 / 202 SUBSTRATE ELEVATION
SCALE: 3/4"=1'-0"

PRODUCT REVISED
as complying with the Florida Building Code
Acceptance No 14-0605.08
Expiration Date 06/10/2019
By
Miami Dade Product Control

ROBERT NIEMINEN
LICENSE
No 59166
06/10/2014
STATE OF FLORIDA
PROFESSIONAL ENGINEER

TRINITY ERD
BUILDING SCIENCE RESEARCH | DESIGN | CONSULTATION
353 Christian Street, Unit #13
Oxford, CT 06478
TEL: 203 262 9245
FAX: 203 262 9243
WWW.TRINITYERD.COM

NO.	DATE	BY	DESCRIPTION OF REVISIONS
5			
4			
3			
2			
1			

** NOTE TO INSTALLER **
These drawings represent Firestones' interpretation of the original architectural drawings. It is the responsibility of the installer to coordinate these drawings with the actual field conditions and dimensions as well as all other trade and provide Firestone with all panel face dimensions for fabrication. Please note that Firestone will not accept any responsibility for any delays or costs incurred due to changes made after the project has been released for fabrication. Firestone reserves the right to pursue compensation for costs incurred due to any changes made after the release for fabrication data.

Firestone BUILDING PRODUCTS
UNA-CLAD
1001 LUND BLVD. ANOKA, MINNESOTA 55303
NATIONWIDE 1-800-426-7737 LOCAL (763) 576-9595
Copyright © by Firestone Metal Products / UNA-CLAD

PROJECT NAME: MIAMI DADE BUILDING CODE
CUSTOMER NAME: FIRESTONE BUILDING PRODUCTS
PANEL DESCRIPTION: SERIES 10
DRAWING DESCRIPTION: ELEVATIONS

DATE: 06.10.14
SCALE FACTOR: 1=16
DRAFTER: JWJ
DRAWING NUMBER: NPD2008-021202
PAGE NUMBER: 202

03 OF 23 PAGES

FAB. NUMBER: 14485

TRINITY ERD
BUILDING SCIENCE RESEARCH | DESIGN | CONSULTATION

353 Christian Street, Unit #13
Oxford, CT 06478

TEL: 203 262 9245
FAX: 203 262 9243
WWW.TRINITYERD.COM

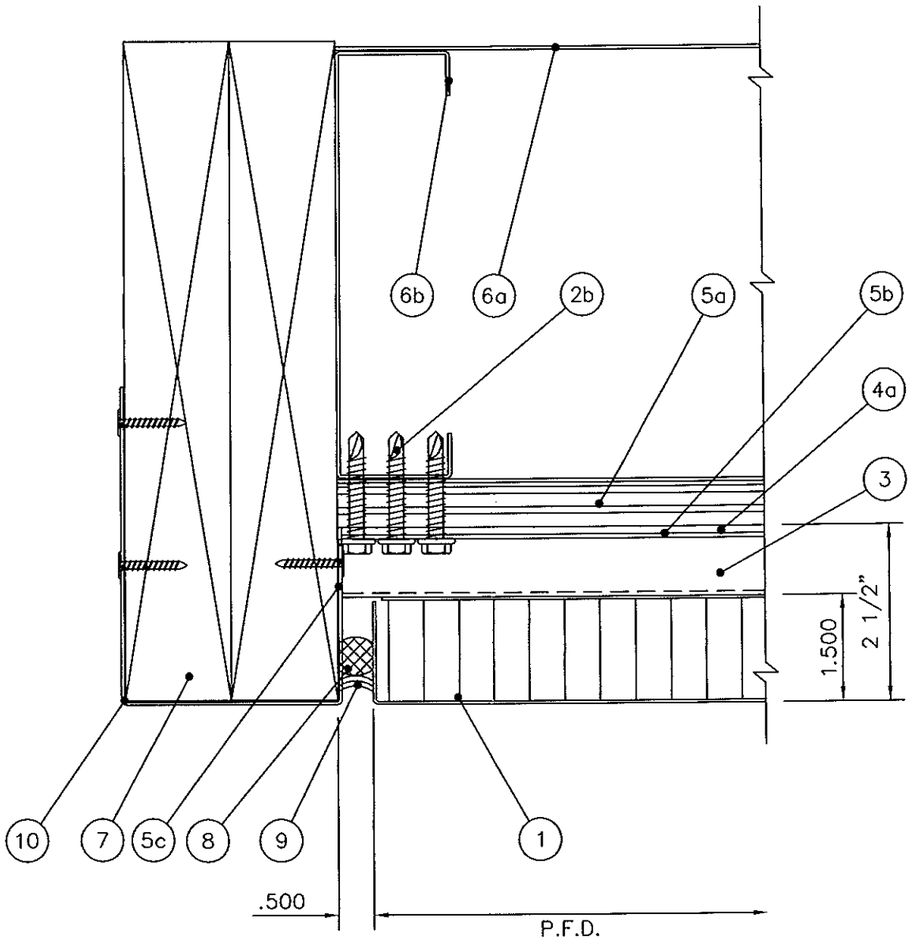

PRODUCT REVISED
as complying with the Florida Building Code
Acceptance No M-0605.08
Expiration Date 06/10/2019
By _____
Miami Dade Product Control

ROBERT NIEMINEN
LICENSE
No 59166
06/10/2014
STATE OF
FLORIDA
PROFESSIONAL ENGINEER

1 / 401 PANEL TERMINATION DETAIL
SCALE: 6"=1'-0"

04 OF 23 PAGES

NO.	DATE	BY	DESCRIPTION OF REVISIONS
1			
2			
3			
4			
5			

** NOTE TO INSTALLER **
These drawings represent Firestone's interpretation of the original architectural drawings. It is the responsibility of the installer to coordinate these drawings with the actual field conditions and dimensions as well as all other trade and provide Firestone with all panel face dimensions for fabrication. Please note that Firestone will not accept any responsibility for any delays or costs incurred due to changes made after the project has been released for fabrication. Firestone reserves the right to charge for any changes made after the release for fabrication date.

Firestone BUILDING PRODUCTS
UNA-CLAD
1001 LUND BLVD. ANOKA, MINNESOTA 55303
NATIONWIDE 1-800-426-7737 LOCAL (763) 576-9595
Copyright © by Firestone Metal Products / UNA-CLAD

PROJECT NAME:	MIAMI DADE BUILDING CODE
CUSTOMER NAME:	FIRESTONE BUILDING PRODUCTS
PANEL DESCRIPTION:	SERIES 10
DRAWING DESCRIPTION:	DETAILS
DATE:	06.10.14
SCALE FACTOR:	1=2
DRAFTER:	JWJ
DRAWING NUMBER:	NPD2008-021401
PAGE NUMBER:	401

FAB. NUMBER: 14485

TRINITY ERD
BUILDING SCIENCE RESEARCH | DESIGN | CONSULTATION

353 Christian Street, Unit #13
Oxford, CT 06478

TEL: 203 262 9245
FAX: 203 262 9243
WWW.TRINITYERD.COM

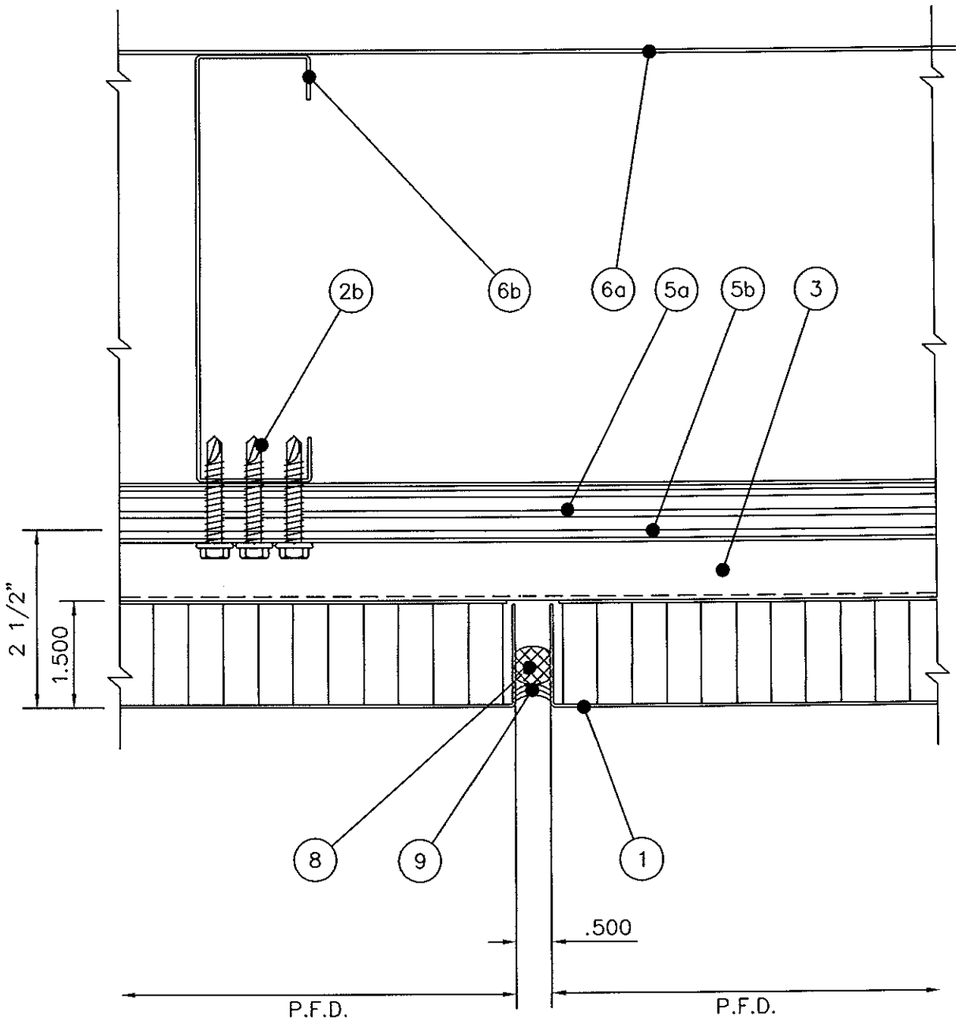

1/402 TYP. VERTICAL JOINT DETAIL
SCALE: 6"=1'-0"

PRODUCT REVISED
as complying with the Florida Building Code
Acceptance No 14-0605.08
Expiration Date 06/10/2019
By
Miami Dade Product Control

ROBERT NIEMINEN LICENSE No. 59166 06/10/2014 STATE OF FLORIDA PROFESSIONAL ENGINEER

NO.	DATE	BY	DESCRIPTION OF REVISIONS

** NOTE TO INSTALLER **
These drawings represent Firestone's interpretation of the original architectural drawings. It is the responsibility of the installer to coordinate these drawings with the actual field conditions and dimensions as well as all other trade and provide Firestone with all panel face dimensions for fabrication. Please note that Firestone will not accept any responsibility for any delays or costs incurred due to changes made after the project has been released for fabrication. Please review these drawings prior to release commencement for costs incurred due to any changes made after the release for fabrication date.

Firestone BUILDING PRODUCTS
UNA-CLAD
1001 LUND BLVD. ANOKA, MINNESOTA 55303
NATIONWIDE 1-800-426-7737 LOCAL (763) 576-9585
Copyright© by Firestone Metal Products / UNA-CLAD

PROJECT NAME:	MIAMI DADE BUILDING CODE
CUSTOMER NAME:	FIRESTONE BUILDING PRODUCTS
PANEL DESCRIPTION:	SERIES 10
DRAWING DESCRIPTION:	DETAILS
DATE:	06.10.14
SCALE FACTOR:	1=2
DRAFTER:	JWJ
DRAWING NUMBER:	NPD2008-021402
PAGE NUMBER:	402

FAB. NUMBER: 14485

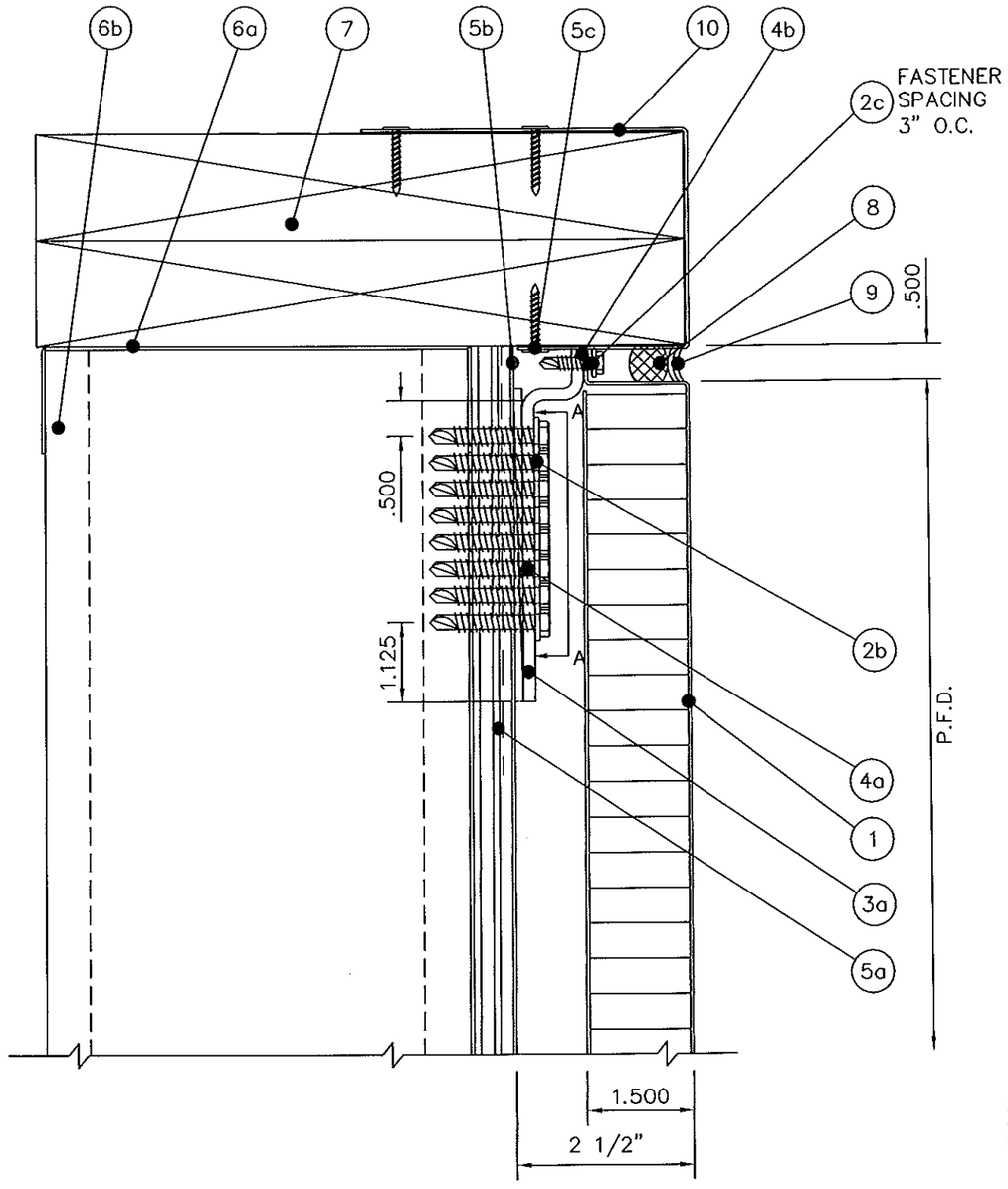

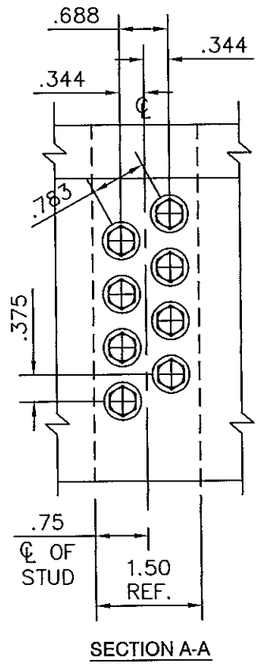

SECTION A-A

TRINITY ERD

BUILDING SCIENCE RESEARCH | DESIGN | CONSULTATION

353 Christian Street, Unit #13
Oxford, CT 06478

TEL: 203 262 9245
FAX: 203 262 9243
WWW.TRINITYERD.COM

NO.	DATE	BY	DESCRIPTION OF REVISIONS
A			
A			
A			
A			
A			

*** NOTE TO INSTALLER ***

These drawings represent Firestone's interpretation of the original architectural drawings. It is the responsibility of the installer to coordinate these drawings with the actual field conditions and dimensions as well as all other trade and provide Firestone with all panel face dimensions for fabrication. Please note that Firestone will not accept any responsibility for any delays or costs incurred due to changes made after the project has been released for fabrication. Firestone reserves the right to assess a charge to cover costs incurred due to any changes made after the release for fabrication date.

Firestone BUILDING PRODUCTS UNA-CLAD

1001 LUND BLVD. ANOKA, MINNESOTA 55303
NATIONWIDE 1-800-426-7737 LOCAL (763) 576-9595
Copyright© by Firestone Metal Products / UNA-CLAD

PRODUCT REVISED
as complying with the Florida
Building Code
Acceptance No 14060508
Expiration Date 06/10/2019
By
Miami Dade Product Control

ROBERT NIEMINEN
LICENSE
No 59166
6/13/2014
STATE OF
FLORIDA
PROFESSIONAL ENGINEER

PROJECT NAME:	MIAMI DADE BUILDING CODE
CUSTOMER NAME:	FIRESTONE BUILDING PRODUCTS
PANEL DESCRIPTION:	SERIES 10
DRAWING DESCRIPTION:	DETAILS
DATE:	06.10.14
SCALE FACTOR:	1=2
DRAFTER:	JWJ
DRAWING NUMBER:	NPD2008-021403
PAGE NUMBER:	403

FAB. NUMBER: 14485

1/403 PANEL TERMINATION DETAIL
SCALE: 6"=1'-0"

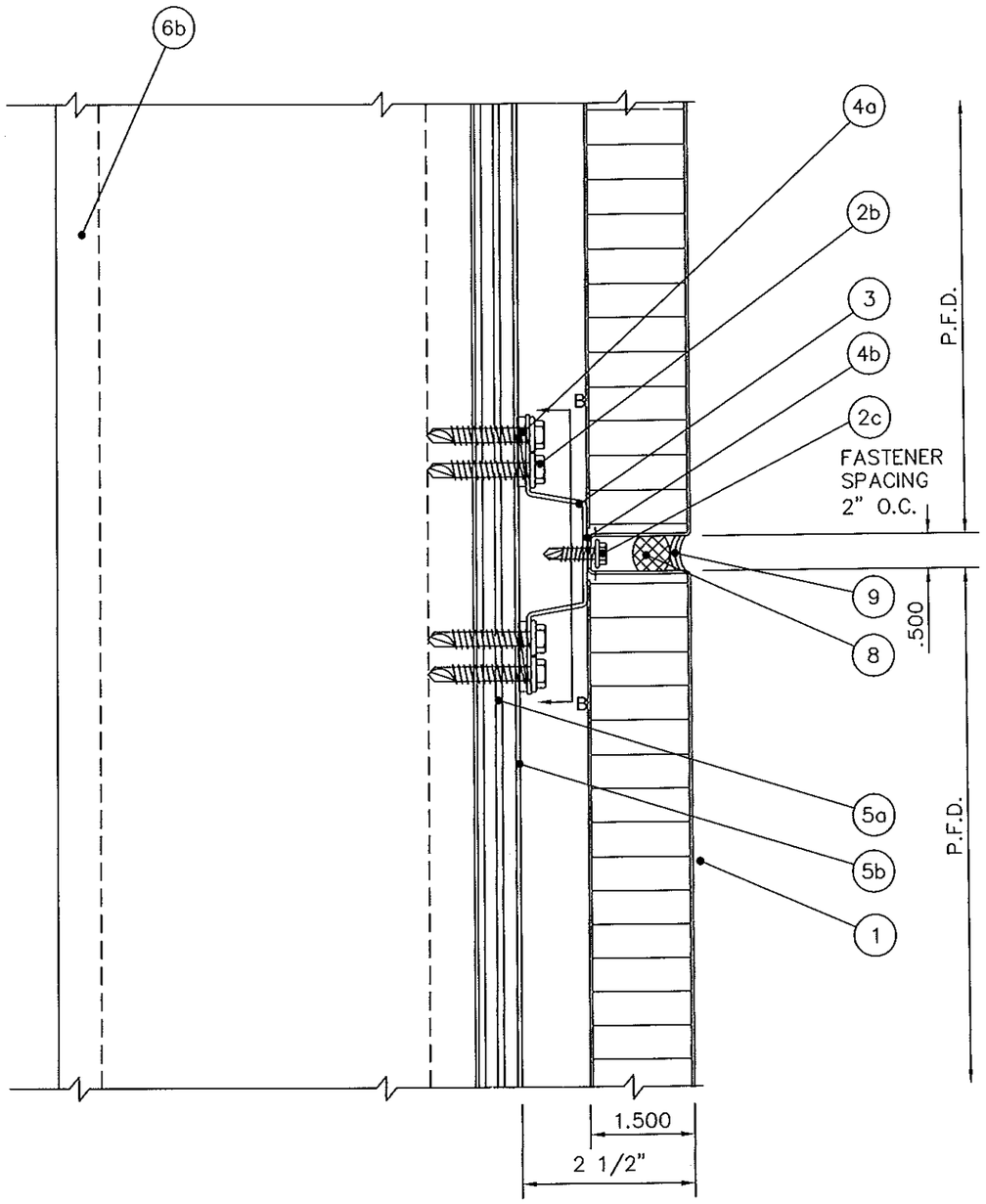

1 / 404 TYP. HORZ. DETAIL
SCALE: 6"=1'-0"

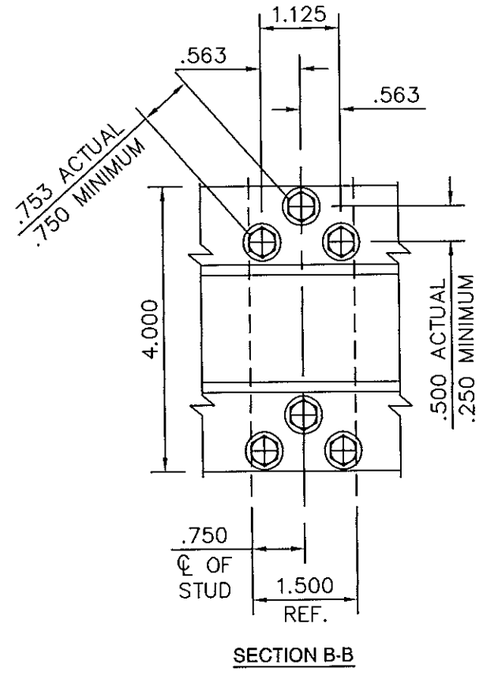

SECTION B-B

PRODUCT REVISED
as complying with the Florida
Building Code
Acceptance No 14-0605.08
Expiration Date 06/10/2019
By _____
Miami Dade Product Control

ROBERT NIEMINEN
LICENSE
No 59166
06/10/2014
STATE OF
FLORIDA
PROFESSIONAL ENGINEER

TRINITY ERD
BUILDING SCIENCE RESEARCH | DESIGN | CONSULTATION
353 Christian Street, Unit #13
Oxford, CT 06478
TEL: 203 262 9245
FAX: 203 262 9243
WWW.TRINITYERD.COM

NO.	DATE	BY	DESCRIPTION OF REVISIONS
1			
2			
3			
4			
5			
6			

** NOTE TO INSTALLER **
These drawings represent Firestone's interpretation of the original architectural drawings. It is the responsibility of the installer to coordinate these drawings with the actual field conditions and dimensions as well as all other trade and provide Firestone with all panel face dimensions for fabrication. Please note that Firestone will not accept any responsibility for any delays or costs incurred due to changes made after the project has been released for fabrication. Firestone reserves the right to assess charges for costs incurred due to any changes made after the release for fabrication data.

Firestone BUILDING PRODUCTS
UNA-CLAD
1001 LUND BLVD. ANOKA, MINNESOTA 55303
NATIONWIDE 1-800-426-7737 LOCAL (763) 576-9595

Copyright © by Firestone Metal Products / UNA-CLAD

PROJECT NAME:	MIAMI DADE BUILDING CODE
CUSTOMER NAME:	FIRESTONE BUILDING PRODUCTS
PANEL DESCRIPTION:	SERIES 10
DRAWING DESCRIPTION:	DETAILS
DATE:	06.10.14
SCALE FACTOR:	1=2
DRAFTER:	JWJ
DRAWING NUMBER:	NPD2008-021404
PAGE NUMBER:	404

07 OF 23 PAGES

FAB. NUMBER: 14485

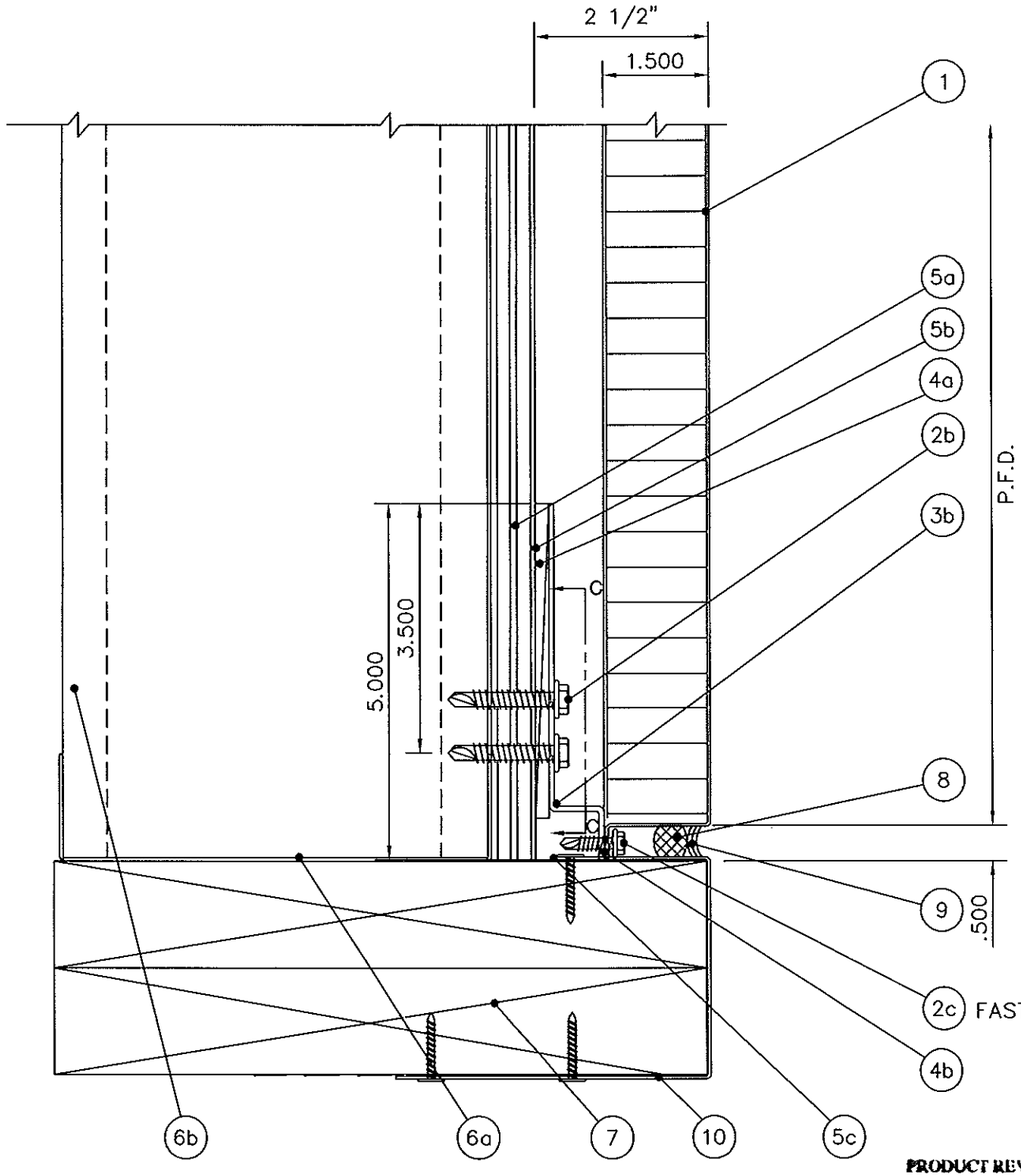

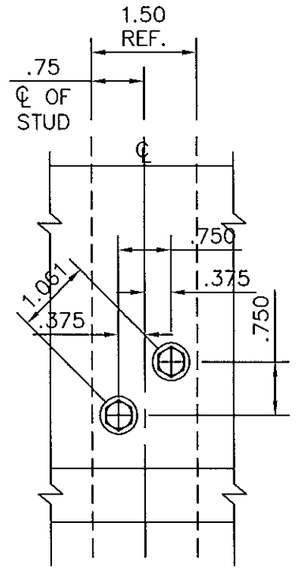

SECTION C-C

PRODUCT REVISED
complying with the Florida Building Code
Acceptance No 14-0605.08
Expiration Date 06/10/2019
By
Miami Dade Product Control

ROBERT NIEMINEN
LICENSE
No 59166
STATE OF
FLORIDA
PROFESSIONAL ENGINEER

1 / 405 BASE TERMINATION DETAIL
SCALE: 6"=1'-0"

08 OF 23 PAGES

TRINITY ERD
BUILDING SCIENCE RESEARCH | DESIGN | CONSULTATION
353 Christian Street, Unit #13
Oxford, CT 06478
TEL: 203 262 9245
FAX: 203 262 9243
WWW.TRINITYERD.COM

NO.	DATE	BY	DESCRIPTION OF REVISIONS
1			
2			
3			
4			
5			

*** NOTE TO INSTALLER ***
These drawings represent Firestone's interpretation of the original construction documents. It is the responsibility of the installer to coordinate these drawings with the actual field conditions and dimensions as well as all other trade and provide Firestone with all panel face dimensions for fabrication. Please note that Firestone will not accept any responsibility for any delays or costs incurred due to changes made after the project has been released for fabrication. Firestone reserves the right to pursue compensation for costs incurred due to any changes made after the release for fabrication date.

Firestone BUILDING PRODUCTS UNA-CLAD
1001 LUND BLVD. ANOKA, MINNESOTA 55303
NATIONWIDE 1-800-426-7737 LOCAL (763) 576-9595
Copyright © by Firestone Metal Products / UNA-CLAD

PROJECT NAME:	MIAMI DADE BUILDING CODE
CUSTOMER NAME:	FIRESTONE BUILDING PRODUCTS
PANEL DESCRIPTION:	SERIES 10
DRAWING DESCRIPTION:	DETAILS
DATE:	06.10.14
SCALE FACTOR:	1=2
DRAFTER:	JWJ
DRAWING NUMBER:	NPD2008-021405
PAGE NUMBER:	405

FAB. NUMBER: 14485

TRINITY ERD
BUILDING SCIENCE RESEARCH | DESIGN | CONSULTATION

353 Christian Street, Unit #13
Oxford, CT 06478

TEL: 203 262 9245
FAX: 203 262 9243
WWW.TRINITYERD.COM

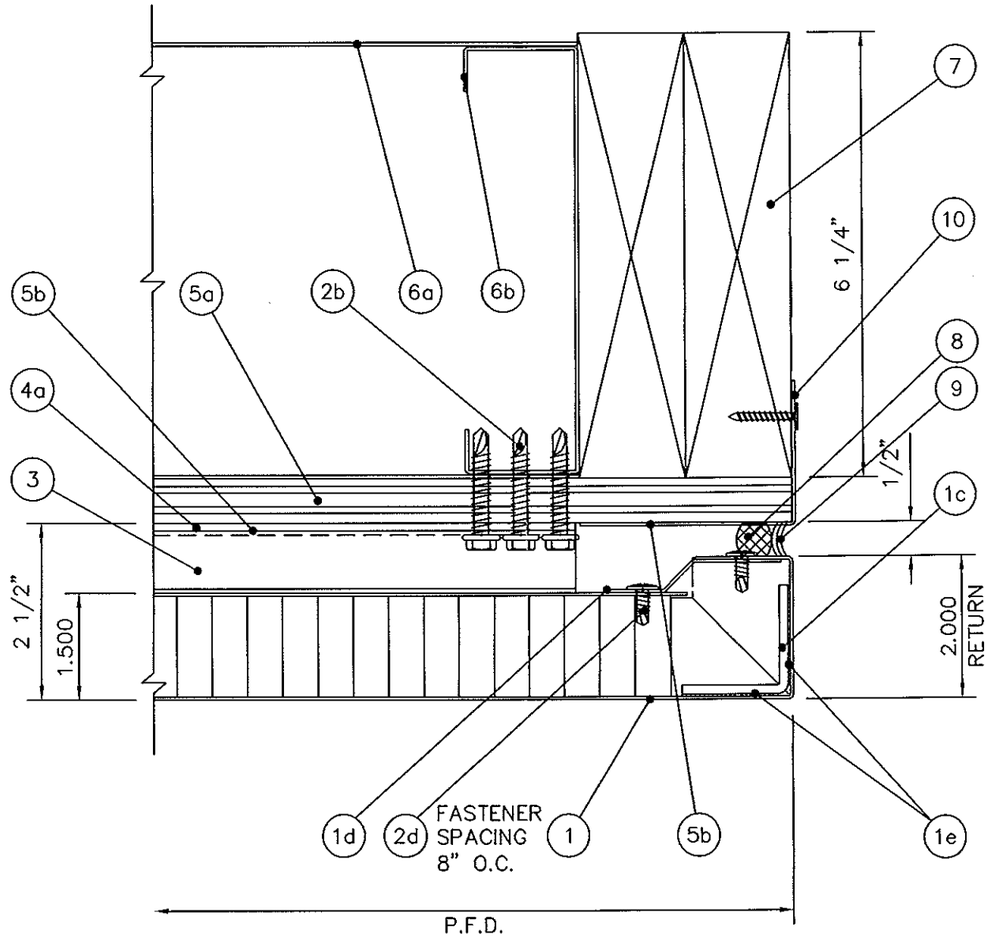

1 / 406 OUTSIDE CORNER DETAIL
SCALE:6"=1'-0"

NO.	DATE	BY	DESCRIPTION OF REVISIONS

** NOTE TO INSTALLER **
These drawings represent Firestone's interpretation of the original architectural drawings. It is the responsibility of the installer to coordinate these drawings with the actual field conditions and dimensions as well as all other trade and provide Firestone with all panel face dimensions for fabrication. Please note that Firestone will not accept any responsibility for any delays or costs incurred due to changes made after the project has been released for fabrication. Firestone reserves the right to assess compensation for costs incurred due to any changes made after the release for fabrication date.

Firestone BUILDING PRODUCTS
UNA-CLAD
1001 LUND BLVD. ANOKA, MINNESOTA 55303
NATIONWIDE 1-800-426-7737 LOCAL (763) 576-9595
Copyright © by Firestone Metal Products / UNA-CLAD

PRODUCT REVISED
as complying with the Florida Building Code
Acceptance No 14-0605.08
Expiration Date 06.10.2019
By
Miami Dade Product Control

ROBERT NIEMINEN LICENSE No 59166 06/10/2014 STATE OF FLORIDA PROFESSIONAL ENGINEER

PRODUCT NAME:	MIAMI DADE BUILDING CODE
CUSTOMER NAME:	FIRESTONE BUILDING PRODUCTS
PANEL DESCRIPTION:	SERIES 10
DRAWING DESCRIPTION:	DETAILS
DATE:	06.10.14
SCALE FACTOR:	1=2
DRAFTER:	JWJ
DRAWING NUMBER:	NPD2008-021406
PAGE NUMBER:	406

FAB. NUMBER: 14485

09 OF 23 PAGES

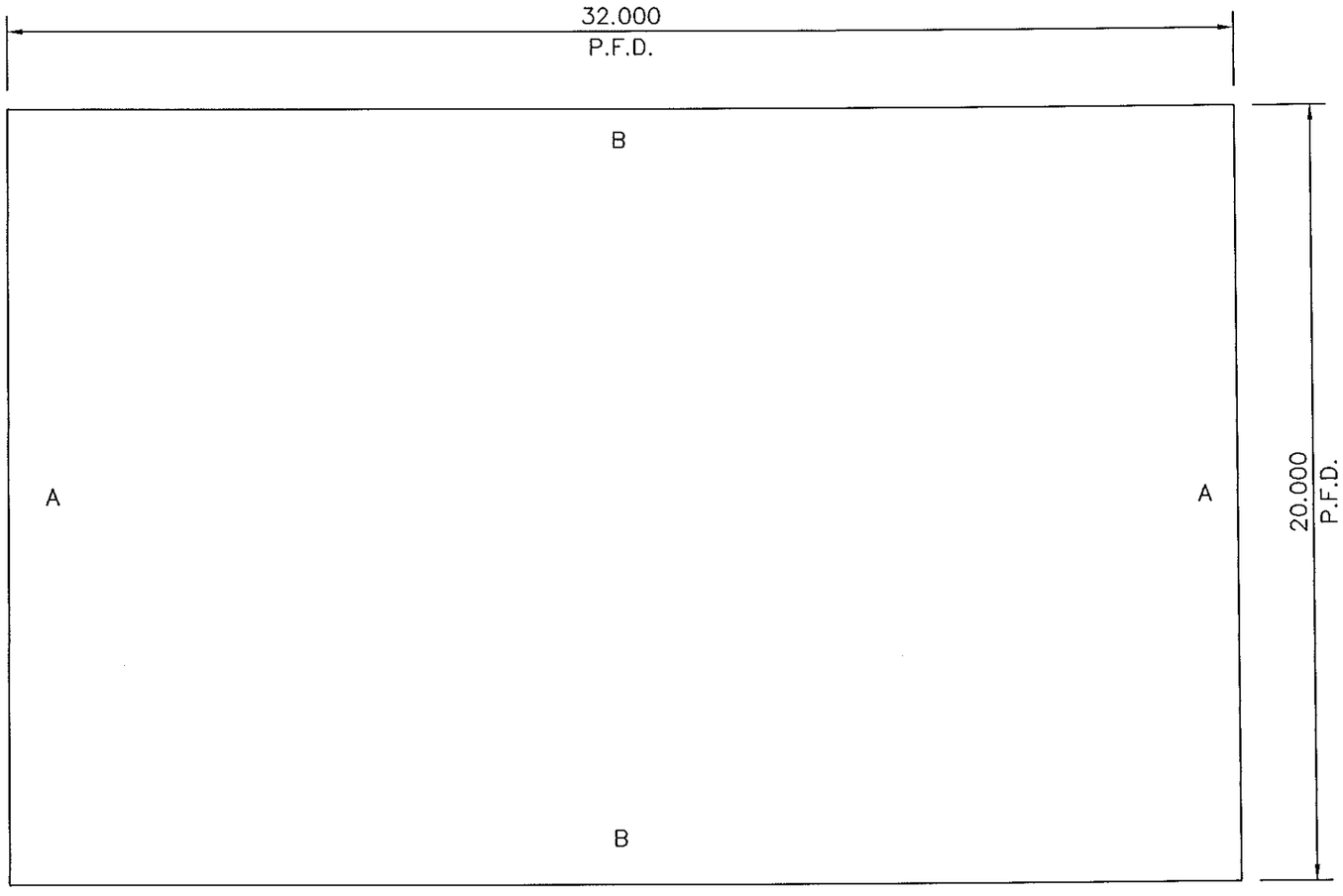

FACE = + 1.844
CORE = 0.92 Aluminum
BACKER = + −0.125

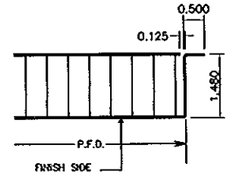

TOP

DETAIL B

FACE = + 1.844
CORE = 0.92 Aluminum
BACKER = + −0.125

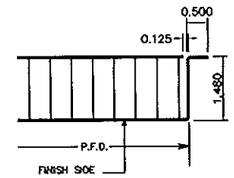

BOTTOM

DETAIL B

FACE = + 1.372
CORE = 0.92 Aluminum
BACKER = + −0.125

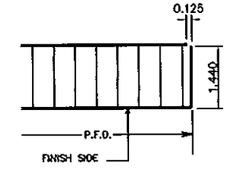

LEFT

DETAIL A

FACE = + 1.372
CORE = 0.92 Aluminum
BACKER = + −0.125

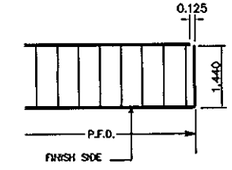

RIGHT

DETAIL A

TRINITY ERD
BUILDING SCIENCE RESEARCH | DESIGN | CONSULTATION
353 Christian Street, Unit #13
Oxford, CT 06478
TEL: 203 262 9245
FAX: 203 262 9243
WWW.TRINITYERD.COM

PRODUCT REVISED
as complying with the Florida Building Code
Acceptance No 14-0605.08
Expiration Date 06/10/2019
By
Miami Dade Product Control

ROBERT NIEMINEN
LICENSE
No 59166
06/10/2014
STATE OF FLORIDA
PROFESSIONAL ENGINEER

FINISH SIDE UP
1001
GRAIN DIRECTION

Firestone BUILDING PRODUCTS
UNA-CLAD
NATIONWIDE 1-800-426-7737 LOCAL (763) 576-9595
Copyright © by Firestone Metal Products / UNA-CLAD

PANEL DESCRIPTION SERIES 10

PANEL NUMBER	QTY.	WIDTH	LENGTH
1001	1	20.000	32.000

PFD = PANEL FACE DIMENSION

CUSTOMER: FIRESTONE BUILDING PRODUCTS		DRAWN BY: JWJ
FAB NUMBER: 14485	RELEASE: 1	SCALE: 1=4
MATERIAL: Aluminum		DATE: 06.10.14
THICKNESS: 0.040	DRAWING NO. NPD2008-021 REL1 PN1001.dwg	
FINISH: FSMP	PRE: ☒ POST: ☐	PAGE NO. 1 of 4

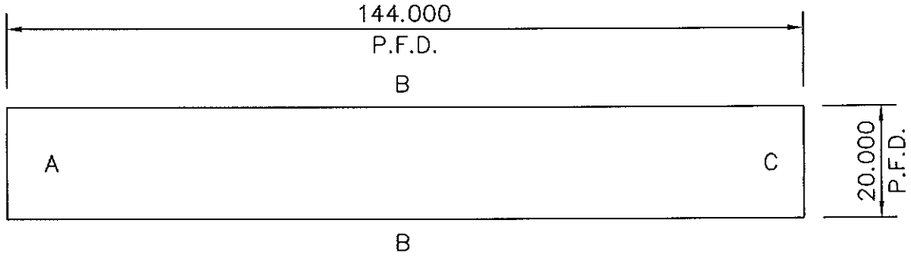

FACE = + 1.844
CORE = 0.92 Aluminum
BACKER = + −0.125

TOP

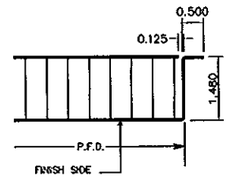

DETAIL B

FACE = + 1.844
CORE = 0.92 Aluminum
BACKER = + −0.125

BOTTOM

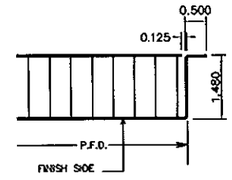

DETAIL B

FACE = + 1.372
CORE = 0.92 Aluminum
BACKER = + −0.125

LEFT

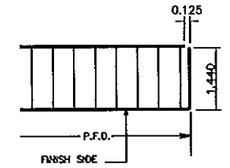

DETAIL A

FACE = + 3.239
CORE = 0.92 Aluminum
BACKER = + −1.500

RIGHT

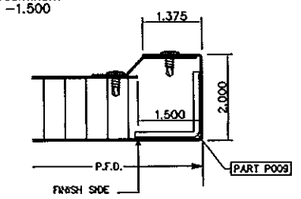

DETAIL C

FINISH SIDE UP

1002

GRAIN DIRECTION

TRINITY ERD
BUILDING SCIENCE RESEARCH | DESIGN | CONSULTATION
353 Christian Street, Unit #13
Oxford, CT 06478
TEL: 203 262 9245
FAX: 203 262 9243
WWW.TRINITYERD.COM

PRODUCT REVISED
as complying with the Florida
Building Code
Acceptance No 14485.08
Expiration Date 06/10/2019
By _____
Miami Dade Product Control

ROBERT NIEMINEN
LICENSE
No 59166
06/10/2014
STATE OF FLORIDA
PROFESSIONAL ENGINEER

Firestone
BUILDING PRODUCTS
UNA-CLAD
NATIONWIDE 1-800-426-7737 LOCAL (763) 576-9595
Copyright © by Firestone Metal Products / UNA-CLAD

PANEL DESCRIPTION SERIES 10

PANEL NUMBER	QTY.	WIDTH	LENGTH
1002	1	20.000	144.000

PFD = PANEL FACE DIMENSION

CUSTOMER: FIRESTONE BUILDING PRODUCTS		DRAWN BY: JWJ
FAB NUMBER: 14485	RELEASE: 1	SCALE: 1=28
MATERIAL: Aluminum		DATE: 06.10.14
THICKNESS: 0.040	DRAWING NO. NPD2008-021 REL1 PN1002.dwg	
FINISH: FSMP	PRE: ☒ POST: ☐	PAGE NO. 2 of 4

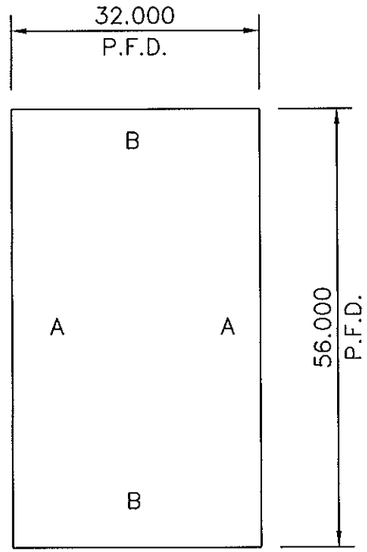

FACE = + 1.844
CORE = 0.92 Aluminum
BACKER = + −0.125

TOP

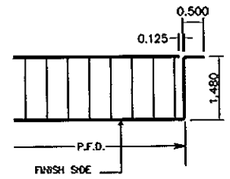

DETAIL B

FACE = + 1.844
CORE = 0.92 Aluminum
BACKER = + −0.125

BOTTOM

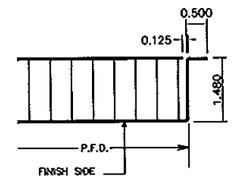

DETAIL B

FACE = + 1.372
CORE = 0.92 Aluminum
BACKER = + −0.125

LEFT

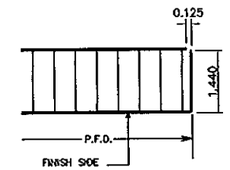

DETAIL A

FACE = + 1.372
CORE = 0.92 Aluminum
BACKER = + −0.125

RIGHT

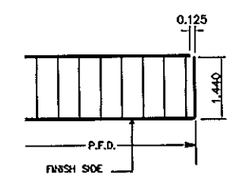

DETAIL A

TRINITY ERD
BUILDING SCIENCE RESEARCH | DESIGN | CONSULTATION
353 Christian Street, Unit #13
Oxford, CT 06478
TEL: 203 262 9245
FAX: 203 262 9243
WWW.TRINITYERD.COM

PRODUCT REVISED
as complying with the Florida Building Code
Acceptance No 14-0605.08
Expiration Date 06/10/2019
By
Miami Dade Product Control

ROBERT NIEMINEN
LICENSE
No 59166
06/10/2014
STATE OF FLORIDA
PROFESSIONAL ENGINEER

FINISH SIDE UP
1003
GRAIN DIRECTION

Firestone BUILDING PRODUCTS
UNA-CLAD
NATIONWIDE 1-800-426-7737 LOCAL (763) 576-9595
Copyright © by Firestone Metal Products / UNA-CLAD

PANEL DESCRIPTION SERIES 10

PANEL NUMBER	QTY.	WIDTH	LENGTH
1003	1	56.000	32.000

PFD = PANEL FACE DIMENSION

CUSTOMER: FIRESTONE BUILDING PRODUCTS		DRAWN BY: JWJ
FAB NUMBER: 14485	RELEASE: 1	SCALE: 1=20
MATERIAL: Aluminum		DATE: 06.10.14
THICKNESS: 0.040	DRAWING NO. NPD2008-021 REL1 PN1003.dwg	
FINISH: FSMP	PRE: ☒ POST: ☐	PAGE NO. 3 of 4

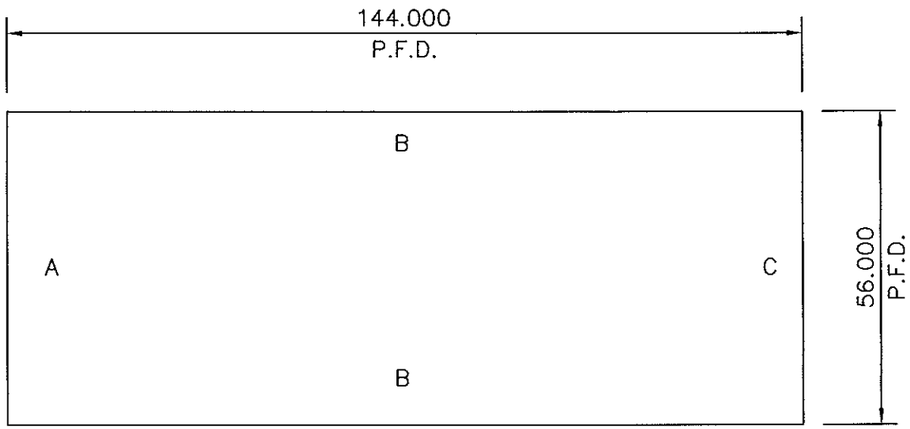

FACE = + 1.844
CORE = 0.92 Aluminum
BACKER = + −0.125

TOP

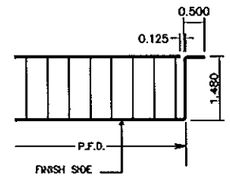

DETAIL B

FACE = + 1.844
CORE = 0.92 Aluminum
BACKER = + −0.125

BOTTOM

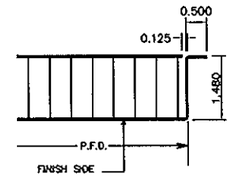

DETAIL B

FACE = + 1.372
CORE = 0.92 Aluminum
BACKER = + −0.125

LEFT

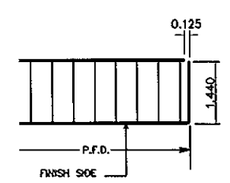

DETAIL A

FACE = + 3.239
CORE = 0.92 Aluminum
BACKER = + −1.500

RIGHT

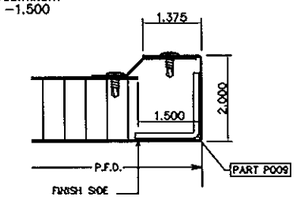

DETAIL C

TRINITY ERD
BUILDING SCIENCE RESEARCH | DESIGN | CONSULTATION

353 Christian Street, Unit #13
Oxford, CT 06478

TEL: 203 262 9245
FAX: 203 262 9243
WWW.TRINITYERD.COM

PRODUCT REVISED
as complying with the Florida Building Code
Acceptance No 14-0605.09
Expiration Date 06/10/2019
By
Miami Dade Product Control

ROBERT NIEMINEN
LICENSE
No 59166
06/10/2014
STATE OF FLORIDA
PROFESSIONAL ENGINEER

FINISH SIDE UP
1004
GRAIN DIRECTION

13 OF 23 PAGES

Firestone
BUILDING PRODUCTS
UNA-CLAD

NATIONWIDE 1-800-426-7737 LOCAL (763) 576-9595
Copyright © by Firestone Metal Products / UNA-CLAD

PANEL DESCRIPTION SERIES 10

PANEL NUMBER	QTY.	WIDTH	LENGTH
1004	1	56.000	144.000

PFD = PANEL FACE DIMENSION

CUSTOMER: FIRESTONE BUILDING PRODUCTS		DRAWN BY: JWJ
FAB NUMBER: 14485	RELEASE: 1	SCALE: 1=28
MATERIAL: Aluminum		DATE: 06.10.14
THICKNESS: 0.040	DRAWING NO. NPD2008-021 REL1 PN1004.dwg	
FINISH: FSMP	PRE: ☒ POST: ☐	PAGE NO. 4 of 4

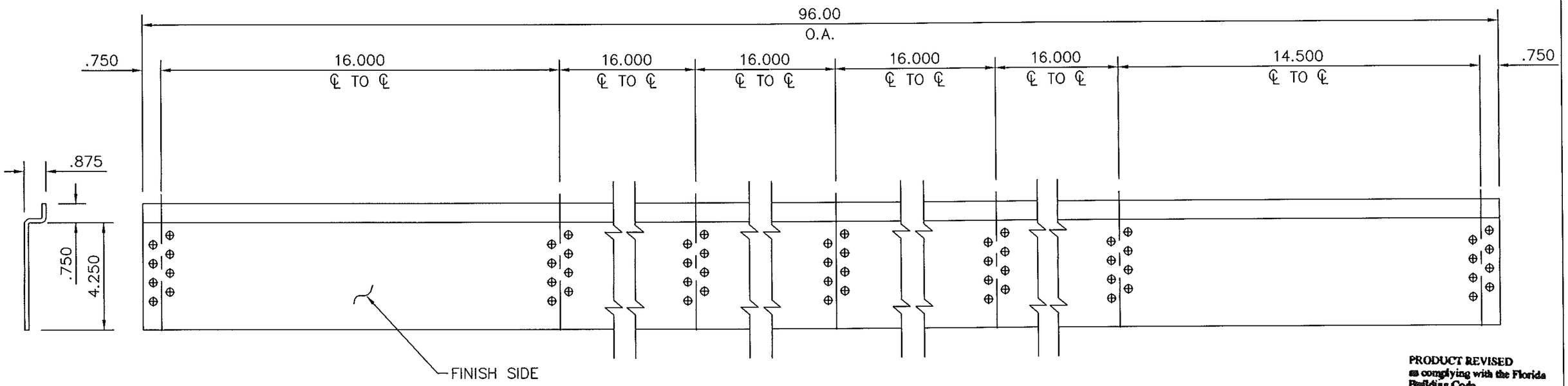

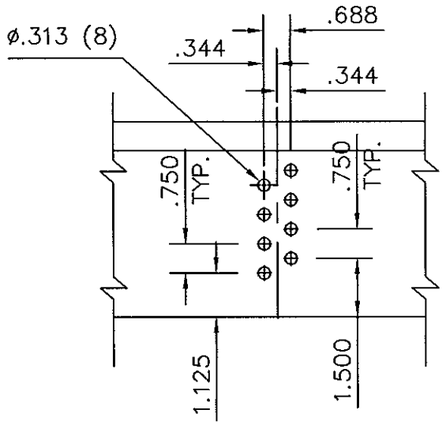

DESCRIPTION	"Z" SUBGRIT			
PART #	QTY.	LENGTH	FIELD APPLIED	SHOP APPLIED
P001	4	96.00		X

PRODUCT REVISED
as complying with the Florida
Building Code
Acceptance No 14-0605.08
Expiration Date 06/10/2019
By
Miami Dade Product Control

TRINITY ERD
BUILDING SCIENCE RESEARCH | DESIGN | CONSULTATION
353 Christian Street, Unit #13
Oxford, CT 06478
TEL: 203 262 9245
FAX: 203 262 9243
WWW.TRINITYERD.COM

ROBERT NIEMINEN
LICENSE
No 59166
06/10/2014
STATE OF
FLORIDA
PROFESSIONAL ENGINEER

Firestone
BUILDING PRODUCTS
UNA-CLAD
NATIONWIDE 1-800-426-7737 LOCAL (763) 576-9595
Copyright © by Firestone Metal Products / UNA-CLAD

PANEL DESCRIPTION Series 10

PANEL NUMBER	QTY.	WIDTH	LENGTH

PFD = PANEL FACE DIMENSION

CUSTOMER: FIRESTONE BUILDING PRODUCTS		DRAWN BY: JWJ
FAB NUMBER: 14485	RELEASE: 1	SCALE: 1=4
MATERIAL: GALV. STEEL		DATE: 06.10.14
THICKNESS: 8 Ga. (0.164)	DRAWING NO. NPD2008-021 Rel1 P001.dwg	
FINISH: MILL FINISH	PRE: ☐ POST ☐	PAGE NO. P1

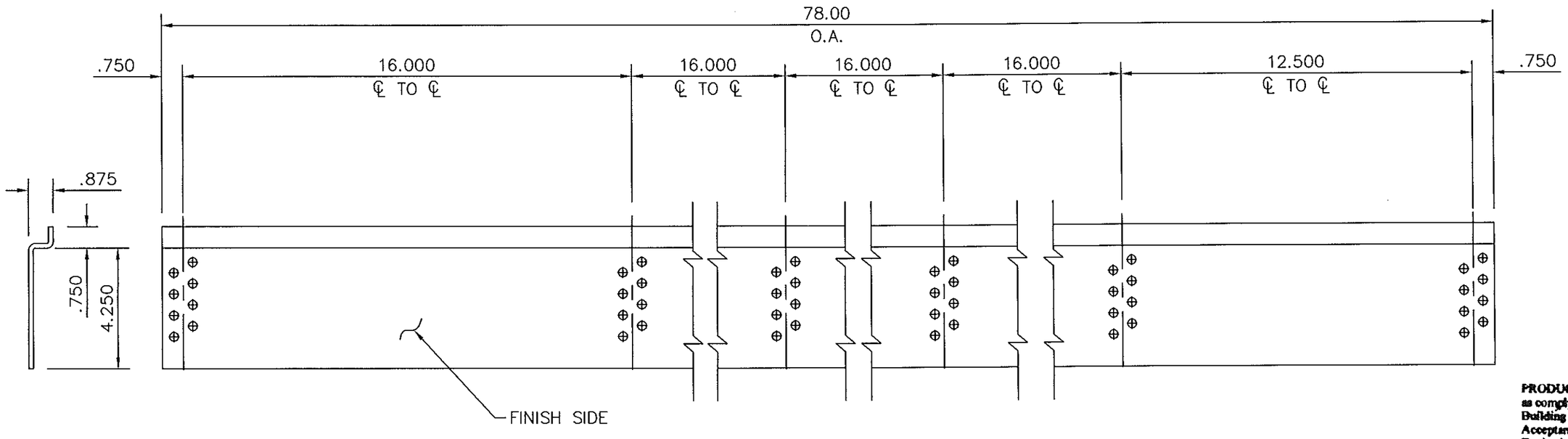

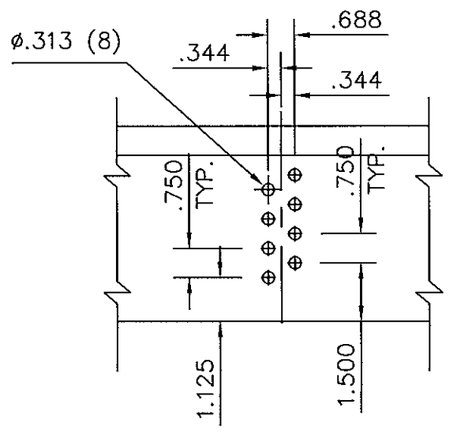

DESCRIPTION	"Z" SUBGIRT			
PART #	QTY.	LENGTH	FIELD APPLIED	SHOP APPLIED
P002	4	78.00		X

PRODUCT REVISED
as complying with the Florida Building Code
Acceptance No 14-0605.08
Expiration Date 06/10/2019
By _____
Miami Dade Product Control

TRINITY ERD
BUILDING SCIENCE RESEARCH | DESIGN | CONSULTATION
353 Christian Street, Unit #13
Oxford, CT 06478
TEL: 203 262 9245
FAX: 203 262 9243
WWW.TRINITYERD.COM

ROBERT NIEMINEN LICENSE No 59166 06/10/2014 STATE OF FLORIDA PROFESSIONAL ENGINEER

Firestone BUILDING PRODUCTS UNA-CLAD
NATIONWIDE 1-800-426-7737 LOCAL (763) 576-9595
Copyright © by Firestone Metal Products / UNA-CLAD

PANEL DESCRIPTION Series 10			
PANEL NUMBER	QTY.	WIDTH	LENGTH
PFD = PANEL FACE DIMENSION			

CUSTOMER: FIRESTONE BUILDING PRODUCTS		DRAWN BY: JWJ
FAB NUMBER: 14485	RELEASE: 1	SCALE: 1=4
MATERIAL: GALV. STEEL		DATE: 06.10.14
THICKNESS: 8 Ga. (0.164)	DRAWING NO. NPD2008-021 Rel1 P002.dwg	
FINISH: MILL FINISH	PRE: ☐ POST ☐	PAGE NO. P2

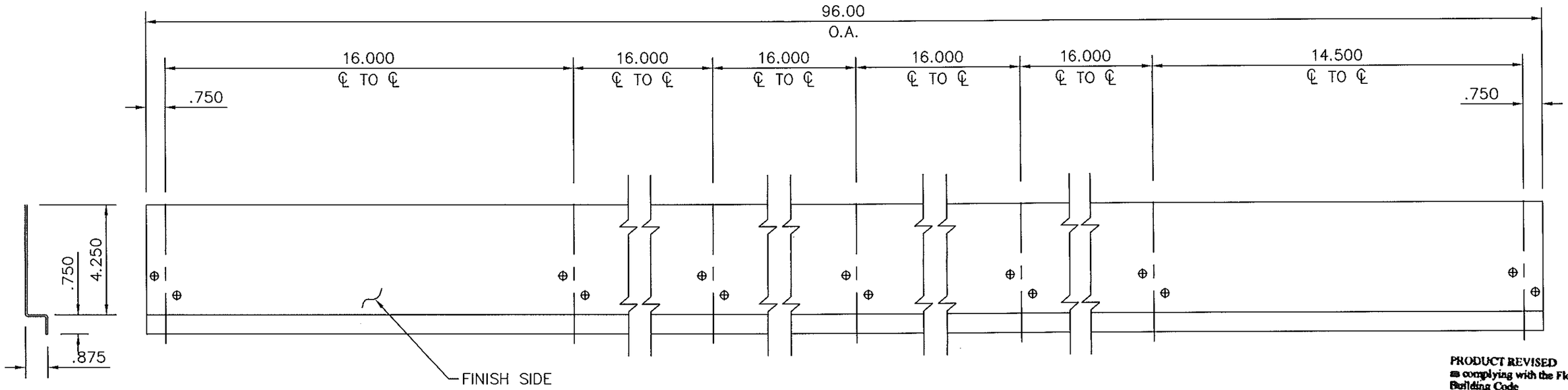

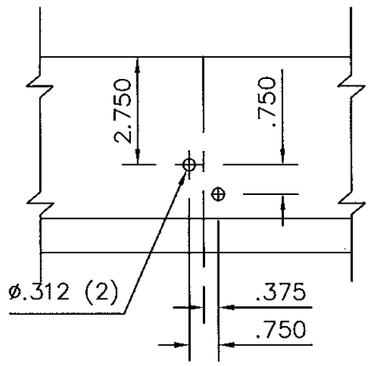

DESCRIPTION	"Z" SUBGRIT			
PART #	QTY.	LENGTH	FIELD APPLIED	SHOP APPLIED
P003	4	96.00		X

PRODUCT REVISED
as complying with the Florida Building Code
Acceptance No 14-0605.08
Expiration Date 06/10/2019
By
Miami Dade Product Control

TRINITY ERD
BUILDING SCIENCE RESEARCH | DESIGN | CONSULTATION
353 Christian Street, Unit #13
Oxford, CT 06478
TEL: 203 262 9245
FAX: 203 262 9243
WWW.TRINITYERD.COM

ROBERT NIEMINEN LICENSE No 59166 06/10/2014 STATE OF FLORIDA PROFESSIONAL ENGINEER

16 OF 23 PAGES

Firestone BUILDING PRODUCTS UNA-CLAD
NATIONWIDE 1-800-426-7737 LOCAL (763) 576-9595
Copyright © by Firestone Metal Products / UNA-CLAD

PANEL DESCRIPTION Series 10

PANEL NUMBER	QTY.	WIDTH	LENGTH

PFD = PANEL FACE DIMENSION

CUSTOMER: FIRESTONE BUILDING PRODUCTS		DRAWN BY: JWJ
FAB NUMBER: 14485	RELEASE: 1	SCALE: 1=4
MATERIAL: GALV. STEEL		DATE: 06.10.14
THICKNESS: 14 Ga. (0.075)	DRAWING NO. NPD2008-021 Rel1 P003.dwg	
FINISH: MILL FINISH	PRE: ☐ POST ☐	PAGE NO. P3

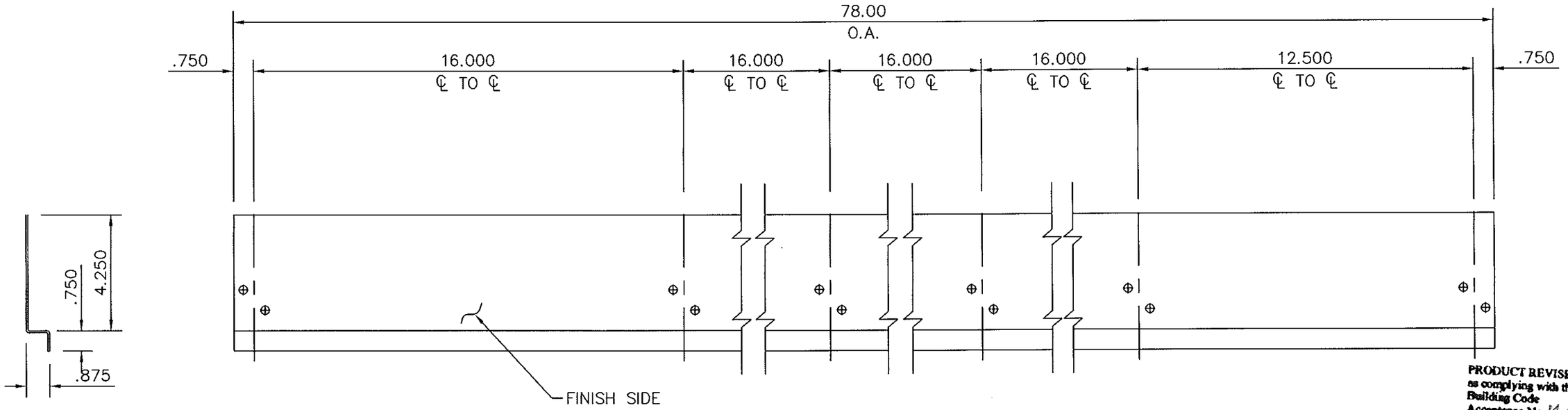

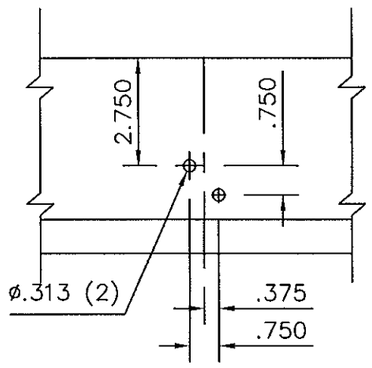

DESCRIPTION	"Z" SUBGRIT			
PART #	QTY.	LENGTH	FIELD APPLIED	SHOP APPLIED
P004	4	78.00		X

PRODUCT REVISED
as complying with the Florida Building Code
Acceptance No 14-0605.08
Expiration Date 06/10/2019
By
Miami Dade Product Control

TRINITY ERD
BUILDING SCIENCE RESEARCH | DESIGN | CONSULTATION
353 Christian Street, Unit #13
Oxford, CT 06478
TEL: 203 262 9245
FAX: 203 262 9243
WWW.TRINITYERD.COM

ROBERT NIEMINEN LICENSE No 59166 6/16/2014 STATE OF FLORIDA PROFESSIONAL ENGINEER

Firestone BUILDING PRODUCTS
UNA-CLAD
NATIONWIDE 1-800-426-7737 LOCAL (763) 576-9595
Copyright © by Firestone Metal Products / UNA-CLAD

PANEL DESCRIPTION Series 10

PANEL NUMBER	QTY.	WIDTH	LENGTH

PFD = PANEL FACE DIMENSION

CUSTOMER: FIRESTONE BUILDING PRODUCTS
FAB NUMBER: 14485 RELEASE: 1
MATERIAL: GALV. STEEL
THICKNESS: 14 Ga. (0.075) DRAWING NO. NPD2008-021 Rel1 P004.dwg
FINISH: MILL FINISH PRE: ☐ POST ☐

DRAWN BY: JWJ
SCALE: 1=4
DATE: 06.10.14
PAGE NO. P4

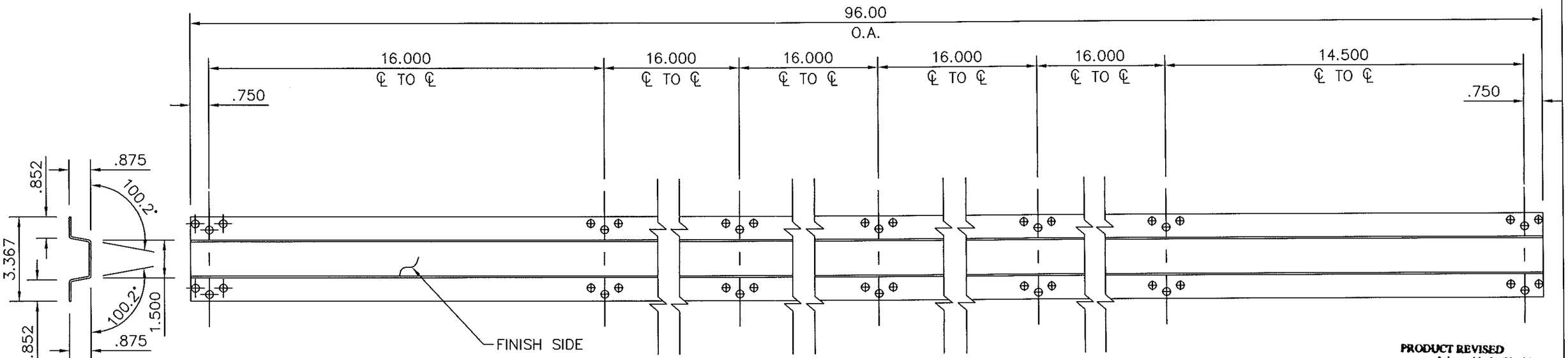

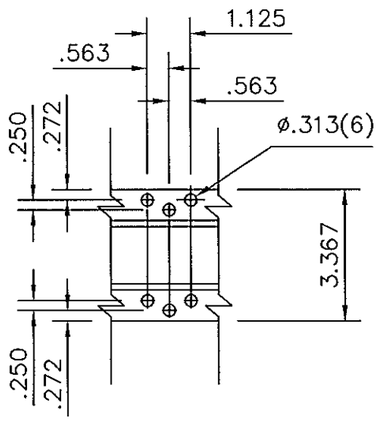

DESCRIPTION	HAT CHANNEL			
PART #	QTY.	LENGTH	FIELD APPLIED	SHOP APPLIED
P005	4	96.00		X

PRODUCT REVISED
as complying with the Florida Building Code
Acceptance No FL#605.08
Expiration Date 06/10/2019
By
Miami Dade Product Control

TRINITY ERD
BUILDING SCIENCE RESEARCH | DESIGN | CONSULTATION
353 Christian Street, Unit #13
Oxford, CT 06478
TEL: 203 262 9245
FAX: 203 262 9243
WWW.TRINITYERD.COM

ROBERT NIEMINEN LICENSE No 59166 6/10/2019 STATE OF FLORIDA PROFESSIONAL ENGINEER

Firestone BUILDING PRODUCTS UNA-CLAD
NATIONWIDE 1-800-426-7737 LOCAL (763) 576-9595
Copyright © by Firestone Metal Products / UNA-CLAD

PANEL DESCRIPTION Series 10

PANEL NUMBER	QTY.	WIDTH	LENGTH

PFD = PANEL FACE DIMENSION

CUSTOMER: FIRESTONE BUILDING PRODUCTS		DRAWN BY: JWJ
FAB NUMBER: 14485	RELEASE: 1	SCALE: 1=4
MATERIAL: GALV. STEEL		DATE: 06.10.14
THICKNESS: 14 Ga. (0.075)	DRAWING NO. NPD2008-021 Rel1 P005.dwg	
FINISH: MILL FINISH	PRE: ☐ POST ☐	PAGE NO. P5

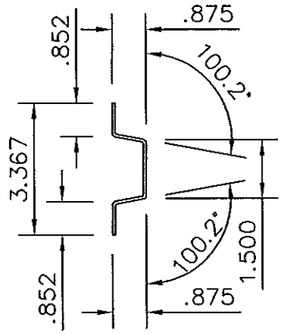

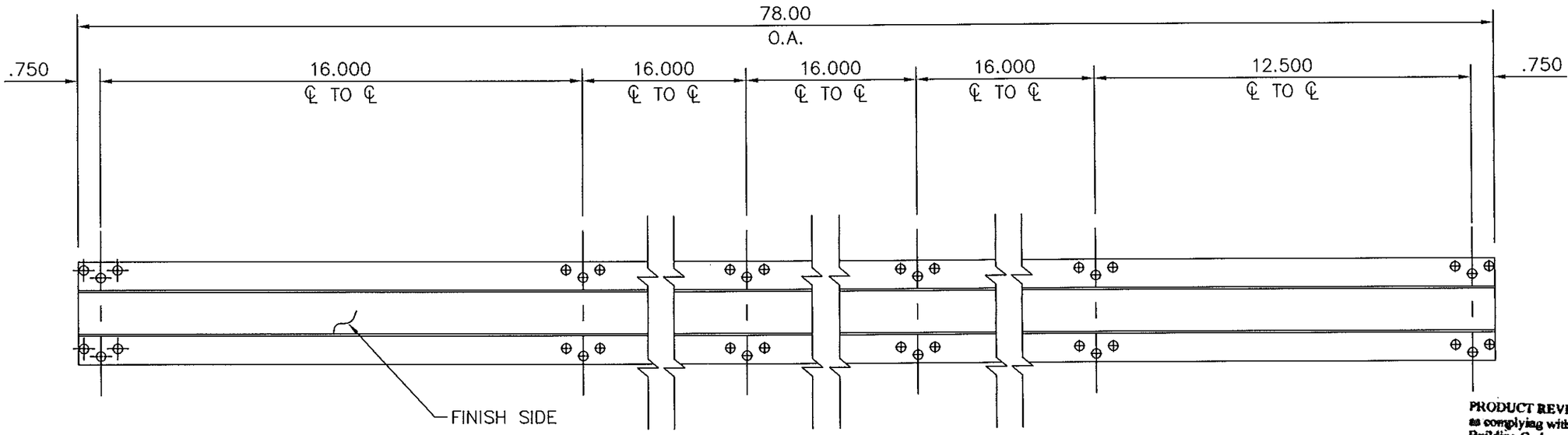

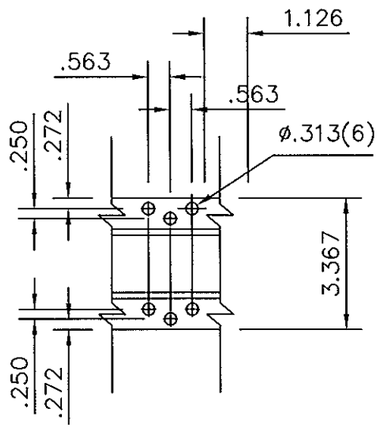

DESCRIPTION	HAT CHANNEL			
PART #	QTY.	LENGTH	FIELD APPLIED	SHOP APPLIED
P006	4	78.00		X

PRODUCT REVISED
as complying with the Florida Building Code
Acceptance No. 14-0605.08
Expiration Date 06/10/2019
By
Miami Dade Product Control

TRINITY ERD
BUILDING SCIENCE RESEARCH | DESIGN | CONSULTATION
353 Christian Street, Unit #13
Oxford, CT 06478
TEL: 203 262 9245
FAX: 203 262 9243
WWW.TRINITYERD.COM

ROBERT NIEMINEN
LICENSE
No. 59166
06/10/2014
STATE OF FLORIDA
PROFESSIONAL ENGINEER

Firestone BUILDING PRODUCTS
UNA-CLAD
NATIONWIDE 1-800-426-7737 LOCAL (763) 576-9595
Copyright © by Firestone Metal Products / UNA-CLAD

PANEL DESCRIPTION Series 10

PANEL NUMBER	QTY.	WIDTH	LENGTH

PFD = PANEL FACE DIMENSION

CUSTOMER: FIRESTONE BUILDING PRODUCTS		DRAWN BY: JWJ
FAB NUMBER: 14485	RELEASE: 1	SCALE: 1=4
MATERIAL: GALV. STEEL		DATE: 06.10.14
THICKNESS: 14 Ga. (0.075)	DRAWING NO. NPD2008-021 Rel1 P006.dwg	
FINISH: MILL FINISH	PRE: ☐ POST ☐	PAGE NO. P6

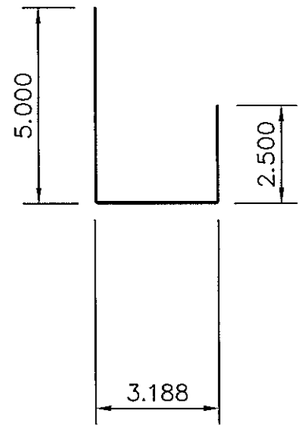

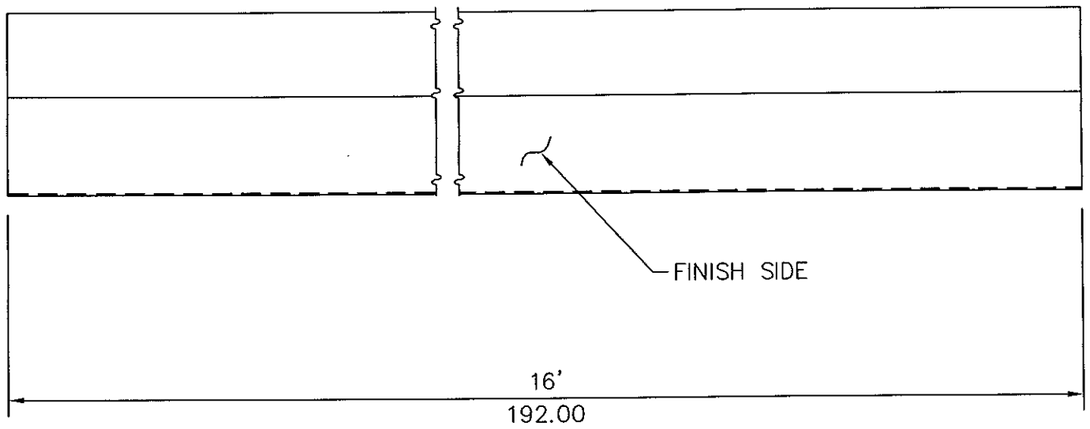

PRODUCT REVISED
as complying with the Florida Building Code
Acceptance No 14-0605.09
Expiration Date 06/10/2019
By _____
Miami Dade Product Control

DESCRIPTION	.040 ALUM FLASHING			
PART #	QTY.	LENGTH	FIELD APPLIED	SHOP APPLIED
P007	12	192.00		X

TRINITY ERD
BUILDING SCIENCE RESEARCH | DESIGN | CONSULTATION
353 Christian Street, Unit #13
Oxford, CT 06478
TEL: 203 262 9245
FAX: 203 262 9243
WWW.TRINITYERD.COM

ROBERT NIEMINEN LICENSE No 59166 06/10/2014 STATE OF FLORIDA PROFESSIONAL ENGINEER

Firestone BUILDING PRODUCTS UNA-CLAD
NATIONWIDE 1-800-426-7737 LOCAL (763) 576-9595
Copyright © by Firestone Metal Products / UNA-CLAD

PANEL DESCRIPTION Series 10

PANEL NUMBER	QTY.	WIDTH	LENGTH

PFD = PANEL FACE DIMENSION

CUSTOMER: FIRESTONE BUILDING PRODUCTS		DRAWN BY: JWJ
FAB NUMBER: 14485	RELEASE: 1	SCALE: 1=4
MATERIAL: 3003-H14		DATE: 06.10.14
THICKNESS: .040	DRAWING NO. NPD2008-021 Rel1 P007.dwg	
FINISH: SERRIA TAN	PRE: ☐ POST ☐	PAGE NO. P7

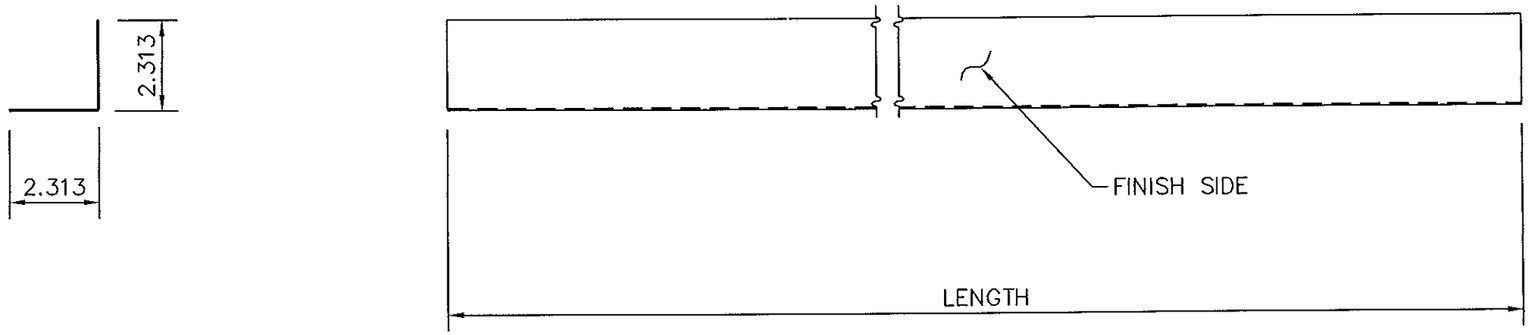

PRODUCT REVISED
as complying with the Florida
Building Code
Acceptance No 14-0605.08
Expiration Date 06/10/2019
By
Miami Dade Product Control

DESCRIPTION	.040 ALUM FLASHING			
PART #	QTY.	LENGTH	FIELD APPLIED	SHOP APPLIED
P008	4	83.50		X

TRINITY ERD
BUILDING SCIENCE RESEARCH | DESIGN | CONSULTATION
353 Christian Street, Unit #13
Oxford, CT 06478
TEL: 203 262 9245
FAX: 203 262 9243
WWW.TRINITYERD.COM

ROBERT NIEMINEN LICENSE No 59166 06/10/2014 STATE OF FLORIDA PROFESSIONAL ENGINEER

Firestone BUILDING PRODUCTS
UNA-CLAD
NATIONWIDE 1-800-426-7737 LOCAL (763) 576-9595
Copyright © by Firestone Metal Products / UNA-CLAD

PANEL DESCRIPTION Series 10

PANEL NUMBER	QTY.	WIDTH	LENGTH

PFD = PANEL FACE DIMENSION

CUSTOMER: FIRESTONE BUILDING PRODUCTS		DRAWN BY: JWJ
FAB NUMBER: 14485	RELEASE: 1	SCALE: 1=4
MATERIAL: 3003-H14		DATE: 06.10.14
THICKNESS: .040	DRAWING NO. NPD2008-021 Rel1 P008.dwg	
FINISH: SERRIA TAN	PRE: ☐ POST ☐	PAGE NO. P8

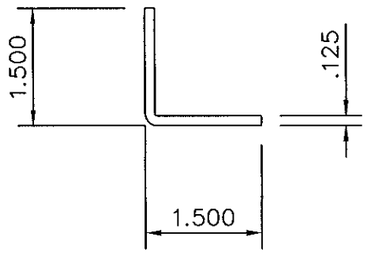

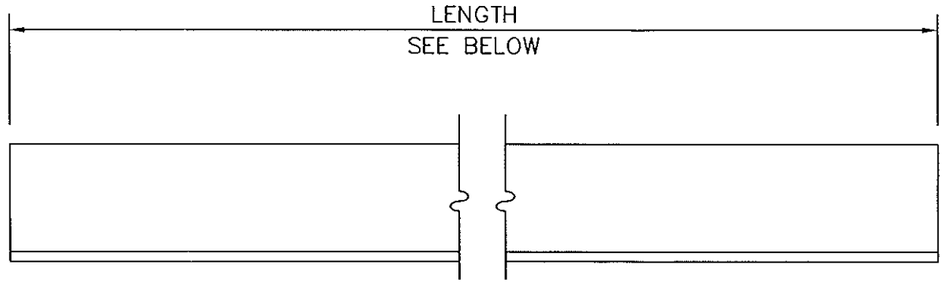

DESCRIPTION	(.125) ALUM FORMED ANGLE			
PART #	QTY.	LENGTH	FIELD APPLIED	SHOP APPLIED
P009A	4	12.875		X
P009B	4	56.375		X

PRODUCT REVISED
as complying with the Florida Building Code
Acceptance No 14060509
Expiration Date 26/10/2019
By _____
Miami Dade Product Control

TRINITY ERD
BUILDING SCIENCE RESEARCH | DESIGN | CONSULTATION
353 Christian Street, Unit #13
Oxford, CT 06478
TEL: 203 262 9245
FAX: 203 262 9243
WWW.TRINITYERD.COM

ROBERT NIEMINEN LICENSE No. 59166 05/16/2014 STATE OF FLORIDA PROFESSIONAL ENGINEER

Firestone BUILDING PRODUCTS UNA-CLAD
NATIONWIDE 1-800-426-7737 LOCAL (763) 576-9595
Copyright © by Firestone Metal Products / UNA-CLAD

PANEL DESCRIPTION Series 10

PANEL NUMBER	QTY.	WIDTH	LENGTH

PFD = PANEL FACE DIMENSION

CUSTOMER: FIRESTONE BUILDING PRODUCTS		DRAWN BY: JWJ
FAB NUMBER: 14485	RELEASE: 1	SCALE: 1=2
MATERIAL: ALUMINUM 5052-H32		DATE: 06.10.14
THICKNESS: .125	DRAWING NO. NPD2008-021 Rel1 P009.dwg	
FINISH: MILL FINISH	PRE: ☐ POST ☐	PAGE NO. P9

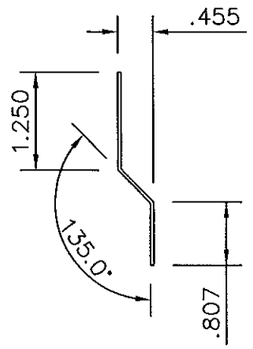

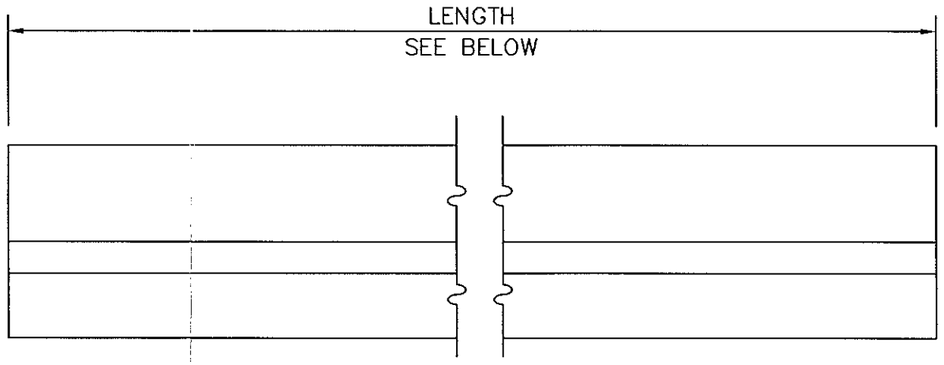

DESCRIPTION	(.040) ALUM FORMED "Z" REINFORCEMENT			
PART #	QTY.	LENGTH	FIELD APPLIED	SHOP APPLIED
P010A	4	13.000		X
P010B	4	56.500		X

PRODUCT REVISED
as complying with the Florida Building Code
Acceptance No 14-0605.08
Expiration Date 06/10/2019
By
Miami Dade Product Control

TRINITY ERD
BUILDING SCIENCE RESEARCH | DESIGN | CONSULTATION

353 Christian Street, Unit #B
Oxford, CT 06478

TEL: 203 262 9245
FAX: 203 262 9243
WWW.TRINITYERD.COM

ROBERT NIEMINEN LICENSE No 59166 06/10/2014 STATE OF FLORIDA PROFESSIONAL ENGINEER

Firestone BUILDING PRODUCTS
UNA-CLAD
NATIONWIDE 1-800-426-7737 LOCAL (763) 576-9595
Copyright © by Firestone Metal Products / UNA-CLAD

PANEL DESCRIPTION Series 10

PANEL NUMBER	QTY.	WIDTH	LENGTH

PFD = PANEL FACE DIMENSION

CUSTOMER: FIRESTONE BUILDING PRODUCTS		DRAWN BY: JWJ
FAB NUMBER: 14485	RELEASE: 1	SCALE: 1=2
MATERIAL: ALUMINUM 3003-H14		DATE: 06.10.14
THICKNESS: .040	DRAWING NO. NPD2008-021 Rel1 P010.dwg	
FINISH: SERRIA TAN	PRE: ☐ POST ☐	PAGE NO. P10