MIAMI-DADE COUNTY
DEPARTMENT OF REGULATORY AND ECONOMIC RESOURCES (RER)
BOARD AND CODE ADMINISTRATION DIVISION

MIAMI–DADE COUNTY, FLORIDA
PRODUCT CONTROL SECTION
11805 SW 26 Street, Room 208
T (786) 315–2590 F (786) 315–2599
www.miamidade.gov/economy

NOTICE OF ACCEPTANCE (NOA)

Andersen Corporation, Inc.
551 North Maine Street
Bayport, MN 55003–1096

SCOPE:

This NOA is being issued under the applicable rules and regulations governing the use of construction materials. The documentation submitted has been reviewed and accepted by Miami–Dade County RER–Product Control Section to be used in Miami–Dade County and other areas where allowed by the Authority Having Jurisdiction (AHJ).

This NOA shall not be valid after the expiration date stated below. The Miami–Dade County Product Control Section (In Miami–Dade County) and/ or the AHJ (in areas other than Miami–Dade County) reserve the right to have this product or material tested for quality assurance purposes. If this product or material fails to perform in the accepted manner, the manufacturer will incur the expense of such testing and the AHJ may immediately revoke, modify, or suspend the use of such product or material within their jurisdiction. RER reserves the right to revoke this acceptance, if it is determined by Miami–Dade County Product Control Section that this product or material fails to meet the requirements of the applicable building code.

This product is approved as described herein, and has been designed to comply with the Florida Building Code, including the High Velocity Hurricane Zone.

DESCRIPTION: Series "$5^9/_{16}$" and $7^9/_{16}$" Exterior Fiberglass Clad" Laminated Veneered Lumber (LVL) Clipped Wood Mullion – L.M.I.

APPROVAL DOCUMENT: Drawing No. **M01–02**, titled "Laminated Veneered Lumber Mullion System" Sheets 01 through 10 of 10, dated 07/31/01 with the latest revision "**H**' dated 09/18/14, prepared by Al–Farooq Corporation, signed and sealed by Javad Ahmad, P. E., bearing the Miami–Dade County Product Control Section Renewal stamp with the Notice of Acceptance number and Expiration date by the Miami–Dade County Product Control Section.

MISSILE IMPACT RATING: Large and Small Missile Impact Resistant

LIMITATION:

1. Secure The Fiberglass Clad w/ $^7/_{16}$"x ½" Staples At 1" to 3" From Each End and 14" to 18" On Center.

LABELING: Each unit shall bear a permanent label with the manufacturer's name or logo, city, state, series, and following statement: "Miami–Dade County Product Control Approved", unless otherwise noted herein.

REVISION of this NOA shall be considered after a renewal application has been filed and there has been no change in the applicable building code negatively affecting the performance of this product.

TERMINATION of this NOA will occur after the expiration date or if there has been a revision or change in the materials, use, and/ or manufacture of the product or process. Misuse of this NOA as an endorsement of any product, for sales, advertising or any other purposes shall automatically terminate this NOA. Failure to comply with any section of this NOA shall be cause for termination and removal of NOA.

ADVERTISEMENT: The NOA number preceded by the words Miami–Dade County, Florida, and followed by the expiration date may be displayed in advertising literature. If any portion of the NOA is displayed, then it shall be done in its entirety.

INSPECTION: A copy of this entire NOA shall be provided to the user by the manufacturer or its distributors and shall be available for inspection at the job site at the request of the Building Official.

This NOA **renews NOA No. 13–0423.14** and consists of this page 1 and evidence pages E–1 and E–2, as well as approval document mentioned above.

The submitted documentation was reviewed by **Jaime D. Gascon, P. E.**

MIAMI-DADE COUNTY APPROVED

J. Gascon 9/24/14

Andersen Corporation, Inc.

NOTICE OF ACCEPTANCE: EVIDENCE SUBMITTED

A. DRAWINGS

1. Manufacturer's die drawings and sections.
2. Drawing No. **M01-02**, titled "Laminated Veneered Lumber Mullion System" Sheets 01 through 10 of 10, dated 07/31/01, with the latest revision "**H**" dated 09/18/14, prepared by Al–Farooq Corporation, signed and sealed by Javad Ahmad, P. E.

B. TESTS

1. Test reports on: 1) Uniform Static Air Pressure Test, Loading per FBC, TAS 202–94
   2) Large Missile Impact Test per FBC, TAS 201–94
   3) Cyclic Wind Pressure Loading per FBC, TAS 203–94

   along with marked–up drawings and installation diagram of a mullion system, prepared by Architectural Testing, Inc., Test Report No. **ATI–D0076.01–201–18**, dated 04/15/14, signed and sealed by Shawn G. Collins, P. E.
2. Test reports on: 1) Air Infiltration Test, per FBC, TAS 202–94
   2) Uniform Static Air Pressure Test, Loading per FBC, TAS 202–94
   3) Water Resistance Test, per FBC, TAS 202–94
   4) Large Missile Impact Test per FBC, TAS 201–94
   5) Cyclic Wind Pressure Loading per FBC, TAS 203–94

   along with marked–up drawings and installation diagram of a mullion system, prepared by Architectural Testing, Inc., Test Report No. **ATI–02–34211.01**, dated 05/22/02, signed and sealed by Steven Ulrich, P. E.
   (Submitted under previous NOA No. 03–0327.13)

C. CALCULATIONS

1. Anchor verification calculations and structural analysis, complying with **FBC 5th Edition (2014)**, dated 06/03/14, prepared by Al–Farooq Corporation, with the latest revision, dated 09/22/14, signed and sealed by Javad Ahmad, P. E.

D. QUALITY ASSURANCE

1. Miami–Dade Department of Regulatory and Economic Resources (RER).

E. MATERIAL CERTIFICATIONS

1. None.

F. STATEMENTS

1. Statement letter of no financial interest, conformance to and complying with **FBC 5th Edition (2014)**, issued by Al–Farooq Corporation, dated 05/23/14, signed and sealed by Javad Ahmad, P. E.

Jaime D. Gascon, P. E.
Product Control Section Supervisor
NOA No. 14–0610.05
Expiration Date: June 19, 2018
Approval Date: October 02, 2014

NOTICE OF ACCEPTANCE: EVIDENCE SUBMITTED

F. STATEMENTS (CONTINUED)

2. Laboratory compliance letter for Test Report No. **ATI–D0076.01–201–18**, issued by Architectural Testing, Inc., dated 04/15/14, signed and sealed by Shawn G. Collins, P. E.
3. Department of State Certification of **ANDERSEN CORPORATION, INC.** as a for profit corporation, active and organized under the laws of the State of Florida, dated 04/09/14 and signed by Kurt S. Browning, Secretary of State.
4. Testing agreement letter, dated 03/19/13 between Architectural Testing, Inc. (ATI) and Andersen Corporation, issued by ATI and signed by Daniel A. Johnson.
   (Submitted under previous NOA No. 13–0423.14)
5. One year approval issued, subjected to successful verification test submitted, the final approval will be issued for the balance of the remaining 4 years, of a total of 5 years.
   (Submitted under previous NOA No. 13–0423.14)
6. Statement letter of no financial interest, conformance and complying with **FBC–2010**, issued by Al–Farooq Corporation, dated 01/24/12, signed and sealed by Javad Ahmad, P. E.
   (Submitted under previous NOA No. 12–0308.30)
7. Laboratory compliance letter for Test Report No. **ATI–02-34211.01**, issued by Architectural Testing, Inc., dated 05/22/02, signed and sealed by Steven Ulrich, P. E.
   (Submitted under previous NOA No. 03–0327.13)

G. OTHERS

1. Notice of Acceptance No. **13–0423.14**, issued to Andersen Corporation, Inc. for their Series "**$5^{9}/_{16}$" & $7^{9}/_{16}$" Laminated Veneered Lumber (LVL) Clipped Wood Mullion – L.M.I.** ", approved on 06/13/13 and expiring on 06/19/14.

Jaime D. Gascon, P. E.
Product Control Section Supervisor
NOA No. 14–0610.05
Expiration Date: June 19, 2018
Approval Date: October 02, 2014

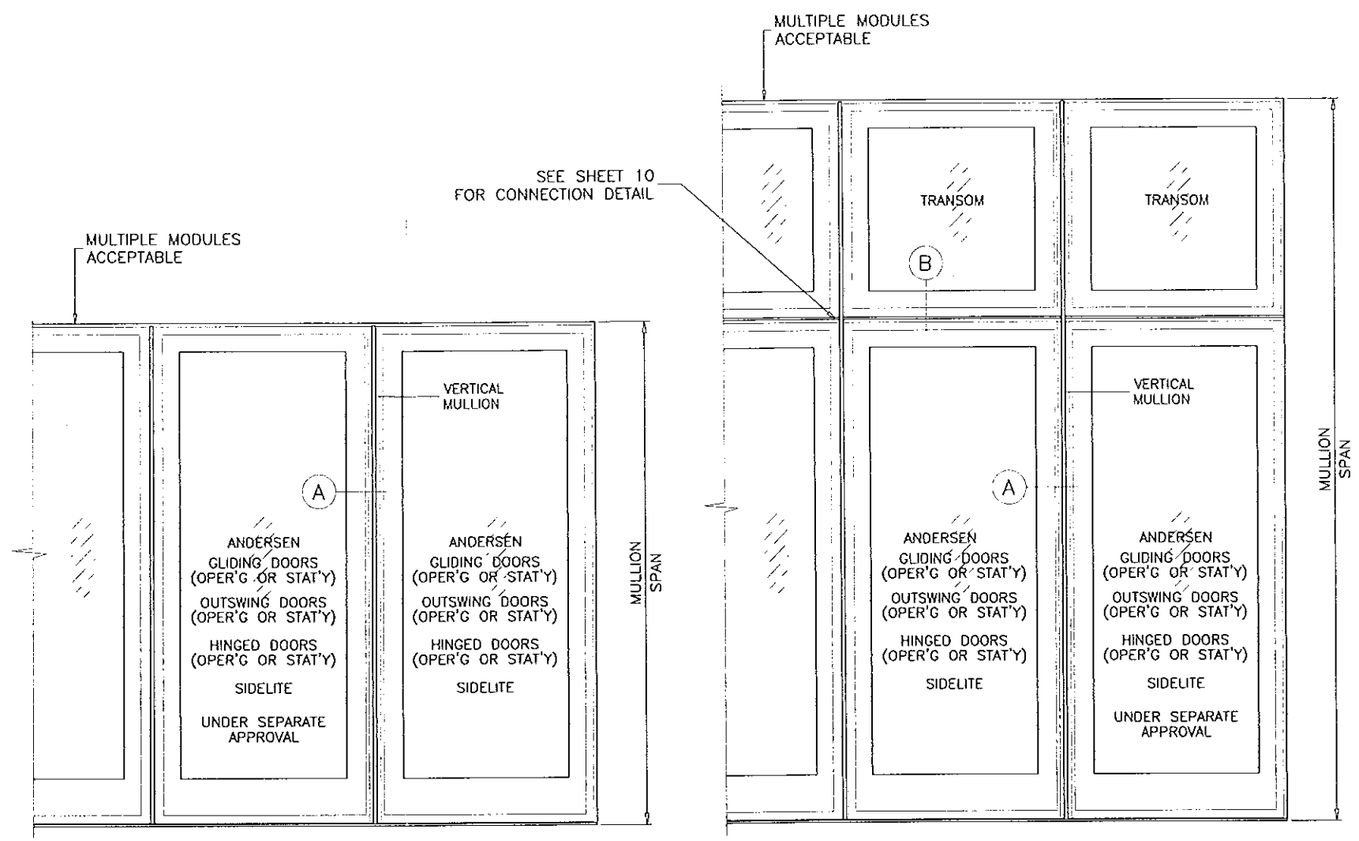

TYPICAL MULLION ARRANGEMENT

LAMINATED VENEERED LUMBER (LVL) MULLION SYSTEM WINDOW FRAME MEMBERS INCLUDED IN PROPERTIES

DESIGN LOAD RATING FOR THIS MULLION TO BE AS PER CHARTS SHOWN ON SHEETS 3 THRU 6.

APPROVAL APPLIES TO MULLIONS COMBINATIONS WITH ANDERSEN FRAME MEMBERS OF OUTSWING/INSWING DOORS, GLIDING DOORS, SIDELITES AND TRANSOMS IN ANY COMBINATIONS, SEE SHEET 2 FOR FRAME MEMBER DETAILS.

SEE SEPARATE NOA FOR WINDOW/DOOR ANCHORS AND DESIGN LOAD CAPACITY.

LOWEST VALUE RESULTING FROM MULLION, WINDOW OR DOOR APPROVAL WILL APPLY TO ENTIRE SYSTEM.

THIS PRODUCT HAS BEEN DESIGNED AND TESTED TO COMPLY WITH THE REQUIREMENTS OF THE FLORIDA BUILDING CODE INCLUDING HIGH VELOCITY HURRICANE ZONE (HVHZ).

ALL GLAZING PRODUCTS USED WITH THESE MULLIONS MUST MEET THE APPLICABLE BUILDING CODE REQUIREMENTS I.E: WIND LOAD, WATER INFILTRATION, FORCED ENTRY RESISTANCE, SAFEGUARDS ETC.

WOOD BUCKS BY OTHERS, MUST BE ANCHORED PROPERLY TO TRANSFER LOADS TO THE STRUCTURE.

ANCHORS SHALL BE AS LISTED, SPACED AS SHOWN ON DETAILS, EMBEDMENT TO BASE MATERIAL SHALL BE BEYOND WALL COVERING (STUCCO, TILE ETC.).

ANCHORING CONDITIONS OTHER THAN THOSE SHOWN IN THESE DETAILS ARE NOT PART OF THIS APPROVAL.

A LOAD DURATION INCREASE IS USED IN DESIGN OF ANCHORS INTO WOOD ONLY.

MATERIALS INCLUDING BUT NOT LIMITED TO STEEL/METAL SCREWS, THAT COME INTO CONTACT WITH OTHER DISSIMILAR MATERIALS SHALL MEET THE REQUIREMENTS OF THE FLORIDA BUILDING CODE.

INDEX OF DRAWING

SHEET NO.	DESCRIPTION
1	GENERAL NOTES
2	FRAME & MULLION DETAILS
3	CHART #1 FOR 5-9/16" & 7-9/16" HORIZONTAL MULLIONS
4	CHART #2 FOR 5-9/16" & 7-9/16" VERTICAL MULLION
5 & 6	CHART #3 FOR 7-9/16" VERTICAL MULLIONS
7	DETAIL 'A' SHOWS VERT. MULLION CONNECTION WITH FRAME MEMBERS DETAIL 'B' SHOWS HORIZ. MULLION CONNECTION WITH FRAME MEMBERS
8	5-9/16" HORIZ./VERT. MULLION CONNECTION DETAILS
9	7-9/16" HORIZ./VERT. MULLION CONNECTION DETAILS
10	7-9/16" VERT. MULLION CONNECTION DETAIL TO HORIZ. MULLION

MULLION SYSTEM IS RATED FOR LARGE & SMALL MISSILE IMPACT. AND CAN BE USED WITH ALL MIAMI-DADE COUNTY APPROVED IMPACT AND NON-IMPACT RESISTANT PRODUCTS.

PRODUCT RENEWED
as complying with the Florida
Building Code
Acceptance No 14-0610.05
Expiration Date ~~5/6/19~~ 2018
By
Miami Dade Product Control

Engr: JAVAD AHMAD
CIVIL
FLA. PE # 70592
C.A.N. 3538

SEP 22 2014

AL-FAROOQ CORPORATION
ENGINEERS & PRODUCT DEVELOPMENT
1235 S.W. 87 AVE
MIAMI, FLORIDA 33174
TEL. (305) 264-8100 FAX. (305) 262-6978

MULLION\W01-02AC

LAMINATED VENEERED LUMBER MULLION SYSTEM

ANDERSEN CORPORATION
100 FOURTH AVE. NORTH
BAYPORT, MN. 55003-1096
TEL. (800) 426-7691 FAX (-)

revisions:

no.	date	by	description
E	04.19.10		UPDATED TO 2007 FBC
F	01.26.12		UPDATED TO 2010 FBC
G	05.29.14		UPDATED TO 2014 FBC
H	09.18.14		NO CHANGE THIS SHEET

date: 07-31-01
scale: 3/8"=1'-0"
dr. by: HAMID
chk. by:

drawing no.
M01-02

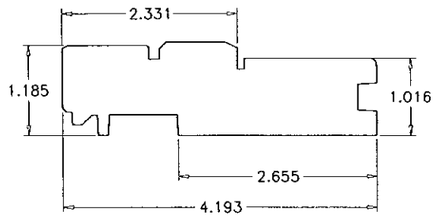

FWO
OUTSWING DOOR HEAD/JAMB (OPERATING/STATIONARY)
57019
WOOD

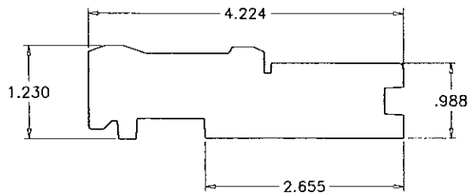

FWH
HINGED DOOR HEAD/JAMB (OPERATING/STATIONARY)
52253
WOOD

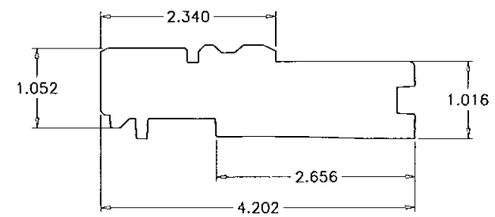

FWT/FWSL
TRANSOM/SIDELITE FRAME
–
–

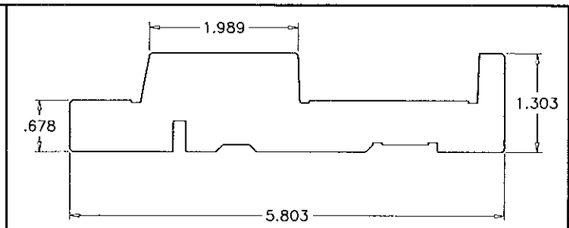

FWG
GLIDING DOOR JAMB (OPERATING)
50022
WOOD

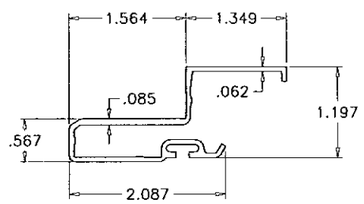

FWO
OUTSWING HEAD/JAMB COVER (OPERATING/STATIONARY)
57031
FIBERGLASS

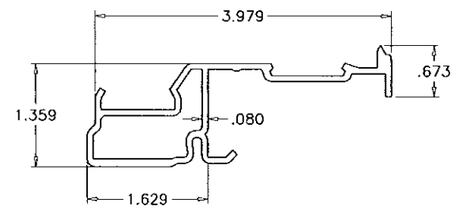

FWH
HINGED HEAD/JAMB COVER (OPERATING/STATIONARY)
52225
FIBERGLASS

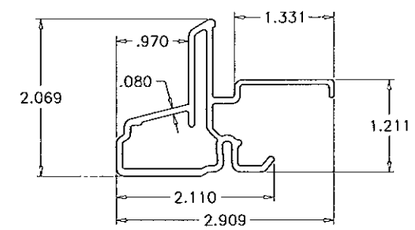

FWT/FWSL
TRANSOM/SIDELITE FRAME COVER
–
–

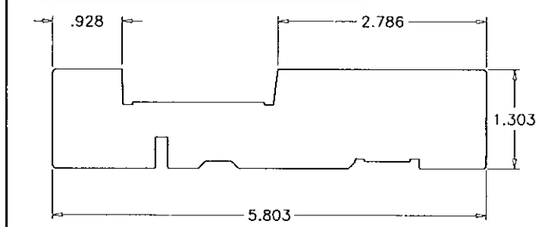

FWG
GLIDING DOOR JAMB (STATIONARY)
50017
WOOD

LAMINATED VENEERED LUMBER (LVL)

Fb = 2.6 Ksi Bending.

Fc = 2.51 Ksi Compression.

Minimum Fv=190 Lbs To Maximum Fv=275 Lbs Lateral Forces.

E = 1,100 Ksi.

Specific Gravity minimum SG=0.40 To maximum SG=0.56.

Notches, copies and holes in wood members are not permitted unless specifically detailed.

Notches, copies and holes in pre–engineered members shall be in accordance and approval by the manufacturer.

Lumber moisture content shall be less than 19%.

All lumber shall have a grade stamp for visual inspection in the field per NDS.

Maximum allowable deflection L/180, modules of elasticity (E) to modulus of rigidity ratio (G) E/G = 16, Ration of lamination thickness to radius of curvature of Cc = 1/100, flat use factor Cfu per NDS 2012.

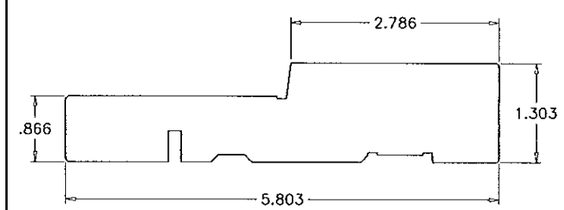

FWG
GLIDING DOOR SIDELITE
–
WOOD

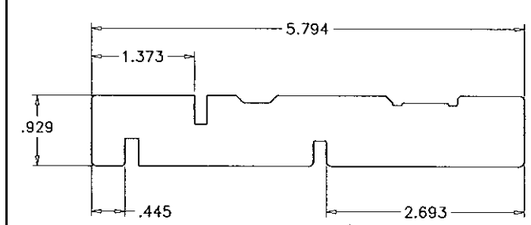

FWG
GLIDING DOOR FRAME HEAD
–
WOOD

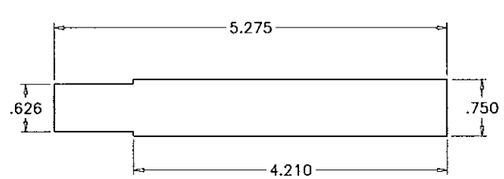

5–9/16" MULLION
29353
LAMINATED VENEERED LUMBER

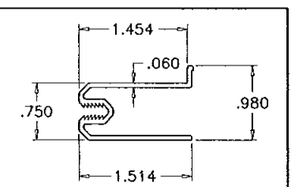

MULLION COVER
29351
ALUMINUM

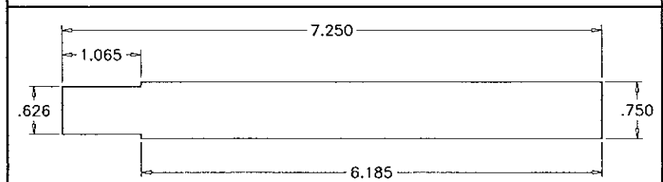

7–9/16" MULLION
29434
LAMINATED VENEERED LUMBER

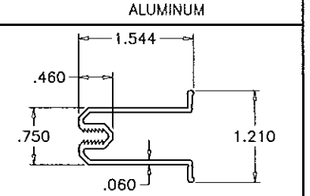

MULLION COVER
29351
ALUMINUM

LAMINATED VENEERED LUMBER (LVL) MULLION SYSTEM
TO MEET ALL REQUIREMENTS OF

A. ANSI/AITC A190.1–2012 STRUCTURAL GLUED LAMINATED TIMBER.

B. ANSI 119–2010 STANDARD SPECIFICATION STRUCTURAL GLUED LAMINATED TIMBER.

C. ANSI/AITC A117–04 STRUCTURAL GLULAM TIMBER.

D. ANSI/APA/AWC/NDS 2012 INCLUDING APPENDIXES G & H, COMMENTARY C5 STRUCTURAL GLUED LAMINATED TIMBER.

PRODUCT RENEWED
as complying with the Florida
Building Code
Acceptance No. 14-0610.06
Expiration Date 06/19/2018
By
Miami Dade Product Control

NOTE:
TYPICAL ANDERSEN FRAME MEMBERS FOR DOORS, TRANSOMS AND SIDELITES UNDER SEPARATE APPROVAL.

ALL WOOD FRAMES TO BE PONDEROSA PINE OR EQUAL (MIN. S.G. = 0.55)

Engr: JAVAD AHMAD
CIVIL
FLA. PE # 70592
C.A.N. 3538

SEP 22 2014

AL-FAROOQ CORPORATION
ENGINEERS & PRODUCT DEVELOPMENT
1235 S.W. 87 AVE
MIAMI, FLORIDA 33174
TEL. (305) 264-8100 FAX. (305) 262-6978

MULLION\W01–02AC

LAMINATED VENEERED LUMBER MULLION SYSTEM

ANDERSEN CORPORATION
100 FOURTH AVE. NORTH
BAYPORT, MN. 55003–1096
TEL. (800) 426–7691 FAX (–)

revisions:

no	date	by	description
E	04.19.10		NO CHANGE THIS SHEET
F	01.26.12		NO CHANGE THIS SHEET
G	05.29.14		NO CHANGE THIS SHEET
H	09.18.14		REV. PER RER COMMENTS

date: 07–31–01
scale: 1/2" = 1"
dr. by: HAMID
chk. by:

drawing no.
M01–02

CHART #1

DESIGN LOAD CAPACITY – PSF HORIZONTAL MULLION				
LENGTH-L2 INCHES	LENGTH-L1 INCHES	MULLION SPAN INCHES	5-9/16" MULLION	7-9/16" MULLION
80"	12-13/16"	48"	77.0	77.0
	17-13/16"		77.0	77.0
	21-13/16"		77.0	77.0
	24-13/16"		77.0	77.0
	12-13/16"	54"	77.0	77.0
	17-13/16"		77.0	77.0
	21-13/16"		77.0	77.0
	24-13/16"		73.7	77.0
	12-13/16"	60"	75.5	77.0
	17-13/16"		66.4	77.0
	21-13/16"		59.8	76.0
	24-13/16"		55.1	70.4
	12-13/16"	66"	59.9	75.6
	17-13/16"		51.6	65.6
	21-13/16"		45.6	58.4
	24-13/16"		41.3	53.3
	12-13/16"	72"	48.1	60.9
	17-13/16"		40.4	51.7
	21-13/16"		34.8	44.9
	24-13/16"		30.8	40.2
82-7/8"	12-13/16"	48"	77.0	77.0
	17-13/16"		77.0	77.0
	21-13/16"		77.0	77.0
	24-13/16"		77.0	77.0
	12-13/16"	54"	77.0	77.0
	17-13/16"		77.0	77.0
	21-13/16"		76.8	77.0
	24-13/16"		71.8	77.0
	12-13/16"	60"	73.2	77.0
	17-13/16"		64.5	77.0
	21-13/16"		58.1	73.9
	24-13/16"		53.6	68.5
	12-13/16"	66"	58.1	73.3
	17-13/16"		50.2	63.7
	21-13/16"		44.3	56.7
	24-13/16"		40.2	51.8
	12-13/16"	72"	46.7	59.1
	17-13/16"		39.2	50.2
	21-13/16"		33.8	43.7
	24-13/16"		30.0	39.2

DESIGN LOAD CAPACITY – PSF HORIZONTAL MULLION				
LENGTH-L2 INCHES	LENGTH-L1 INCHES	MULLION SPAN INCHES	5-9/16" MULLION	7-9/16" MULLION
90"	12-13/16"	48"	77.0	77.0
	17-13/16"		77.0	77.0
	21-13/16"		77.0	77.0
	24-13/16"		77.0	77.0
	12-13/16"	54"	77.0	77.0
	17-13/16"		77.0	77.0
	21-13/16"		71.9	77.0
	24-13/16"		67.3	77.0
	12-13/16"	60"	68.2	77.0
	17-13/16"		60.2	76.2
	21-13/16"		54.4	69.2
	24-13/16"		50.3	64.3
	12-13/16"	66"	54.1	68.2
	17-13/16"		46.8	59.5
	21-13/16"		41.5	53.1
	24-13/16"		37.7	48.6
	12-13/16"	72"	43.4	55.0
	17-13/16"		36.7	46.9
	21-13/16"		31.7	40.9
	24-13/16"		28.2	36.7
95-1/2"	12-13/16"	48"	77.0	77.0
	17-13/16"		77.0	77.0
	21-13/16"		77.0	77.0
	24-13/16"		77.0	77.0
	12-13/16"	54"	77.0	77.0
	17-13/16"		74.2	77.0
	21-13/16"		68.2	77.0
	24-13/16"		64.0	77.0
	12-13/16"	60"	64.4	77.0
	17-13/16"		57.1	72.2
	21-13/16"		51.6	65.7
	24-13/16"		47.8	61.1
	12-13/16"	66"	51.1	64.5
	17-13/16"		44.4	56.4
	21-13/16"		39.4	50.4
	24-13/16"		35.9	46.2
	12-13/16"	72"	41.0	51.9
	17-13/16"		34.7	44.4
	21-13/16"		30.1	38.8
	24-13/16"		26.8	34.9

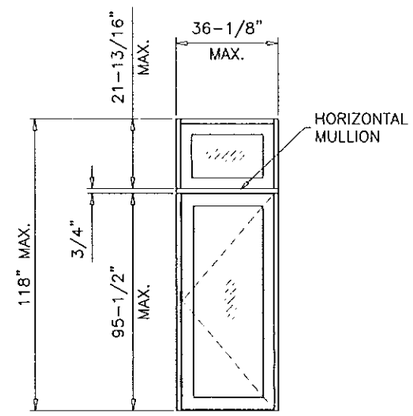

5-9/16" LVL

MAXIMUM DESIGN LOAD RATING = + 62.0 PSF
(FOR SIZE 36-1/8" OR SMALLER) – 77.0 PSF

7-9/16" LVL

MAXIMUM DESIGN LOAD RATING = + 65.0 PSF
(FOR SIZE 36-1/8" OR SMALLER) – 77.0 PSF

PRODUCT RENEWED
as complying with the Florida
Building Code
Acceptance No 14-0610.05
Expiration Date 06/19/2018
By
Miami Dade Product Control

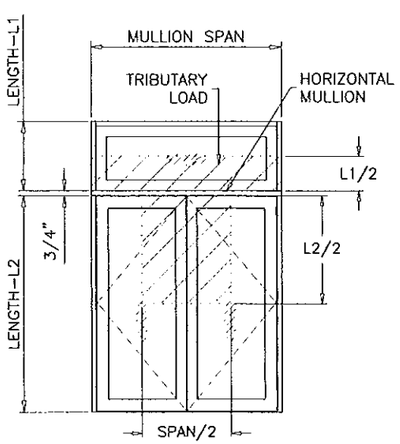

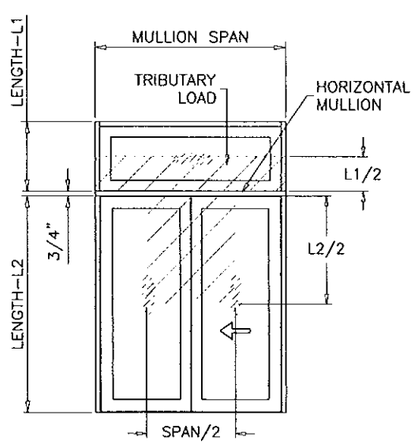

5-9/16" & 7-9/16" LVL

NOTE:
SETTING BLOCKS FOR TRANSOM MUST BE AT 6" FROM EACH END.

Engr: JAVAD AHMAD
CIVIL
FLA. PE # 70592
C.A.N. 3538

SEP 22 2014

AL-FAROOQ CORPORATION
ENGINEERS & PRODUCT DEVELOPMENT
1235 S.W. 87 AVE
MIAMI, FLORIDA 33174
TEL. (305) 264-8100 FAX. (305) 262-6978

MULLION\W01-02AC

LAMINATED VENEERED LUMBER MULLION SYSTEM

ANDERSEN CORPORATION
100 FOURTH AVE. NORTH
BAYPORT, MN. 55003-1096
TEL. (800) 426-7691 FAX (-)

revisions:			
no	date	by	description
E	04.19.10		NO CHANGE THIS SHEET
F	01.26.12		NO CHANGE THIS SHEET
G	05.29.14		NO CHANGE THIS SHEET
H	09.18.14		NO CHANGE THIS SHEET

date: 07-31-01
scale: 1/2" = 1"
dr. by: HAMID
chk. by:

drawing no.
M01-02

sheet 3 of 10

CHART #2

DESIGN LOAD CAPACITY – PSF VERTICAL MULLION			
WIDTH (W) INCHES	MULL SPAN INCHES	5-9/16" MULLION	7-9/16" MULLION
24	60	77.0	77.0
27		77.0	77.0
30		77.0	77.0
33		77.0	77.0
36		77.0	77.0
39		77.0	77.0
42		75.4	77.0
45		70.4	77.0
48		66.0	77.0
51		62.1	77.0
54		58.7	77.0
57		55.6	74.1
60		–	70.4
24	66	77.0	77.0
27		77.0	77.0
30		77.0	77.0
33		77.0	77.0
36		77.0	77.0
39		73.9	77.0
42		68.6	77.0
45		64.0	77.0
48		60.0	77.0
51		56.5	75.3
54		–	71.1
57		–	67.4
60		–	64.0
24	72	77.0	77.0
27		77.0	77.0
30		77.0	77.0
33		77.0	77.0
36		73.3	77.0
39		67.7	77.0
42		62.9	77.0
45		58.7	77.0
48		55.0	73.3
51		–	69.0
54		–	65.2
57		–	61.8
60		–	58.7
24	78	77.0	77.0
27		77.0	77.0
30		77.0	77.0
33		73.8	77.0
36		67.7	77.0
39		62.5	77.0
42		58.0	72.8
45		–	68.0
48		–	63.7
51		–	60.0
54		–	56.6

DESIGN LOAD CAPACITY – PSF VERTICAL MULLION			
WIDTH (W) INCHES	MULL SPAN INCHES	5-9/16" MULLION	7-9/16" MULLION
24	84	77.0	77.0
27		77.0	77.0
30		70.8	77.0
33		64.3	77.0
36		59.0	73.3
39		54.4	67.6
42		–	62.8
45		–	58.6
48		–	54.9
51		–	51.7
24	90	77.0	77.0
27		68.5	77.0
30		61.6	76.6
33		56.0	69.6
36		51.4	63.8
39		–	58.9
42		–	54.7
45		–	51.1
48		–	47.9
24	95-1/2"	64.7	77.0
27		57.5	74.8
30		51.8	67.3
33		47.1	61.2
36		43.2	56.1
39		–	51.8
42		–	48.1
45		–	44.9
24	102	–	74.5
27		–	66.2
30		–	59.6
33		–	54.2
36		–	49.7
39		–	45.9
42		–	42.6
24	108	–	66.5
27		–	59.1
30		–	53.2
33		–	48.3
36		–	44.3
39		–	40.9
24	114	–	59.7
27		–	53.0
30		–	47.7
33		–	43.4
36		–	39.8
24	118	–	55.7
27		–	49.5
30		–	44.6
33		–	40.5
36		–	37.1

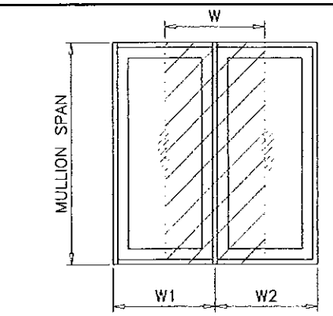

$$\text{WIDTH (W)} = \frac{W1 + W2}{2}$$

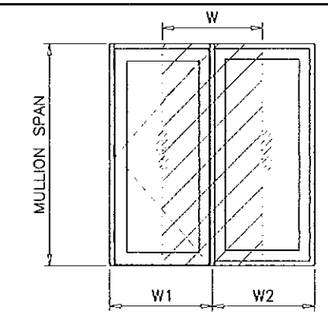

$$\text{WIDTH (W)} = \frac{W1 + W2}{2}$$

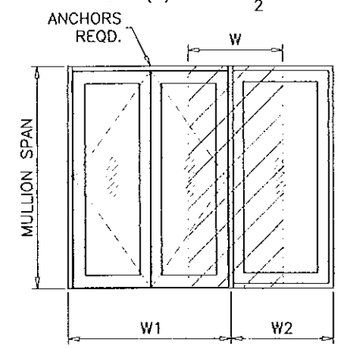

$$\text{WIDTH (W)} = \frac{W1}{4} + \frac{W2}{2}$$

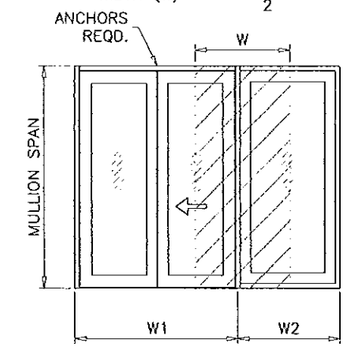

$$\text{WIDTH (W)} = \frac{W1}{4} + \frac{W2}{2}$$

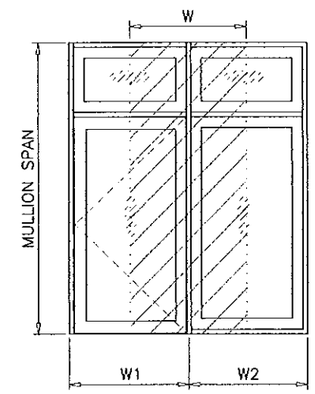

$$\text{WIDTH (W)} = \frac{W1 + W2}{2}$$

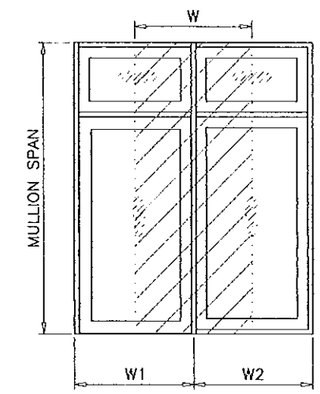

$$\text{WIDTH (W)} = \frac{W1 + W2}{2}$$

5-9/16" LVL
7-9/16" LVL

PRODUCT RENEWED
as complying with the Florida
Building Code
Acceptance No 14-0610.05
Expiration Date 2/19/2018
By
Miami Dade Product Control

SEE SEPARATE NOA'S FOR DOOR AND WINDOW ANCHORS

Eng.: JAVAD AHMAD
CIVIL
FLA. PE # 70592
C.A.N. 3538

SEP 22 2014

AL-FAROOQ CORPORATION
ENGINEERS & PRODUCT DEVELOPMENT
1235 S.W. 87 AVE
MIAMI, FLORIDA 33174
TEL. (305) 264-8100 FAX. (305) 262-6978

MULLION\W01-02AC

LAMINATED VENEERED LUMBER MULLION SYSTEM

ANDERSEN CORPORATION
100 FOURTH AVE. NORTH
BAYPORT, MN. 55003-1096
TEL. (800) 426-7691 FAX (-)

revisions:

no	date	by	description
E	04.19.10		UPDATED TO 2007 FBC
F	01.26.12		NO CHANGE THIS SHEET
G	05.29.14		NO CHANGE THIS SHEET
H	09.18.14		NO CHANGE THIS SHEET

date: 07-31-01
scale: 1/2" = 1"
dr. by: HAMID
chk. by:

drawing no.
M01-02

CHART #3

DESIGN LOAD CAPACITY – PSF VERTICAL MULLION				
WIDTH–W1 INCHES	WIDTH–W2 INCHES	LENGTH–A INCHES	LENGTH–L INCHES	7–9/16" MULLION
48–3/4"	14–13/16"	80	102	70.0
	18–13/16"			65.0
	24–1/2"			58.9
	30–1/8"			54.0
	32–1/8"			52.4
	36–1/8"			49.5
60"	14–13/16"			60.2
	18–13/16"			56.5
	24–1/2"			51.9
	30–1/8"			48.0
	32–1/8"			46.8
	36–1/8"			44.5
64"	14–13/16"			57.4
	18–13/16"			54.0
	24–1/2"			49.8
	30–1/8"			46.2
	32–1/8"			45.1
72"	14–13/16"			52.4
	18–13/16"			49.6
	24–1/2"			46.0
48–3/4"	14–13/16"	80	104–7/8	64.7
	18–13/16"			60.2
	24–1/2"			54.7
	30–1/8"			50.2
	32–1/8"			48.8
	36–1/8"			46.1
60"	14–13/16"			55.6
	18–13/16"			52.2
	24–1/2"			48.1
	30–1/8"			44.6
	32–1/8"			43.4
64"	14–13/16"			52.9
	18–13/16"			49.9
	24–1/2"			46.1
	30–1/8"			42.9
	32–1/8"			41.8
72"	14–13/16"			48.3
	18–13/16"			45.8
	24–1/2"			42.6
48–3/4"	14–13/16"	80	112	53.9
	18–13/16"			50.3
	24–1/2"			46.0
	30–1/8"			42.4
	32–1/8"			41.2
	36–1/8"			39.1
60"	14–13/16"			46.2
	18–13/16"			43.5
	24–1/2"			40.3
	30–1/8"			37.5
64"	14–13/16"			43.9
	18–13/16"			41.5
	24–1/2"			38.5
72"	14–13/16"			40.0
	18–13/16"			38.0

DESIGN LOAD CAPACITY – PSF VERTICAL MULLION				
WIDTH–W1 INCHES	WIDTH–W2 INCHES	LENGTH–A INCHES	LENGTH–L INCHES	7–9/16" MULLION
48–3/4"	14–13/16"	80	118	46.8
	18–13/16"			43.8
	24–1/2"			40.2
	30–1/8"			37.1
	32–1/8"			36.1
60"	14–13/16"			40.0
	18–13/16"			37.8
	24–1/2"			35.1
64"	14–13/16"			38.0
	18–13/16"			36.0
72"	14–13/16"			34.6

SEE SEPARATE NOA'S FOR DOOR AND WINDOW ANCHORS

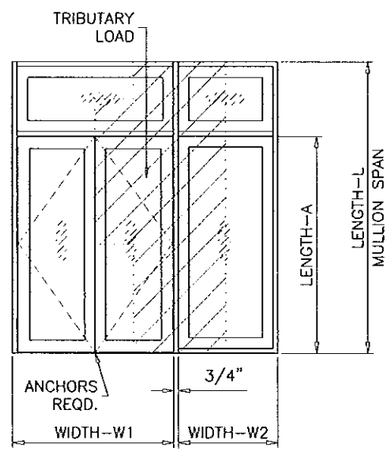

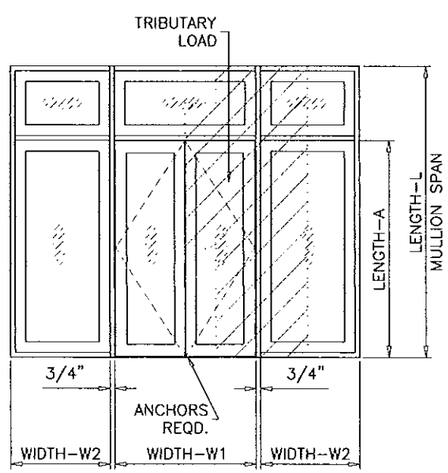

7–9/16" LVL

CHART #3

DESIGN LOAD CAPACITY – PSF VERTICAL MULLION				
WIDTH–W1 INCHES	WIDTH–W2 INCHES	LENGTH–A INCHES	LENGTH–L INCHES	7–9/16" MULLION
48–3/4"	14–13/16"	82–1/2	102	71.9
	18–13/16"			66.6
	24–1/2"			60.3
	30–1/8"			55.1
	32–1/8"			53.4
	36–1/8"			50.5
60"	14–13/16"			61.8
	18–13/16"			58.0
	24–1/2"			53.2
	30–1/8"			49.1
	32–1/8"			47.8
	36–1/8"			45.4
64"	14–13/16"			59.1
	18–13/16"			55.5
	24–1/2"			51.0
	30–1/8"			47.3
	32–1/8"			46.1
72"	14–13/16"			54.0
	18–13/16"			51.0
	24–1/2"			47.2
48–3/4"	14–13/16"	82–1/2	104–7/8	66.3
	18–13/16"			61.6
	24–1/2"			55.9
	30–1/8"			51.2
	32–1/8"			49.7
	36–1/8"			47.0
60"	14–13/16"			57.1
	18–13/16"			53.6
	24–1/2"			49.2
	30–1/8"			45.5
	32–1/8"			44.4
64"	14–13/16"			54.4
	18–13/16"			51.2
	24–1/2"			47.2
	30–1/8"			43.8
	32–1/8"			42.7
72"	14–13/16"			49.7
	18–13/16"			47.0
	24–1/2"			43.6
48–3/4"	14–13/16"	82–1/2	112	55.2
	18–13/16"			51.4
	24–1/2"			46.9
	30–1/8"			43.1
	32–1/8"			41.9
	36–1/8"			39.7
60"	14–13/16"			47.3
	18–13/16"			44.5
	24–1/2"			41.1
	30–1/8"			38.2
64"	14–13/16"			45.0
	18–13/16"			42.5
	24–1/2"			39.4
72"	14–13/16"			41.1
	18–13/16"			39.0

DESIGN LOAD CAPACITY – PSF VERTICAL MULLION				
WIDTH–W1 INCHES	WIDTH–W2 INCHES	LENGTH–A INCHES	LENGTH–L INCHES	7–9/16" MULLION
48–3/4"	14–13/16"	82–1/2	118	47.8
	18–13/16"			44.7
	24–1/2"			40.9
	30–1/8"			37.7
	32–1/8"			36.7
60"	14–13/16"			40.9
	18–13/16"			38.6
	24–1/2"			35.8
64"	14–13/16"			38.9
	18–13/16"			36.8
72"	14–13/16"			35.4

PRODUCT RENEWED
as complying with the Florida
Building Code
Acceptance No 14-0610.05
Expiration Date 06/19/2018
By
Miami Dade Product Control

Engr: JAVAD AHMAD
CIVIL
FLA. PE # 70592
C.A.N. 3538

SEP 22 2014

AL-FAROOQ CORPORATION
ENGINEERS & PRODUCT DEVELOPMENT
1235 S.W. 87 AVE
MIAMI, FLORIDA 33174
TEL. (305) 264-8100 FAX. (305) 262-6978

MULLION\W01–02AC

LAMINATED VENEERED LUMBER MULLION SYSTEM

ANDERSEN CORPORATION
100 FOURTH AVE. NORTH
BAYPORT, MN. 55003–1096
TEL. (800) 426-7691 FAX (–)

revisions:			
no	date	by	description
E	04.19.10		NO CHANGE THIS SHEET
F	01.26.12		NO CHANGE THIS SHEET
G	05.29.14		NO CHANGE THIS SHEET
H	09.18.14		NO CHANGE THIS SHEET

date: 07–31–01
scale: 1/2" = 1"
dr. by: HAMID
chk. by:

drawing no.
M01–02

sheet 5 of 10

CHART #3

DESIGN LOAD CAPACITY – PSF VERTICAL MULLION				
WIDTH-W1 INCHES	WIDTH-W2 INCHES	LENGTH-A INCHES	LENGTH-L INCHES	7-9/16" MULLION
48-3/4"	14-13/16"	90	102	77.0
	18-13/16"			71.8
	24-1/2"			64.5
	30-1/8"			58.6
	32-1/8"			56.7
	36-1/8"			53.3
60"	14-13/16"			67.7
	18-13/16"			62.9
	24-1/2"			57.2
	30-1/8"			52.5
	32-1/8"			51.0
	36-1/8"			48.3
64"	14-13/16"			64.6
	18-13/16"			60.3
	24-1/2"			55.0
	30-1/8"			50.7
	32-1/8"			49.3
72"	14-13/16"			59.3
	18-13/16"			55.6
	24-1/2"			51.1
48-3/4"	14-13/16"	90	104-7/8	71.8
	18-13/16"			66.2
	24-1/2"			59.6
	30-1/8"			54.3
	32-1/8"			52.6
	36-1/8"			49.5
60"	14-13/16"			62.1
	18-13/16"			57.9
	24-1/2"			52.8
	30-1/8"			48.6
	32-1/8"			47.2
64"	14-13/16"			59.3
	18-13/16"			55.5
	24-1/2"			50.8
	30-1/8"			46.8
	32-1/8"			45.6
72"	14-13/16"			54.4
	18-13/16"			51.1
	24-1/2"			47.1
48-3/4"	14-13/16"	90	112	59.3
	18-13/16"			54.9
	24-1/2"			49.7
	30-1/8"			45.5
	32-1/8"			44.2
	36-1/8"			41.7
60"	14-13/16"			51.1
	18-13/16"			47.8
	24-1/2"			43.9
	30-1/8"			40.5
64"	14-13/16"			48.7
	18-13/16"			45.7
	24-1/2"			42.1
72"	14-13/16"			44.5
	18-13/16"			42.0

DESIGN LOAD CAPACITY – PSF VERTICAL MULLION				
WIDTH-W1 INCHES	WIDTH-W2 INCHES	LENGTH-A INCHES	LENGTH-L INCHES	7-9/16" MULLION
48-3/4"	14-13/16"	90	118	51.1
	18-13/16"			47.5
	24-1/2"			43.2
	30-1/8"			39.7
	32-1/8"			38.5
60"	14-13/16"			43.9
	18-13/16"			41.2
	24-1/2"			38.0
64"	14-13/16"			41.8
	18-13/16"			39.4
72"	14-13/16"			38.2

SEE SEPARATE NOA'S FOR DOOR AND WINDOW ANCHORS

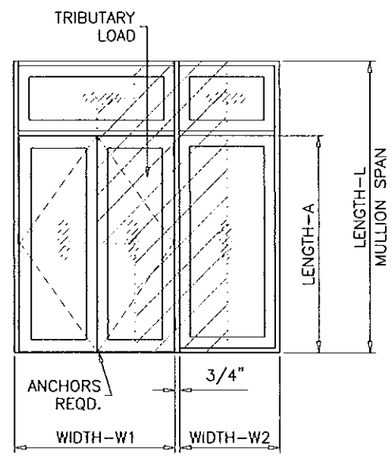

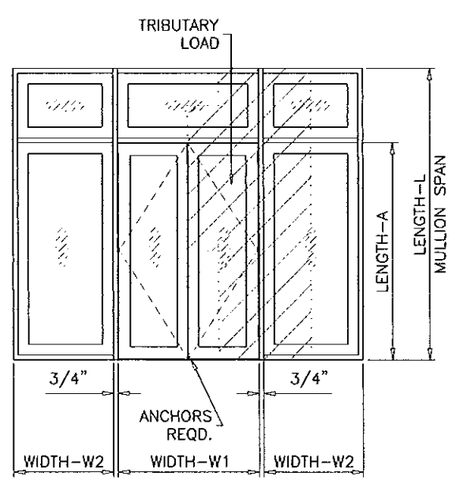

7-9/16" LVL

CHART #3

DESIGN LOAD CAPACITY – PSF VERTICAL MULLION				
WIDTH-W1 INCHES	WIDTH-W2 INCHES	LENGTH-A INCHES	LENGTH-L INCHES	7-9/16" MULLION
48-3/4"	14-13/16"	96	102	77.0
	18-13/16"			74.3
	24-1/2"			68.1
	30-1/8"			61.5
	32-1/8"			59.5
	36-1/8"			55.8
60"	14-13/16"			67.3
	18-13/16"			63.8
	24-1/2"			59.4
	30-1/8"			55.5
	32-1/8"			53.8
	36-1/8"			50.8
64"	14-13/16"			64.0
	18-13/16"			60.8
	24-1/2"			56.9
	30-1/8"			53.5
	32-1/8"			52.1
72"	14-13/16"			58.1
	18-13/16"			55.6
	24-1/2"			52.2
48-3/4"	14-13/16"	96	104-7/8	76.6
	18-13/16"			70.3
	24-1/2"			62.9
	30-1/8"			56.9
	32-1/8"			55.1
	36-1/8"			51.7
60"	14-13/16"			66.1
	18-13/16"			61.8
	24-1/2"			56.0
	30-1/8"			51.3
	32-1/8"			49.8
64"	14-13/16"			62.9
	18-13/16"			59.3
	24-1/2"			53.9
	30-1/8"			49.5
	32-1/8"			48.1
72"	14-13/16"			57.2
	18-13/16"			54.7
	24-1/2"			50.2
48-3/4"	14-13/16"	96	112	62.9
	18-13/16"			58.0
	24-1/2"			52.2
	30-1/8"			47.6
	32-1/8"			46.1
	36-1/8"			43.4
60"	14-13/16"			54.4
	18-13/16"			50.7
	24-1/2"			46.3
	30-1/8"			42.6
64"	14-13/16"			51.9
	18-13/16"			48.6
	24-1/2"			44.5
72"	14-13/16"			47.6
	18-13/16"			44.7

DESIGN LOAD CAPACITY – PSF VERTICAL MULLION				
WIDTH-W1 INCHES	WIDTH-W2 INCHES	LENGTH-A INCHES	LENGTH-L INCHES	7-9/16" MULLION
48-3/4"	14-13/16"	96	118	54.0
	18-13/16"			50.0
	24-1/2"			45.2
	30-1/8"			41.3
	32-1/8"			40.1
60"	14-13/16"			46.5
	18-13/16"			43.6
	24-1/2"			39.9
64"	14-13/16"			44.4
	18-13/16"			41.7
72"	14-13/16"			40.6

PRODUCT RENEWED
as complying with the Florida
Building Code
Acceptance No 14-0610.05
Expiration Date 06/19/2018
By
Miami Dade Product Control

Engr: JAVAD AHMAD
CIVIL
FLA. PE # 70592
C.A.N. 3538

SEP 22 2014

AL-FAROOQ CORPORATION
ENGINEERS & PRODUCT DEVELOPMENT
1235 S.W. 87 AVE
MIAMI, FLORIDA 33174
TEL. (305) 264-8100 FAX. (305) 262-6978

MULLION\W01-02AC

LAMINATED VENEERED LUMBER MULLION SYSTEM

ANDERSEN CORPORATION
100 FOURTH AVE. NORTH
BAYPORT, MN. 55003-1096
TEL. (800) 426-7691 FAX (-)

revisions:

no.	date	by	description
E	04.19.10		UPDATED TO 2007 FBC
F	01.26.12		NO CHANGE THIS SHEET
G	05.29.14		NO CHANGE THIS SHEET
H	09.18.14		NO CHANGE THIS SHEET

date: 07-31-01
scale: 1/2" = 1"
dr. by: HAMID
chk. by:

drawing no.
M01-02

sheet 6 of 10

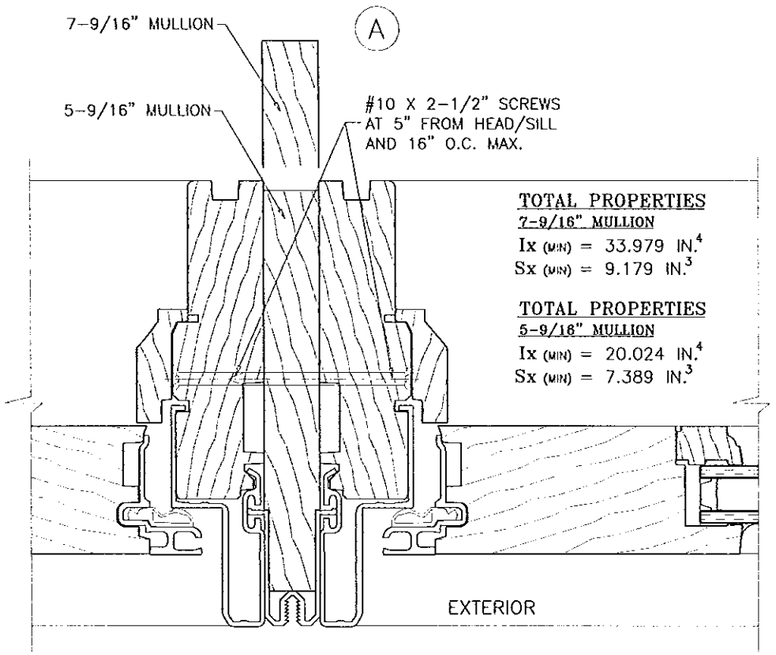

5-9/16" & 7-9/16" VERTICAL MULLIONS CAN BE USED IN ANY COMBINATIONS OF FRAME JAMBS OF OUTSWING/INSWING DOORS, GLIDING DOORS, SIDELITES AND TRANSOMS, SEE SHEET 2 FOR DETAILS.

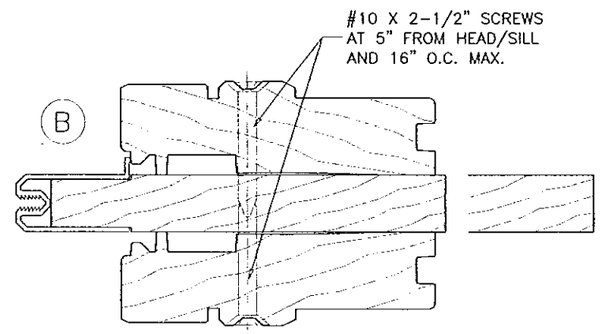

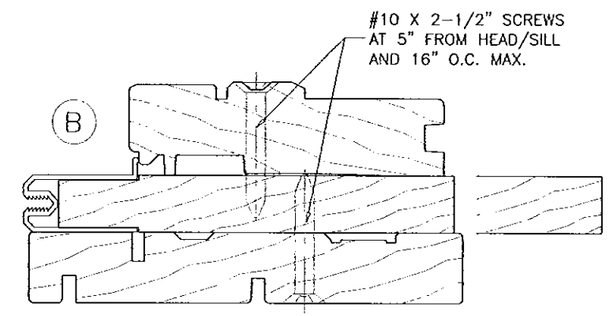

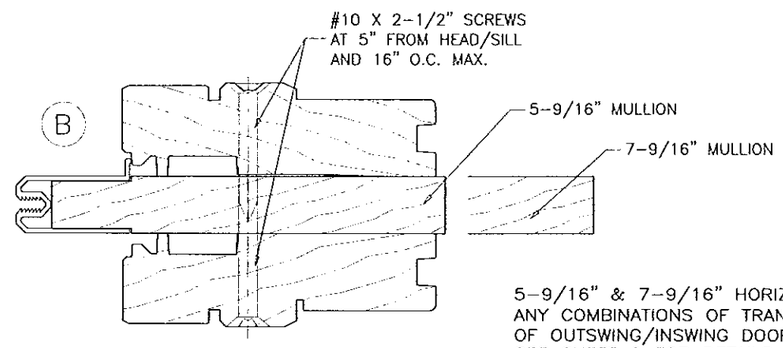

TOTAL PROPERTIES
7-9/16" MULLION
Ix (MIN) = 34.059 IN.4
Sx (MIN) = 9.200 IN.3

TOTAL PROPERTIES
5-9/16" MULLION
Ix (MIN) = 20.104 IN.4
Sx (MIN) = 7.418 IN.3

5-9/16" & 7-9/16" HORIZONTAL MULLIONS CAN BE USED IN ANY COMBINATIONS OF TRANSOM FRAMES WITH FRAME HEADS OF OUTSWING/INSWING DOORS, GLIDING DOORS AND SIDELITES SEE SHEET 2 FOR DETAILS.

HEADER

5-9/16" & 7-9/16" LVL

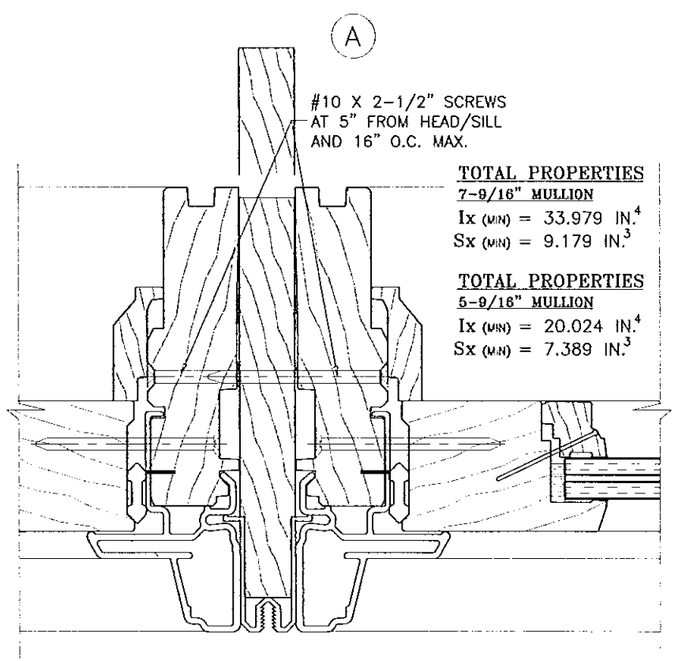

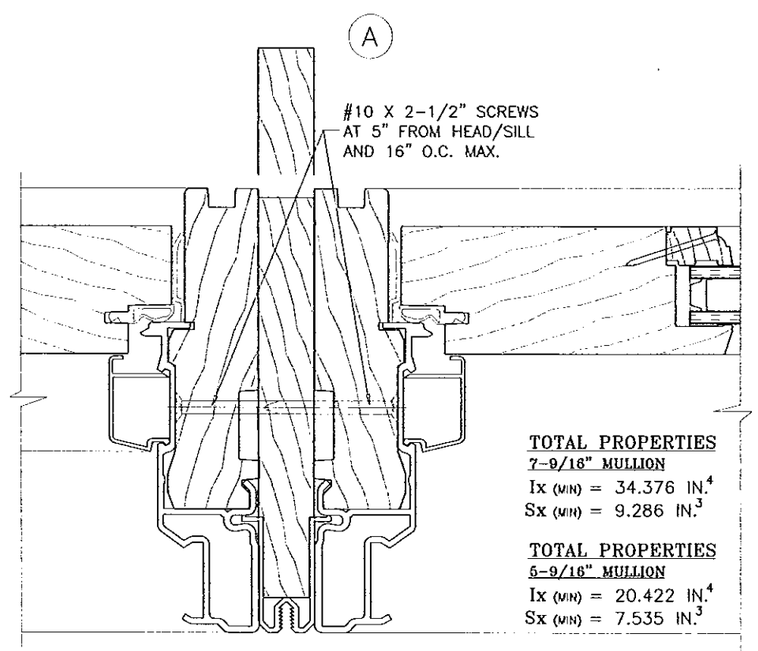

PRODUCT RENEWED
as complying with the Florida
Building Code
Acceptance No 14-0610.05
Expiration Date 06/19/2018
By
Miami Dade Product Control

Engr: JAVAD AHMAD
CIVIL
FLA. PE # 70592
C.A.N. 3538

SEP 22 2014

AL-FAROOQ CORPORATION
ENGINEERS & PRODUCT DEVELOPMENT
1235 S.W. 87 AVE
MIAMI, FLORIDA 33174
TEL. (305) 264-8100 FAX. (305) 262-6978

MULLION\W01-02AC

LAMINATED VENEERED LUMBER MULLION SYSTEM

ANDERSEN CORPORATION
100 FOURTH AVE. NORTH
BAYPORT, MN. 55003-1096
TEL. (800) 426-7691 FAX (-)

revisions:

no	date	by	description
E	04.19.10		NO CHANGE THIS SHEET
F	01.26.12		NO CHANGE THIS SHEET
G	05.29.14		NO CHANGE THIS SHEET
H	09.18.14		NO CHANGE THIS SHEET

date: 07-31-01
scale: 1/2" = 1"
dr. by: HAMID
chk. by:

drawing no.
M01-02

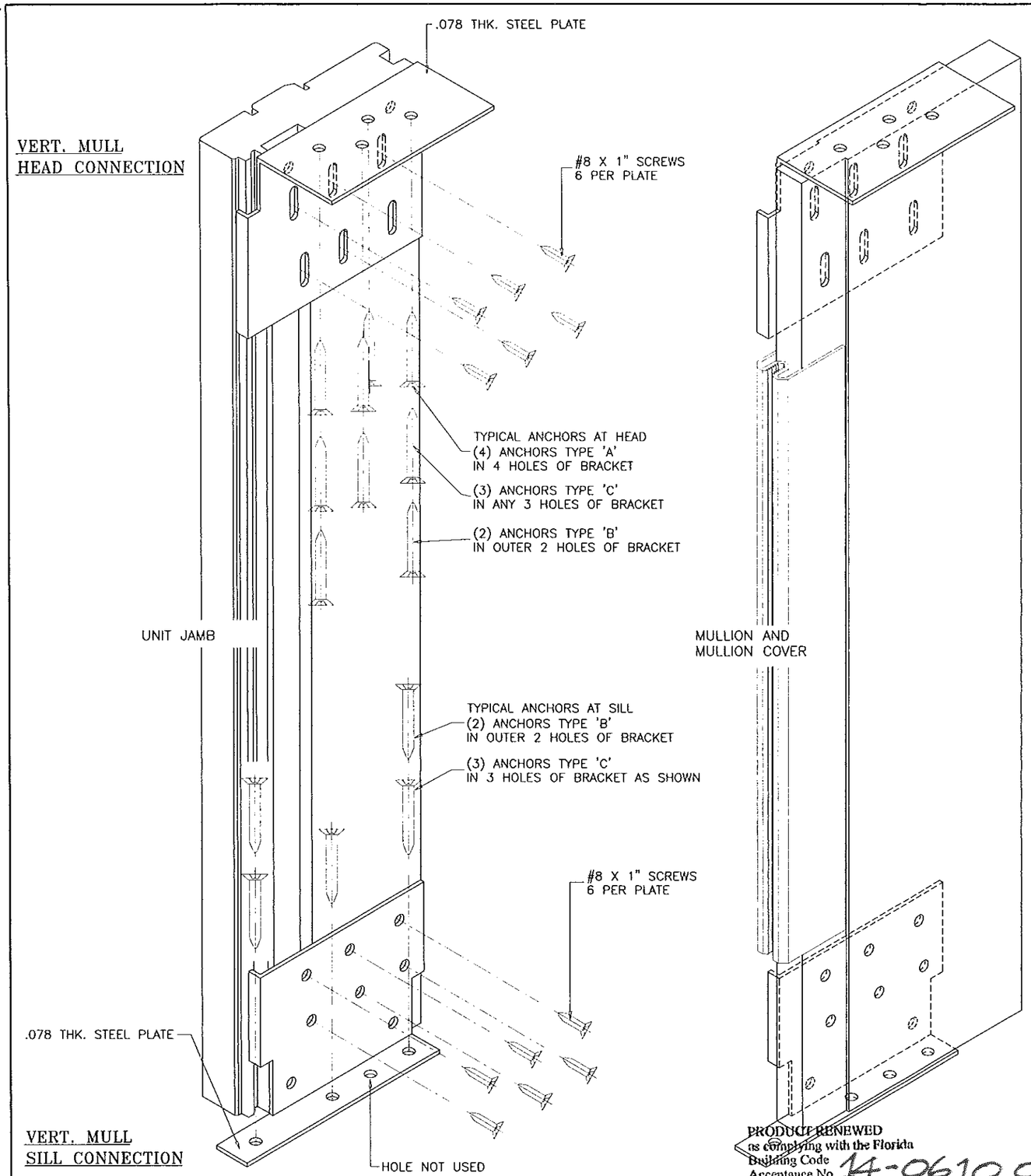

5-9/16" MULLION
CONNECTION DETAIL

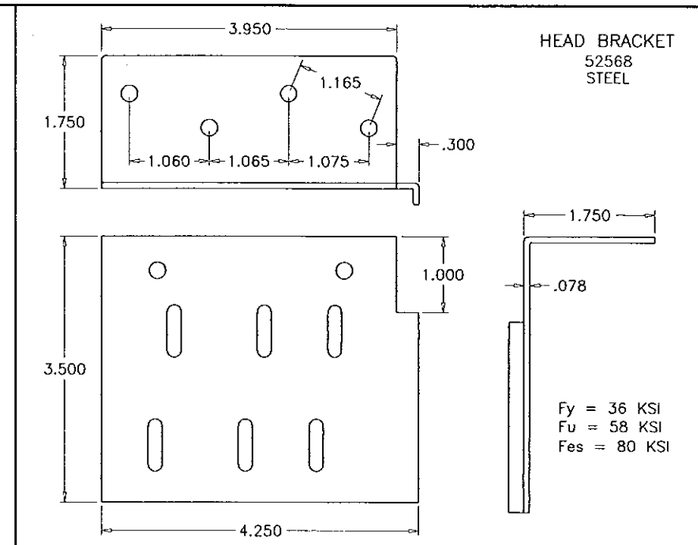

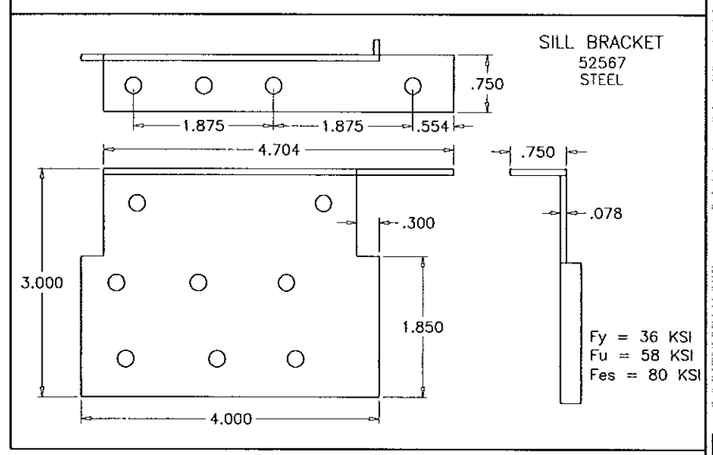

TYPICAL ANCHORS: SEE ELEV. FOR SPACING

TYPE 'A'– **1/4" DIA. ULTRACON BY 'ELCO'** (Fu=177 KSI, Fy=155 KSI)
INTO 2BY WOOD BUCKS OR WOOD STRUCTURES
1-1/2" MIN. PENETRATION INTO WOOD

TYPE 'B'– **1/4" DIA. ULTRACON BY 'ELCO'** (Fu=177 KSI, Fy=155 KSI)
DIRECTLY INTO CONC. OR MASONRY
1-3/4" MIN. EMBED INTO CONCRETE
1-1/4" MIN. EMBED INTO MASONRY

TYPE 'C'– **#12 SMS OR SELF DRILLING SCREWS** (GRADE 2 CRS)
INTO METAL STRUCTURES
STEEL : 12 GA. MIN. (Fy = 36 KSI MIN.)
ALUMINUM : 1/8" THK. MIN. (6063-T5 MIN.)
(STEEL IN CONTACT WITH ALUMINUM TO BE PLATED OR PAINTED)

TYPICAL EDGE DISTANCE
INTO CONCRETE = 2-1/2" MIN.
INTO MASONRY = 2" MIN.
INTO WOOD STRUCTURE = 1" MIN.
INTO METAL STRUCTURE = 3/4" MIN.

ANCHORS CL TO CL DISTANCES
INTO CONCRETE AND MASONRY = 3" MIN.
INTO WOOD STRUCTURE = 3/4" MIN.
INTO METAL STRUCTURE = 3/4" MIN.

CONCRETE AT HEAD, SILL OR JAMBS f'c = 3000 PSI MIN.
C-90 HOLLOW/FILLED BLOCK AT JAMBS f'm = 2000 PSI MIN.

PRODUCT RENEWED
as complying with the Florida
Building Code
Acceptance No 14-0610.05
Expiration Date 06/19/2018
By
Miami Dade Product Control

Engr: JAVAD AHMAD
CIVIL
FLA. PE # 70592
C.A.N. 3538

SEP 22 2014

AL-FAROOQ CORPORATION
ENGINEERS & PRODUCT DEVELOPMENT
1235 S.W. 87 AVE
MIAMI, FLORIDA 33174
TEL. (305) 264-8100 FAX. (305) 262-6978

MULLION\W01-02AC

LAMINATED VENEERED LUMBER MULLION SYSTEM

ANDERSEN CORPORATION
100 FOURTH AVE. NORTH
BAYPORT, MN. 55003-1096
TEL. (800) 426-7691 FAX (-)

revisions:

no	date	by	description
E	04.19.10		UPDATED TO 2007 FBC
F	01.26.12		NO CHANGE THIS SHEET
G	05.29.14		UPDATED TO 2014 FBC
H	09.18.14		NO CHANGE THIS SHEET

date: 07-31-01
scale: 1/2" = 1"
dr. by: HAMID
chk. by:

drawing no.
M01-02

VERT. MULL
HEAD CONNECTION

HORIZ. MULL
JAMB CONNECTION

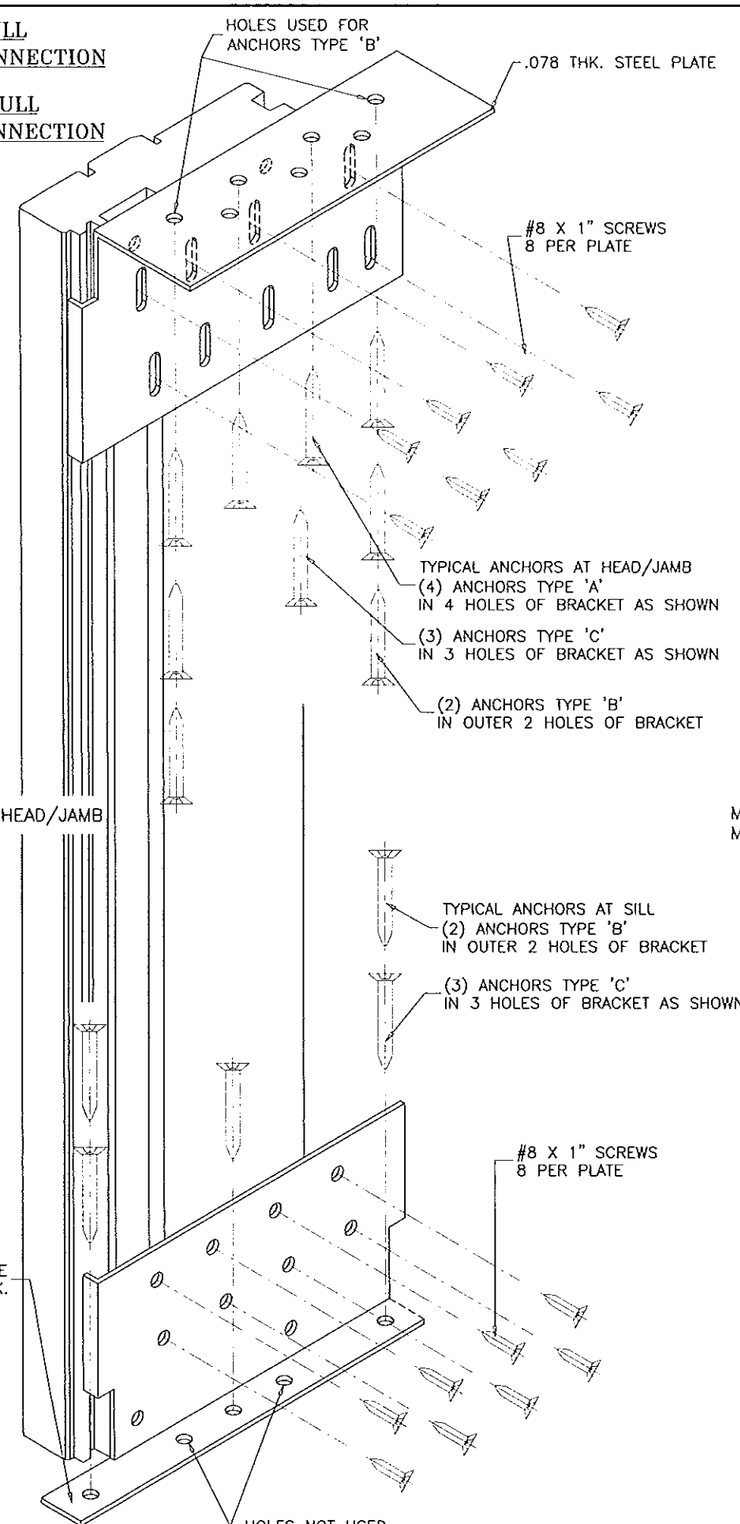

VERT. MULL
SILL CONNECTION

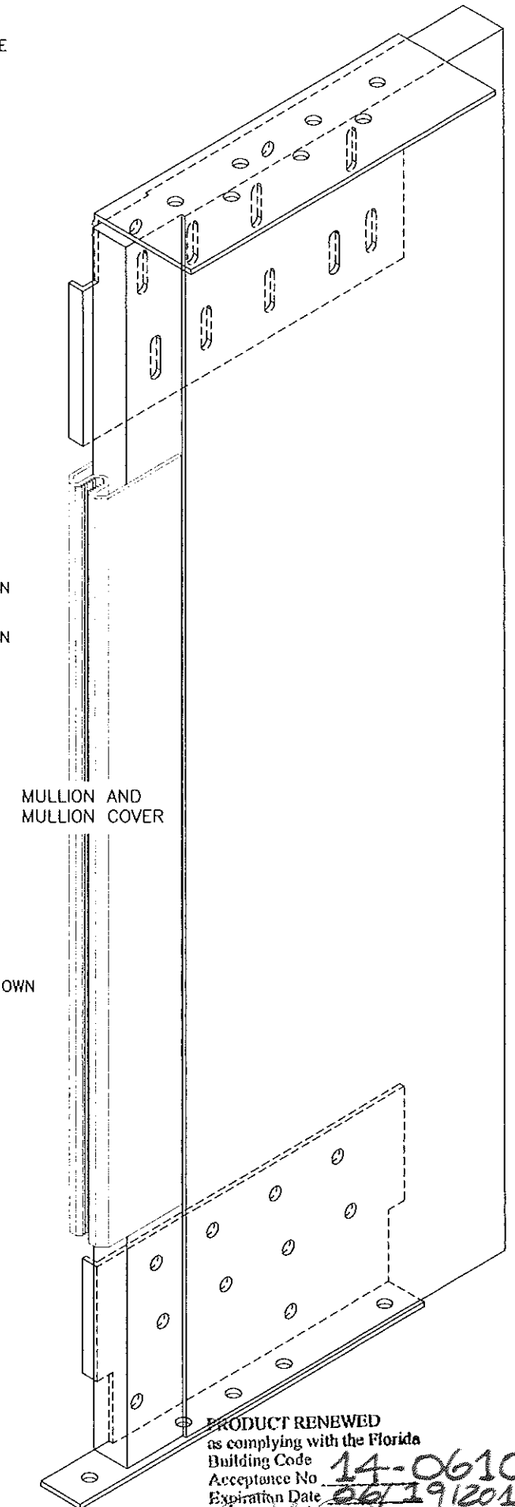

7-9/16" MULLION
CONNECTION DETAIL

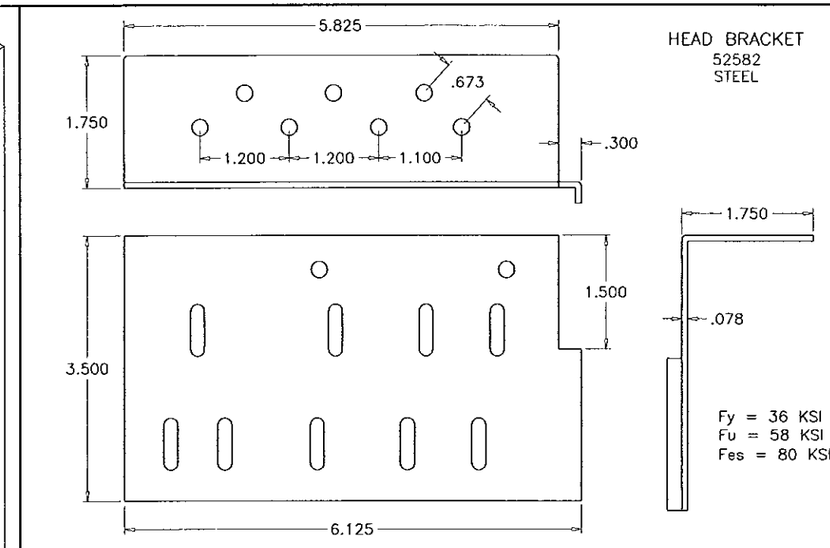

HEAD BRACKET
52582
STEEL

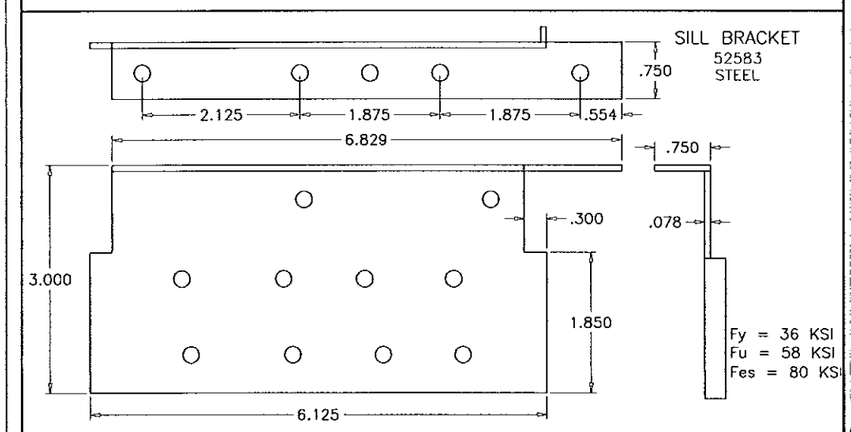

SILL BRACKET
52583
STEEL

TYPICAL ANCHORS: SEE ELEV. FOR SPACING

TYPE 'A'– 1/4" DIA. ULTRACON BY 'ELCO' (Fu=177 KSI, Fy=155 KSI)
INTO 2BY WOOD BUCKS OR WOOD STRUCTURES
1-1/2" MIN. PENETRATION INTO WOOD

TYPE 'B'– 1/4" DIA. ULTRACON BY 'ELCO' (Fu=177 KSI, Fy=155 KSI)
DIRECTLY INTO CONC. OR MASONRY
1-3/4" MIN. EMBED INTO CONCRETE
1-1/4" MIN. EMBED INTO MASONRY

TYPE 'C'– #12 SMS OR SELF DRILLING SCREWS (GRADE 2 CRS)
INTO METAL STRUCTURES
STEEL : 12 GA. MIN. (Fy = 36 KSI MIN.)
ALUMINUM : 1/8" THK. MIN. (6063-T5 MIN.)
(STEEL IN CONTACT WITH ALUMINUM TO BE PLATED OR PAINTED)

TYPICAL EDGE DISTANCE
INTO CONCRETE = 2-1/2" MIN.
INTO MASONRY = 2" MIN.
INTO WOOD STRUCTURE = 1" MIN.
INTO METAL STRUCTURE = 3/4" MIN.

ANCHORS CL TO CL DISTANCES
INTO CONCRETE AND MASONRY = 3" MIN.
INTO WOOD STRUCTURE = 3/4" MIN.
INTO METAL STRUCTURE = 3/4" MIN.

CONCRETE AT HEAD, SILL OR JAMBS f'c = 3000 PSI MIN.
C-90 HOLLOW/FILLED BLOCK AT JAMBS f'm = 2000 PSI MIN.

PRODUCT RENEWED
as complying with the Florida
Building Code
Acceptance No. 14-0610.05
Expiration Date 06/19/2018
By
Miami Dade Product Control

Engr: JAVAD AHMAD
CIVIL
FLA. PE # 70592
C.A.N. 3538

SEP 22 2014

AL-FAROOQ CORPORATION
ENGINEERS & PRODUCT DEVELOPMENT
1235 S.W. 87 AVE
MIAMI, FLORIDA 33174
TEL. (305) 264-8100 FAX. (305) 262-6978

MULLION\W01-02AC

LAMINATED VENEERED LUMBER MULLION SYSTEM

ANDERSEN CORPORATION
100 FOURTH AVE. NORTH
BAYPORT, MN. 55003-1096
TEL. (800) 426-7691 FAX (-)

revisions:

no.	date	by	description
E	04.19.10		UPDATED TO 2007 FBC
F	01.26.12		NO CHANGE THIS SHEET
G	05.29.14		UPDATED TO 2014 FBC
H	09.18.14		NO CHANGE THIS SHEET

date: 07-31-01
scale: 1/2" = 1"
dr. by: HAMID
chk. by:

drawing no.
M01-02

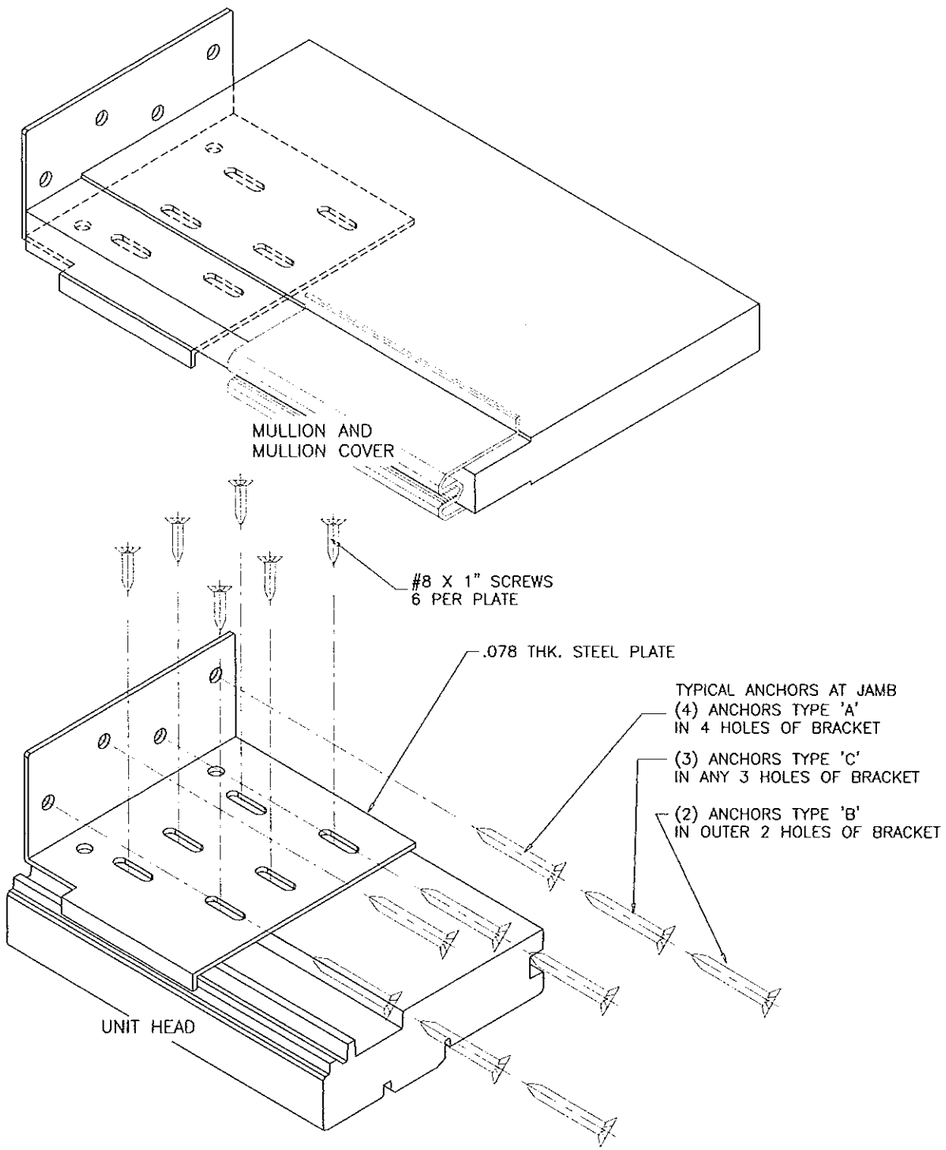

5-9/16" HORIZONTAL MULLION CONNECTION AT JAMB SHOWN.
MULLIONS CONNECTIONS AT HEAD AND JAMBS ARE SIMILAR.
FOR 7-9/16" HORIZONTAL MULLION CONNECTION SEE HEAD/JAMB DETAIL AT SHEET 9.

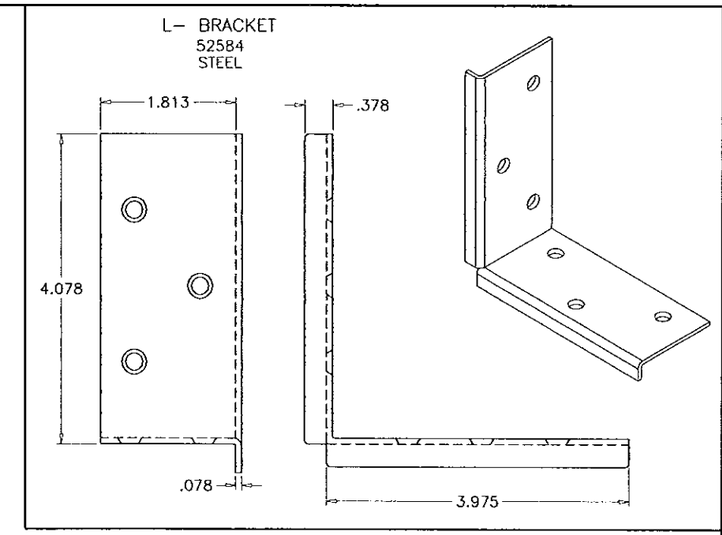

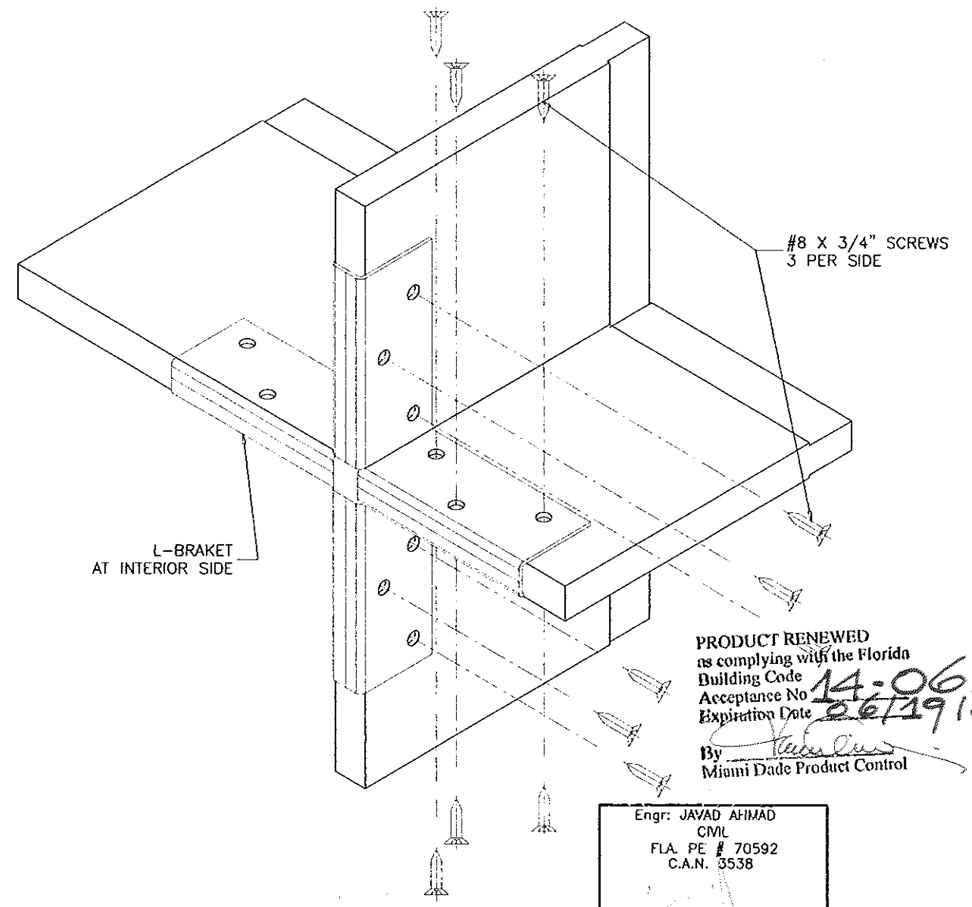

VERT. MULLION CONNECTION
TO HORIZONTAL MULLION

PRODUCT RENEWED
as complying with the Florida
Building Code
Acceptance No 14-0610.05
Expiration Date 06/19/2018
By
Miami Dade Product Control

Engr: JAVAD AHMAD
CIVIL
FLA. PE # 70592
C.A.N. 3538

SEP 22 2014

AL-FAROOQ CORPORATION
ENGINEERS & PRODUCT DEVELOPMENT
1235 S.W. 87 AVE
MIAMI, FLORIDA 33174
TEL. (305) 264-8100 FAX. (305) 262-6978

MULLION\W01-02AC

LAMINATED VENEERED LUMBER MULLION SYSTEM

ANDERSEN CORPORATION
100 FOURTH AVE. NORTH
BAYPORT, MN. 55003-1096
TEL. (800) 426-7691 FAX (-)

revisions:

no	date	by	description
E	04.19.10		NO CHANGE THIS SHEET
F	01.26.12		NO CHANGE THIS SHEET
G	05.29.14		NO CHANGE THIS SHEET
H	09.18.14		NO CHANGE THIS SHEET

date: 07-31-01
scale: 1/2" = 1"
dr. by: HAMID
chk. by:

drawing no.
M01-02