MIAMI-DADE COUNTY
DEPARTMENT OF REGULATORY AND ECONOMIC RESOURCES (RER)
BOARD AND CODE ADMINISTRATION DIVISION

MIAMI-DADE COUNTY
PRODUCT CONTROL SECTION
11805 SW 26 Street, Room 208
T (786) 315-2590 F (786) 315-2599
www.miamidade.gov/economy

NOTICE OF ACCEPTANCE (NOA)

Harmon, Inc.
911 Meridian Way
West Chester, OH 45069

SCOPE:

This NOA is being issued under the applicable rules and regulations governing the use of construction materials. The documentation submitted has been reviewed and accepted by Miami-Dade County RER - Product Control Section to be used in Miami Dade County and other areas where allowed by the Authority Having Jurisdiction (AHJ).

This NOA shall not be valid after the expiration date stated below. The Miami-Dade County Product Control Section (In Miami Dade County) and/or the AHJ (in areas other than Miami Dade County) reserve the right to have this product or material tested for quality assurance purposes. If this product or material fails to perform in the accepted manner, the manufacturer will incur the expense of such testing and the AHJ may immediately revoke, modify, or suspend the use of such product or material within their jurisdiction. RER reserves the right to revoke this acceptance, if it is determined by Miami-Dade County Product Control Section that this product or material fails to meet the requirements of the applicable building code.

This product is approved as described herein, and has been designed to comply with the Florida Building Code, including the High Velocity Hurricane Zone.

DESCRIPTION: Series "HI 7000" Pressure Plate Glazed, Aluminum Curtain Wall System – L.M.I.

APPROVAL DOCUMENT: Drawing No. **HI7000LM,** titled "Harmon HI 7000 Large Missile – Preglazed & Unitized Pressure Plate Glazing, Aluminum Curtainwall System", sheets 1 through 41 of 41, dated 06/28/04, with revision #5 dated 10/03/14, prepared by manufacturer, signed and sealed by Ethan A. Charpentier, P.E., bearing the Miami-Dade County Product Control Revision stamp with the Notice of Acceptance number and expiration date by the Miami-Dade County Product Control Section.

MISSILE IMPACT RATING: Large Missile Impact Resistant

LABELING: Each unit shall bear a permanent label with the manufacturer's name or logo, city, state, model/series, and following statement: "Miami-Dade County Product Control Approved", unless otherwise noted herein.

RENEWAL of this NOA shall be considered after a renewal application has been filed and there has been no change in the applicable building code negatively affecting the performance of this product.

TERMINATION of this NOA will occur after the expiration date or if there has been a revision or change in the materials, use, and/or manufacture of the product or process. Misuse of this NOA as an endorsement of any product, for sales, advertising or any other purposes shall automatically terminate this NOA. Failure to comply with any section of this NOA shall be cause for termination and removal of NOA.

ADVERTISEMENT: The NOA number preceded by the words Miami-Dade County, Florida, and followed by the expiration date may be displayed in advertising literature. If any portion of the NOA is displayed, then it shall be done in its entirety.

INSPECTION: A copy of this entire NOA shall be provided to the user by the manufacturer or its distributors and shall be available for inspection at the job site at the request of the Building Official.

This NOA **revises and renews NOA# 12-0727.06** and consists of this page 1 and evidence pages E-1, E-2 and E-3, as well as approval document mentioned above.

The submitted documentation was reviewed by **Manuel Perez, P.E.**

MIAMI-DADE COUNTY APPROVED

10/15/14

NOTICE OF ACCEPTANCE: EVIDENCE SUBMITTED

A. DRAWINGS

1. Manufacturer's die drawings and sections.
2. Drawing No. **HI7000LM,** titled "Harmon HI 7000 Large Missile Preglazed & Unitized Pressure Plate Glazing, Aluminum Curtainwall System", sheets 1 through 41 of 41, dated 06/28/04, with revision #5 dated 10/03/14, prepared by manufacturer, signed and sealed by Ethan A. Carpenter, P.E.

B. TESTS

1. Test reports on: 1) Air Infiltration Test, per FBC, TAS 202-94
   2) Uniform Static Air Pressure Test, Loading per FBC, TAS 202-94
   3) Water Resistance Test, per FBC, TAS 202-94
   4) Large Missile Impact Test per FBC, TAS 201-94
   5) Small Missile Impact Test per FBC, TAS 201-94
   6) Cyclic Wind Pressure Loading per FBC, TAS 203-94

   along with marked-up drawings and installation diagram of an aluminum unitized window wall system, prepared by Hurricane Test Laboratory, Inc., Test Report No. **HTL-0319-0509-06**, dated 08/15/08, signed and sealed by Vinu J. Abraham, P.E.
   (Submitted under NOA#08-1015.03)
2. Test reports on: 1) Air Infiltration Test, per FBC, TAS 202-94
   2) Uniform Static Air Pressure Test, Loading per FBC, TAS 202-94
   3) Water Resistance Test, per FBC, TAS 202-94
   4) Small Missile Impact Test per FBC, TAS 201-94
   5) Large Missile Impact Test per FBC, TAS 201-94
   6) Cyclic Wind Pressure Loading per FBC, TAS 203-94

   along with marked-up drawings and installation diagram of an aluminum window wall system (specimen 10,11,12 & 13), prepared by Hurricane Test Laboratory, Inc., Test Report No. **HTL-0319-0107-03**, various dates, signed and sealed by Vinu J. Abraham, P.E.
   (Submitted under NOA#04-0217.11)
3. Test reports on: 1) Uniform Static Air Pressure Test, Loading per FBC, TAS 202-94
   2) Small Missile Impact Test per FBC, TAS 201-94
   3) Large Missile Impact Test per FBC, TAS 201-94
   4) Cyclic Wind Pressure Loading per FBC, TAS 203-94

   along with marked-up drawings and installation diagram of an aluminum window wall system (specimen 1), prepared by Hurricane Test Laboratory, Inc., Test Report No. **HTL-0319-0511-03**, dated 5/06-08/03, signed and sealed by Vinu J. Abraham, P.E.
   (Submitted under NOA#04-0217.11)

Manuel Perez

Manuel Perez, P.E.
Product Control Examiner
NOA No. 14-0624.19
Expiration Date: September 02, 2019
Approval Date: October 23, 2014

NOTICE OF ACCEPTANCE: EVIDENCE SUBMITTED

B. TESTS (CONTINUED)

4. Test reports on: 1) Air Infiltration Test, per FBC, TAS 202-94
2) Uniform Static Air Pressure Test, Loading per FBC, TAS 202-94
3) Water Resistance Test, per FBC, TAS 202-94
4) Small Missile Impact Test per FBC, TAS 201-94
5) Large Missile Impact Test per FBC, TAS 201-94
6) Cyclic Wind Pressure Loading per FBC, TAS 203-94
along with marked-up drawings and installation diagram of an aluminum window wall system (specimen 1), prepared by Hurricane Test Laboratory, Inc., Test Report No. **HTL-0319-0711-03**, dated 7/7-16/03, signed and sealed by Vinu J. Abraham, P.E.
(Submitted under NOA#04-0217.11)

5. Test reports on: 1) Uniform Static Air Pressure Test, Loading per FBC, TAS 202-94
2) Large Missile Impact Test per FBC, TAS 201-94
3) Cyclic Wind Pressure Loading per FBC, TAS 203-94
along with marked-up drawings and installation diagram of an aluminum window wall system (specimen W1), prepared by Hurricane Test Laboratory, Inc., Test Report No. **HTL-0319-0627-03**, dated 06/23/03, signed and sealed by Vinu J. Abraham, P.E.
(Submitted under NOA#04-0217.11)

6. Test reports on: 1) Uniform Static Air Pressure Test, Loading per FBC, TAS 202-94
2) Small Missile Impact Test per FBC, TAS 201-94
3) Cyclic Wind Pressure Loading per FBC, TAS 203-94
along with marked-up drawings and installation diagram of an aluminum window wall system (specimen 2,3,4), prepared by Hurricane Test Laboratory, Inc., Test Report No. **HTL-0319-1122-02**, dated 11/15-18/02, signed and sealed by Vinu J. Abraham, P.E.
(Submitted under NOA#04-0217.11)

7. Test reports on: 1) Large Missile Impact Test per FBC, TAS 201-94
2) Cyclic Wind Pressure Loading per FBC, TAS 203-94
along with marked-up drawings and installation diagram of an aluminum window wall system (specimen 1,2), prepared by Hurricane Test Laboratory, Inc., Test Report No. **HTL-0319-1125-03**, dated 11/24-26/03, signed and sealed by Vinu J. Abraham, P.E.
(Submitted under NOA#04-0217.11)

C. CALCULATIONS

1. Anchor verification calculations and structural analysis, complying with FBC-2004 and 2007, prepared by Larson Engineering, Inc., dated 06/25/08 and 11/20/08, signed and sealed by Ethan A. Charpentier, P.E.
(Submitted under NOA# 08-1015.03)

2. Glazing complies with **ASTM E1300-04**

Manuel Perez

Manuel Perez, P.E.
Product Control Examiner
NOA No. 14-0624.19
Expiration Date: September 02, 2019
Approval Date: October 23, 2014

NOTICE OF ACCEPTANCE: EVIDENCE SUBMITTED

D. QUALITY ASSURANCE

1. Miami–Dade Department of Regulatory and Economic Resources (RER).

E. MATERIAL CERTIFICATIONS

1. Notice of Acceptance No. **11–0624.02** issued to **E.I. DuPont DeNemours & Co.**, Inc. for their "**DuPont SentryGlas® Interlayer**" dated 08/25/11, expiring on 01/14/17.
2. Notice of Acceptance No. **12–1231.09** issued to **Eastman Chemical Company (MA)** for their "**Saflex HP Clear or Color Glass Interlayers**" dated 03/28/13, expiring on 04/14/18.
3. Notice of Acceptance No. **12–1231.08** issued to **Eastman Chemical Company (MA)** for their "**Saflex CP – Saflex and Saflex HP Composite Glass Interlayers with PET Core**" dated 03/28/13, expiring on 12/11/18.

F. STATEMENTS

1. Statement letter of conformance, complying with **FBC-2010**, dated June 18, 2014, signed and sealed by Ethan A. Charpentier, P.E.
2. Statement letter of no financial interest, dated December 1, 2008, signed and sealed by Ethan A. Charpentier, P.E.
   (Submitted under NOA# 08-1015.03)
3. Laboratory compliance letter for Test Report no. **HTL-0319-0509-06**, issued by Hurricane Test Laboratory, Inc., dated 08/09/06, signed and sealed by Vinu J. Abraham, P.E.
   (Submitted under NOA# 08-1015.03)

G. OTHER

1. Notice of Acceptance No. **12-0727.06**, issued to Harmon, Inc. for their Series "HI 7000" Pressure Plate Glazed, Aluminum Curtain Wall System – L.M.I., approved on 09/06/12 and expiring on 09/02/14.

Manuel Perez

Manuel Perez, P.E.
Product Control Examiner
NOA No. 14-0624.19
Expiration Date: September 02, 2019
Approval Date: October 23, 2014

L:\EngineeringSales\Systems\Hurricane System\09-23-2014 NOA Dwg Revisions\HI7000 LMI 2010 FBC\001_HI7000_lm.dwg - dbenson - 10/6/2014 3:20 PM

HARMON HI 7000 LARGE MISSILE PREGLAZED & UNITIZED PRESSURE PLATE GLAZING, ALUMINUM CURTAINWALL SYSTEM

THIS NOA INCLUDES WINDOW WALL, STOREFRONT & PUNCH OPENING SINGLE LITE APPLICATIONS AS WELL AS OPTION 2-SIDED STRUCTURAL SILICONE GLAZING DESIGN

DESIGN PARAMETERS

THIS PRODUCT HAS BEEN DESIGNED & TESTED IN ACCORDANCE WITH THE CURRENT FLORIDA BUILDING CODE REQUIREMENTS INCLUDING HIGH VELOCITY HURRICANE ZONE (HVHZ)

TAS-201 - LARGE & SMALL MISSILE IMPACT
TAS-202 - AIR LEAKAGE, WATER PENETRATION & STRUCTURAL PERFORMANCE
(WATER @ 20 psf, STRUCTURAL @ +110/-130 psf & +79.2/-148.9 psf)
TAS-203 - CYCLING
ASTM STANDARDS (MIAMI)
E283 - AIR LEAKAGE
E330 - STRUCTURAL PERFORMANCE
E331 - WATER PENETRATION
E1886 LEVEL "D" - IMPACT BY "MISSILE" & CYCLIC PRESSURES
E1996 - IMPACT BY WINDBORNE DEBRIS
AAMA - TIR - A9-91

SYSTEM DIMENSIONS

2 1/2" X 8" (MONOLITHIC GLASS)
2 1/2" X 8 3/4" (INSULATED GLASS)

FINISH

ON A PER JOB BASIS (EXPOSED AREAS)
CLEAR ANODIZED (NON-EXPOSED AREAS)
MILL FINISH (NON-EXPOSED AREAS) SETTING CHAIRS, ANCHORS, ETC.
ALUMINUM IN CONTACT WITH DISSIMILAR MATERIALS SHALL BE PROTECTED AS SPECIFIED IN SECTION 2003.8.4 OF THE FLORIDA BUILDING CODE

ALUMINUM ALLOY

6063-T5 6063-T6 6005-T5 6105-T5
SEE ALSO ALUMINUM MATERIAL LIST ON SHT 2

STEEL

ALL CLIP ANGLES OR REINFORCING STEEL SHALL BE PER ASTM-36 (PRIME PAINTED)

WELDING

CURRENT ASTM STANDARDS E70 - XX ELECTRODES UNLESS OTHERWISE NOTED

GLASS

SEE SHEET 7.

GASKETS

SILICONE OR EPDM --- SEE GASKET CHART ON SHEET 2

SEALANTS

STRUCTURAL SILICONE - DOW CORNING 983 (TWO PART) / RE-GLAZING - DOW CORNING 995
FRAME ASSEMBLY SEALS - DOW CORNING 795 OR DOW CORNING 791
PERIMETER WEATHER SEAL, BACKER ROD AND DOW CORNING 795

ANCHORAGE

FASTENERS TO BE CORROSION RESISTANT AS DETAILED HEREIN AND CONFORM TO F.B.C.
SEE ASSEMBLY SCREW CHART ON SHEET 2

SYSTEM SELECTION

CURTAINWALL
- TWIN SPAN - SHEET 5
- STACK C.W. - SHEET 6 & 24
- CORNERS - SHEET 24

WINDOW WALL / STOREFRONT / PUNCH OPENING
- SINGLE SPAN - SHEET 4
- CORNERS - SHEET 24

2-SIDED SILICONE OPTIONS SEE PAGE 15

ETHAN A. CHARPENTIER
LICENSE
No. 65106
STATE OF FLORIDA
PROFESSIONAL ENGINEER

OCT 0 9 2014

INDEX OF DRAWINGS

PAGE	DESCRIPTION
1	COVER SHEET - DESIGN PARAMETERS
2	MATERIAL LISTS
3	GLAZING DETAILS & RE-GLAZING DETAILS
4	ELEVATION - SINGLE SPAN WINDOW WALL / STOREFRONT
5	ELEVATION - TWIN SPAN CURTAINWALL
6	ELEVATION - TWIN SPAN w/ STACK HORIZONTAL CURTAINWALL
7	GLASS SCHEDULE - LARGE MISSILE
8	PART DRAWINGS
9	PART DRAWINGS
10	MULLION APPLICATION CHARTS SINGLE SPAN WINDOW WALL/STOREFRONT
11	MULLION APPLICATION CHARTS TWIN SPAN CURTAINWALL
12	MULLION APPLICATION CHARTS TWIN SPAN WITH STACK RAIL CURTAINWALL
13	ANCHOR APPLICATIONS
14	DETAILS OF TYPICAL HEADS, SILLS, & INTERMEDIATE HORIZONTALS
15	DETAILS OF TYPICAL VERTICALS
16	DETAIL OF DOOR, HEAD & JAMB AND SEGMENTED VERTICAL
17	DETAIL OF 90 DEGREE OUTSIDE CORNER (BOX)
18	DETAIL OF 5" STACK HORIZONTAL W/ SPLICE SLEEVE
19	STRAP ANCHOR & THRU-FRAME ANCHOR
20	ANGLES IN VERTICAL ANCHOR & ALUMINUM LUG IN VERTICAL ANCHOR
21	MID-SPAN ANCHOR & STACK WALL ANCHOR
22	JAMB ANCHORS / STACK WALL ANCHOR - EXPLODED ISOMETRIC VIEW
23	JAMB WINDLOAD CHARTS
24	ELEVATION - TWIN SPAN W/ STACK HORIZ. & 90' CORNER MULL.
25	HORIZONTAL DETAILS WITH MONOLITHIC ADAPTORS AND INS. SILL
26	HORIZONTAL DETAILS WITH BACK PANS
27	3 3/8" STACK HORIZONTAL DETAIL WITH SECTION CUT
28	3 3/8" STACK HORIZONTAL DETAIL WITH SECTION CUT
29	3 3/8" STACK HORIZ. DETAIL WITH SECTION CUT AT BACK PAN DETAILS
30	VERTICAL DETAILS BACK PAN AND MONOLITHIC ADAPTORS
31	VERTICAL DETAILS BACK PAN
32	90' CORNER MULLION DETAILS (DART)
33	VERTICAL JAMB DETAILS
34	DEADLOAD ANCHOR DETAIL WITH SECTION CUT
35	WINDLOAD ANCHOR DETAIL WITH SECTION CUT
36	OUTSIDE 90' CORNER DEADLOAD ANCHOR DETAIL
37	OUTSIDE 90' CORNER WINDLOAD ANCHOR DETAIL
38	OUTSIDE 90' CORNER @ SILL DETAIL
39	OUTSIDE 90' CORNER @ STACK DETAIL WITH SECTION CUT
40	VERTICAL JAMB AT SILL ANCHOR DETAIL
41	VERTICAL SILL ANCHOR AT MULLION, STIFFENER & REINFORCEMENT

Larson Engineering, Inc.
3524 Labore Road
White Bear Lake, MN 55110
(P) 651.481.9120 (F) 651.481.9201

DADE CO. STAMP

PRODUCT REVISED
as complying with the Florida Building Code
Acceptance No 14-0604.19
Expiration Date Sept. 2, 2019
By Manuel Feria
Miami Dade Product Control

ENGINEER STAMP

Florida Firm No. F-02000005175
Certificate of Authorization #9803
Ethan A. Charpentier
Registration No. 65106

Harmon

HI 7000 LARGE MISSILE
COVER SHEET

DATE: 06/28/04	3 3/16/09
1 11/18/08	4 5/22/12
2 3/10/09	5 10/03/14

DWG. NO. HI7000LM

L:\EngineeringSales\Systems\Hurricane System\09-23-2014 NOA Dwg Revisions\HI7000 LMI 2010 FBC\002_HI7000_lm.dwg - dbenson - 10/6/2014 2:54 PM

FRAME ASSEMBLY FASTENER LIST

A	PRESSURE PLATE BOLT FOR INSULATED GLASS SYSTEM	#14 X 1" HWH S.S. "A" POINT XYLAN COATED	2 1/2" FROM END AND 9" ON CENTER
B	TYPICAL HORIZONTAL FRAME ASSEMBLY SCREW	#12 X 1 1/2" HWH "A" POINT GRADE 5 XYLAN COATED	(4) REQUIRED PER JOINT
C	NON-TYPICAL HORIZONTAL ASSEMBLY SCREW TO BYPASS STEEL	#12 X 1 1/2" PFH "A" POINT GRADE 5 XYLAN COATED	(4) REQUIRED PER JOINT
D	ANCHOR STEEL FIXING PLATE INTO HORIZONTAL	#17-14 X 1" TYPE AB 304 STAINLESS	(1) REQUIRED PER PLATE
E	TEMPORARY ANCHOR FOR CORNER END CAPS	#10 X 1 1/4" TEK SCREW	(1) REQUIRED PER END CAP
F	PRESSURE PLATE BOLT FOR MONOLITHIC GLASS SYSTEM	#14 X 3/4" HWH S.S. "A" POINT XYLAN COATED	2 1/2" FROM END AND 9" ON CENTER
G	ALLEN HEAD SCREW FOR ANCHOR USED w/ STACK HORIZONTAL	1/4-20 ALLEN HEAD BOLT GRADE 5	LOCATED AT TOP & BOTTOM OF ANCHOR
H	GLASS ADAPTOR FOR MONOLITHIC GLASS SYSTEM	#12 X 1 1/4" PFH DRIL-FLEX	9" ON CENTER
J	ANCHOR FOR SILL	1/2" X 3 1/2" HWH GRADE 5 BOLT WITH WASHER AND NUT	(1) REQUIRED PER MULLION
K	ANCHOR FOR ANCHOR STRAP	3/8" X 3 3/4" PFH POWER BOLT WITH 3 1/ 2" MIN. EMBEDMENT	(2) REQUIRED PER MULLION
L	POCKET FILLER FOR STEEL BACK PAN	#12 X 2 1/2" PFH DRIL-FLEX	9" ON CENTER
M	STEEL REINFORCEMENT TO MULLION	3/ 8"-16 X 1" HWH GRADE 5 BOLT XYLAN COATED	(2) REQUIRED PER MULLION
N	STEEL CHANNEL STIFFENER ATTACHED TO STEEL BACK PAN	#12 X 1 1/2" HWH SELF TAPPING XYLAN COATED	9" ON CENTER
P	STEEL REINFORCING INTO CORNET MULLION	3/8"-16 RIVIT NUT	(2) REQUIRED PER MULLION
Q	STEEL ANGLE ATTACHED TO FRAME AND TO STEEL BACK PAN	1/4" STEEL POP RIVET	9" ON CENTER
R	STEEL BACK PAN INTO STEEL ANGLE	#12 X 3/4" HWH SELF TAPPING	9" ON CENTER
S	ANCHOR FOR STEEL ANGLES	3/ 8" X 3 3/4" HWH POWER BOLT WITH 3 1/2" MIN. EMBEDMENT	(2) REQUIRED PER CLIP
T	FOR INTERMEDIATE ANCHOR TO MULLION	3/8" X 1 1/4" HWH GRADE 5 BOLT WITH WASHER AND NUT	(4) REQUIRED PER CLIP
U	JACK BOLT FOR HOOK ANCHOR	3/8" X 2 1/2" HWH GRADE 5 BOLT WITH NUT	(1) REQUIRED PER CLIP

GASKET CHART

A	1/4"	PART # 770301	85 DUR. SILICONE	INTERIOR FIXED GASKET FOR 5/8" & 1 3/8" THICK GLASS (1/4" THICK SEAL)
B		PART # 750301	70 DUR. SILICONE	VERTICAL WHISKER GASKET
C		PART # 720301	70 DUR. EPDM	EXTERIOR SLIDE IN @ VERTICAL PRESSURE PLATE
D		PART # 730301	70 DUR. EPDM	EXTERIOR WEDGE
E		PART # 790301	70 DUR. EPDM	THERMAL BREAK FOR PRESSURE PLATE
F	5/16"	PART # 770302	85 DUR. SILICONE	INTERIOR. FIXED GASKET FOR 9/16" & 1 5/16" THICK GLASS (5/16" THICK SEAL)
G		PART # 790303	90 DUR. EPDM	ALL PERIMETERS
H		PART # 790302	90 DUR. EPDM	PERIMETER THERMAL BREAK
J		PART # 780301	70 DUR. SILICONE	ZONE DAM FOR MONOLITHIC GLASS 2 1/2" LONG
K		PART # 780302	70 DUR. SILICONE	ZONE DAM FOR INSULATED GLASS 2 1/2" LONG
L		PART # 700303	90 DUR. SILICONE	5" LONG SETTING BLOCK. (TEAR IN HALF FOR MONOLITHIC GLASS
M		PART # 740301	70 DUR. EPDM	AT BUTT JOINT FOR MONOLITHIC GLASS
N		PART # 740302	70 DUR. EPDM	AT BUTT JOINT FOR INSULATED GLASS
O	STICKY SIDE 1/4" X 3/8"	POLYURETHANE FOAM ADHESIVE ONE SIDE	HARD. SHORE A	INTERIOR FIXED TAPE FOR 5/8" & 1 3/8" THICK GLASS (1/4" THICK SEAL)
P	STICKY SIDE 3/8" X 3/8"	POLYURETHANE FOAM ADHESIVE ONE SIDE	HARD. SHORE A	INTERIOR FIXED TAPE FOR 9/16" & 1 5/16" THICK GLASS (5/16" THICK SEAL)
Q	.060 X 3/8"	POLYURETHANE FOAM ADHESIVE ONE SIDE	HARD. SHORE A	SPACER TAPE FOR SEGMENTED MULLION
R		PART # 780307	70 DUR. SILICONE	ZONE DAM FOR INSULATED GLASS 4 3/4" LONG
S		PART # 78030X	70 DUR. SILICONE	ZONE DAM FOR INSULATED GLASS 4 3/4" LONG
T		PART # 740601	60 DUR. EPDM	AT STACK HORIZONTAL EXTERIOR BULB GASKET
U		PART # 780303	70 DUR. SILICONE	END PLUG BOTTOM OF FEMALE MULL. AT STACK 2 1/2" LONG
V		PART # 780304	70 DUR. SILICONE	END PLUG BOTTOM OF MALE MULL. AT STACK 2 1/2" LONG
W		PART # 780305	70 DUR. SILICONE	END PLUG BOTTOM OF JAMB MULL. AT STACK 2 1/2" LONG
X		PART # 780306	70 DUR. SILICONE	END PLUG BOTTOM OF CORNER MULL. AT STACK

ALUMINUM MATERIAL LIST

	DESCRIPTION	PART #	ALLOY	TYP. THK.	REMARKS	REV
1	FEMALE VERTICAL MULLION	306001	6063-T6	.110		
2	MALE VERTICAL MULLION	306002	6063-T6	.110		
3	INTERMEDIATE HORIZONTAL	306101	6063-T5	.100		
4	JAMB - MONOLITHIC GLASS	306004	6063-T6	.110		
5	HEAD & SILL - MONOLITHIC GLASS	306103	6063-T5	.110		
6	JAMB - INSULATED GLASS	306003	6063-T6	.110		
7	HEAD & SILL - INSULATED GLASS	306102	6063-T5	.110		
8	JAMB COVER	300203	6063-T5	.100		
9	HEAD & SILL EXTERIOR COVER	300202	6063-T5	.100		
10	HEAD & SILL INTERIOR FILLER	306401	6063-T5	.080		
11	HORIZONTAL COVER	300201	6063-T5	.100		
12	VERTICAL COVER	300236	6063-T5	.060		
13	VERTICAL PRESSURE PLATE	300701	6105-T5	.100		
14	PERIMETER ADAPTOR - MONOLITHIC GLASS	300305	6105-T5	.080		
15	PERIMETER ADAPTOR - INSULATED GLASS	300304	6105-T5	.080		
16	HORIZONTAL ADAPTOR - MONOLITHIC GLASS	300303	6105-T5	.080		
17	HORIZONTAL ADAPTOR - INSULATED GLASS	300302	6105-T5	.080		
18	VERTICAL ADAPTOR - MONOLITHIC GLASS	300308	6105-T5	.093		
19	VERTICAL ADAPTOR - INSULATED GLASS	300301	6105-T5	.093		
20	ANTI-BUCKLING CLIP (EXTERIOR SIDE)	300306	6105-T5	.060	4" LONG 30" O.C. MAX.	
21	ANTI-BUCKLING CLIP (INTERIOR SIDE)	300310	6105-T5	.060	4" LONG 30" O.C. MAX.	
22	STRAP ANCHOR FEMALE	930102	6105-T5	.177	SEE DET. 1-4 SHT. 19	
23	STRAP ANCHOR MALE	930106	6105-T5	.187	SEE DET. 1-4 SHT. 19	
24	SLIDING ANCHOR FEMALE	930105	6105-T5	.250	SEE DET. 5-8 SHT. 20	
25	SLIDING ANCHOR MALE	930104	6105-T5	.435	SEE DET. 5-8 SHT. 20	
26	"STACK" SPLICE PLATE	930107	6005-T5	.187	SEE DET. 1 SHT. 18	
27	SERRATED PLATE	930110	6005-T5	.191	SEE DET. 3 & 4 SHT. 21	
28	"KNUCKLE" ANCHOR	930109	6005-T5	.250	SEE DET. 3 & 4 SHT. 21	
29	HOOK ANCHOR	930108	6005-T5	.250	SEE DET. 3 & 4 SHT. 21	
30	FLOOR EDGE PLATE	930111	6005-T5	.685	SEE DET. 3 & 4 SHT. 21	
31	ANTI-WALK ANGLE	.	6105-T5	.125	SEE DET. 3 & 4 SHT. 21	
32	MONOLITHIC ADAPTOR	300312	6063-T5	.060	SEE DET. 1,2&4 SHT. 25	
33	VERTICAL COVER	300216	6063-T5	.060	SEE DET. 12&13 SHT. 30	
34	90° CORNER COVER	300218	6063-T5	.055	SEE DET. 16&17 SHT. 32	
35	90° CORNER PRESSURE PLATE	300702	6063-T6	.100	SEE DET. 16&17 SHT. 32	
36	90° CORNER FEMALE MULLION	306005	6063-T6	.125	SEE DET. 16&17 SHT. 32	
37	90° CORNER MALE MULLION	306006	6063-T6	.125	SEE DET. 16&17 SHT. 32	
38	STACK HORIZONTAL SILL	306181	6063-T6	.125	SEE DET. 8 SHT. 27	
39	STACK HORIZONTAL HEAD	306191	6063-T6	.110	SEE DET. 8 SHT. 27	
40	STACK COVER	300217	6063-T5	.100	SEE DET. 8 SHT. 27	
41	STACK SPLICE SLEEVE	306801	6063-T6	.125	SEE DET. 8 SHT. 27	
42	MULLION SPLICE SLEEVE	306802	6063-T6	.100	SEE DET. 8 SHT. 27	
43	POCKET FILLER	300313	6063-T5	.060	SEE DET. 5-7 SHT. 26	
44	OPTIONAL CORNER COVER	300321	6063-T5	.100	SEE DET. 22A SHT. 36	

ETHAN A. CHARPENTIER LICENSE No. 65106 STATE OF FLORIDA PROFESSIONAL ENGINEER

OCT 0 9 2014

Larson Engineering, Inc.
3524 Labore Road
White Bear Lake, MN 55110
(P) 651.481.9120 (F) 651.481.9201

DADE CO. STAMP

PRODUCT REVISED
as complying with the Florida
Building Code
Acceptance No 14-0624.19
Expiration Date Sept 2, 2019
By Manuel Perez
Miami-Dade Product Control

ENGINEER STAMP

Florida Firm No. F-02000005175
Certificate of Authorization #9803
Ethan A. Charpentier
Registration No. 65106

Harmon

HI 7000 LARGE MISSILE
MATERIAL LISTS

DATE: 06/28/04 | 3 3/16/09
1 11/18/08 | 4 5/22/12
2 3/10/09 | 5 10/03/14

DWG. NO. HI7000LM

L:\EngineeringSales\Systems\Hurricane System\09-23-2014 NOA Dwg Revisions\HI7000 LMI 2010 FBC\003_HI7000_lm.dwg - dbenson - 10/3/2014 9:45 AM

GLAZING DETAILS

LAMINATED GLASS DETAILS

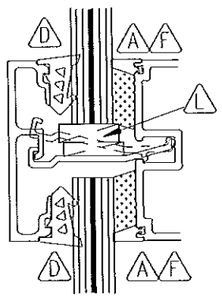

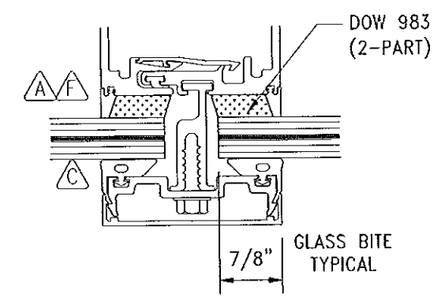

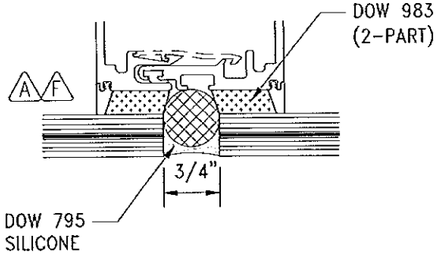

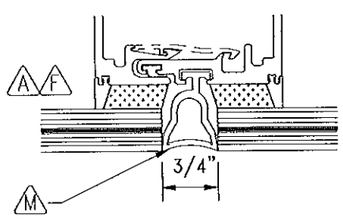

INSULATED LAMINATED GLASS DETAILS

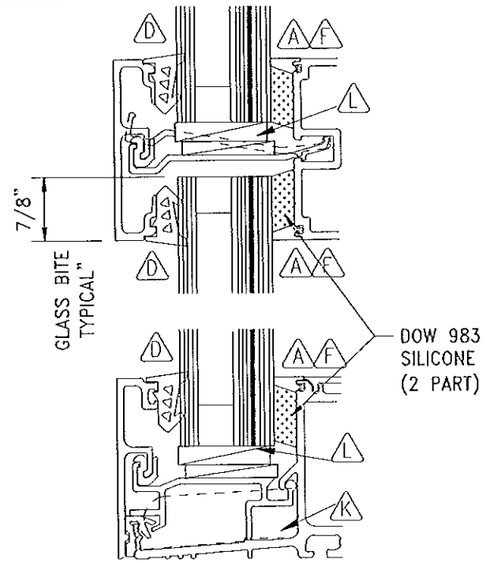

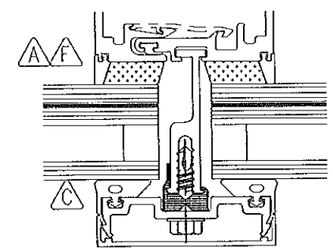

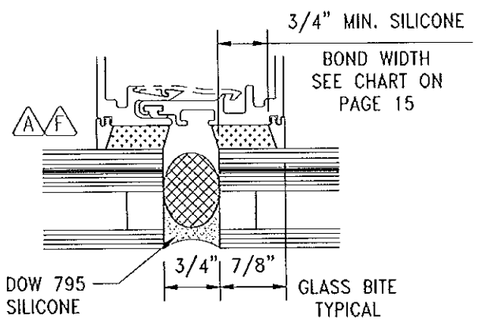

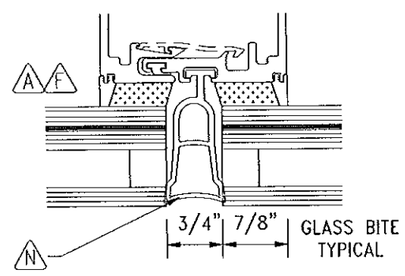

RE-GLAZING DETAILS

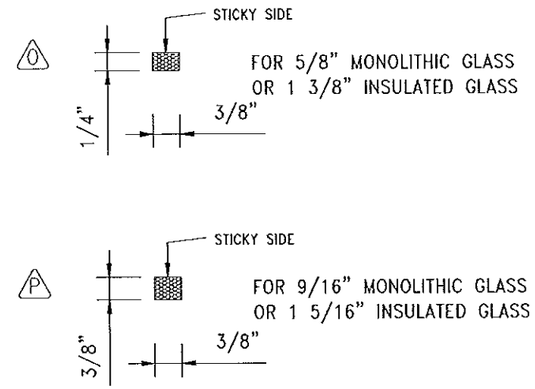

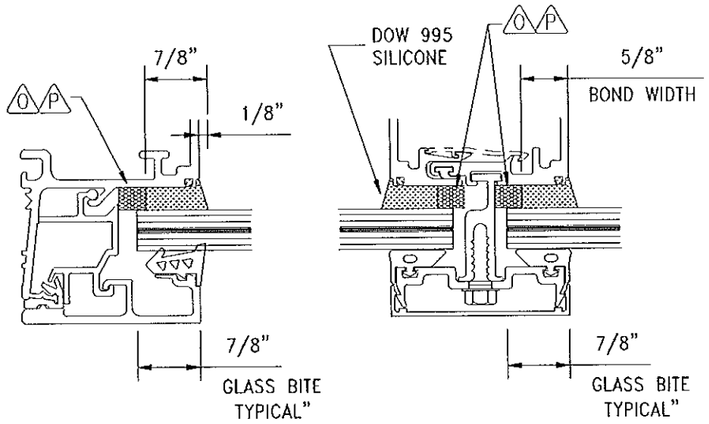

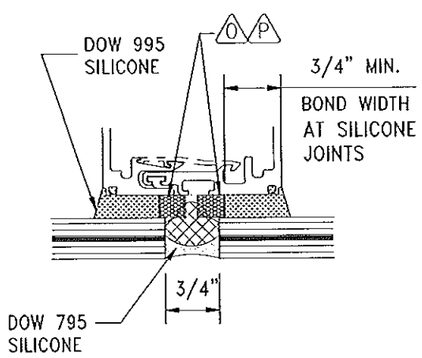

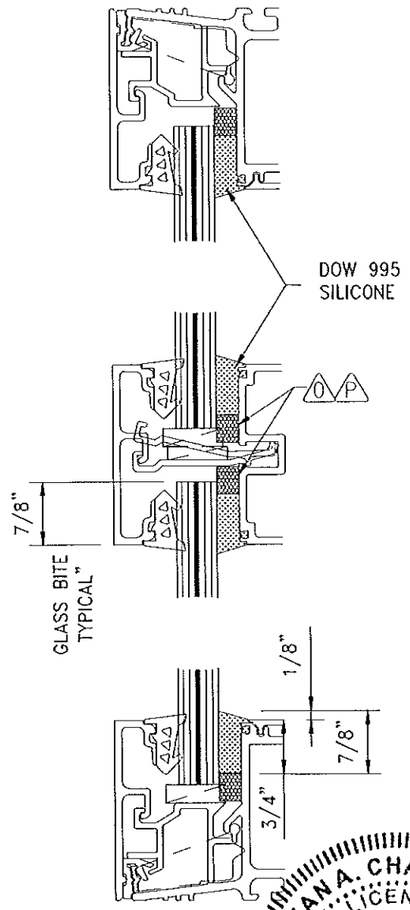

ETHAN A. CHARPENTIER
LICENSE
No. 65106
STATE OF
FLORIDA
PROFESSIONAL ENGINEER
OCT 09 2014

Larson Engineering, Inc.
3524 Labore Road
White Bear Lake, MN 55110
(P) 651.481.9120 (F) 651.481.9201

DADE CO. STAMP

PRODUCT REVISED
as complying with the Florida
Building Code
Acceptance No 14-0624.19
Expiration Date Sept. 6, 2019
By Manuel Perez
Miami-Dade Product Control

ENGINEER STAMP

Florida Firm No. F-02000005175
Certificate of Authorization #9803
Ethan A. Charpentier
Registration No. 65106

Harmon

HI 7000 LARGE MISSILE
GLAZING DETAILS
RE-GLAZING DETAILS

DATE: 06/28/04	3 3/16/09
1 11/18/08	4 5/22/12
2 3/10/09	5 10/03/14

DWG. NO. HI7000LM

SHEET 03 OF 41

L:\EngineeringSales\Systems\Hurricane System\09-23-2014 NOA Dwg Revisions\HI7000 LMI 2010 FBC\004_HI7000_lm.dwg - dbenson - 10/3/2014 9:45 AM

STOREFRONT, WINDOW WALL & PUNCHED OPENING

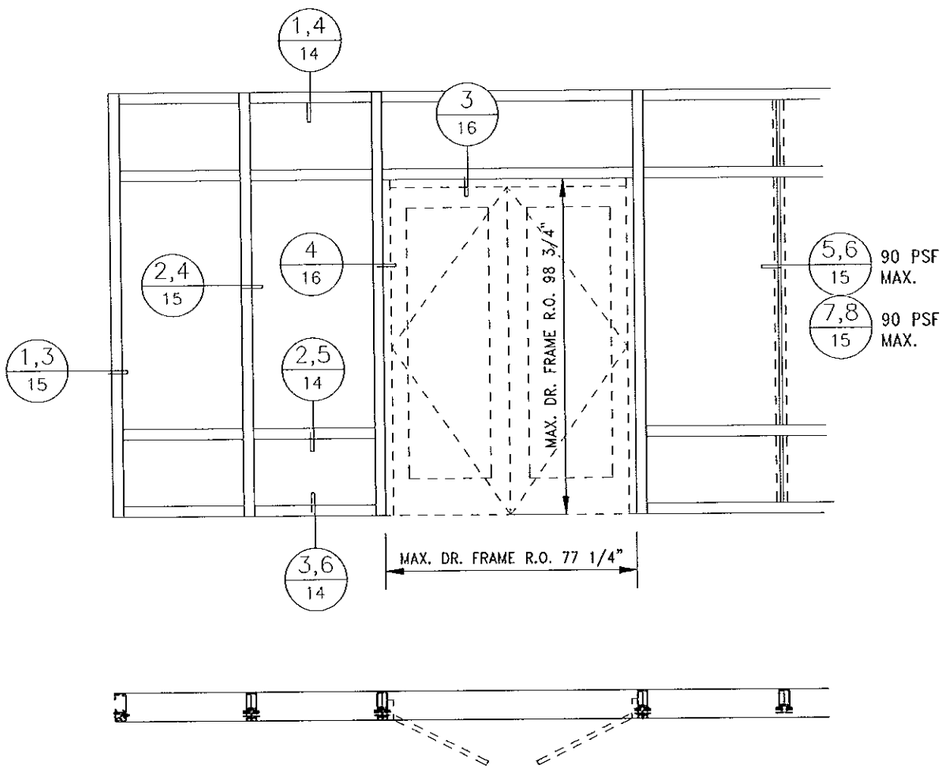

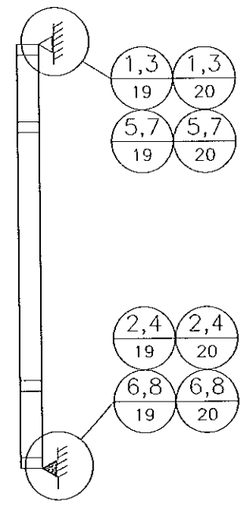

SYSTEM APPLICATION GUIDELINES:

1 SELECT GLASS FROM CHARTS ON SHEET 7. NOTE THE GLASS THICKNESS AND 4-SIDE CAPTURED VERSUS CAPTURED/SSG OPTIONS.

2 SELECT MULLION & REINFORCING AS REQUIRED FROM CHARTS ON SHEET 10 FOR SINGLE SPAN APPLICATION. APPLICATION BASED ON WIND LOAD, MODULE "B", AND SPAN "L". REFER TO GENERAL NOTES AND GUIDELINES REGARDING SPAN LIMITATIONS AND COMBINATIONS.

3 SELECT ANCHOR APPLICATIONS FROM SHEET 13. MAKE SELECTION BASED ON PERIMETER CONDITION AND END REACTIONS. NOTE MAXIMUM TESTED END REACTIONS FOR PROPER APPLICATION.

4 SELECT APPROPRIATE DETAILS FROM ELEVATION AT LEFT, BASED ON GLASS APPLICATION AND MULLION REINFORCING REQUIREMENTS. FOR SPECIFIC ANCHOR DETAILS, SEE DETAILS REFERENCED ON ANCHOR APPLICATION SHEET 13.

5 SELECT JAMB MULLION & REINFORCING AS REQUIRED FROM CHARTS ON SHEET 23.

6. LOWEST VALUE OF ALL TABLES SHALL APPLY FOR THE ENTIRE ASSEMBLY.

ETHAN A. CHARPENTIER
LICENSE
No. 65106
STATE OF FLORIDA
PROFESSIONAL ENGINEER
OCT 0 9 2014

Larson Engineering, Inc.
3524 Labore Road
White Bear Lake, MN 55110
(P) 651.481.9120 (F) 651.481.9201

GENERAL NOTES:

- DOOR AREA TESTED IS 90 PSF.
- SILICONE VERTICAL JOINTS AND GASKET JOINTS ARE TESTED TO 90 PSF
- DOORS AND DOOR FRAMES ARE NOT PART OF THIS SUBMISSION. ANY DOOR USED MUST MEET DADE COUNTY NOA.

DADE CO. STAMP

PRODUCT REVISED
as complying with the Florida Building Code
Acceptance No 14-0624.19
Expiration Date Sept. 4, 2019
By Manuel Fra
Miami Dade Product Control

ENGINEER STAMP

Florida Firm No. F-02000005175
Certificate of Authorization #9803
Ethan A. Charpentier
Registration No. 65106

Harmon

HI 7000 LARGE MISSILE
SINGLE SPAN APPLICATION
JAMBS

DATE: 06/28/04	3 3/16/09
1 11/18/08	4 5/22/12
2 3/10/09	5 10/03/14

DWG. NO. HI7000LM

SHEET 04 OF 41

L:\EngineeringSales\Systems\Hurricane System\09-23-2014 NOA Dwg Revisions\HI7000 LMI 2010 FBC\005_HI7000_lm.dwg - dbenson - 10/3/2014 9:45 AM

TWIN SPAN CURTAINWALL

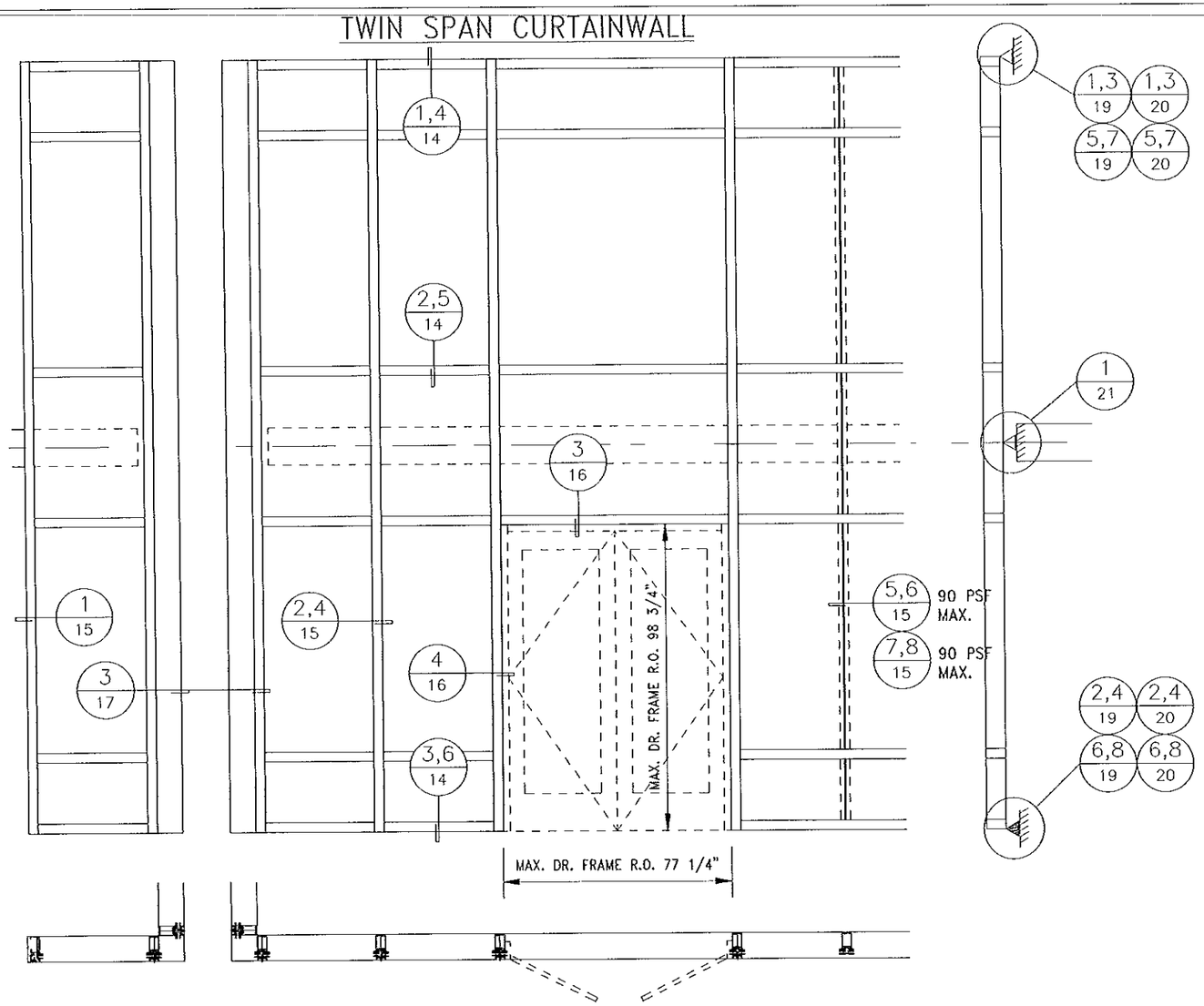

SYSTEM APPLICATION GUIDELINES:

1 SELECT GLASS FROM CHARTS ON SHEET 7. NOTE THE GLASS THICKNESS AND 4-SIDE CAPTURED VERSES CAPTURED/SSG OPTIONS.

2 SELECT MULLION & REINFORCING AS REQUIRED FROM CHARTS ON SHEET 11 FOR TWIN SPAN APPLICATION. APPLICATION BASED ON WIND LOAD, MODULE "B", AND SPAN "L". REFER TO GENERAL NOTES AND GUIDELINES REGARDING SPAN LIMITATIONS AND COMBINATIONS.

3 SELECT ANCHOR APPLICATIONS FROM SHEET 13. MAKE SELECTION BASED ON PERIMETER CONDITION AND END REACTIONS. NOTE MAXIMUM TESTED END REACTIONS FOR PROPER APPLICATION.

4 SELECT APPROPRIATE DETAILS FROM ELEVATION AT LEFT, BASED ON GLASS APPLICATION AND MULLION REINFORCING REQUIREMENTS. FOR SPECIFIC ANCHOR DETAILS, SEE DETAILS REFERENCED ON ANCHOR APPLICATION SHEET 13.

5 SELECT JAMB MULLION & REINFORCING AS REQUIRED FROM CHARTS ON SHEET 23.

6. LOWEST VALUE OF ALL TABLES SHALL APPLY FOR THE ENTIRE ASSEMBLY.

ETHAN A. CHARPENTIER
LICENSE
No. 65106
STATE OF FLORIDA
PROFESSIONAL ENGINEER

OCT 0 9 2014

Larson Engineering, Inc.
3524 Labore Road
White Bear Lake, MN 55110
(P) 651.481.9120 (F) 651.481.9201

GENERAL NOTES:

- DOOR AREA TESTED IS 90 PSF.
- SILICONE VERTICAL JOINTS AND GASKET JOINTS ARE TESTED TO 90 PSF
- DOORS AND DOOR FRAMES ARE NOT PART OF THIS SUBMISSION. ANY DOOR USED MUST MEET DADE COUNTY NOA.

DADE CO. STAMP

PRODUCT REVISED
as complying with the Florida
Building Code
Acceptance No. 14-0604.19
Expiration Date Sept 2, 2019
By Manuel Perez
Miami-Dade Product Control

ENGINEER STAMP

Florida Firm No. F-02000005175
Certificate of Authorization #9803
Ethan A. Charpentier
Registration No. 65106

Harmon

HI 7000 LARGE MISSILE
TWIN SPAN APPLICATION

DATE: 06/28/04	3 3/16/09
1 11/18/08	4 5/22/12
2 3/10/09	5 10/03/14

DWG. NO. HI7000LM

SHEET 05 OF 41

L:\EngineeringSales\Systems\Hurricane System\09-23-2014 NOA Dwg Revisions\HI7000 LMI 2010 FBC\006_HI7000_lm.dwg - dbenson - 10/3/2014 9:45 AM

STACK CURTAINWALL

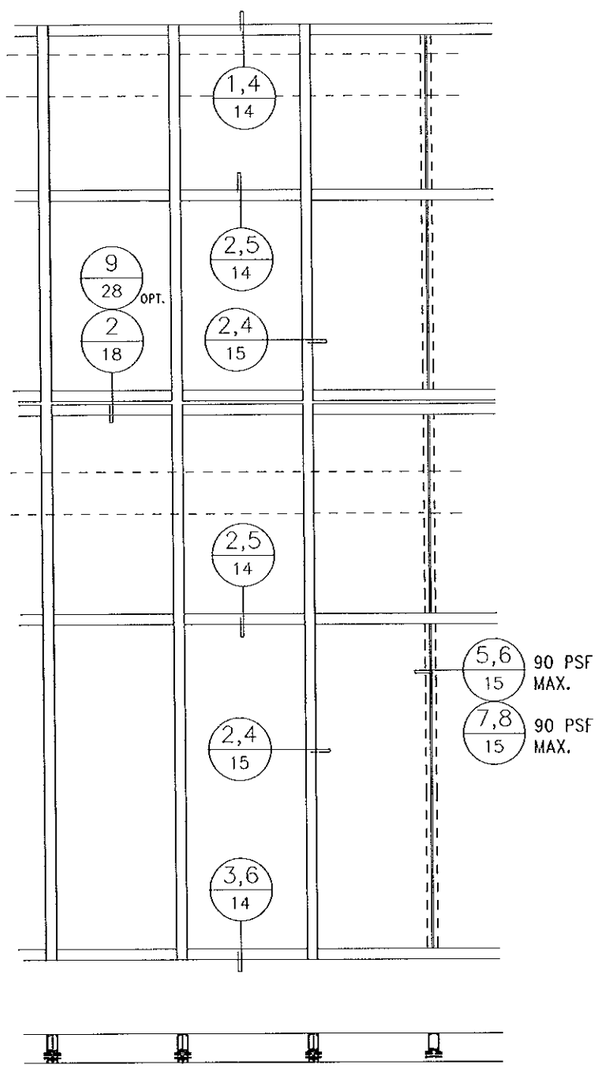

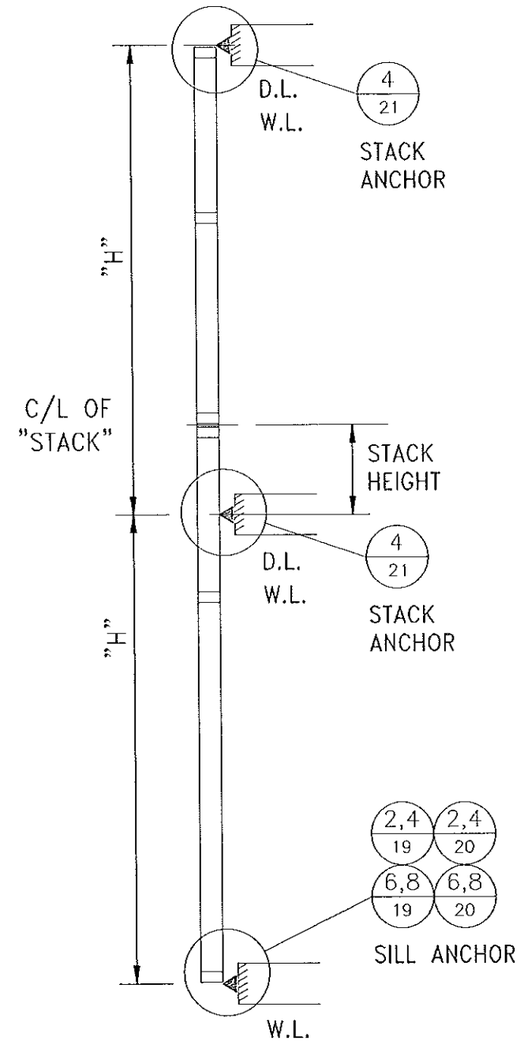

SYSTEM APPLICATION GUIDELINES:

1 SELECT GLASS FROM CHARTS ON SHEET 7. NOTE THE GLASS THICKNESS AND 4-SIDE CAPTURED VERSES CAPTURED/SSG OPTIONS.

2 SELECT MULLION & REINFORCING AS REQUIRED FROM CHARTS ON SHEET 12 FOR TWIN SPAN w/ STACK HORIZONTAL APPLICATION. APPLICATION BASED ON WIND LOAD, MODULE "B", AND SPAN "L". REFER TO GENERAL NOTES AND GUIDELINES REGARDING SPAN LIMITATIONS AND COMBINATIONS.

3 SELECT ANCHOR APPLICATIONS FROM SHEET 13. MAKE SELECTION BASED ON PERIMETER CONDITION AND END REACTIONS. NOTE MAXIMUM TESTED END REACTIONS FOR PROPER APPLICATION.

4 SELECT APPROPRIATE DETAILS FROM ELEVATION AT LEFT, BASED ON GLASS APPLICATION AND MULLION REINFORCING REQUIREMENTS. FOR SPECIFIC ANCHOR DETAILS, SEE DETAILS REFERENCED ON ANCHOR APPLICATION SHEET 13.

5 SELECT JAMB MULLION & REINFORCING AS REQUIRED FROM CHARTS ON SHEET 23.

6. LOWEST VALUE OF ALL TABLES SHALL APPLY FOR THE ENTIRE ASSEMBLY.

ETHAN A. CHARPENTIER
LICENSE
No. 65106
STATE OF FLORIDA
PROFESSIONAL ENGINEER

OCT 0 9 2014

Larson Engineering, Inc.
3524 Labore Road
White Bear Lake, MN 55110
(P) 651.481.9120 (F) 651.481.9201

GENERAL NOTES:

- SILICONE VERTICAL JOINTS AND GASKET JOINTS ARE TESTED TO 90 PSF
- SEE SHEET 24 FOR OPTIONAL STACK AND CORNER APPLICATION GUIDELINES

DADE CO. STAMP

PRODUCT REVISED
as complying with the Florida Building Code
Acceptance No 14-0624.19
Expiration Date Sept. 2, 2019
By Manuel Perez
Miami Dade Product Control

ENGINEER STAMP

Florida Firm No. F-02000005175
Certificate of Authorization #9803
Ethan A. Charpentier
Registration No. 65106

Harmon

HI 7000 LARGE MISSILE
TWIN SPAN APPLICATION
w/ STACK HORIZONTAL

DATE: 06/28/04	3 3/16/09
1 11/18/08	4 5/22/12
2 3/10/09	5 10/03/14

DWG. NO. HI7000LM

L:\EngineeringSales\Systems\Hurricane System\09-23-2014 NOA Dwg Revisions\HI7000 LMI 2010 FBC\007_HI7000_lm.dwg - dbenson - 10/3/2014 9:45 AM

HI 7000 Glass Load Capacity			Monolithic Glass Types				Insulated Glass Types	
DLO "B"	DLO "H"	SF	Type 4	Type 3	Type 18	Type 13	Type 12	Type 19
30"	54"	11.25 SF	+/-60 PSF	+/- 90 PSF	+110/-130 PSF	+110/-130 PSF	+110/-148 PSF	+110/-130 PSF
36"	54"	13.5 SF	+/-60 PSF	+/- 90 PSF	+110/-130 PSF	+110/-130 PSF	+110/-148 PSF	+110/-130 PSF
42"	54"	15.75 SF	+/-60 PSF	+/- 90 PSF	+110/-130 PSF	+110/-130 PSF	+110/-148 PSF	+110/-130 PSF
48"	54"	18 SF	+/-60 PSF	+/- 90 PSF	+110/-130 PSF	+110/-130 PSF	+110/-148 PSF	+110/-130 PSF
54"	54"	20.25 SF	+/-60 PSF	+/- 90 PSF	+110/-130 PSF	+110/-130 PSF	+110/-148 PSF	+110/-130 PSF
60"	54"	22.5 SF	+/-60 PSF	+/- 90 PSF	+110/-130 PSF	N/A	+110/-148 PSF	+110/-130 PSF
66"	54"	24.75 SF	+/-60 PSF	+/- 90 PSF	+110/-130 PSF	N/A	+110/-148 PSF	+110/-130 PSF
72"	54"	27 SF	+/-60 PSF	+/- 90 PSF	+110/-130 PSF	N/A	+110/-148 PSF	+110/-130 PSF
36"	60"	15 SF	+/-60 PSF	+/- 90 PSF	+110/-130 PSF	+110/-130 PSF	+110/-148 PSF	+110/-130 PSF
42"	60"	17.5 SF	+/-60 PSF	+/- 90 PSF	+110/-130 PSF	+110/-130 PSF	+110/-148 PSF	+110/-130 PSF
48"	60"	20 SF	+/-60 PSF	+/- 90 PSF	+110/-130 PSF	+110/-130 PSF	+110/-148 PSF	+110/-130 PSF
54"	60"	22.5 SF	+/-60 PSF	+/- 90 PSF	+110/-130 PSF	N/A	+110/-148 PSF	+110/-130 PSF
60"	60"	25 SF	+/-60 PSF	+/- 90 PSF	+110/-130 PSF	N/A	+110/-148 PSF	+110/-130 PSF
66"	60"	27.5 SF	+/-60 PSF	+/- 90 PSF	+110/-130 PSF	N/A	+110/-148 PSF	+110/-130 PSF
72"	60"	30 SF	+/-60 PSF	+/- 90 PSF	+110/-130 PSF	N/A	+110/-148 PSF	+110/-130 PSF
36"	66"	16.5 SF	+/-60 PSF	+/- 90 PSF	+110/-130 PSF	+110/-130 PSF	+110/-148 PSF	+110/-130 PSF
42"	66"	19.25 SF	+/-60 PSF	+/- 90 PSF	+110/-130 PSF	+110/-130 PSF	+110/-148 PSF	+110/-130 PSF
48"	66"	22 SF	+/-60 PSF	+/- 90 PSF	+110/-130 PSF	+110/-130 PSF	+110/-148 PSF	+110/-130 PSF
54"	66"	24.75 SF	+/-60 PSF	+/- 90 PSF	+110/-130 PSF	N/A	+110/-148 PSF	+110/-130 PSF
60"	66"	27.5 SF	+/-60 PSF	+/- 90 PSF	+110/-130 PSF	N/A	+110/-148 PSF	+110/-130 PSF
66"	66"	30.25 SF	+/-60 PSF	+/- 90 PSF	+110/-130 PSF	N/A	+110/-148 PSF	+110/-130 PSF
72"	66"	33 SF	+/-60 PSF	N/A	+110/-130 PSF	N/A	+110/-148 PSF	+110/-130 PSF
36"	72"	18 SF	+/-60 PSF	+/- 90 PSF	+110/-130 PSF	+110/-130 PSF	+110/-148 PSF	+110/-130 PSF
42"	72"	21 SF	+/-60 PSF	+/- 90 PSF	+110/-130 PSF	+110/-130 PSF	+110/-148 PSF	+110/-130 PSF
48"	72"	24 SF	+/-60 PSF	+/- 90 PSF	+110/-130 PSF	N/A	+110/-148 PSF	+110/-130 PSF
54"	72"	27 SF	+/-60 PSF	+/- 90 PSF	+110/-130 PSF	N/A	+110/-148 PSF	+110/-130 PSF
60"	72"	30 SF	+/-60 PSF	+/- 90 PSF	+110/-130 PSF	N/A	+110/-148 PSF	+110/-130 PSF
66"	72"	33 SF	+/-60 PSF	N/A	+110/-130 PSF	N/A	+110/-148 PSF	+110/-130 PSF
72"	72"	36 SF	+/-60 PSF	N/A	+110/-130 PSF	N/A	+110/-148 PSF	+110/-130 PSF
36"	78"	19.5 SF	+/-60 PSF	+/- 90 PSF	+110/-130 PSF	+110/-130 PSF	+110/-148 PSF	+110/-130 PSF
42"	78"	22.75 SF	+/-60 PSF	+/- 90 PSF	+110/-130 PSF	N/A	+110/-148 PSF	+110/-130 PSF
48"	78"	26 SF	+/-60 PSF	+/- 90 PSF	+110/-130 PSF	N/A	+110/-148 PSF	+110/-130 PSF
54"	78"	29.25 SF	+/-60 PSF	+/- 90 PSF	+110/-130 PSF	N/A	+110/-148 PSF	+110/-130 PSF
60"	78"	32.5 SF	+/-60 PSF	N/A	+110/-130 PSF	N/A	+110/-148 PSF	+110/-130 PSF
66"	78"	35.75 SF	+/-60 PSF	N/A	+110/-130 PSF	N/A	+110/-148 PSF	+110/-130 PSF
36"	84"	21 SF	+/-60 PSF	+/- 90 PSF	+110/-130 PSF	+110/-130 PSF	+110/-148 PSF	+110/-130 PSF
42"	84"	24.5 SF	+/-60 PSF	+/- 90 PSF	+110/-130 PSF	N/A	+110/-148 PSF	+110/-130 PSF
48"	84"	28 SF	+/-60 PSF	+/- 90 PSF	+110/-130 PSF	N/A	+110/-148 PSF	+110/-130 PSF
54"	84"	31.5 SF	+/-60 PSF	N/A	+110/-130 PSF	N/A	+110/-148 PSF	+110/-130 PSF
60"	84"	35 SF	+/-60 PSF	N/A	+110/-130 PSF	N/A	+110/-148 PSF	+110/-130 PSF
36"	90"	22.5 SF	+/-60 PSF	+/- 90 PSF	+110/-130 PSF	N/A	+110/-148 PSF	+110/-130 PSF
42"	90"	26.25 SF	+/-60 PSF	+/- 90 PSF	+110/-130 PSF	N/A	+110/-148 PSF	+110/-130 PSF
48"	90"	30 SF	+/-60 PSF	+/- 90 PSF	+110/-130 PSF	N/A	+110/-148 PSF	+110/-130 PSF
54"	90"	33.75 SF	+/-60 PSF	N/A	+110/-130 PSF	N/A	+110/-148 PSF	+110/-130 PSF
60"	90"	37.5 SF	+/-60 PSF	N/A	+110/-130 PSF	N/A	+110/-148 PSF	+110/-126 PSF
36"	96"	24 SF	+/-60 PSF	+/- 90 PSF	+110/-130 PSF	N/A	+110/-148 PSF	+110/-130 PSF
42"	96"	28 SF	+/-60 PSF	+/- 90 PSF	+110/-130 PSF	N/A	+110/-148 PSF	+110/-130 PSF
48"	96"	32 SF	+/-60 PSF	N/A	+110/-130 PSF	N/A	+110/-148 PSF	+110/-130 PSF
54"	96"	36 SF	+/-60 PSF	N/A	+110/-124 PSF	N/A	+110/-148 PSF	+110/-127 PSF
36"	102"	25.5 SF	+/-60 PSF	+/- 90 PSF	+110/-130 PSF	N/A	+110/-148 PSF	+110/-130 PSF
42"	102"	29.75 SF	+/-60 PSF	+/- 90 PSF	+110/-130 PSF	N/A	+110/-148 PSF	+110/-130 PSF
48"	102"	34 SF	+/-60 PSF	N/A	+110/-130 PSF	N/A	+110/-148 PSF	+110/-129 PSF
36"	108"	27 SF	+/-60 PSF	+/- 90 PSF	+110/-130 PSF	N/A	+110/-148 PSF	+110/-130 PSF
42"	108"	31.5 SF	+/-60 PSF	N/A	+110/-130 PSF	N/A	+110/-148 PSF	+110/-130 PSF
48"	108"	36 SF	+/-60 PSF	N/A	+110/-130 PSF	N/A	+110/-148 PSF	+110/-125 PSF
30"	114"	23.75 SF	+/-60 PSF	+/- 90 PSF	+110/-130 PSF	N/A	+110/-148 PSF	+110/-130 PSF
36"	114"	28.5 SF	+/-60 PSF	+/- 90 PSF	+110/-130 PSF	N/A	+110/-148 PSF	+110/-130 PSF
42"	114"	33.25 SF	+/-60 PSF	N/A	+110/-130 PSF	N/A	+110/-148 PSF	+110/-130 PSF
48"	114"	38 SF	+/-60 PSF	N/A	+110/-119 PSF	N/A	+110/-148 PSF	+110/-120 PSF
24"	120"	20 SF	+/-60 PSF	+/- 90 PSF	+110/-130 PSF	+110/-130 PSF	+110/-148 PSF	+110/-130 PSF
30"	120"	25 SF	+/-60 PSF	+/- 90 PSF	+110/-130 PSF	N/A	+110/-148 PSF	+110/-130 PSF
36"	120"	30 SF	+/-60 PSF	+/- 90 PSF	+110/-130 PSF	N/A	+110/-148 PSF	+110/-130 PSF
42"	120"	35 SF	+/-60 PSF	N/A	+110/-130 PSF	N/A	+110/-148 PSF	+110/-130 PSF
24"	132"	22 SF	+/-60 PSF	+/- 90 PSF	+110/-130 PSF	+110/-130 PSF	+110/-148 PSF	+110/-130 PSF
30"	132"	27.5 SF	+/-60 PSF	+/- 90 PSF	+110/-130 PSF	N/A	+110/-148 PSF	+110/-130 PSF
36"	132"	33 SF	+/-60 PSF	N/A	+110/-130 PSF	N/A	+110/-148 PSF	+110/-130 PSF
24"	143"	23.83 SF	+/-60 PSF	+/- 90 PSF	+110/-130 PSF	N/A	+110/-148 PSF	+110/-130 PSF
30"	143"	29.79 SF	+/-60 PSF	+/- 90 PSF	+110/-130 PSF	N/A	+110/-148 PSF	+110/-130 PSF
36"	143"	35.75 SF	+/-60 PSF	N/A	+110/-130 PSF	N/A	+110/-148 PSF	+110/-130 PSF

MONOLITHIC GLASS - LARGE MISSILE

4	9/16" (.090) SAFLEX HP HS / HS	TEST PRESSURE: +/-60 PSF DLO SF <= 38.03 SF	1/4" HS .090 EASTMAN CHEMICAL COMPANY SAFLEX HP (5) 1/4" HS
3	9/16" (.100) SG H.S. / H.S.	TEST PRESSURE: +/-90 PSF DLO SF <=30.71 SF	1/4" HS .100 DUPONT IONOPLAST SENTRYGLAS (5) 1/4" HS
18	9/16" (.075) SAFLEX CP H.S. / H.S.	TEST PRESSURE: +110 PSF/-130 PSF DLO SF <= 38.03 SF	1/4" HS .075 EASTMAN CHEMICAL COMPANY SAFLEX CP (5) 1/4" HS
13	9/16" (.100) SG W/FRIT H.S. / H.S.	TEST PRESSURE: +110 PSF/-130 PSF DLO SF <=22.44 SF	1/4" HS .100 DUPONT IONOPLAST SENTRYGLAS (5) 1/4" HS

INSULATED GLASS - LARGE MISSILE

12	1 5/16" (.100) SG IG HS / HS - HS	TEST PRESSURE: +110 PSF/-148 PSF DLO SF <= 38.03 SF	1/4" HS 1/4" HS AIR SPACE 1/4" HS .100 DUPONT IONOPLAST SENTRYGLAS (5)
19	1 5/16" (.075) SAFLEX CP HS / HS - HS	TEST PRESSURE +110 PSF/-130 PSF DLO SF <= 38.03 SF	1/4" HS 1/4" HS AIR SPACE 1/4" HS .075 EASTMAN CHEMICAL COMPANY SAFLEX CP (5)

NOTES:

ALL GLASS SIZES MUST MEET ASTM E1300-04 WITH THE SQUARE FOOT LESS THAN OR EQUAL TO THE TESTED SQUARE FOOT SIZES AT THE TESTED PRESSURES.

GLASS FORMULA FOR ALL GLASS = DLO+1 3/4" HORIZONTALLY AND VERTICALLY

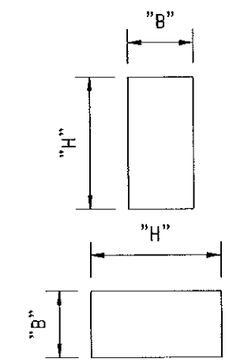

DIM. "B" AND "H" REFER TO DLO ON SHOP DRAWINGS

NOTE:
ALL GLASS TYPES HAVE BEEN TESTED FOR 4-SIDE CAPTURED APPLICATION.

ONLY GLASS TYPES 18 & 19 HAVE BEEN TESTED FOR VERTICAL SSG APPLICATION FOR MAXIMUM 90 PSF.

ETHAN A. CHARPENTIER
LICENSE
No. 65106
STATE OF FLORIDA
PROFESSIONAL ENGINEER

OCT 0 9 2014

Larson Engineering, Inc.
3524 Labore Road
White Bear Lake, MN 55110
(P) 651.481.9120 (F) 651.481.9201

DADE CO. STAMP

PRODUCT REVISED
as complying with the Florida Building Code
Acceptance No 14-0624.19
Expiration Date Sept. 2, 2019
By Manuel Perez
Miami Dade Product Control

ENGINEER STAMP

Florida Firm No. F-02000005175
Certificate of Authorization #9803
Ethan A. Charpentier
Registration No. 65106

Harmon

HI 7000 LARGE MISSILE
GLASS APPLICATIONS
LARGE MISSILE

DATE: 06/28/04	(3) 3/16/09
(1) 11/18/08	(4) 5/22/12
(2) 3/10/09	(5) 10/03/14

DWG. NO. HI7000LM

L:\EngineeringSales\Systems\Hurricane System\09-23-2014 NOA Dwg Revisions\HI7000 LMI 2010 FBC\008_HI7000_lm.dwg - dbenson - 10/3/2014 9:45 AM

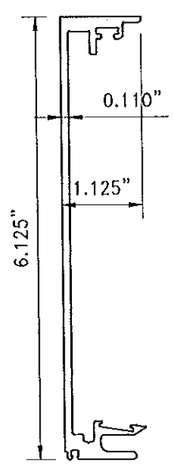

306001 (1)
FEMALE MULLION

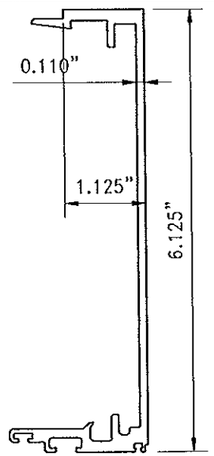

306002 (2)
MALE MULLION

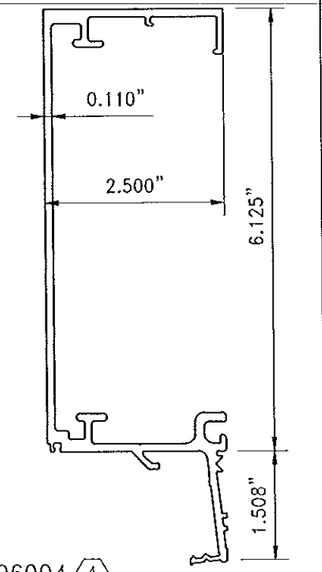

306004 (4)
MONOLITHIC JAMB

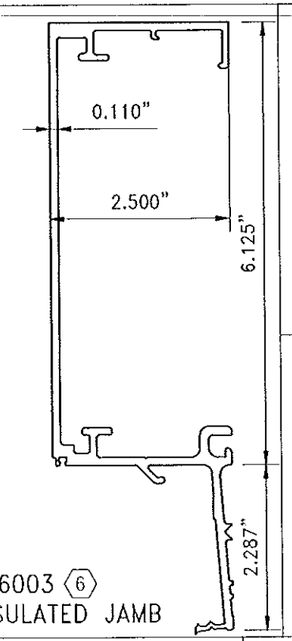

306003 (6)
INSULATED JAMB

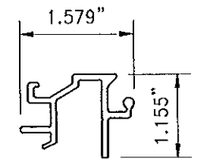

300305 (14)
MONO-PERIM.ADAPT.

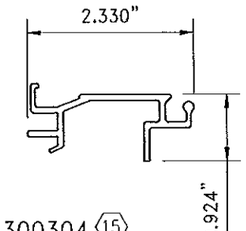

300304 (15)
INS- PERIM. ADAPT.

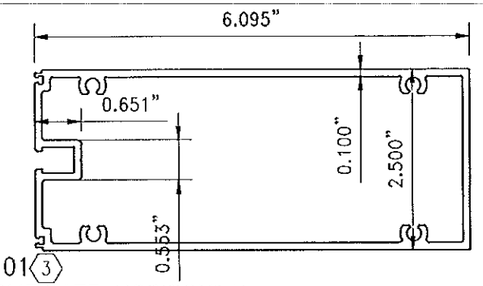

306101 (3)
INTERMEDIATE HORIZONTAL

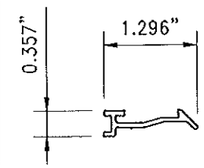

300310 (21)
ANTI-BUCKLING CLIP

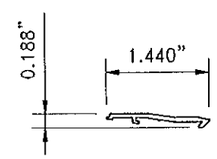

300306 (20)
ANTI-BUCKLING CLIP

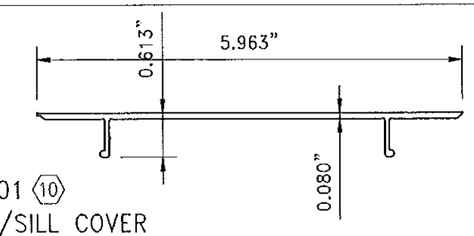

306401 (10)
HEAD/SILL COVER

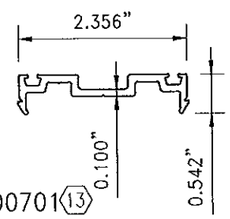

300701 (13)
PERSSURE BAR

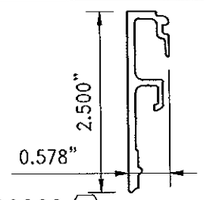

300202 (9)
HD/SILL COVER

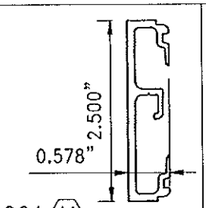

300201 (11)
HORIZ. COVER

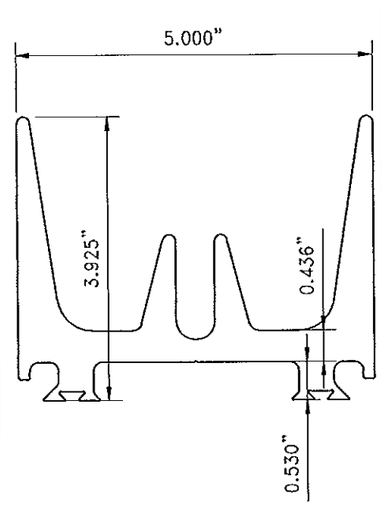

930104 (25)
SLIDING ANCHOR MALE

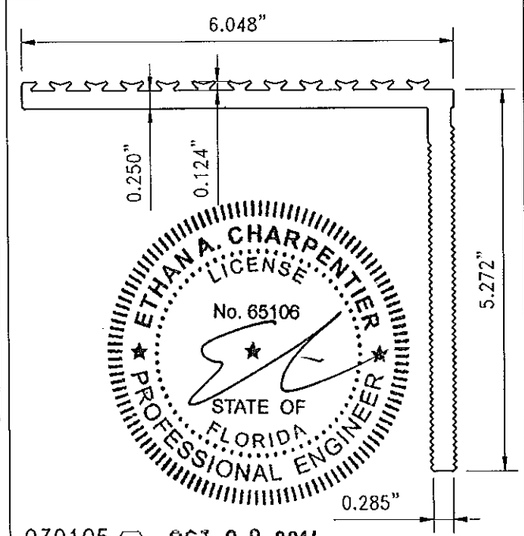

930105 (24)
SLIDING ANCHOR FEMALE

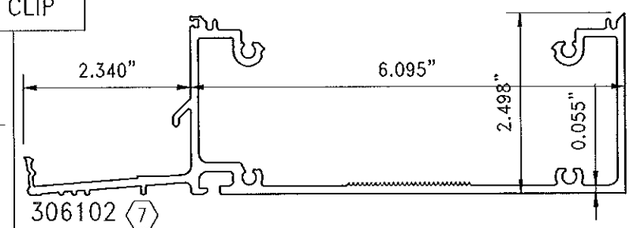

306102 (7)
INSULATED HEAD/SILL

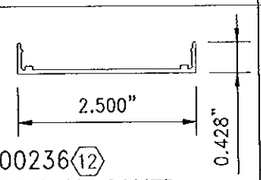

300236 (12)
VERTICAL COVER

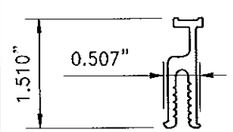

300308 (18)
MONO-VERT. ADAPT.

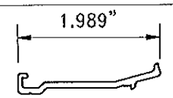

300303 (16)
MONO-HORIZ.ADAPT.

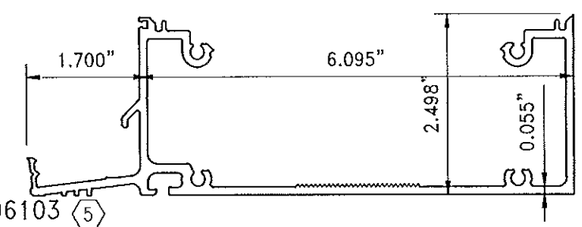

306103 (5)
MONO- HEAD/SILL

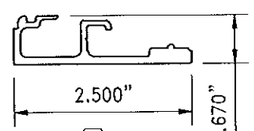

300203 (8)
JAMB COVER

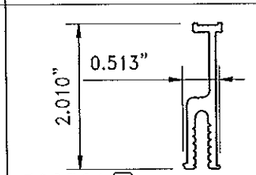

300301 (19)
INS.-VERT. ADAPT.

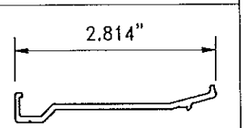

300302 (17)
INS.-HORIZ.ADAPT.

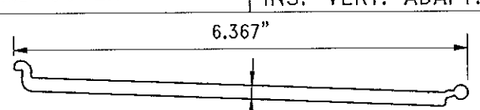

930106 (23)
STRAP ANCHOR MALE

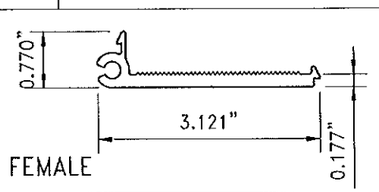

930102 (22)
STRAP ANCHOR FEMALE

ETHAN A. CHARPENTIER
LICENSE
No. 65106
STATE OF FLORIDA
PROFESSIONAL ENGINEER

OCT 09 2014

NOTES:
FOR STACK AND CORNER COMPONENT PART DRAWINGS SEE PAGE 09

DADE CO. STAMP

PRODUCT REVISED
as complying with the Florida Building Code
Acceptance No 14.0624.19
Expiration Date Sept. 2, 2019
By Manuel Soses
Miami Dade Product Control

ENGINEER STAMP

Florida Firm No. F-02000005175
Certificate of Authorization #9803
Ethan A. Charpentier
Registration No. 65106

Larson Engineering, Inc.
3524 Labore Road
White Bear Lake, MN 55110
(P) 651.481.9120 (F) 651.481.9201

Harmon

HI 7000 LARGE MISSILE
PART DRAWINGS

DATE: 06/28/04	3 3/16/09
1 11/18/08	4 5/22/12
2 3/10/09	5 10/03/14

DWG. NO. HI7000LM

L:\EngineeringSales\Systems\Hurricane System\09-23-2014 NOA Dwg Revisions\HI7000 LM: 2010 FBC\009_HI7000_lm.dwg - dbenson - 10/3/2014 9:45 AM

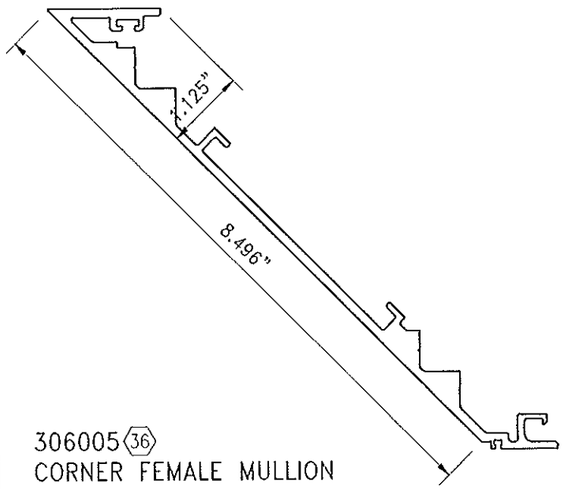

306005 (36)
CORNER FEMALE MULLION

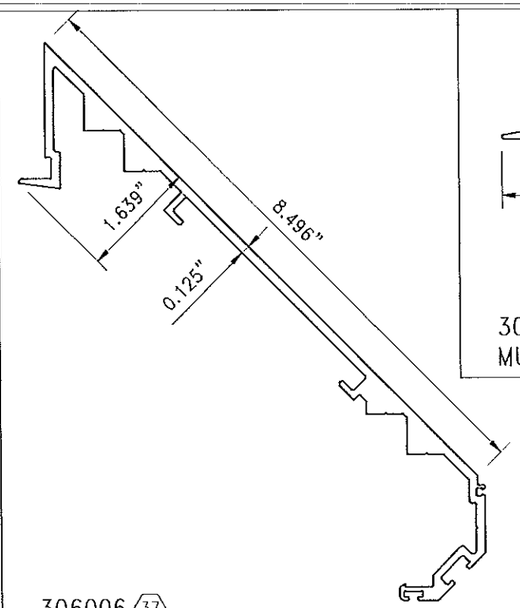

306006 (37)
CORNER MALE MULLION

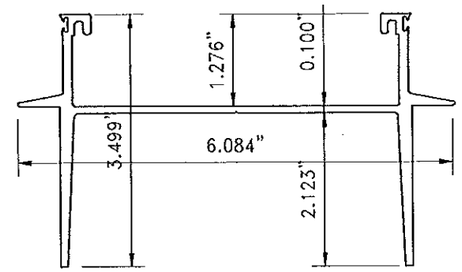

306802 (42)
MULLION SPLICE SLEEVE

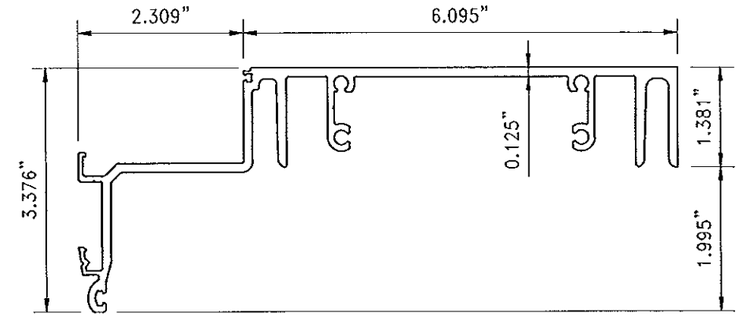

306181 (38)
STACK SILL

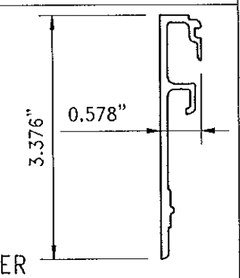

300217 (40)
STACK COVER

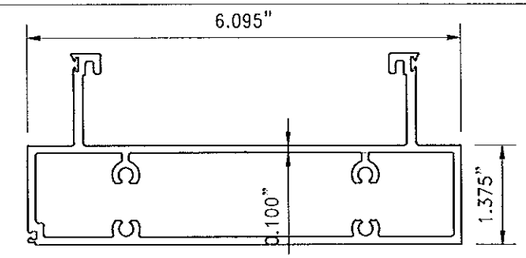

306191 (39)
STACK HEAD

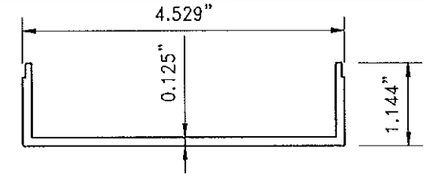

306801 (41)
STACK SPLICE SLEEVE

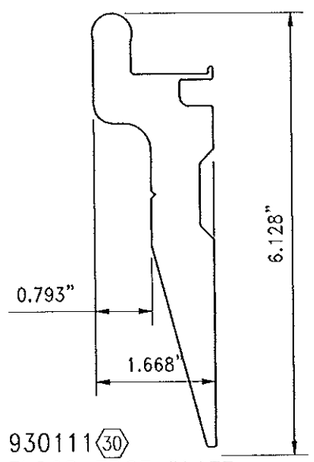

930111 (30)
FLOOR EDGE PLATE

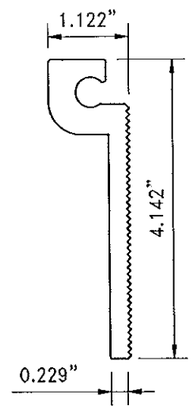

930109 (28)
KNUCKLE ANCHOR

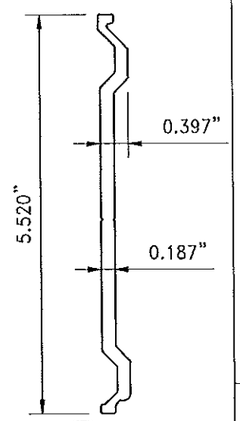

930107 (26)
STACK SPLICE PLATE

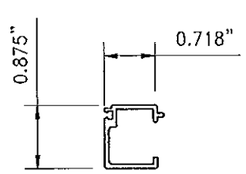

300312 (32)
MONOLITHIC ADAPTER

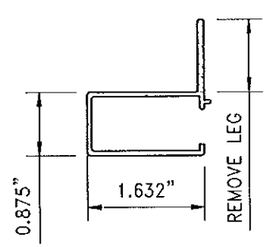

300313 (43)
POCKET FILLER

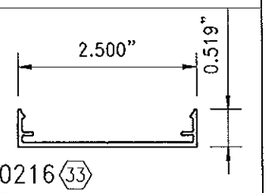

300216 (33)
OPTIONAL VERT. COVER

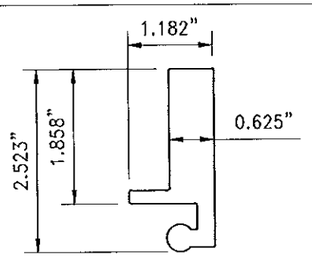

930108 (29)
HOOK ANCHOR

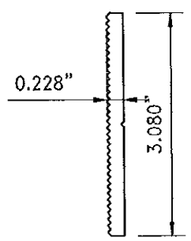

930110 (27)
SERRATED PLATE

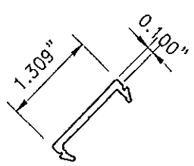

300702 (35)
CORNER PRES. PLATE

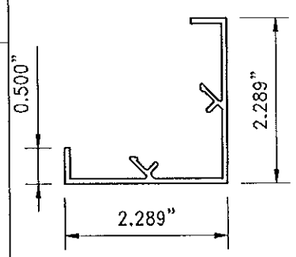

300218 (34)
CORNER COVER

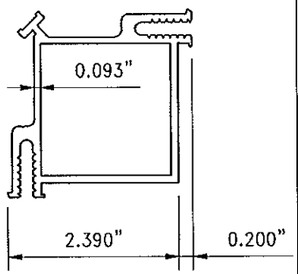

300321 (44)
CORNER ADAPTOR

ETHAN A. CHARPENTIER
LICENSE
No. 65106
STATE OF FLORIDA
PROFESSIONAL ENGINEER

OCT 0 9 2014

Larson Engineering, Inc.
3524 Labore Road
White Bear Lake, MN 55110
(P) 651.481.9120 (F) 651.481.9201

DADE CO. STAMP

PRODUCT REVISED
as complying with the Florida
Building Code
Acceptance No 14-0624.19
Expiration Date Sept 2, 2019
By Manuel Sosa
Miami Dade Product Control

ENGINEER STAMP

Florida Firm No. F-02000005175
Certificate of Authorization #9803
Ethan A. Charpentier
Registration No. 65106

Harmon

HI 7000 LARGE MISSILE
PART DRAWINGS

DATE: 06/28/04	3 3/16/09
1 11/18/08	4 5/22/12
2 3/10/09	5 10/03/14

DWG. NO. HI7000LM

SHEET 09 OF 41

L:\EngineeringSales\Systems\Hurricane System\09-23-2014 NOA Dwg Revisions\HI7000 LMI 2010 FBC\010_HI7000_lm.dwg - dbenson - 10/3/2014 9:46 AM

SINGLE SPAN APPLICATION

REINIFORCING OPTIONS → 1 2 3 4 5 6 7

	"B"	Case 1 "L"/"R"	Case 2 "L"/"R"	Case 3 "L"/"R"	Case 4 "L"/"R"	Case 5 "L"/"R"	Case 6 "L"/"R"	Case 7 "L"/"R"
UP TO MAXIMUM 60 PSF POS. OR NEG. LOAD	3'-0"	10'-4"	13'-9"	16'-6"	17'-7"	18'-3"	19'-6"	20'-8"
		933	1243	1490	1587	1645	1758	1862
	4'-0"	8'-11"	11'-11"	14'-4"	15'-6"	16'-8"	18'-2"	19'-2"
		1077	1435	1721	1863	2002	2181	2310
	5'-0"	8'-0"	10'-8"	12'-9"	13'-10"	14'-10"	17'-0"	18'-2"
		1204	1605	1924	2083	2238	2554	2731
	6'-0"	7'-3"	9'-9"	11'-8"	12'-8"	13'-7"	15'-6"	17'-4"
		1319	1758	2107	2282	2451	2798	3131
UP TO MAXIMUM 70 PSF POS. OR NEG. LOAD	3'-0"	9'-7"	12'-9"	15'-3"	16'-7"	17'-6"	18'-9"	19'-10"
		1007	1343	1610	1743	1847	1973	2090
	4'-0"	8'-3"	11'-0"	13'-3"	14'-4"	15'-5"	17'-5"	18'-6"
		1163	1550	1859	2013	2162	2448	2593
	5'-0"	7'-5"	9'-10"	11'-10"	12'-10"	13'-9"	15'-9"	17'-6"
		1301	1733	2078	2250	2417	2759	3065
	6'-0"	6'-9"	9'-0"	10'-10"	11'-8"	12'-7"	14'-4"	16'-1"
		1425	1899	2276	2465	2648	3022	3391
UP TO MAXIMUM 80 PSF POS. OR NEG. LOAD	3'-0"	8'-11"	11'-11"	14'-4"	15'-6"	16'-8"	18'-2"	19'-2"
		1077	1435	1721	1863	2002	2181	2310
	4'-0"	7'-9"	10'-4"	12'-4"	13'-5"	14'-5"	16'-5"	17'-10"
		1244	1657	1987	2152	2311	2638	2866
	5'-0"	6'-11"	9'-3"	11'-1"	12'-0"	12'-10"	14'-8"	16'-6"
		1390	1853	2221	2405	2584	2949	3309
	6'-0"	6'-4"	8'-5"	10'-1"	10'-11"	11'-9"	13'-5"	15'-1"
		1523	2030	2433	2635	2830	3231	3625
UP TO MAXIMUM 90 PSF POS. OR NEG. LOAD	3'-0"	8'-5"	11'-3"	13'-6"	14'-7"	15'-8"	17'-7"	18'-8"
		1142	1522	1825	1976	2123	2382	2523
	4'-0"	7'-3"	9'-9"	11'-8"	12'-8"	13'-7"	15'-6"	17'-4"
		1319	1758	2107	2282	2451	2798	3131
	5'-0"	6'-6"	8'-8"	10'-5"	11'-4"	12'-2"	13'-10"	15'-7"
		1475	1965	2356	2551	2741	3128	3510
	6'-0"	5'-11"	7'-11"	9'-6"	10'-4"	11'-1"	12'-8"	14'-2"
		1615	2153	2581	2795	3002	3426	3845

REINIFORCING OPTIONS → 1 2 3 4 5 6 7

	"B"	Case 1 "L"/"R"	Case 2 "L"/"R"	Case 3 "L"/"R"	Case 4 "L"/"R"	Case 5 "L"/"R"	Case 6 "L"/"R"	Case 7 "L"/"R"
UP TO MAXIMUM 100 PSF POS. OR NEG. LOAD	3'-0"	8'-0"	10'-8"	12'-9"	13'-10"	14'-10"	17'-0"	18'-2"
		1204	1605	1924	2083	2238	2554	2731
	4'-0"	6'-11"	9'-3"	11'-1"	12'-0"	12'-10"	14'-8"	16'-6"
		1390	1853	2221	2405	2584	2949	3309
	5'-0"	6'-2"	8'-3"	9'-11"	10'-9"	11'-6"	13'-2"	14'-9"
		1554	2072	2483	2689	2889	3297	3700
	6'-0"	5'-8"	7'-6"	9'-0"	9'-9"	10'-6"	12'-0"	13'-6"
		1703	2269	2720	2946	3164	3612	4053
UP TO MAXIMUM 110 PSF POS. OR NEG. LOAD	3'-0"	7'-7"	10'-2"	12'-2"	13'-2"	14'-2"	16'-2"	17'-9"
		1263	1683	2018	2185	2347	2679	2933
	4'-0"	6'-7"	8'-9"	10'-7"	11'-5"	12'-3"	14'-0"	15'-9"
		1458	1943	2330	2523	2710	3093	3471
	5'-0"	5'-11"	7'-10"	9'-5"	10'-3"	11'-0"	12'-6"	14'-1"
		1630	2173	2605	2821	3030	3458	3881
	6'-0"	5'-4"	7'-2"	8'-7"	9'-4"	10'-0"	11'-5"	12'-10"
		1786	2380	2853	3090	3319	3788	4251
UP TO MAXIMUM 110 PSF POS. OR 120 PSF NEG. LOAD	3'-0"	7'-3"	9'-9"	11'-8"	12'-8"	13'-7"	15'-6"	17'-4"
		1319	1758	2107	2282	2451	2798	3131
	4'-0"	6'-4"	8'-5"	10'-1"	10'-11"	11'-9"	13'-5"	15'-1"
		1523	2030	2433	2635	2830	3231	3625
	5'-0"	5'-8"	7'-6"	9'-0"	9'-9"	10'-6"	12'-0"	13'-6"
		1703	2269	2720	2946	3164	3612	4053
	6'-0"	5'-2"	6'-10"	8'-3"	8'-11"	9'-7"	10'-11"	12'-3"
		1865	2486	2980	3227	3466	3956	4440
UP TO MAXIMUM 110 PSF POS. OR 130 PSF NEG. LOAD	3'-0"	7'-0"	9'-4"	11'-2"	12'-2"	13'-0"	14'-11"	16'-9"
		1373	1830	2193	2375	2551	2912	3268
	4'-0"	6'-1"	8'-1"	9'-8"	10'-6"	11'-3"	12'-11"	14'-6"
		1585	2113	2533	2743	2946	3362	3773
	5'-0"	5'-5"	7'-3"	8'-8"	9'-5"	10'-1"	11'-6"	12'-11"
		1772	2362	2831	3066	3294	3759	4219
	6'-0"	4'-11"	6'-7"	7'-11"	8'-7"	9'-2"	10'-6"	11'-6"
		1941	2587	3102	3359	3608	4118	4515

GENERAL NOTES:

- "L" = MAXIMUM MULLION SPAN
- "B" = C/L TO C/L SPACING
- "B" = $\frac{W1 + W2}{2}$ (W1, W2)
- FOR SINGLE SPAN MAXIMUM DEFL. = L/180 or 1"
- (WHEN STEEL RIENF. IS USED, LENGTH OF STEEL IS LENGTH OF MULLION MINUS 12")
- SPANS ARE LIMITED BY MAXIMUM TESTED END REACTIONS
- R= REACTION (REFER TO PAGE 13 FOR BUILDING CONDITION TYPES AND PAGES 19, 20, 21, 23 FOR REACTION DETAIL OPTIONS)

SINGLE SPAN

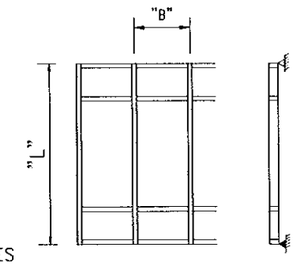

REINFORCING OPTIONS

1 — COMBINED Ix = 12.941 in⁴ — NO REINFORCING

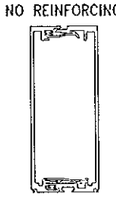

2 — COMBINED Ix = 22.993 in⁴ — 1/4" x 5 1/2" STL BAR

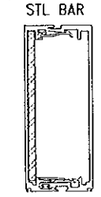

3 — COMBINED Ix = 33.045 in⁴ — (2) 1/4" x 5 1/2" STL BARS

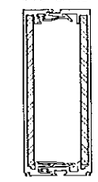

4 — COMBINED Ix = 38.751 in⁴ — C5x9

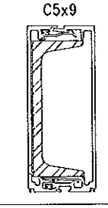

5 — COMBINED Ix = 44.714 in⁴ — C5x6.7 w/ 1/4" x 5 1/2" STL BAR

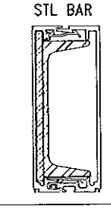

6 — COMBINED Ix = 58.254 in⁴ — 1 1/2" x 5" STL BAR

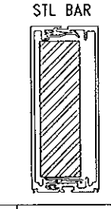

7 — COMBINED Ix = 73.538 in⁴ — 2" x 5" STL BAR

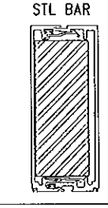

ETHAN A. CHARPENTIER LICENSE No. 65106 STATE OF FLORIDA PROFESSIONAL ENGINEER

Larson Engineering, Inc.
3524 Labore Road
White Bear Lake, MN 55110
(P) 651.481.9120 (F) 651.481.9201

OCT 09 2014

DADE CO. STAMP

PRODUCT REVISED
as complying with the Florida Building Code
Acceptance No 14-0624.19
Expiration Date Sept 9, 2019
By Manuel Jorge
Miami Dade Product Control

ENGINEER STAMP

Florida Firm No. F-02000005175
Certificate of Authorization #9803
Ethan A. Charpentier
Registration No. 65106

Harmon

HI 7000 LARGE MISSILE MULLION APPLICATIONS
LOAD TABLES SINGLE SPAN

DATE: 06/28/04	3 3/16/09
1 11/18/08	4 5/22/12
2 3/10/09	5 10/03/14

DWG. NO. HI7000LM

L:\EngineeringSales\Systems\Hurricane System\09-23-2014 NOA Dwg Revisions\HI7000 LMI 2010 FBC\011_HI7000_lm.dwg - dbenson - 10/3/2014 9:46 AM

TWIN SPAN APPLICATION

REINIFORCING OPTIONS → 1 2 3 4 5 6 7

	"B"	Case 1 "L"/"R"	Case 2 "L"/"R"	Case 3 "L"/"R"	Case 4 "L"/"R"	Case 5 "L"/"R"	Case 6 "L"/"R"	Case 7 "L"/"R"
UP TO MAXIMUM 60 PSF POS. OR NEG. LOAD	3' 0"	12'-8"	14'-7"	14'-7"	14'-7"	14'-7"	14'-7"	14'-7"
	RE	872	1006	1006	1006	1006	1006	1006
	RM	2781	3209	3209	3209	3209	3209	3209
	4' 0"	10'-11"	13'-6"	14'-7"	14'-7"	14'-7"	14'-7"	14'-7"
	RE	1007	1238	1342	1342	1342	1342	1342
	RM	3211	3946	4278	4278	4278	4278	4278
	5' 0"	9'-10"	12'-1"	14'-5"	14'-7"	14'-7"	14'-7"	14'-7"
	RE	1126	1384	1658	1677	1677	1677	1677
	RM	3590	4411	5288	5348	5348	5348	5348
	6' 0"	8'-11"	11'-0"	13'-2"	14'-7"	14'-7"	14'-7"	14'-7"
	RE	1233	1516	1817	2012	2012	2012	2012
	RM	3932	4832	5793	6417	6417	6417	6417
UP TO MAXIMUM 70 PSF POS. OR NEG. LOAD	3' 0"	11'-9"	14'-5"	14'-7"	14'-7"	14'-7"	14'-7"	14'-7"
	RE	942	1158	1174	1174	1174	1174	1174
	RM	3003	3691	3744	3744	3744	3744	3744
	4' 0"	10'-2"	12'-6"	14'-7"	14'-7"	14'-7"	14'-7"	14'-7"
	RE	1088	1337	1565	1565	1565	1565	1565
	RM	3468	4262	4991	4991	4991	4991	4991
	5' 0"	9'-1"	11'-2"	13'-4"	14'-7"	14'-7"	14'-7"	14'-7"
	RE	1216	1494	1791	1957	1957	1957	1957
	RM	3877	4765	5712	6239	6239	6239	6239
	6' 0"	8'-3"	10'-2"	12'-2"	13'-10"	14'-2"	14'-7"	14'-7"
	RE	1332	1637	1962	2229	2283	2348	2348
	RM	4247	5219	6257	7106	7278	7487	7487
UP TO MAXIMUM 80 PSF POS. OR NEG. LOAD	3' 0"	10'-11"	13'-6"	14'-7"	14'-7"	14'-7"	14'-7"	14'-7"
	RE	1007	1238	1342	1342	1342	1342	1342
	RM	3211	3946	4278	4278	4278	4278	4278
	4' 0"	9'-6"	11'-8"	14'-0"	14'-7"	14'-7"	14'-7"	14'-7"
	RE	1163	1429	1713	1789	1789	1789	1789
	RM	3707	4556	5462	5704	5704	5704	5704
	5' 0"	8'-6"	10'-5"	12'-6"	14'-3"	14'-7"	14'-7"	14'-7"
	RE	1300	1597	1915	2175	2228	2236	2236
	RM	4145	5094	6106	6935	7103	7130	7130
	6' 0"	7'-9"	9'-6"	11'-5"	13'-0"	13'-3"	14'-7"	14'-7"
	RE	1424	1750	2098	2382	2440	2683	2683
	RM	4540	5580	6689	7597	7781	8556	8556
UP TO MAXIMUM 90 PSF POS. OR NEG. LOAD	3' 0"	10'-4"	12'-8"	14'-7"	14'-7"	14'-7"	14'-7"	14'-7"
	RE	1068	1313	1509	1509	1509	1509	1509
	RM	3405	4185	4813	4813	4813	4813	4813
	4' 0"	8'-11"	11'-0"	13'-2"	14'-7"	14'-7"	14'-7"	14'-7"
	RE	1233	1516	1817	2012	2012	2012	2012
	RM	3932	4832	5793	6417	6417	6417	6417
	5' 0"	8'-0"	9'-10"	11'-9"	13'-5"	13'-9"	14'-7"	14'-7"
	RE	1379	1694	2031	2307	2363	2515	2515
	RM	4396	5402	6477	7356	7534	8021	8021
	6' 0"	7'-3"	9'-0"	10'-9"	12'-3"	12'-6"	14'-7"	14'-7"
	RE	1510	1856	2225	2527	2588	3018	3018
	RM	4816	5918	7095	8058	8253	9625	9625

REINIFORCING OPTIONS → 1 2 3 4 5 6 7

	"B"	Case 1 "L"/"R"	Case 2 "L"/"R"	Case 3 "L"/"R"	Case 4 "L"/"R"	Case 5 "L"/"R"	Case 6 "L"/"R"	Case 7 "L"/"R"
UP TO MAXIMUM 100 PSF POS. OR NEG. LOAD	3' 0"	9'-10"	12'-1"	14'-5"	14'-7"	14'-7"	14'-7"	14'-7"
	RE	1126	1384	1658	1677	1677	1677	1677
	RM	3590	4411	5288	5348	5348	5348	5348
	4' 0"	8'-6"	10'-5"	12'-6"	14'-3"	14'-7"	14'-7"	14'-7"
	RE	1300	1597	1915	2175	2228	2236	2236
	RM	4145	5094	6106	6935	7103	7130	7130
	5' 0"	7'-7"	9'-4"	11'-2"	12'-8"	13'-0"	14'-7"	14'-7"
	RE	1453	1786	2141	2432	2490	2795	2795
	RM	4634	5695	6827	7754	7941	8912	8912
	6' 0"	6'-11"	8'-6"	10'-2"	11'-7"	11'-11"	14'-3"	14'-7"
	RE	1592	1956	2345	2664	2728	3266	3354
	RM	5076	6238	7478	8494	8699	10414	10695
UP TO MAXIMUM 110 PSF POS. OR NEG. LOAD	3' 0"	9'-4"	11'-6"	13'-9"	14'-7"	14'-7"	14'-7"	14'-7"
	RE	1181	1451	1739	1845	1845	1845	1845
	RM	3765	4626	5546	5882	5882	5882	5882
	4' 0"	8'-1"	9'-11"	11'-11"	13'-7"	13'-11"	14'-7"	14'-7"
	RE	1363	1675	2008	2281	2336	2460	2460
	RM	4347	5342	6404	7274	7449	7843	7843
	5' 0"	7'-3"	8'-11"	10'-8"	12'-1"	12'-5"	14'-7"	14'-7"
	RE	1524	1873	2245	2550	2612	3074	3074
	RM	4860	5973	7160	8132	8329	9804	9804
	6' 0"	6'-7"	8'-1"	9'-9"	11'-1"	11'-4"	13'-7"	14'-5"
	RE	1670	2052	2460	2794	2861	3425	3634
	RM	5324	6543	7843	8908	9124	10922	11587
UP TO MAXIMUM 110 PSF POS. OR 120 PSF NEG. LOAD	3' 0"	8'-11"	11'-0"	13'-2"	14'-7"	14'-7"	14'-7"	14'-7"
	RE	1233	1516	1817	2012	2012	2012	2012
	RM	3932	4832	5793	6417	6417	6417	6417
	4' 0"	7'-9"	9'-6"	11'-5"	13'-0"	13'-3"	14'-7"	14'-7"
	RE	1424	1750	2098	2382	2440	2683	2683
	RM	4540	5580	6689	7597	7781	8556	8556
	5' 0"	6'-11"	8'-6"	10'-2"	11'-7"	11'-11"	14'-3"	14'-7"
	RE	1592	1956	2345	2664	2728	3266	3354
	RM	5076	6238	7478	8494	8699	10414	10695
	6' 0"	6'-4"	7'-9"	9'-4"	10'-7"	10'-10"	13'-0"	13'-2"
	RE	1744	2143	2569	2918	2988	3577	3634
	RM	5561	6834	8192	9304	9529	11408	11587
UP TO MAXIMUM 110 PSF POS. OR 130 PSF NEG. LOAD	3' 0"	8'-7"	10'-7"	12'-8"	14'-5"	14'-7"	14'-7"	14'-7"
	RE	1284	1577	1891	2148	2180	2180	2180
	RM	4093	5029	6029	6848	6952	6952	6952
	4' 0"	7'-5"	9'-2"	11'-0"	12'-6"	12'-9"	14'-7"	14'-7"
	RE	1482	1821	2183	2480	2540	2907	2907
	RM	4726	5807	6962	7907	8098	9269	9269
	5' 0"	6'-8"	8'-2"	9'-10"	11'-2"	11'-5"	13'-8"	14'-7"
	RE	1657	2036	2441	2772	2839	3399	3633
	RM	5283	6493	7784	8840	9054	10839	11586
	6' 0"	6'-1"	7'-5"	8'-11"	10'-2"	10'-5"	12'-2"	12'-2"
	RE	1815	2231	2674	3037	3110	3634	3634
	RM	5788	7113	8527	9684	9918	11587	11587

GENERAL NOTES:

- "H" = MULLION LENGTH
- "L"= SPAN BETWEEN ANCHORS
- "B" = C/L TO C/L SPACING
- "B" = $\frac{W1 + W2}{2}$ (W1, W2)
- FOR TWIN SPAN MAXIMUM DEFL. = L/180 OR 1"
- (WHEN STEEL RIENF. IS USED, LENGTH OF STEEL IS LENGTH OF MULLION MINUS 12")
- SPANS ARE LIMITED BY MAXIMUM TESTED END REACTIONS
- RE= REACTION AT HEAD AND SILL (SEE PAGE 13)
- RM= REACTION AT MIDPOINT ANCHOR (SEE PAGE 13)

REINFORCING OPTIONS

1 — COMBINED Ix = 12.941 in⁴ — NO REINFORCING

2 — COMBINED Ix = 22.993 in⁴ — 1/4" x 5 1/2" STL BAR

3 — COMBINED Ix = 33.045 in⁴ — (2) 1/4" x 5 1/2" STL BARS

4 — COMBINED Ix = 38.751 in⁴ — C5x9

5 — COMBINED Ix = 44.714 in⁴ — C5x6.7 w/ 1/4" x 5 1/2" STL BAR

6 — COMBINED Ix = 58.254 in⁴ — 1 1/2" x 5" STL BAR

7 — COMBINED Ix = 73.538 in⁴ — 2" x 5" STL BAR

TWIN SPAN

NO "TOTAL SPAN" SHALL BE GREATER THAN 28'-4 3/4" (TESTED)

TESTED LENGTHS ARE 165 3/4" (LOWER) AND 175" (UPPER).
TOTAL LENGTH OF MULLION = (H)

$(H) = \left(\frac{\text{CHART "L"}}{1.028}\right) 2$

THESE LENGTHS ARE BASED ON THE TESTED "TWIN-SPAN" LENGTH RATIOS.

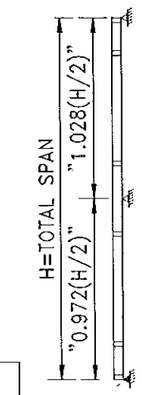

CENTER ANCHOR IS PERMITTED TO BE LOCATED @ H/2 +/- 2.8% (H/2)

ETHAN A. CHARPENTIER LICENSE No 65106 STATE OF FLORIDA PROFESSIONAL ENGINEER

OCT 0 9 2014

Larson Engineering, Inc.
3524 Laboure Road
White Bear Lake, MN 55110
(P) 651.481.9120 (F) 651.481.9201

DADE CO. STAMP

PRODUCT REVISED
as complying with the Florida Building Code
Acceptance No 14-0624.19
Expiration Date Sept. 6, 2019
By Manuel Perez
Miami Dade Product Control

ENGINEER STAMP

Florida Firm No. F-02000005175
Certificate of Authorization #9803
Ethan A. Charpentier
Registration No. 65106

Harmon

HI 7000 LARGE MISSILE MULLION APPLICATIONS LOAD TABLES

DATE: 06/28/04 | 3 3/16/09
1 11/18/08 | 4 5/22/12
2 3/10/09 | 5 10/03/14

DWG. NO. HI7000LM

L:\EngineeringSales\Systems\Hurricane System\09-23-2014 NOA Dwg Revisions\HI7000 LMI 2010 FBC\012_HI7000_lm.dwg - dbenson - 10/3/2014 9:46 AM

TWIN SPAN w/ STACK RAIL APPLICATION

REINFORCING OPTIONS → 1 2 3 4 5 6 7

Load	"B"		Case 1 "L"/"R"	Case 2 "L"/"R"	Case 3 "L"/"R"	Case 4 "L"/"R"	Case 5 "L"/"R"	Case 6 "L"/"R"	Case 7 "L"/"R"
UP TO MAXIMUM 60 PSF POS. OR NEG. LOAD	3' 0"		12'-5"	16'-5"	17'-11"	18'-8"	19'-4"	20'-8"	21'-11"
		RE	931	1224	1340	1394	1445	1544	1636
		RM	2635	3464	3793	3947	4090	4370	4629
		D	497	653	715	744	771	823	872
	4' 0"		10'-9"	14'-4"	16'-8"	17'-3"	17'-3"	17'-3"	17'-3"
		RE	1075	1433	1663	1716	1716	1716	1716
		RM	3043	4056	4706	4857	4857	4857	4857
		D	573	764	887	915	915	915	915
	5' 0"		9'-8"	12'-10"	13'-9"	13'-9"	13'-9"	13'-9"	13'-9"
		RE	1202	1602	1716	1716	1716	1716	1716
		RM	3402	4534	4857	4857	4857	4857	4857
		D	641	854	915	915	915	915	915
	6' 0"		8'-9"	11'-6"	11'-6"	11'-6"	11'-6"	11'-6"	11'-6"
		RE	1317	1716	1716	1716	1716	1716	1716
		RM	3726	4857	4857	4857	4857	4857	4857
		D	702	915	915	915	915	915	915
UP TO MAXIMUM 70 PSF POS. OR NEG. LOAD	3' 0"		11'-6"	15'-4"	17'-3"	17'-11"	18'-7"	19'-11"	21'-1"
		RE	1006	1340	1504	1565	1622	1733	1836
		RM	2846	3794	4257	4430	4592	4906	5197
		D	460	613	688	716	742	792	839
	4' 0"		10'-0"	13'-4"	16'-0"	16'-8"	17'-3"	17'-3"	17'-3"
		RE	1161	1548	1855	1942	2002	2002	2002
		RM	3286	4380	5251	5497	5666	5666	5666
		D	531	708	848	888	915	915	915
	5' 0"		8'-11"	11'-11"	13'-9"	13'-9"	13'-9"	13'-9"	13'-9"
		RE	1298	1730	2002	2002	2002	2002	2002
		RM	3674	4897	5666	5666	5666	5666	5666
		D	594	791	915	915	915	915	915
	6' 0"		8'-2"	10'-10"	11'-6"	11'-6"	11'-6"	11'-6"	11'-6"
		RE	1422	1895	2002	2002	2002	2002	2002
		RM	4025	5365	5666	5666	5666	5666	5666
		D	650	866	915	915	915	915	915
UP TO MAXIMUM 80 PSF POS. OR NEG. LOAD	3' 0"		10'-9"	14'-4"	16'-8"	17'-4"	18'-0"	19'-3"	20'-5"
		RE	1075	1433	1663	1730	1793	1916	2029
		RM	3043	4056	4706	4897	5075	5422	5744
		D	430	573	665	692	717	766	812
	4' 0"		9'-4"	12'-5"	14'-11"	16'-2"	16'-9"	17'-3"	17'-3"
		RE	1241	1655	1983	2147	2225	2288	2288
		RM	3513	4683	5614	6076	6297	6475	6475
		D	497	662	793	859	890	915	915
	5' 0"		8'-4"	11'-2"	13'-4"	13'-9"	13'-9"	13'-9"	13'-9"
		RE	1388	1850	2217	2288	2288	2288	2288
		RM	3928	5236	6276	6475	6475	6475	6475
		D	555	740	887	915	915	915	915
	6' 0"		7'-7"	10'-2"	11'-6"	11'-6"	11'-6"	11'-6"	11'-6"
		RE	1520	2026	2288	2288	2288	2288	2288
		RM	4303	5735	6475	6475	6475	6475	6475
		D	608	811	915	915	915	915	915
UP TO MAXIMUM 90 PSF POS. OR NEG. LOAD	3' 0"		10'-2"	13'-7"	16'-2"	16'-10"	17'-6"	18'-8"	19'-9"
		RE	1140	1520	1816	1890	1959	2093	2217
		RM	3227	4302	5140	5349	5544	5923	6274
		D	406	541	646	672	697	744	788
	4' 0"		8'-9"	11'-9"	14'-1"	15'-3"	16'-3"	17'-3"	17'-3"
		RE	1317	1755	2104	2278	2430	2574	2574
		RM	3726	4967	5954	6448	6879	7285	7285
		D	468	624	748	810	864	915	915
	5' 0"		7'-10"	10'-6"	12'-7"	13'-8"	13'-9"	13'-9"	13'-9"
		RE	1472	1962	2352	2547	2574	2574	2574
		RM	4166	5553	6657	7209	7285	7285	7285
		D	524	698	836	906	915	915	915
	6' 0"		7'-2"	9'-7"	11'-6"	11'-6"	11'-6"	11'-6"	11'-6"
		RE	1612	2149	2574	2574	2574	2574	2574
		RM	4564	6083	7285	7285	7285	7285	7285
		D	573	764	915	915	915	915	915

REINFORCING OPTIONS → 1 2 3 4 5 6 7

Load	"B"		Case 1 "L"/"R"	Case 2 "L"/"R"	Case 3 "L"/"R"	Case 4 "L"/"R"	Case 5 "L"/"R"	Case 6 "L"/"R"	Case 7 "L"/"R"
UP TO MAXIMUM 100 PSF POS. OR NEG. LOAD	3' 0"		9'-8"	12'-10"	15'-5"	16'-5"	17'-0"	18'-2"	19'-3"
		RE	1202	1602	1920	2045	2120	2265	2399
		RM	3402	4534	5436	5789	6000	6410	6790
		D	385	513	615	655	678	725	768
	4' 0"		8'-4"	11'-2"	13'-4"	14'-5"	15'-6"	16'-11"	17'-3"
		RE	1388	1850	2217	2401	2579	2810	2860
		RM	3928	5236	6276	6797	7301	7953	8094
		D	444	592	710	768	825	899	915
	5' 0"		7'-5"	9'-11"	11'-11"	12'-11"	13'-9"	13'-9"	13'-9"
		RE	1552	2068	2479	2685	2860	2860	2860
		RM	4391	5853	7017	7599	8094	8094	8094
		D	497	662	793	859	915	915	915
	6' 0"		6'-10"	9'-1"	10'-11"	11'-6"	11'-6"	11'-6"	11'-6"
		RE	1700	2265	2716	2860	2860	2860	2860
		RM	4811	6412	7687	8094	8094	8094	8094
		D	544	725	869	915	915	915	915
UP TO MAXIMUM 110 PSF POS. OR NEG. LOAD	3' 0"		9'-2"	12'-3"	14'-8"	15'-11"	16'-7"	17'-9"	18'-10"
		RE	1261	1680	2014	2181	2277	2432	2577
		RM	3568	4755	5701	6173	6444	6885	7293
		D	367	489	586	635	662	708	750
	4' 0"		7'-11"	10'-7"	12'-9"	13'-9"	14'-10"	16'-6"	17'-3"
		RE	1456	1940	2326	2518	2705	3018	3145
		RM	4120	5491	6583	7128	7657	8543	8904
		D	424	565	677	733	787	876	915
	5' 0"		7'-1"	9'-6"	11'-4"	12'-4"	13'-3"	13'-9"	13'-9"
		RE	1627	2169	2600	2816	3024	3145	3145
		RM	4606	6139	7360	7970	8561	8904	8904
		D	474	631	756	819	880	915	915
	6' 0"		6'-6"	8'-8"	10'-5"	11'-3"	11'-6"	11'-6"	11'-6"
		RE	1783	2376	2848	3084	3145	3145	3145
		RM	5045	6725	8062	8730	8904	8904	8904
		D	519	691	829	897	915	915	915
UP TO MAXIMUM 110 PSF POS. OR 120 PSF NEG. LOAD	3' 0"		8'-9"	11'-9"	14'-1"	15'-3"	16'-3"	17'-5"	18'-5"
		RE	1317	1755	2104	2278	2430	2596	2750
		RM	3726	4967	5954	6448	6879	7349	7785
		D	351	468	561	608	648	692	734
	4' 0"		7'-7"	10'-2"	12'-2"	13'-2"	14'-2"	16'-2"	17'-2"
		RE	1520	2026	2429	2630	2825	3221	3413
		RM	4303	5735	6875	7445	7998	9119	9660
		D	406	541	648	702	754	859	910
	5' 0"		6'-10"	9'-1"	10'-11"	11'-10"	12'-8"	13'-9"	13'-9"
		RE	1700	2265	2716	2941	3159	3431	3431
		RM	4811	6412	7687	8324	8942	9713	9713
		D	453	604	724	784	842	915	915
	6' 0"		6'-2"	8'-3"	9'-11"	10'-9"	11'-6"	11'-6"	11'-6"
		RE	1862	2482	2975	3221	3431	3431	3431
		RM	5270	7024	8420	9119	9713	9713	9713
		D	497	662	793	859	915	915	915
UP TO MAXIMUM 110 PSF POS. OR 130 PSF NEG. LOAD	3' 0"		8'-5"	11'-3"	13'-6"	14'-8"	15'-9"	17'-0"	18'-1"
		RE	1370	1826	2190	2371	2547	2757	2920
		RM	3879	5170	6197	6711	7209	7804	8267
		D	338	450	539	584	627	679	719
	4' 0"		7'-4"	9'-9"	11'-8"	12'-8"	13'-7"	15'-7"	16'-9"
		RE	1582	2109	2528	2738	2941	3357	3624
		RM	4478	5969	7156	7749	8324	9501	10257
		D	390	519	622	674	724	826	892
	5' 0"		6'-6"	8'-9"	10'-6"	11'-4"	12'-2"	13'-9"	13'-9"
		RE	1769	2358	2827	3061	3288	3717	3717
		RM	5007	6674	8001	8664	9307	10522	10522
		D	436	581	696	754	809	915	915
	6' 0"		5'-11"	7'-11"	9'-7"	10'-4"	11'-1"	11'-6"	11'-6"
		RE	1938	2583	3096	3353	3602	3717	3717
		RM	5485	7311	8764	9491	10195	10522	10522
		D	477	636	762	825	887	915	915

GENERAL NOTES:

- "L" = DISTANCE BETWEEN ANCHORS
- "B" = C/L TO C/L SPACING
- "B" = $\frac{W1 + W2}{2}$ (W1, W2)
- FOR TWIN SPAN MAXIMUM DEFL. = L/180 OR 1"
- (WHEN STEEL RIENF. IS USED, LENGTH OF STEEL IS LENGTH OF MULLION MINUS 12")
- SPANS ARE LIMITED BY MAXIMUM TESTED END REACTIONS
- RE= REACTION AT HEAD AND SILL (SEE PAGE 13)
- RM= REACTION AT MIDPOINT ANCHOR (SEE PAGE 13)
- D= DEADLOAD REACTION (SEE PAGE 13)

TWIN SPAN w/ STACK RAIL

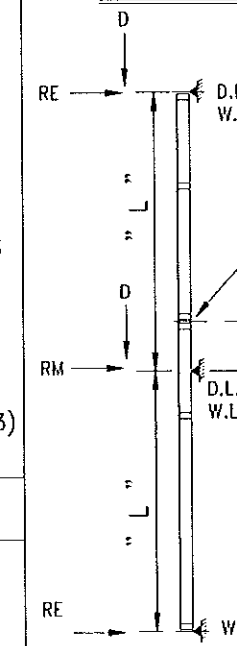

CHART IS FOR EQUAL "L" DIMS. ON ALL SPANS AND IDEAL DIM.

IDEAL DIM. IS 17% OF "L"+/- 4"

REINFORCING OPTIONS

1 — COMBINED Ix = 12.941 in⁴ — NO REINFORCING

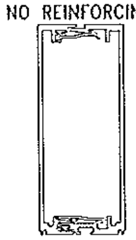

2 — COMBINED Ix = 22.993 in⁴ — 1/4" x 5 1/2" STL BAR

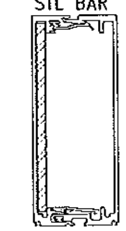

3 — COMBINED Ix = 33.045 in⁴ — (2) 1/4" x 5 1/2" STL BARS

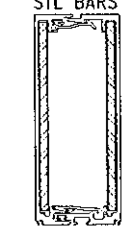

4 — COMBINED Ix = 38.751 in⁴ — C5x9

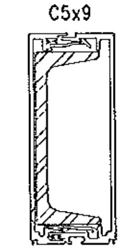

5 — COMBINED Ix = 44.714 in⁴ — C5x6.7 w/ 1/4" x 5 1/2" STL BAR

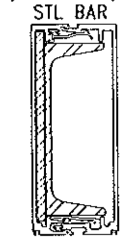

6 — COMBINED Ix = 58.254 in⁴ — 1 1/2" x 5" STL BAR

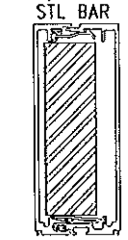

7 — COMBINED Ix = 73.538 in⁴ — 2" x 5" STL BAR

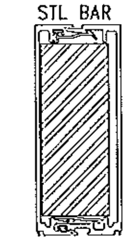

ETHAN A. CHARPENTIER LICENSE No. 65106 STATE OF FLORIDA PROFESSIONAL ENGINEER

Larson Engineering, Inc.
3524 Labore Road
White Bear Lake, MN 55110
(P) 651.481.9120 (F) 651.481.9201

OCT 0 9 2014

DADE CO. STAMP

PRODUCT REVISED as complying with the Florida Building Code
Acceptance No 14-0624.19
Expiration Date Sept 8, 2019
By
Miami Dade Product Control

ENGINEER STAMP

Florida Firm No. F-02000005175
Certificate of Authorization #9803
Ethan A. Charpentier
Registration No. 65106

Harmon

HI 7000 LARGE MISSILE MULLION APPLICATIONS

LOAD TABLES

DATE: 06/28/04	3 3/16/09
1 11/18/08	4 5/22/12
2 3/10/09	5 10/03/14

DWG. NO. HI7000LM

L:\EngineeringSales\Systems\Hurricane System\09-23-2014 NOA Dwg Revisions\HI7000 LMI 2010 FBC\013_HI7000_lm.dwg - dbenson - 10/3/2014 9:46 AM

ANCHOR TYPE / SUBSTRATE	STRAP ANCHOR	THRU-FRAME ANCHOR	STEEL ANGLES IN VERTICAL	ALUMIMUN LUGS IN VERTICAL	TWIN SPAN MID-SPAN ANCHOR	TWIN-SPAN w/ STACK HORIZ. INTER. ANCHOR	JAMB ANCHOR
WOOD	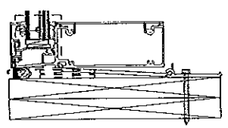	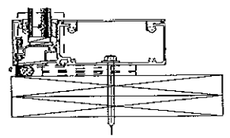	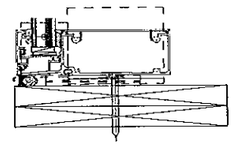	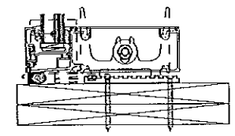			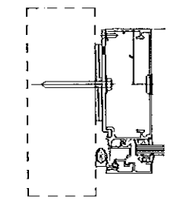
CONC.	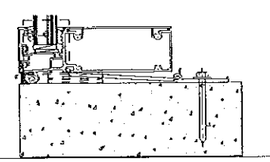	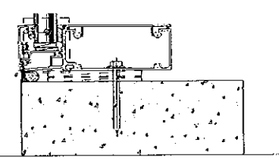	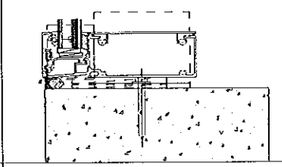	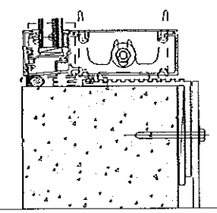	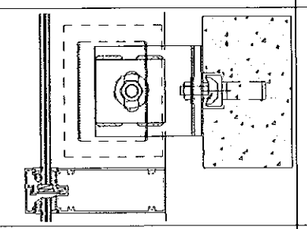	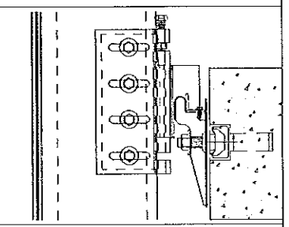	MAXIMUM END REACTION (1) STRAP-5" LONG = 1870# SEE DETAIL 1/22
STEEL	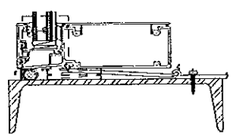	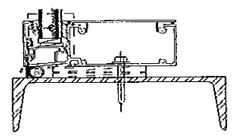	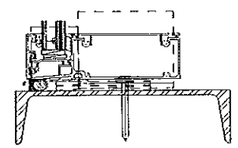	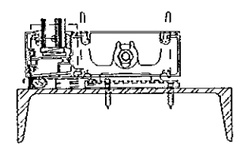	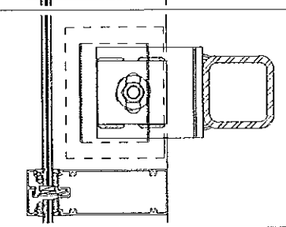	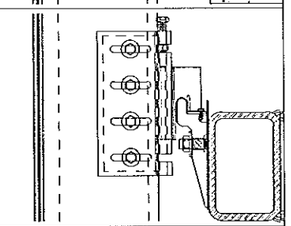	
METAL STUD	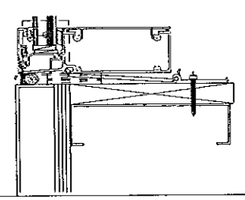	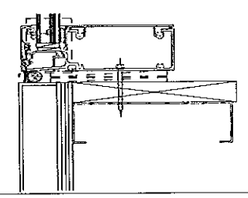	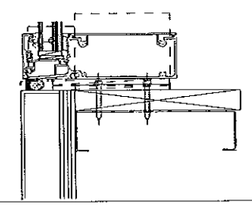	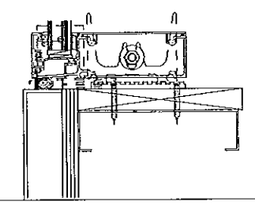			
	MAXIMUM END REACTION (2) STRAPS-8" LONG = 2,715# SEE SHEET 19 FOR DETAILS	MAXIMUM END REACTION = 1,345# SEE SHEET 19 FOR DETAILS	MAXIMUM END REACTION (2) ANGLES = 4,520# TYP. ANGLES w/ (2) FASTENERS REIN. ANGLES w/ (1) FASTENER SEE SHEET 20 FOR DETAILS	MAXIMUM END REACTION = 2,715# (PER TEST ELEV. 12) SEE SHEET 20 FOR DETAILS	MAXIMUM WL REACTION = 8,890# SEE SHEET 21 FOR DETAILS	MAXIMUM WL REACTION 13 1/2" LONG = 10,500# 8" LONG = 5,890# SEE SHEET 21 FOR DETAILS	

ETHAN A. CHARPENTIER
LICENSE
No. 65106
STATE OF FLORIDA
PROFESSIONAL ENGINEER
OCT 0 9 2014

Larson Engineering, Inc.
3524 Labore Road
White Bear Lake, MN 55110
(P) 651.481.9120 (F) 651.481.9201

GENERAL NOTES:

- SIZES OF ANCHOR COMPONENTS LISTED ABOVE ARE A MINIMUM, BASED ON MOCKUP CALCULATIONS COMPLYING WITH CURRENT FBC
- ACTUAL LENGTH AND NUMBER & SIZE OF HOLES TO BE DETERMINED BY PROJECT SPECIFIC PERIMETER CONDITIONS AND TYPES OF FASTENERS USED.

CORNER ANCHORS

- SILL / HEAD REACTION=
  <= 3100 LBS. SEE DETAIL 24 ON 38
- INTERMEDIATE D.L. REACTION=
  <= 2890 LBS. D.L. SEE DETAIL 22 ON 36
  <= 850 LBS. W.L. SEE DETAIL 22 ON 36
- INTERMEDIATE W.L. ONLY REACTION=
  < 2890 LBS. SEE DETAIL 23 ON 37

DADE CO. STAMP

PRODUCT REVISED
as complying with the Florida
Building Code
Acceptance No 14-0624.19
Expiration Date Sept 2, 2019
By Miami Dade Product Control

ENGINEER STAMP

Florida Firm No. F-02000005175
Certificate of Authorization #9803
Ethan A. Charpentier
Registration No. 65106

Harmon

HI 7000 LARGE MISSILE
ANCHOR APPLICATIONS

DATE: 06/28/04	3 3/16/09
1 11/18/08	4 5/22/12
2 3/10/09	5 10/03/14

DWG. NO. HI7000LM

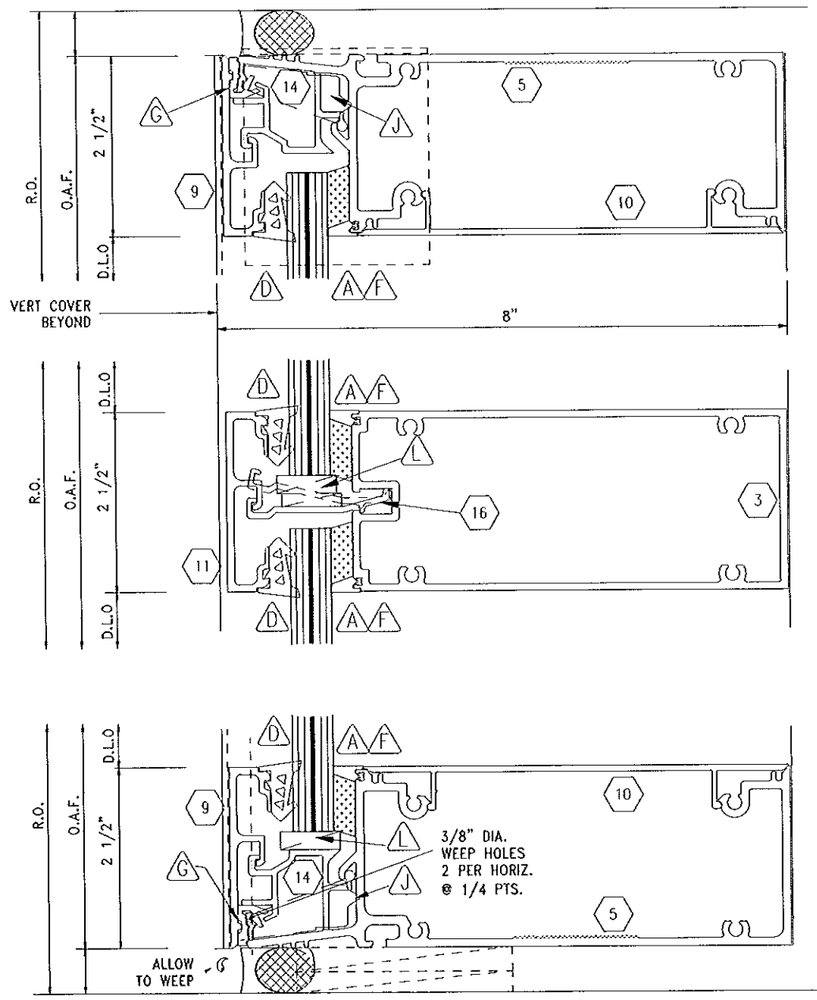

1/14

2/14

3/14

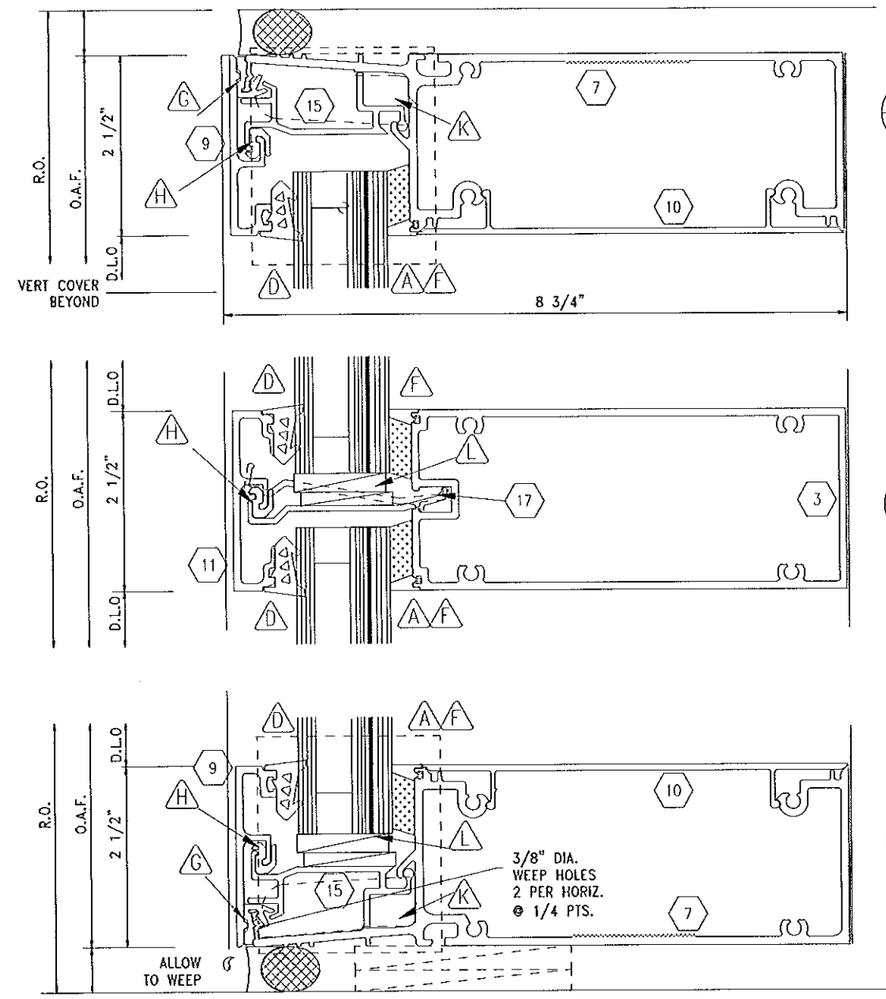

4/14

5/14

6/14

ETHAN A. CHARPENTIER
LICENSE
No. 65106
STATE OF FLORIDA
PROFESSIONAL ENGINEER

OCT 0 9 2014

Larson Engineering, Inc.
3524 Labore Road
White Bear Lake, MN 55110
(P) 651.481.9120 (F) 651.481.9201

GENERAL NOTES:

- FOR ANCHOR DETAILS REFER TO SHEET 13
- FOR PART IDENTIFICATION REFER TO SHEET 2
  - ◯ FASTENERS
  - △ GASKETS
  - ⬡ ALUMINUM EXTRUSIONS
- FOR GLAZING DETAILS, GLASS BITE & GASKET CONFIGURATIONS SEE SHEET 3.

DADE CO. STAMP

PRODUCT REVISED
as complying with the Florida Building Code
Acceptance No 14-0624.19
Expiration Date Sept. 2, 2019
By Manuel Perez
Miami Dade Product Control

ENGINEER STAMP

Florida Firm No. F-02000005175
Certificate of Authorization #9803
Ethan A. Charpentier
Registration No. 65106

Harmon

HI 7000 LARGE MISSILE
HORIZONTAL DETAILS

DATE: 06/28/04	3 3/16/09
1 11/18/08	4 5/22/12
2 3/10/09	5 10/03/14

DWG. NO. HI7000LM

SHEET 14 OF 41

L:\EngineeringSales\Systems\Hurricane System\09-23-2014 NOA Dwg Revisions\HI7000 LMI 2010 FBC\014_HI7000_lm.dwg - dbenson - 10/3/2014 9:46 AM

L:\EngineeringSales\Systems\Hurricane System\09-23-2014 NOA Dwg Revisions\HI7000 LMI 2010 FBC\015_HI7000_lm.dwg - dbenson - 10/3/2014 9:46 AM

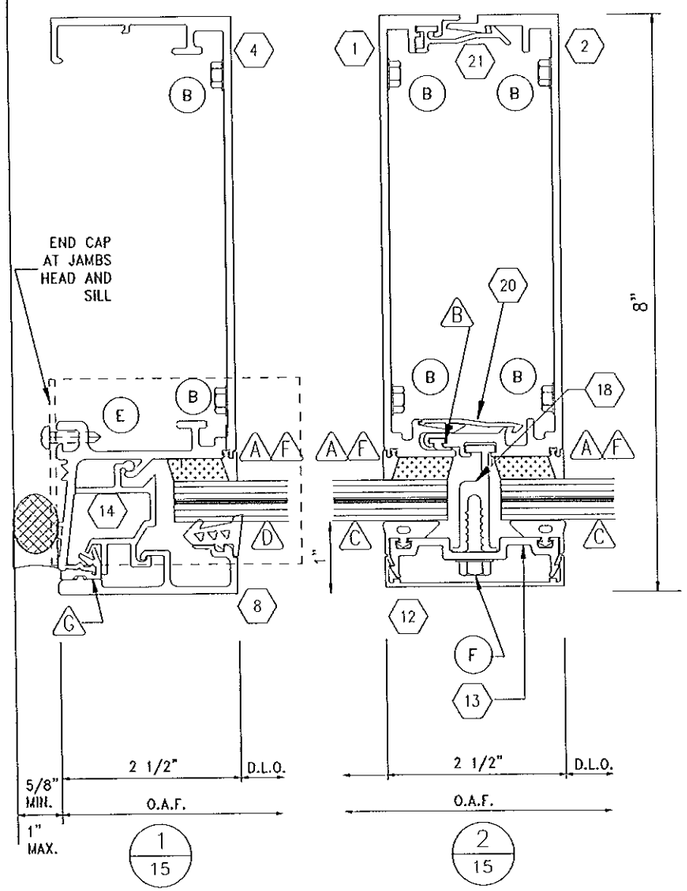

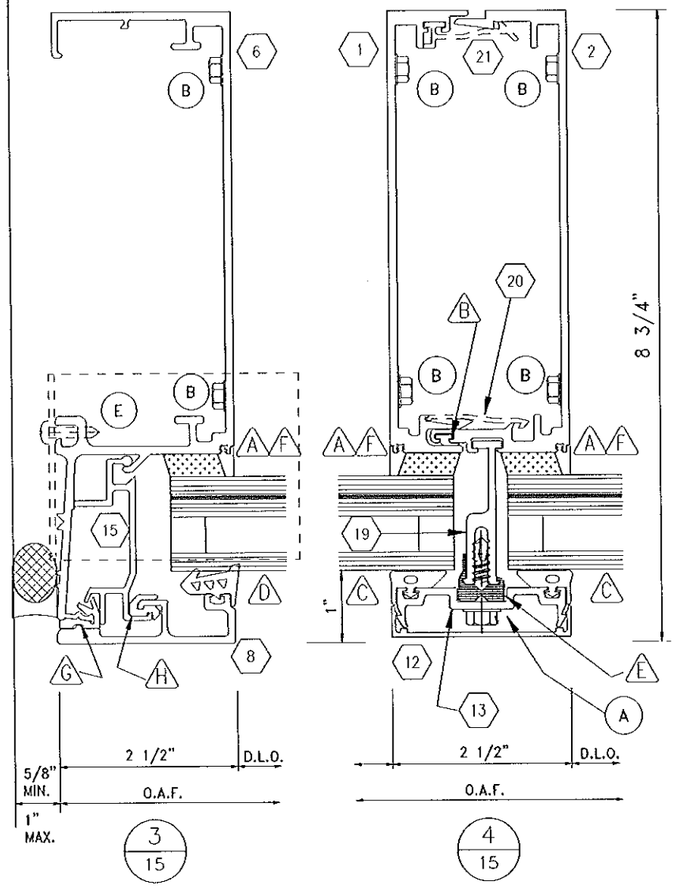

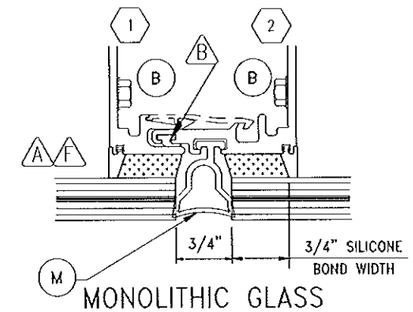

MONOLITHIC GLASS GASKETED VERTICAL JOINT

5/15

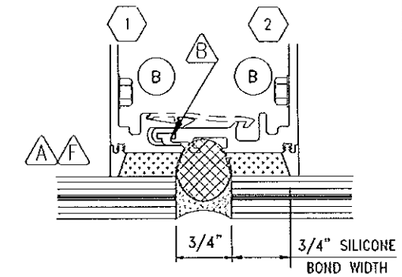

MONOLITHIC GLASS SILICONED VERTICAL JOINT

6/15

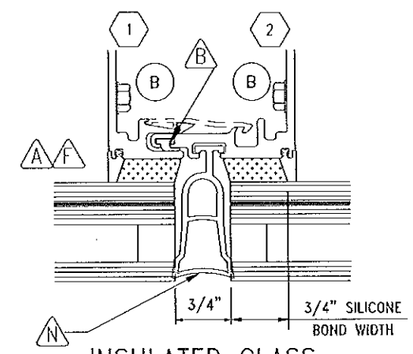

INSULATED GLASS GASKETED VERTICAL JOINT

7/15

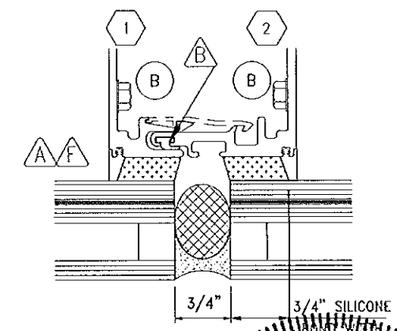

INSULATED GLASS SILICONED VERTICAL JOINT

8/15

SILICONE OR GASKET GLASS JOINT DESIGN:

SILICONE OF GASKET GLASS JOINT DESIGN TESTED TO 90 PSF.

DETERMINE THE DESIGNED WINDLOAD AND THE SMALLEST LEG OF THE LARGEST LITE OF GLASS FOR THE PROJECT.

FOLLOW THE CHART FOR THE 3/4" SILICONE BOND WIDTH TO DETERMINE IF YOUR GLASS SIZE IS ACCEPTABLE FOR THE PROJECT.

IF YOUR SIZE AND WINDLOAD ARE NOT APPROVED, CONSULT THE ARCHITECT OR ENGINEER OF OPTIONS.

3/4" Silicone Bond Width Chart

	Smallest leg of largest lite of glass								
Windload	24"	30"	36"	42"	48"	54"	60"	66"	72"
20 PSF	3/4" OK	3/4" OK	3/4" OK	3/4" OK	3/4" OK	3/4" OK	3/4" OK	3/4" OK	3/4" OK
30 PSF	3/4" OK	3/4" OK	3/4" OK	3/4" OK	3/4" OK	3/4" OK	3/4" OK	3/4" OK	3/4" OK
40 PSF	3/4" OK	3/4" OK	3/4" OK	3/4" OK	3/4" OK	3/4" OK	3/4" OK	3/4" OK	3/4" OK
50 PSF	3/4" OK	3/4" OK	3/4" OK	3/4" OK	3/4" OK	3/4" OK	3/4" OK	3/4" OK	3/4" OK
60 PSF	3/4" OK	3/4" OK	3/4" OK	3/4" OK	3/4" OK	3/4" OK	3/4" OK	3/4" OK	3/4" OK
70 PSF	3/4" OK	3/4" OK	3/4" OK	3/4" OK	3/4" OK	3/4" OK	3/4" OK	Not Apv'd	Not Apv'd
80 PSF	3/4" OK	3/4" OK	3/4" OK	3/4" OK	3/4" OK	3/4" OK	Not Apv'd	Not Apv'd	Not Apv'd
90 PSF	3/4" OK	3/4" OK	3/4" OK	3/4" OK	3/4" OK	Not Apv'd	Not Apv'd	Not Apv'd	Not Apv'd

GENERAL NOTES:

- FOR ANCHOR DETAILS REFER TO SHEET 13
- FOR PART IDENTIFICATION REFER TO SHEET 2
  - ◯ FASTENERS
  - △ GASKETS
  - ⬡ ALUMINUM EXTRUSIONS
- FOR GLAZING DETAILS, GLASS BITE & GASKET CONFIGURATIONS SEE SHEET 3.

Larson Engineering, Inc.
3524 Labore Road
White Bear Lake, MN 55110
(P) 651.481.9120 (F) 651.481.9201

ETHAN A. CHARPENTIER No. 65106 STATE OF FLORIDA PROFESSIONAL ENGINEER

OCT 0 9 2014

DADE CO. STAMP

PRODUCT REVISED
as complying with the Florida Building Code
Acceptance No 14-0624.19
Expiration Date Sept 2, 2019
By Miami-Dade Product Control

ENGINEER STAMP

Florida Firm No. F-02000005175
Certificate of Authorization #9803
Ethan A. Charpentier
Registration No. 65106

Harmon

HI 7000 LARGE MISSILE VERTICAL DETAILS

DATE: 06/28/04	3 3/16/09
1 11/18/08	4 5/22/12
2 3/10/09	5 10/03/14

DWG. NO. HI7000LM

SHEET 15 OF 41

L:\EngineeringSales\Systems\Hurricane System\09-23-2014 NOA Dwg Revisions\HI7000 LMI 2010 FBC\016_HI7000_lm.dwg - dbenson - 10/3/2014 9:46 AM

NOTE: SHALLOW HORIZONTALS MAY BE DESIRED TO AVOID EXPOSED EDGES AT VERTCALS DUE TO MITRE.

MAX. 90 P S F WITH THE SHORT HORIZ.

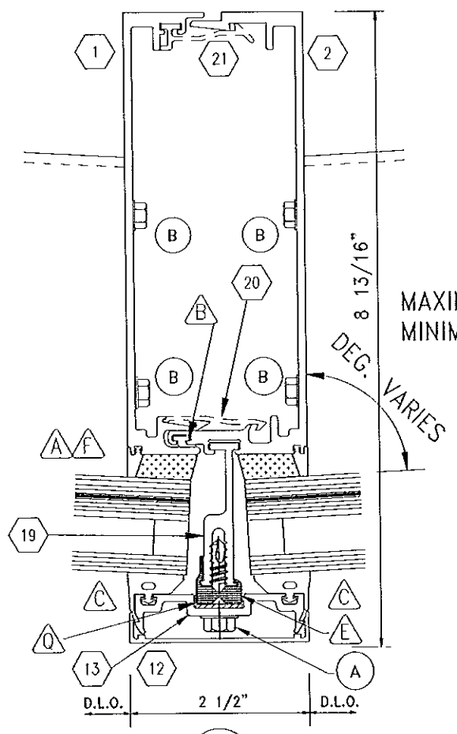

MAXIMUM 92°
MINIMUM 85°

1/16

SEGMENTED MULLION
INSULATED GLASS

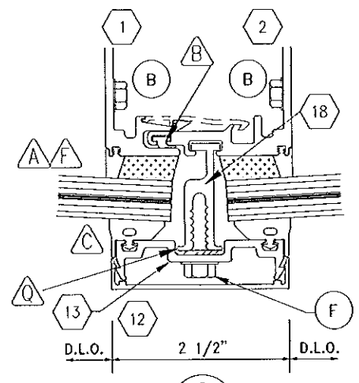

2/16

SEGMENTED MULLION
MONOLITHIC GLASS

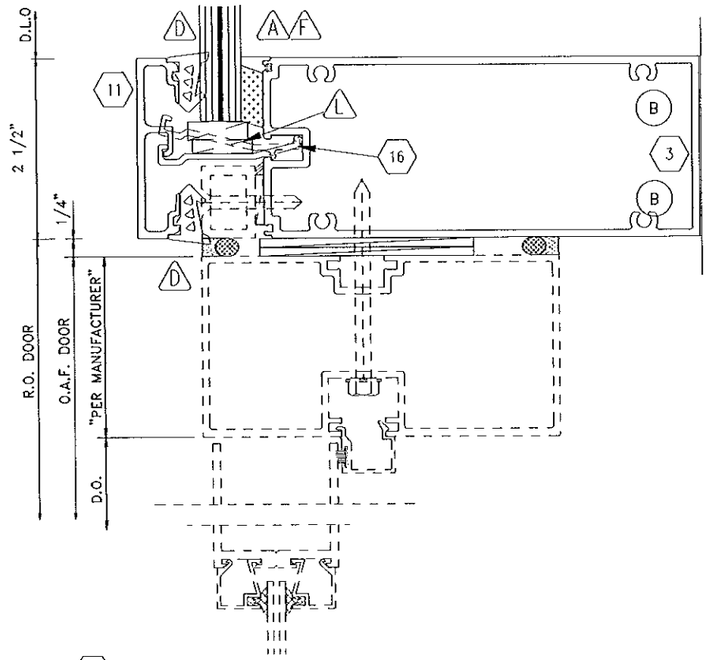

3/16

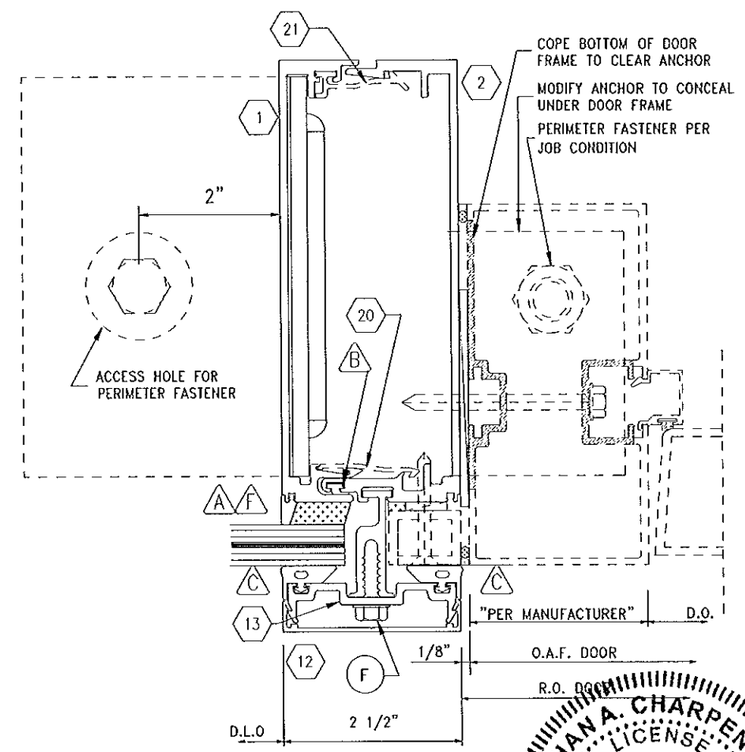

4/16

ETHAN A. CHARPENTIER
LICENSE
No. 65106
STATE OF FLORIDA
PROFESSIONAL ENGINEER

Larson Engineering, Inc.
3524 Labore Road
White Bear Lake, MN 55110
(P) 651.481.9120 (F) 651.481.9201

GENERAL NOTES:

- FOR ANCHOR DETAILS REFER TO SHEET 13
- FOR PART IDENTIFICATION REFER TO SHEET 2
  - ◯ FASTENERS
  - △ GASKETS
  - ⬡ ALUMINUM EXTRUSIONS
- FOR GLAZING DETAILS, GLASS BITE & GASKET CONFIGURATIONS SEE SHEET 3.

DADE CO. STAMP

PRODUCT REVISED
as complying with the Florida Building Code
Acceptance No 14.0624.19
Expiration Date Sept 2, 2019
By Manuel Baez
Miami-Dade Product Control

ENGINEER STAMP

Florida Firm No. F-02000005175
Certificate of Authorization #9803
Ethan A. Charpentier
Registration No. 65106

OCT 09 2014

Harmon

HI 7000 LARGE MISSILE SEGMENTED MULLION & DOOR DETAILS

DATE: 06/28/04	3 3/16/09
1 11/18/08	4 5/22/12
2 3/10/09	5 10/03/14

DWG. NO. HI7000LM

SHEET 16 OF 41

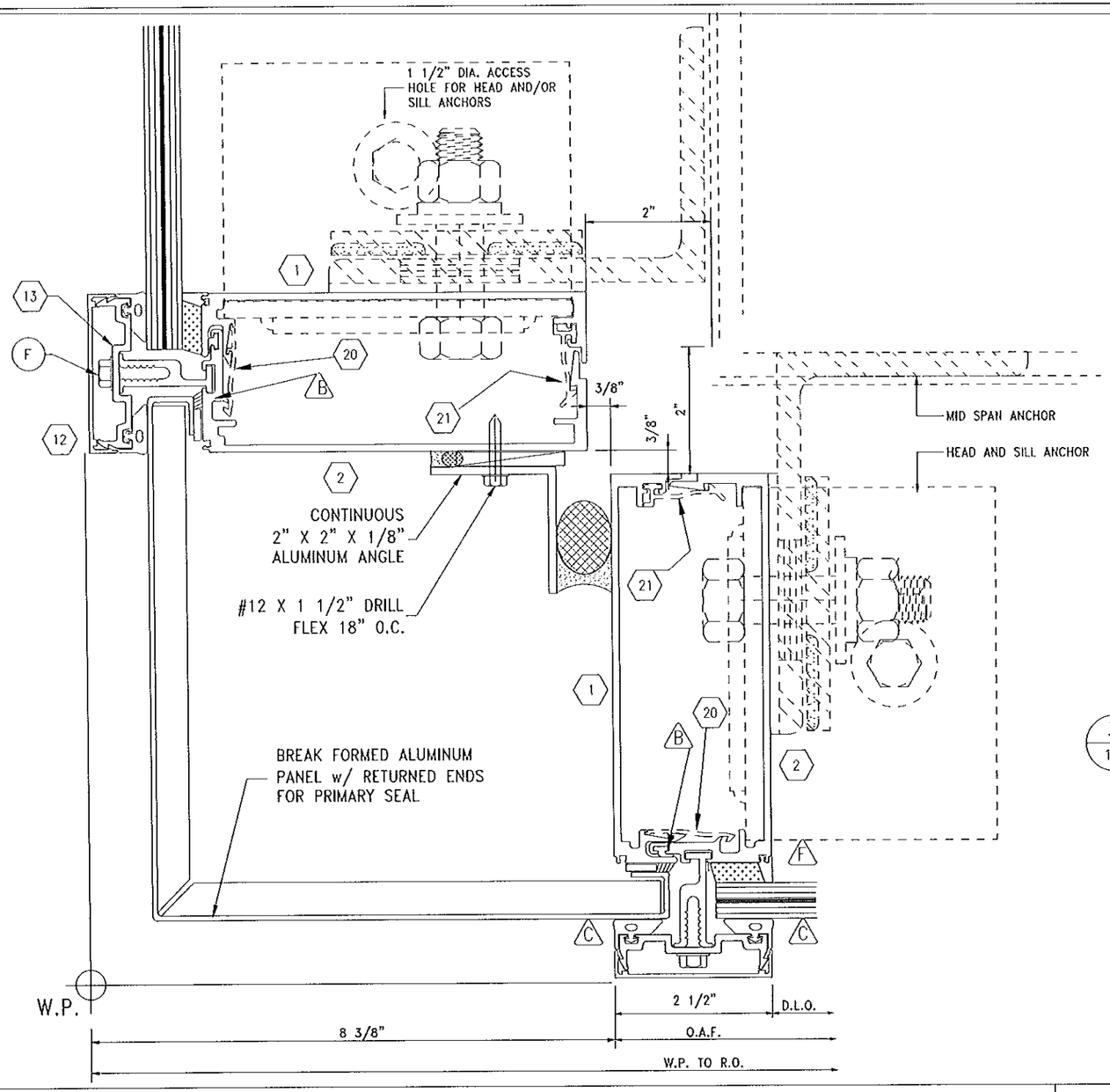

3/17

ETHAN A. CHARPENTIER
LICENSE
No. 65106
STATE OF FLORIDA
PROFESSIONAL ENGINEER

OCT 0 9 2014

Larson Engineering, Inc.
3524 Lobore Road
White Bear Lake, MN 55110
(P) 651.481.9120 (F) 651.481.9201

GENERAL NOTES:

- FOR PART IDENTIFICATION REFER TO SHEET 2
- FOR GLAZING DETAILS, GLASS BITE & GASKET CONFIGURATIONS SEE SHEET 3.

◯ FASTENERS
△ GASKETS
⬡ ALUMINUM EXTRUSIONS

DADE CO. STAMP

PRODUCT REVISED
as complying with the Florida Building Code
Acceptance No 14-0624.19
Expiration Date Sept. 2, 2019
By Manuel Sosa
Miami Dade Product Control

ENGINEER STAMP

Florida Firm No. F-02000005175
Certificate of Authorization #9803
Ethan A. Charpentier
Registration No. 65106

Harmon

HI 7000 LARGE MISSILE
90° OUTSIDE CORNER DETAIL

DATE: 06/28/04	3 3/16/09
1 11/18/08	4 5/22/12
2 3/10/09	5 10/03/14

DWG. NO. HI7000LM

SHEET 17 OF 41

L:\EngineeringSales\Systems\Hurricane System\09-23-2014 NOA Dwg Revisions\HI7000 LM 2010 FBC\017_HI7000_lm.dwg - dbenson - 10/3/2014 9:46 AM

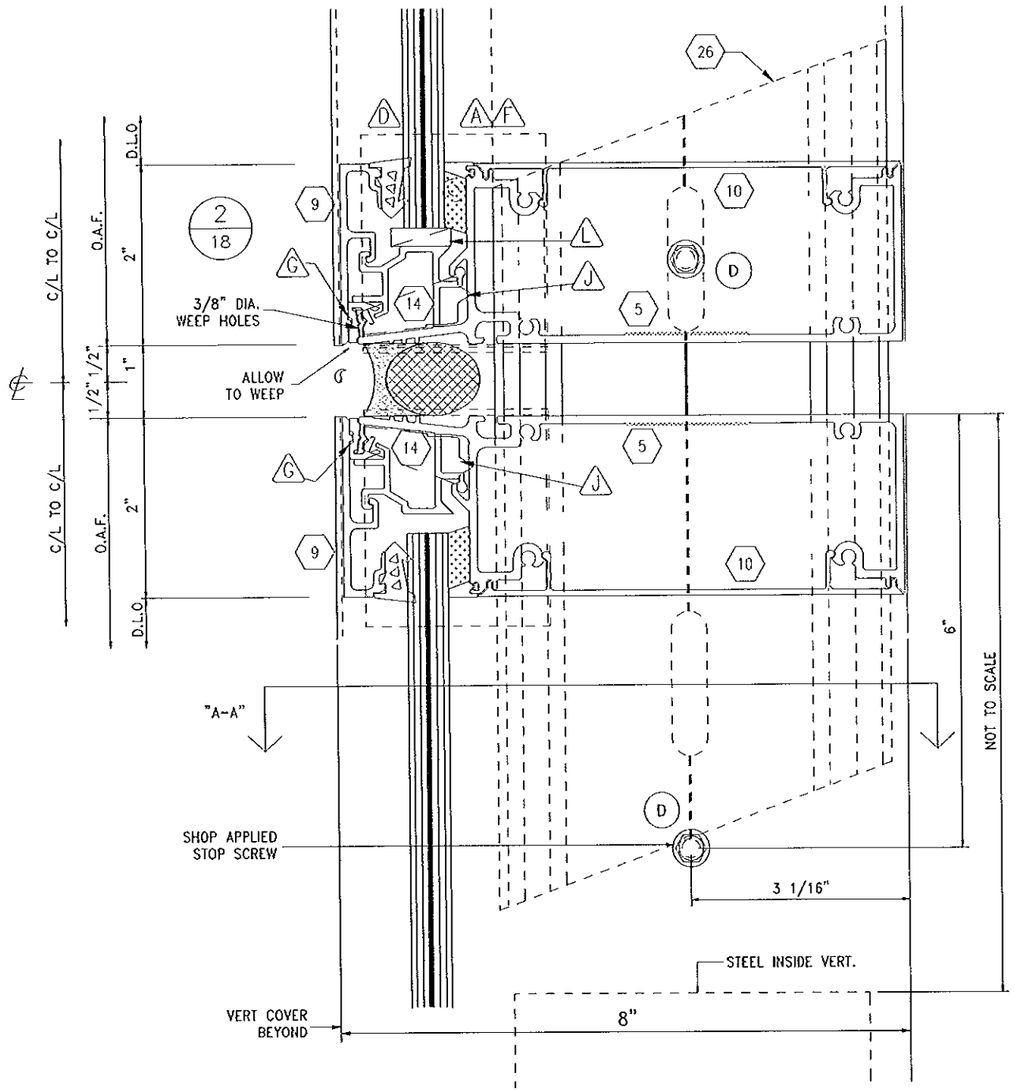

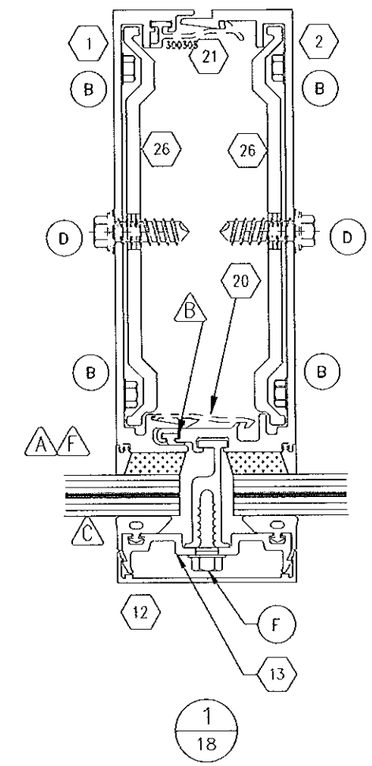

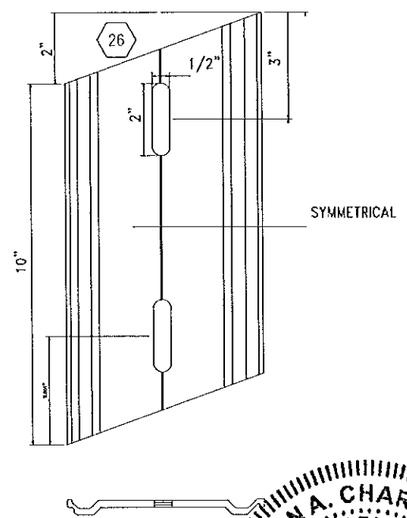

ETHAN A. CHARPENTIER
LICENSE
No. 65106
STATE OF FLORIDA
PROFESSIONAL ENGINEER

OCT 0 9 2014

Larson Engineering, Inc.
3524 Labore Road
White Bear Lake, MN 55110
(P) 651.481.9120 (F) 651.481.9201

GENERAL NOTES:

- FOR PART IDENTIFICATION REFER TO SHEET 2
- FOR GLAZING DETAILS, GLASS BITE & GASKET CONFIGURATIONS SEE SHEET 3.

◯ FASTENERS
△ GASKETS
⬡ ALUMINUM EXTRUSIONS

DADE CO. STAMP

PRODUCT REVISED
as complying with the Florida Building Code
Acceptance No 14-0624.19
Expiration Date Sept. 2, 2019
By Manuel Perez
Miami Dade Product Control

ENGINEER STAMP

Florida Firm No. F-02000005175
Certificate of Authorization #9803
Ethan A. Charpentier
Registration No. 65106

Harmon

HI 7000 LARGE MISSILE MULLION SPLICE DETAIL

DATE: 06/28/04	3 3/16/09
1 11/18/08	4 5/22/12
2 3/10/09	5 10/03/14

DWG. NO. HI7000LM

SHEET 18 OF 41

L:\EngineeringSales\Systems\Hurricane System\09-23-2014 NOA Dwg Revisions\HI7000 LMI 2010 FBC\018_HI7000_lm.dwg - dbenson - 10/3/2014 9:46 AM

L:\EngineeringSales\Systems\Hurricane System\09-23-2014 NOA Dwg Revisions\HI7000 LMI 2010 FBC\019_HI7000_lm.dwg - dbenson - 10/6/2014 3:26 PM

STRAP ANCHOR

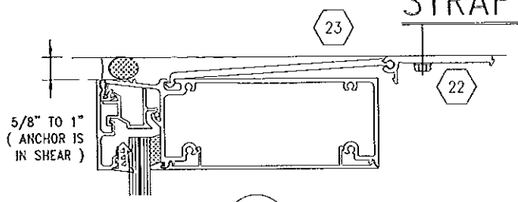

1/19

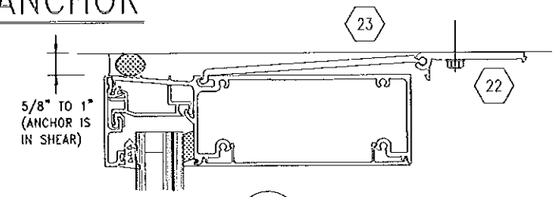

3/19

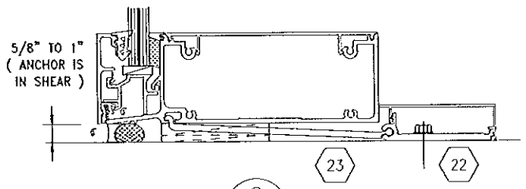

2/19

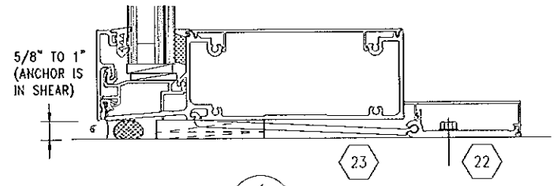

4/19

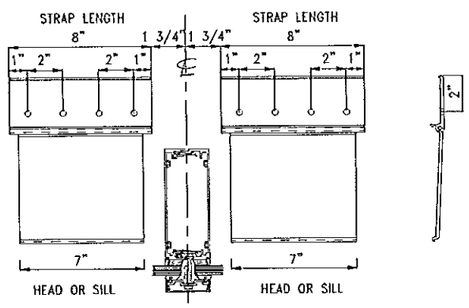

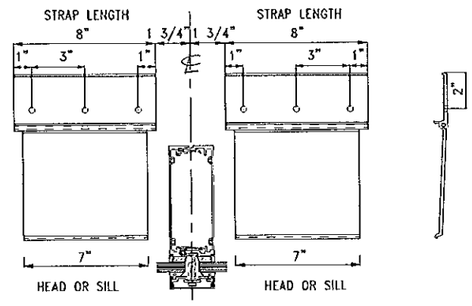

TESTED CONDITIONS SHOWN ABOVE.
- (2) 8" STRAPS TESTED TO 2715# END REACTION
- (1) 8" STRAP TESTED TO 1,345# END REACTION
- ANCHORS MAY BE MADE LONGER TO ACCOMMODATE FASTENERS BASED ON PERIMETER CONDITIONS.
- A MINIMUM OF TWO (2) FASTENERS SHALL ALWAYS BE USED.

ANCHOR FASTENER REQUIREMENTS

SUBSTRATE	REACTION	FASTENER TYPE	QTY.	MIN. EMBED.	MIN. EDGE DIST.
WOOD	1,305 #	3/8"x3 1/2" LAG BOLT	3	3"	1 1/2"
CONCRETE	2910 #	3/8" DIA POWERS	2	3"	4 1/2"
STEEL	2,715 #	#14 DRIL-FLEX	3	N/A	1"
METAL STUD	2,230 #	#14 DRIL-FLEX	4	N/A	1"

THRU-FRAME ANCHOR

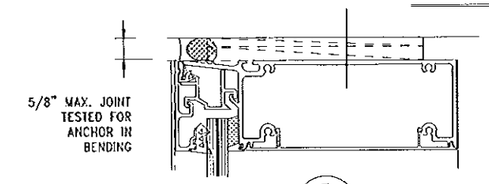

5/19

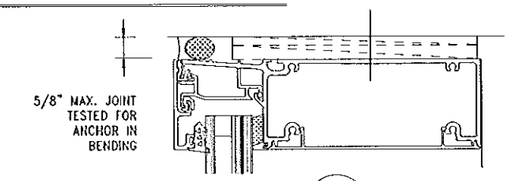

7/19

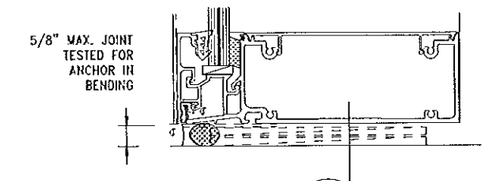

6/19

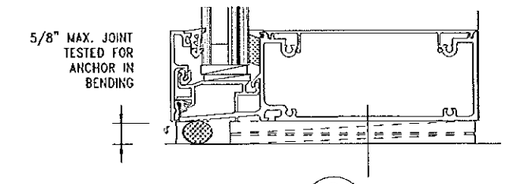

8/19

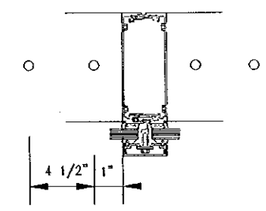

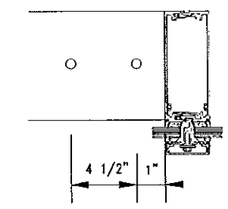

ETHAN A. CHARPENTIER
LICENSE
No. 65106
STATE OF FLORIDA
PROFESSIONAL ENGINEER

OCT 0 9 2014

TESTED CONDITIONS SHOWN ABOVE.
- (4) FASTENERS, (2) EITHER SIDE @ INTERMEDIATE VERTICAL TESTED TO 1,345# END REACTION
- (1) FASTENER ON SAME SIDE @ JAMBS TESTED TO 1185# END REACTION
- FASTENER SPACING AND QUANTITY MAY CHANGE BASED ON PERIMETER CONDITIONS.
- A MINIMUM OF TWO (2) FASTENERS SHALL ALWAYS BE USED (EXCEPT AT JAMBS).

ANCHOR FASTENER REQUIREMENTS

SUBSTRATE	REACTION	FASTENER TYPE	QTY.	MIN. EMBED.	MIN. EDGE DIST.
WOOD	1,345 #	3/8" DIA LAG BOLT	4	3"	1 1/2"
CONCRETE	1,345 #	3/8" DIA.	4	3"	2 11/16"
STEEL	1,345 #	3/8" DIA	4	N/A	1"
METAL STUD	1,345 #	1/4" DIA DRIL-FLEX	4	N/A	1"

Larson Engineering, Inc.
3524 Labore Road
White Bear Lake, MN 55110
(P) 651.481.9120 (F) 651.481.9201

GENERAL NOTES:

- SIZES OF ANCHOR COMPONENTS LISTED ABOVE ARE A MINIMUM, BASED ON MOCKUP CALCULATIONS COMPLYING WITH CURRENT FBC
- ACTUAL LENGTH AND NUMBER & SIZE OF HOLES TO BE DETERMINED BY PROJECT SPECIFIC PERIMETER CONDITIONS AND TYPES OF FASTENERS USED.
- CONCRETE STRENGTH MUST BE A MINIMUM OF Fc=4,500 PSI
- ALL WOOD AND SHEET METAL SCREWS SHALL BE CARBON STEEL GRADE 5
- ALL SELF DRILLING SCREWS SHALL BE ELCO "DRIL-FLEX" WITH STALGUARD COATING.
- ALL CONCRETE ANCHORS TO BE POWERS "WEDGE BOLTS".

DADE CO. STAMP

PRODUCT REVISED
as complying with the Florida
Building Code
Acceptance No 14.0624.19
Expiration Date Sept 7, 2019
By Manuel Perez
Miami Dade Product Control

ENGINEER STAMP

Florida Firm No. F-02000005175
Certificate of Authorization #9803
Ethan A. Charpentier
Registration No. 65106

Harmon

HI 7000 LARGE MISSILE
ANCHOR APPLICATIONS
STRAP & THRU-FRAME

DATE: 06/28/04	3 3/16/09
1 11/18/08	4 5/22/12
2 3/10/09	5 10/03/14

DWG. NO. HI7000LM

SHEET 19 OF 41

L:\EngineeringSales\Systems\Hurricane System\09-23-2014 NOA Dwg Revisions\HI7000 LMI 2010 FBC\020_HI7000_lm.dwg - dbenson - 10/6/2014 3:28 PM

STEEL ANGLES IN VERTICALS

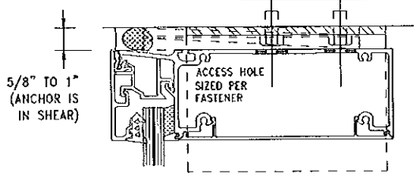

1/20

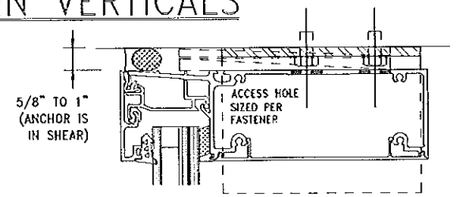

3/20

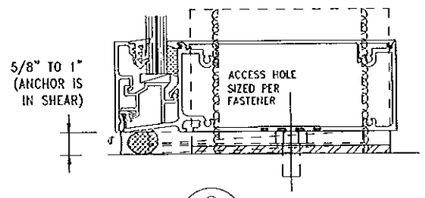

2/20

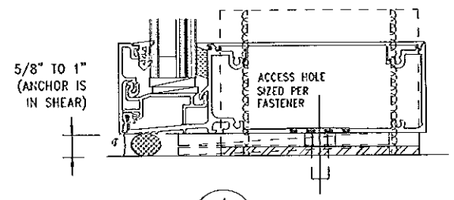

4/20

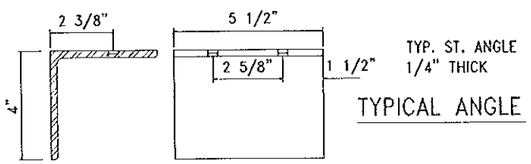

TYPICAL ANGLE

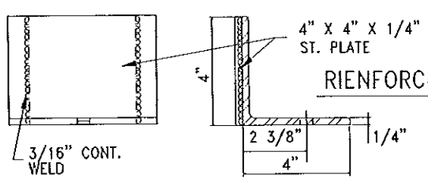

RIENFORCED ANGLE

TESTED CONDITIONS SHOWN ABOVE
- TYPICAL ANCHOR USED w/ (2) FASTENERS
- REINFORCED ANGLE USED w/ (1) FASTENER. REINFORCING PLATE ADDED TO PREVENT TWIST IMPOSED BY ONLY (1) FASTENER
- ANCHORS OCCUR ON EACH SIDE OFVERTICAL, (1) @ JAMB

ANCHOR FASTENER REQUIREMENTS FOR TYP. ANGLE

SUBSTRATE	REACTION	FASTENER TYPE	QTY.	MIN. EMBED.	MIN. EDGE DIST.
WOOD	1,175 #	3/8" DIA LAG	4	3"	1 1/2"
CONCRETE	N/A	N/A	N/A	N/A	N/A
STEEL	4,520 #	3/8" DIA	4	N/A	1"
METAL STUD	860 #	#14 DRIL-FLEX	4	N/A	1"

ANCHOR FASTENER REQUIREMENTS FOR REIN. ANGLE

SUBSTRATE	REACTION	FASTENER TYPE	QTY.	MIN. EMBED.	MIN. EDGE DIST.
WOOD	575 #	3/8" DIA LAG	2	3"	1 1/2"
CONCRETE	4,520 #	5/8" DIA	2	4"	4 13/16"
STEEL	3,470 #	3/8" DIA	2	N/A	1"
METAL STUD	595 #	#14 DRIL-FLEX	2	N/A	1"

ALUMINUM LUG IN VERTICALS

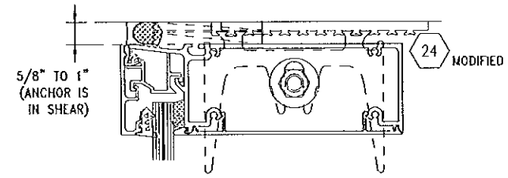

5/20

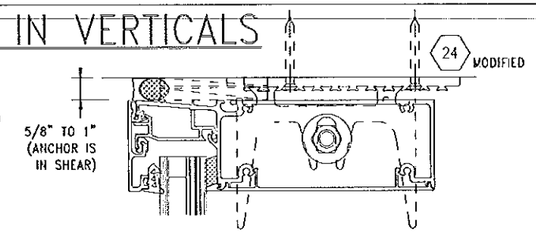

7/20

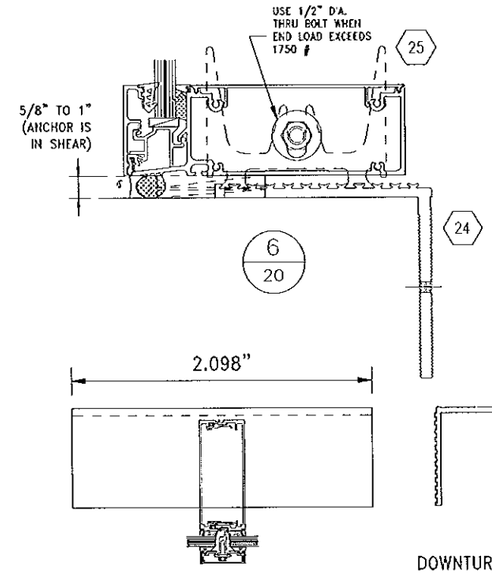

6/20

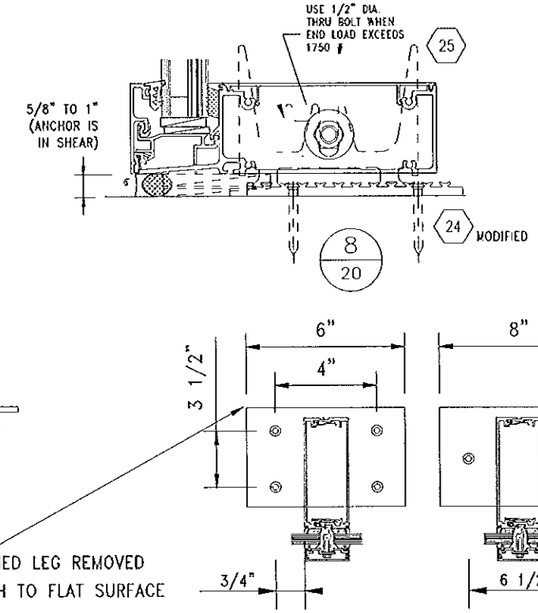

8/20

TESTED CONDITIONS SHOWN ABOVE
- LUG ANCHOR NOT TESTED AT A HEAD CONDITION
- WHEN TYPICAL ANCHOR IS USED QUANTITY AND SPACING OF FASTENERS IN DOWN-TURNED LEG TO BE DETERMINED BY PERIMETER CONDITIONS.
- MODIFIED ANCHOR USE w/ (4) FASTENERS IN TOP LEG AS SHOWN

ANCHOR FASTENER REQUIREMENTS

SUBSTRATE	REACTION	FASTENER TYPE	QTY.	MIN. EMBED.	MIN. EDGE DIST.
WOOD	1,110 #	3/8" DIA LAG	4	3"	1 1/2"
CONCRETE	2,715 #	1/2" DIA	2	4 1/8"	3 1/8"
STEEL	2,715 #	#14 DRIL-FLEX	4	N/A	1"
METAL STUD	1,340 #	#14 DRIL-FLEX	4	N/A	1"

GENERAL NOTES:

- SIZES OF ANCHOR COMPONENTS LISTED ABOVE ARE A MINIMUM, BASED ON MOCKUP CALCULATIONS COMPLYING WITH CURRENT FBC
- ACTUAL LENGTH AND NUMBER & SIZE OF HOLES TO BE DETERMINED BY PROJECT SPECIFIC PERIMETER CONDITIONS AND TYPES OF FASTENERS USED.
- CONCRETE STRENGTH MUST BE A MINIMUM OF Fc=4,500 PSI
- ALL WOOD AND SHEET METAL SCREWS SHALL BE CARBON STEEL GRADE 5
- ALL SELF DRILLING SCREWS SHALL BE ELCO "DRIL-FLEX" WITH STALGUARD COATING.
- ALL CONCRETE ANCHORS TO BE POWERS "WEDGE BOLTS".

DADE CO. STAMP

PRODUCT REVISED
as complying with the Florida Building Code
Acceptance No 14-0624.19
Expiration Date Sept. 2, 2019
By Manuel Sera
Miami Dade Product Control

Larson & Associates Engineering, Inc.
3301 Ridgewood Road
Lake Bear Lake, MS 55110
(P) 651.481.9120 (F) 651.481.9120

ENGINEER STAMP
No. 65106
STATE OF FLORIDA
PROFESSIONAL ENGINEER
OCT 0 9 2014
Florida Firm No. F-02000005175
Certificate of Authorization #9803
Ethan A. Charpentier
Registration No. 65106

Harmon

7000 LARGE MISSILE ANCHOR APPLICATIONS
STEEL ANGLES & ALUMINUM LUGS

DATE: 06/28/04	3 3/16/09
1 11/18/08	4 5/22/12
2 3/10/09	5 10/03/14

DWG. NO. HI7000LM

L:\EngineeringSales\Systems\Hurricane System\09-23-2014 NOA Dwg Revisions\HI7000 LMI 2010 FBC\021_HI7000_lm.dwg - dbenson - 10/6/2014 3:30 PM

TWIN SPAN MIDPOINT ANCHOR

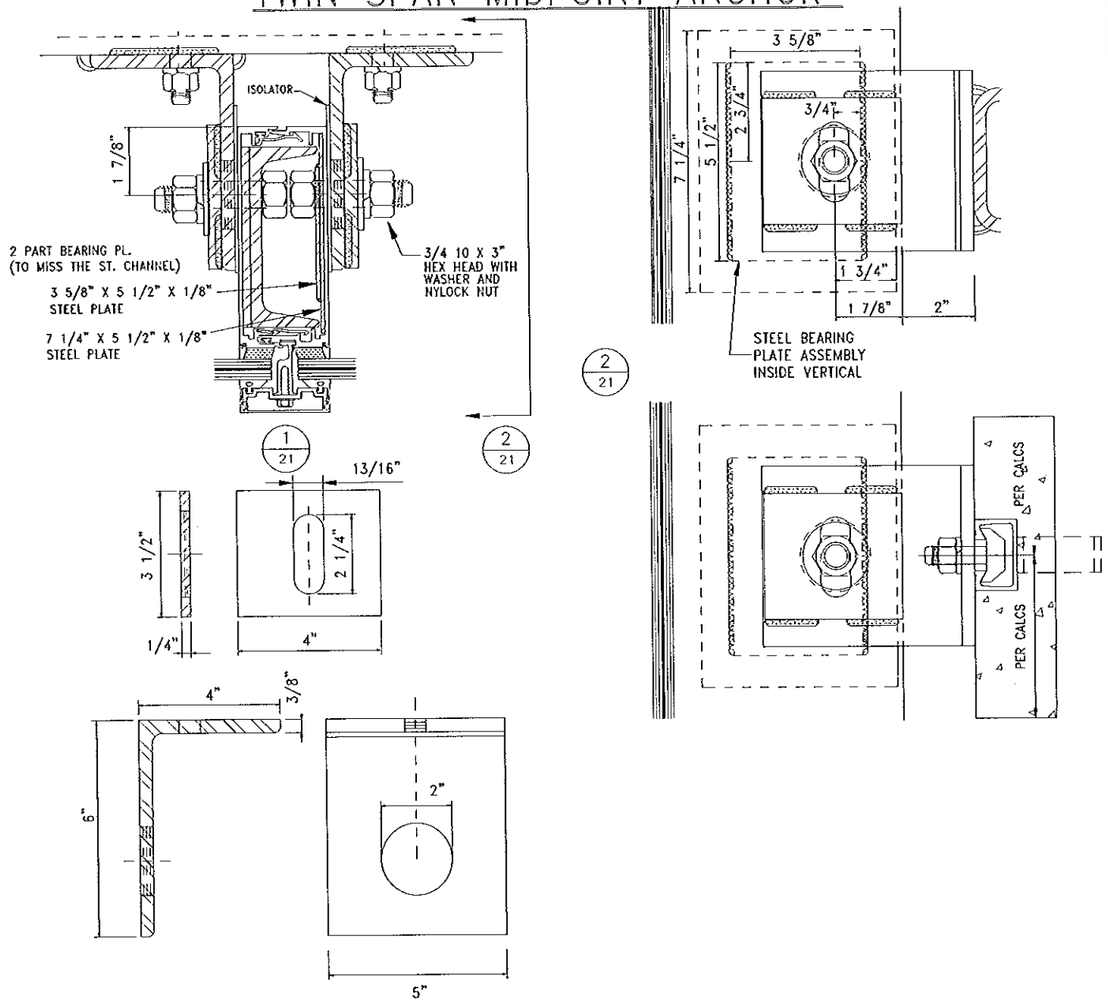

TESTED CONDITION SHOWN ABOVE.
- ANCHOR ACCOMODATED 8,890 # WL REACTION
- ANCHORS MAY BE MADE LONGER TO ACCOMMADATE MORE FASTENERS BASED ON PERIMETER CONDITIONS.
- WELD SIZES TO BE DETERMINED ON A PER JOB BASIS.

TWIN SPAN W/STACK ANCHOR

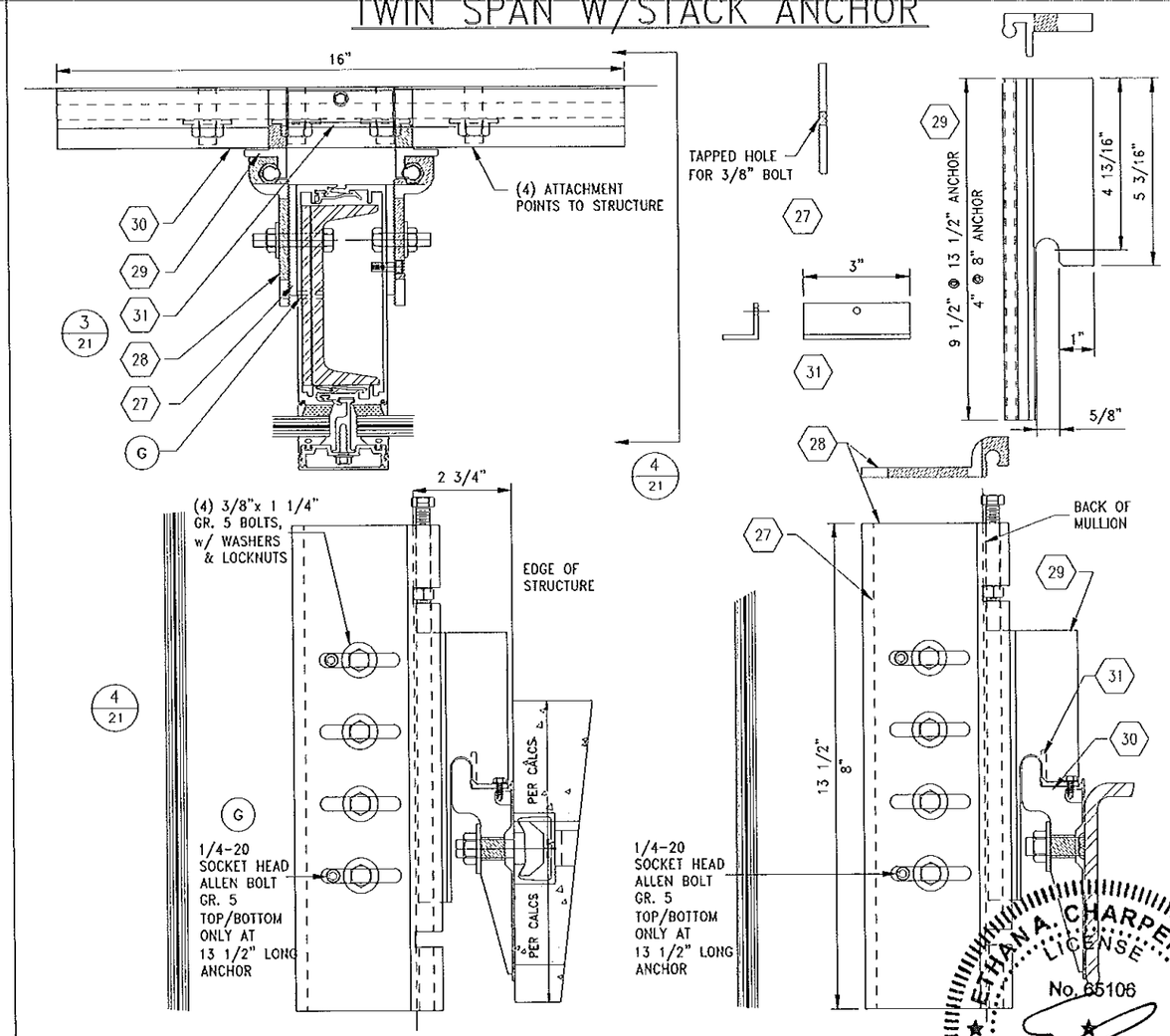

TESTED CONDITION SHOWN ABOVE.
- ANCHOR ACCOMODATED 10,500# WL REACTION, 1,000# DL REACTION FOR 13 1/2" LONG ANCHOR
- ANCHORS MAY BE MADE LONGER TO ACCOMMADATE MORE FASTENERS BASED ON PERIMETER CONDITIONS.
- 8" ANCHOR ACCOMODATED 10,500# WL REACTION, WHEN USED AS WINDLOAD ONLY
- 8" ANCHOR ACCOMODATED 4,400# WL WITH 1,000# DEADLOAD APPLIED

ETHAN A. CHARPENTIER LICENSE No. 65106 STATE OF FLORIDA PROFESSIONAL ENGINEER

OCT 09 2014

Larson Engineering, Inc.
3524 Labore Road
White Bear Lake, MN 55110
(P) 651.481.9120 (F) 651.481.9201

GENERAL NOTES:

- SIZES OF ANCHOR COMPONENTS LISTED ABOVE ARE A MINIMUM, BASED ON MOCKUP CALCULATIONS COMPLYING WITH CURRENT FBC
- ACTUAL LENGTH AND NUMBER & SIZE OF HOLES TO BE DETERMINED BY PROJECT SPECIFIC PERIMETER CONDITIONS AND TYPES OF FASTENERS USED.
- CONCRETE STRENGTH MUST BE A MINIMUM OF Fc=4,500 PSI
- ALL WOOD AND SHEET METAL SCREWS SHALL BE CARBON STEEL GRADE 5
- ALL SELF DRILLING SCREWS SHALL BE ELCO "DRIL-FLEX" WITH STALGUARD COATING.
- ALL CONCRETE ANCHORS TO BE POWERS "WEDGE BOLTS".

DADE CO. STAMP

PRODUCT REVISED
as complying with the Florida Building Code
Acceptance No. 14-0674.19
Expiration Date Sept. 2, 2019
By [signature]
Miami-Dade Product Control

ENGINEER STAMP

Florida Firm No. F-02000005175
Certificate of Authorization #9803
Ethan A. Charpentier
Registration No. 65106

Harmon

HI 7000 LARGE MISSILE ANCHOR APPLICATIONS
EDGE OF SLAB

DATE: 06/28/04	3 3/16/09
1 11/18/08	4 5/22/12
2 3/10/09	5 10/03/14

DWG. NO. HI7000LM

L:\EngineeringSales\Systems\Hurricane System\09-23-2014 NOA Dwg Revisions\HI7000 LMI 2010 FBC\022_HI7000_lm.dwg - dbenson - 10/6/2014 3:32 PM

JAMB ANCHOR

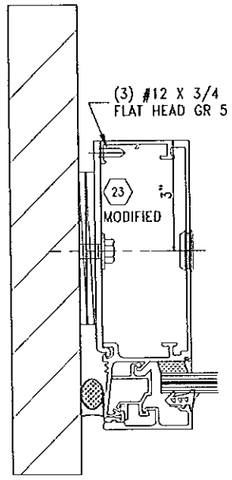

1
22

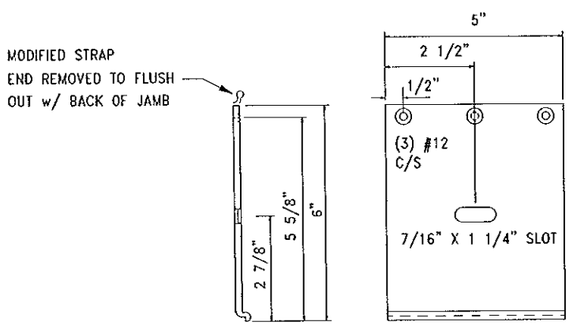

TESTED CONDITIONS SHOWN ABOVE.
- (1) 5" MODIFIED STRAP TESTED TO 1870# END REACTION
- ANCHORS MAY BE MADE LONGER TO ACCOMMADATE MORE FASTENERS BASED ON JOB SPECIFIC PERIMETER CONDITIONS.

EXPLODED VIEW OF TYP. CURTAIN WALL ANCHOR

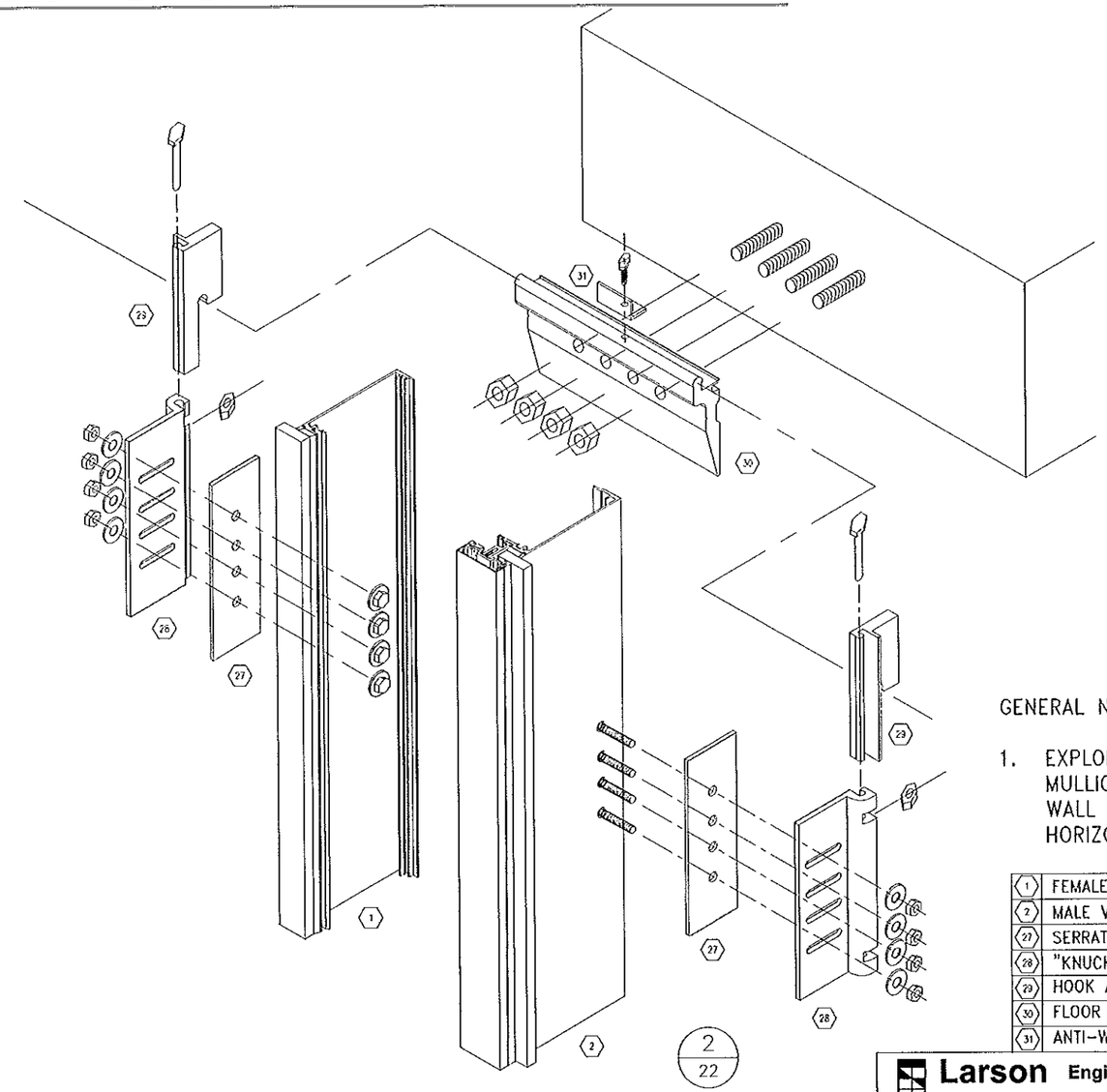

2
22

ETHAN A. CHARPENTIER
LICENSE
No. 65106
STATE OF FLORIDA
PROFESSIONAL ENGINEER

OCT 0 9 2014

GENERAL NOTES:

1. EXPLODED VIEW OF TYPICAL MULLION ANCHOR FOR CURTAIN WALL APPLICATION WITH STACK HORIZONTAL

1	FEMALE VERTICAL MULLION	306001
2	MALE VERTICAL MULLION	306002
27	SERRATED PLATE	930110
28	"KNUCKLE" ANCHOR	930109
29	HOOK ANCHOR	930108
30	FLOOR EDGE PLATE	930111
31	ANTI-WALK ANGLE	.

Larson Engineering, Inc.
3524 Labore Road
White Bear Lake, MN 55110
(P) 651.481.9120 (F) 651.481.9201

GENERAL NOTES:

- SIZES OF ANCHOR COMPONENTS LISTED ABOVE ARE A MINIMUM, BASED ON MOCKUP CALCULATIONS COMPLYING WITH CURRENT FBC
- ACTUAL LENGTH AND NUMBER & SIZE OF HOLES TO BE DETERMINED BY PROJECT SPECIFIC PERIMETER CONDITIONS AND TYPES OF FASTENERS USED.
- CONCRETE STRENGTH MUST BE A MINIMUM OF Fc=4,500 PSI
- ALL WOOD AND SHEET METAL SCREWS SHALL BE CARBON STEEL GRADE 5
- ALL SELF DRILLING SCREWS SHALL BE ELCO "DRIL-FLEX" WITH STALGUARD COATING.
- ALL CONCRETE ANCHORS TO BE POWERS "WEDGE BOLTS".

DADE CO. STAMP

PRODUCT REVISED
as complying with the Florida Building Code
Acceptance No 14-0624.19
Expiration Date Sept 7, 2019
By Manuel Frias
Miami Dade Product Control

ENGINEER STAMP

Florida Firm No. F-02000005175
Certificate of Authorization #9803
Ethan A. Charpentier
Registration No. 65106

Harmon

HI 7000 LARGE MISSILE ANCHOR APPLICATIONS EXPLODED VIEW

DATE: 06/28/04	3 3/16/09
1 11/18/08	4 5/22/12
2 3/10/09	5 10/03/14

DWG. NO. HI7000LM

SHEET 22 OF 41

L:\EngineeringSales\Systems\Hurricane System\09-23-2014 NOA Dwg Revisions\HI7000 LMI 2010 FBC\023_HI7000_lm.dwg - dbenson - 10/3/2014 9:46 AM

JAMB MULLIONS SINGLE SPAN

REINIFORCING OPTIONS → 8 9 10 11

	"B"	Case 8 "L"/"R"	Case 9 "L"/"R"	Case 10 "L"/"R"	Case 11 "L"/"R"
UP TO MAXIMUM 60 PSF POS. OR NEG. LOAD	3'-0"	13'-7"	16'-5"	18'-3"	20'-1"
		656	793	879	967
	4'-0"	11'-10"	15'-4"	17'-0"	18'-9"
		751	972	1077	1185
	5'-0"	10'-8"	14'-3"	16'-2"	17'-9"
		836	1118	1264	1391
	6'-0"	9'-9"	13'-1"	15'-5"	17'-0"
		912	1220	1442	1587
UP TO MAXIMUM 70 PSF POS. OR NEG. LOAD	3'-0"	12'-7"	15'-10"	17'-6"	19'-3"
		708	890	987	1086
	4'-0"	11'-0"	14'-8"	16'-4	18'-0"
		811	1085	1209	1331
	5'-0"	9'-10"	13'-2"	15'-6"	17'-1"
		902	1207	1419	1561
	6'-0"	9'-0"	12'-1"	14'-10"	16'-4"
		985	1318	1618	1781
UP TO MAXIMUM 80 PSF POS. OR NEG. LOAD	3'-0"	11'-9"	15'-3"	16'-11"	18'-8"
		757	984	1091	1200
	4'-0"	10'-3"	13'-9"	15'-10"	17'-5"
		867	1160	1337	1471
	5'-0"	9'-3"	12'-4"	15'-0"	16'-6"
		965	1291	1568	1726
	6'-0"	8'-5"	11'-4"	13'-11"	15'-10"
		1053	1409	1732	1969
UP TO MAXIMUM 90 PSF POS. OR NEG. LOAD	3'-0"	11'-1"	14'-10"	16'-5"	18'-1"
		803	1074	1191	1311
	4'-0"	9'-8"	12'-11"	15'-4"	16'-11"
		920	1230	1460	1607
	5'-0"	8'-8"	11'-8"	14'-4"	16'-0"
		1023	1369	1683	1885
	6'-0"	7'-11"	10'-8"	13'-1"	15'-4"
		1117	1494	1837	2150
UP TO MAXIMUM 100 PSF POS. OR NEG. LOAD	3'-0"	10'-6"	14'-1"	16'-0"	17'-8"
		847	1133	1289	1419
	4'-0"	9'-2'	12'-3"	15'-0"	16'-6"
		970	1297	1580	1739
	5'-0"	8'-3"	11'-0"	13'-7"	15'-7"
		1079	1443	1774	2040
	6'-0"	7'-6"	10'-1"	12'-5"	14'-11"
		1177	1575	1936	2327
UP TO MAXIMUM 110 PSF POS. OR NEG. LOAD	3'-0"	10'-0"	13'-5"	15'-8"	17'-3"
		888	1188	1385	1524
	4'-0"	8'-9"	11'-8"	14'-5"	16'-1"
		1017	1360	1672	1868
	5'-0"	7'-10"	10'-6"	12'-11"	15'-3"
		1131	1513	1860	2191
	6'-0"	7'-2"	9'-8"	11'-10"	13'-9"
		1235	1652	2031	2355
UP TO MAXIMUM 110 PSF POS. OR 120 PSF NEG. LOAD	3'-0"	9'-7"	12'-10"	15'-4"	16'-10
		927	1241	1478	1626
	4'-0"	8'-4"	11'-2"	13'-9"	15'-9"
		1062	1421	1746	1993
	5'-0"	7'-6"	10'-1"	12'-5"	14'-11"
		1181	1581	1943	2339
	6'-0"	6'-11"	9'-3"	11'-4"	12'-7"
		1290	1726	2121	2355
UP TO MAXIMUM 110 PSF POS. OR 130 PSF NEG. LOAD	3'-0"	9'-3"	12'-4"	15'-0"	16'-6"
		965	1291	1569	1727
	4'-0"	8'-0"	10'-9"	13'-3"	15'-5"
		1105	1479	1818	2117
	5'-0"	7'-3"	9'-8"	11'-11"	13'-10"
		1230	1645	2022	2355
	6'-0"	6'-7"	8'-10"	10'-11"	11'-8"
		1342	1796	2208	2355

JAMB MULLIONS TWIN SPAN

REINIFORCING OPTIONS → 8 9 10 11

	"B"	Case 8 "L"/"R"	Case 9 "L"/"R"	Case 10 "L"/"R"	Case 11 "L"/"R"
UP TO MAXIMUM 60 PSF POS. OR NEG. LOAD	3' 0"	14'-7"	14'-7"	14'-7"	14'-7"
	RE	538	538	538	538
	RM	1716	1716	1716	1716
	4' 0"	13'-7"	14'-7"	14'-7"	14'-7"
	RE	658	706	706	706
	RM	2096	2251	2251	2251
	5' 0"	12'-3"	14'-7"	14'-7"	14'-7"
	RE	732	874	874	874
	RM	2332	2785	2785	2785
	6' 0"	11'-2'	14'-7"	14'-7"	14'-7"
	RE	799	1041	1041	1041
	RM	2546	3320	3320	3320
UP TO MAXIMUM 70 PSF POS. OR NEG. LOAD	3' 0"	14'-5"	14'-7"	14'-7"	14'-7"
	RE	620	628	628	628
	RM	1977	2002	2002	2002
	4' 0"	12'-7"	14'-7"	14'-7"	14'-7"
	RE	710	824	824	824
	RM	2264	2626	2626	2626
	5' 0"	11'-4"	14'-7"	14'-7"	14'-7"
	RE	790	1019	1019	1019
	RM	2519	3250	3250	3250
	6' 0"	10'-4"	13'-11"	14'-7"	14'-7"
	RE	863	1154	1215	1215
	RM	2750	3679	3873	3873
UP TO MAXIMUM 80 PSF POS. OR NEG. LOAD	3' 0"	13'-6"	14'-7"	14'-7"	14'-7"
	RE	663	718	718	718
	RM	2113	2288	2288	2288
	4' 0"	11'-9"	14'-7"	14'-7"	14'-7"
	RE	759	941	941	941
	RM	2420	3001	3001	3001
	5' 0"	10'-7"	14'-2"	14'-7"	14'-7"
	RE	845	1130	1165	1165
	RM	2693	3602	3714	3714
	6' 0"	9'-8"	13'-0"	14'-7"	14'-7"
	RE	922	1234	1388	1388
	RM	2940	3933	4427	4427
UP TO MAXIMUM 90 PSF POS. OR NEG. LOAD	3' 0"	12'-9"	14'-7"	14'-7"	14'-7"
	RE	703	807	807	807
	RM	2242	2574	2574	2574
	4' 0"	11'-1"	14'-7"	14'-7"	14'-7"
	RE	805	1059	1059	1059
	RM	2567	3376	3376	3376
	5' 0"	10'-0"	13'-4"	14'-7"	14'-7"
	RE	896	1198	1310	1310
	RM	2856	3821	4178	4178
	6' 0"	9'-2'	12'-3"	14'-7"	14'-7"
	RE	978	1308	1562	1562
	RM	3118	4172	4980	4980

REINIFORCING OPTIONS → 8 9 10 11

	"B"	Case 8 "L"/"R"	Case 9 "L"/"R"	Case 10 "L"/"R"	Case 11 "L"/"R"
UP TO MAXIMUM 100 PSF POS. OR NEG. LOAD	3' 0"	12'-1"	14'-7"	14'-7"	14'-7"
	RE	741	897	897	897
	RM	2363	2860	2860	2860
	4' 0"	10'-6"	14'-1"	14'-7"	14'-7"
	RE	849	1136	1176	1176
	RM	2706	3620	3751	3751
	5' 0"	9'-6"	12'-8"	14'-7"	14'-7"
	RE	944	1263	1456	1456
	RM	3010	4028	4642	4642
	6' 0"	8'-8"	11'-7"	14'-3"	14'-7"
	RE	1031	1379	1695	1735
	RM	3287	4397	5405	5533
UP TO MAXIMUM 110 PSF POS. OR NEG. LOAD	3' 0"	11'-6"	14'-7"	14'-7"	14'-7"
	RE	777	987	987	987
	RM	2478	3146	3146	3146
	4' 0"	10'-0"	13'-5"	14'-7"	14'-7"
	RE	890	1191	1294	1294
	RM	2838	3797	4126	4126
	5' 0"	9'-0"	12'-1"	14'-7"	14'-7"
	RE	990	1325	1601	1601
	RM	3157	4224	5106	5106
	6' 0"	8'-3"	11'-1"	13'-7"	
	RE	1081	1446	1778	
	RM	3447	4612	5669	
UP TO MAXIMUM 110 PSF POS. OR 120 PSF NEG. LOAD	3' 0"	11'-0"	14'-7"	14'-7"	14'-7"
	RE	812	1076	1076	1076
	RM	2588	3432	3432	3432
	4' 0"	9'-7"	12'-10"	14'-7"	14'-7"
	RE	930	1244	1412	1412
	RM	2964	3966	4501	4501
	5' 0"	8'-8"	11'-7"	14'-3"	14'-7"
	RE	1034	1384	1701	1747
	RM	3298	4412	5423	5570
	6' 0"	7'-11"	10'-7"	13'-0"	
	RE	1129	1511	1857	
	RM	3600	4817	5921	
UP TO MAXIMUM 110 PSF POS. OR 130 PSF NEG. LOAD	3' 0"	10'-7"	14'-2"	14'-7"	14'-7"
	RE	845	1130	1166	1166
	RM	2694	3604	3718	3718
	4' 0"	9'-3"	12'-4"	14'-7"	14'-7"
	RE	968	1295	1529	1529
	RM	3085	4128	4876	4876
	5' 0"	8'-4"	11'-1"	13'-8"	
	RE	1077	1440	1770	
	RM	3432	4592	5645	
	6' 0"	7'-7"	10'-2'		
	RE	1175	1572		
	RM	3747	5014		

GENERAL NOTES:

- JAMB MULLION SPAN TABLES ARE BASED ON MONOLITHIC PART 306004. THIS TABLE IS CONSERVATIVE FOR INSULATED PART 306003.
- SPANS ARE BASED ON 5/8" JOINT DIMENSION AND 95 1/4" MAXIMUM DLO HEIGHT.
- "L" = MAXIMUM MULLION SPAN
- "B" = C/L TO C/L SPACING
- "B" = $\frac{W1 + W2}{2}$ (W1, W2)
- FOR SINGLE SPAN MAXIMUM DEFL. = L/180 or 1"
- (WHEN STEEL RIENF. IS USED, LENGTH OF STEEL IS LENGTH OF SPAN MINUS 12")
- SPANS ARE LIMITED BY MAXIMUM TESTED END REACTIONS
- R= REACTION (REFER TO PAGE 13 FOR BUILDING CONDITION TYPES AND PAGES 19, 20, 21, 23 FOR REACTION DETAIL OPTIONS)

REINFORCING OPTIONS

8	9	10	11
COMBINED Ix = 12.722 in⁴	COMBINED Ix = 22.772 in⁴ 1/4" X 5 1/2"	COMBINED Ix = 34.443 in⁴ C5x6.7	COMBINED Ix = 50.482 in⁴ 1 1/4 X 5"

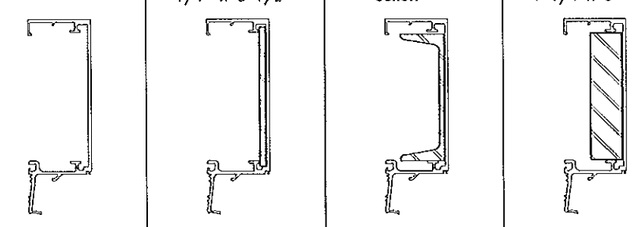

ETHAN A. CHARPENTIER LICENSE No. 65106 STATE OF FLORIDA PROFESSIONAL ENGINEER

OCT 0 9 2014

Larson Engineering, Inc.
3524 Labore Road
White Bear Lake, MN 55110
(P) 651.481.9120 (F) 651.481.9201

DADE CO. STAMP

PRODUCT REVISED
as complying with the Florida
Building Code
Acceptance No 14-0624.19
Expiration Date Sept. 2, 2019
By Manuel Sires
Miami Dade Product Control

ENGINEER STAMP

Florida Firm No. F-02000005175
Certificate of Authorization #9803
Ethan A. Charpentier
Registration No. 65106

Harmon

HI 7000 LARGE MISSILE ANCHOR APPLICATIONS JAMBS

DATE: 06/28/04	△3 3/16/09
△1 11/18/08	△4 5/22/12
△2 3/10/09	△5 10/03/14

DWG. NO. HI7000LM

L:\EngineeringSales\Systems\Hurricane System\09-23-2014 NOA Dwg Revisions\HI7000 LMI 2010 FBC\024_HI7000_lm.dwg - dbenson - 10/6/2014 3:37 PM

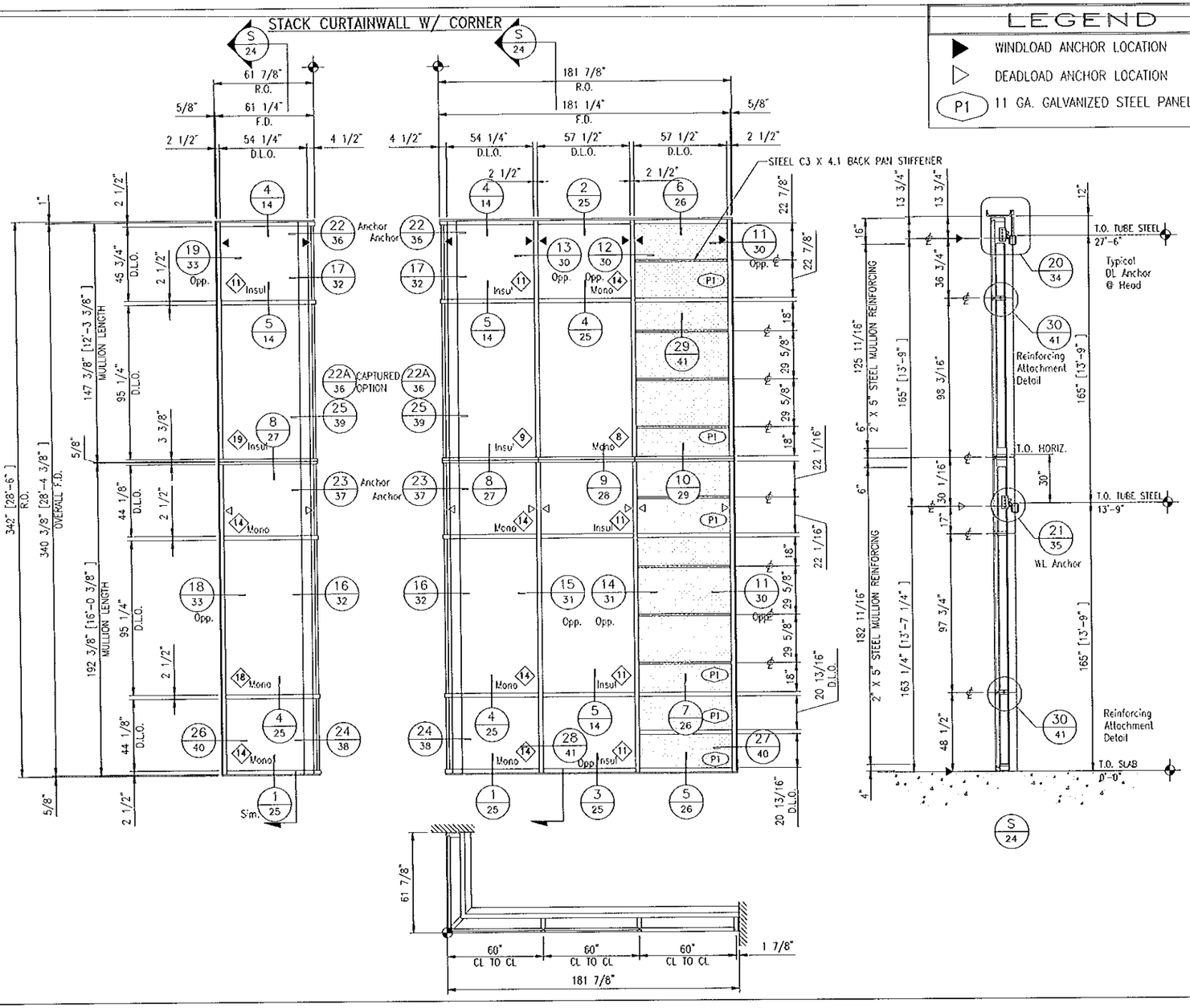

LEGEND

- ▶ WINDLOAD ANCHOR LOCATION
- ▷ DEADLOAD ANCHOR LOCATION
- (P1) 11 GA. GALVANIZED STEEL PANEL

HI-7000 OPTIONS

SYSTEM APPLICATION GUIDELINES:

1 SELECT GLASS FROM CHARTS ON SHEET 7. NOTE THE GLASS THICKNESS AND 4-SIDE CAPTURED VERSUS CAPTURED/SSG OPTIONS.

2 SELECT MULLION & REINFORCING AS REQUIRED FROM CHARTS ON SHEET 12 FOR TWIN SPAN w/ STACK HORIZONTAL APPLICATION. APPLICATION BASED ON WIND LOAD, MODULE "B", AND SPAN "L". REFER TO GENERAL NOTES AND GUIDELINES REGARDING SPAN LIMITATIONS AND COMBINATIONS.

3 SELECT ANCHOR APPLICATIONS FROM SHEET 13. MAKE SELECTION BASED ON PERIMETER CONDITION AND END REACTIONS. NOTE MAXIMUM TESTED END REACTIONS FOR PROPER APPLICATION.

4 SELECT APPROPRIATE DETAILS FROM ELEVATION AT LEFT, BASED ON GLASS APPLICATION AND MULLION REINFORCING REQUIREMENTS. FOR SPECIFIC ANCHOR DETAILS, SEE DETAILS REFERENCED ON ANCHOR APPLICATION SHEET 13.

CORNER APPLICATION

13'-9" SPAN (MAX.) ANCHOR TO ANCHOR
5'-0" MODULE (MAX.)

SEE SHEET 32 FOR DETAILS
SEE DETAIL 22A ON SHEET 36 FOR CAPTURED OPTION.

STACK APPLICATION

57 1/2" DLO MAXIMUM.
MAXIMUM TESTED SHEAR
IN STACK HORIZONTAL= 3,695 #

SEE SHEET 27 FOR DETAILS

ETHAN A. CHARPENTIER
LICENSE
No. 65106
STATE OF FLORIDA
PROFESSIONAL ENGINEER

Larson Engineering, Inc.
3524 Labore Road
White Bear Lake, MN 55110
(P) 651.481.9120 (F) 651.481.9201

OCT 09 2014

GENERAL NOTES:

DADE CO. STAMP
PRODUCT REVISED
as complying with the Florida Building Code
Acceptance No 14-0624.19
Expiration Date Sept. 4, 2019
By Manuel Spres
Miami Dade Product Control

ENGINEER STAMP

Florida Firm No. F-02000005175
Certificate of Authorization #9803
Ethan A. Charpentier
Registration No. 65106

Harmon

HI 7000 LARGE MISSILE
TWIN SPAN APPLICATION
w/ STACK HORIZONTAL

DATE: 06/28/04	3 3/16/09
1 11/18/08	4 5/22/12
2 3/10/09	5 10/03/14

DWG. NO. HI7000LM

L:\EngineeringSales\Systems\Hurricane System\09-23-2014 NOA Dwg Revisions\HI7000 LMI 2010 FBC\025_HI7000_lm.dwg - dbenson - 10/3/2014 9:46 AM

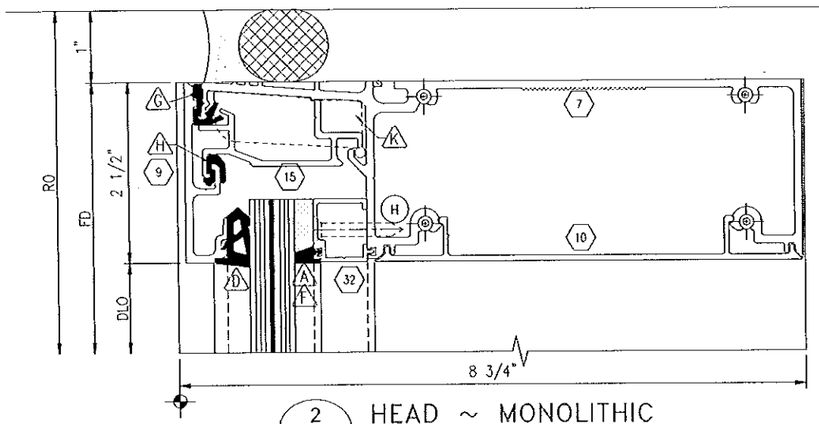

2 HEAD ~ MONOLITHIC
SCALE: FULL

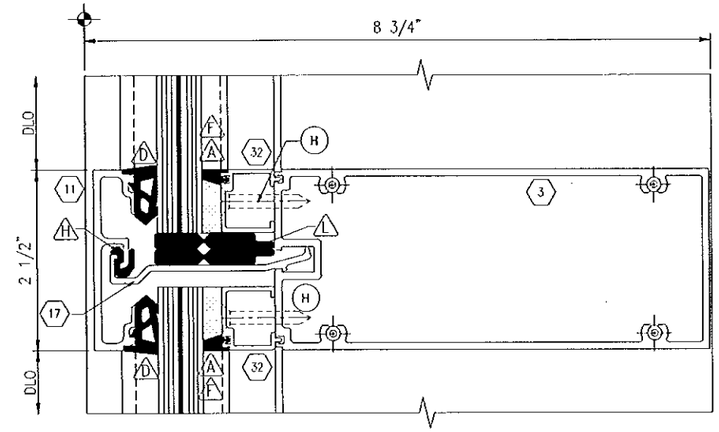

4 HORIZONTAL ~ MONOLITHIC
SCALE: FULL

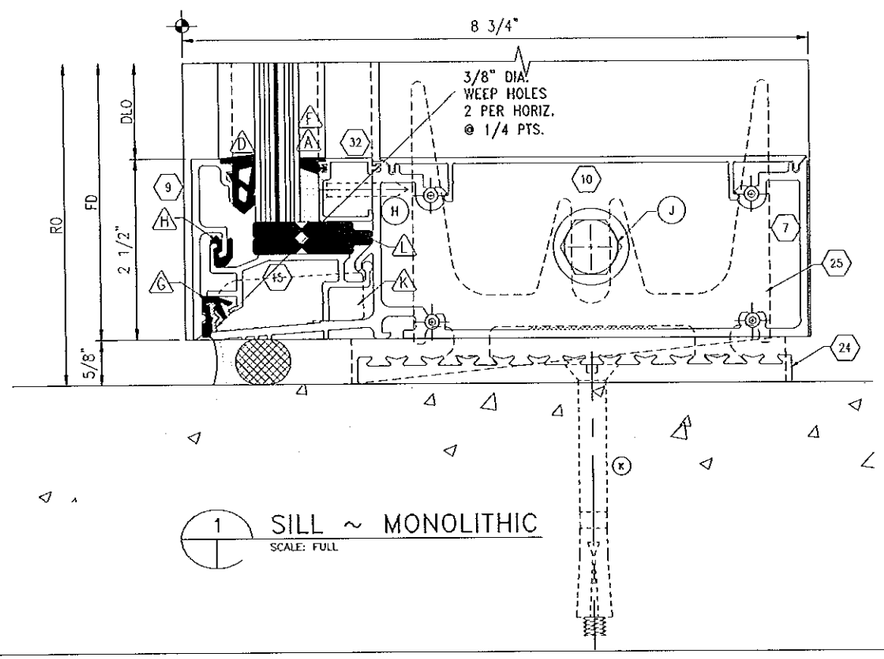

1 SILL ~ MONOLITHIC
SCALE: FULL

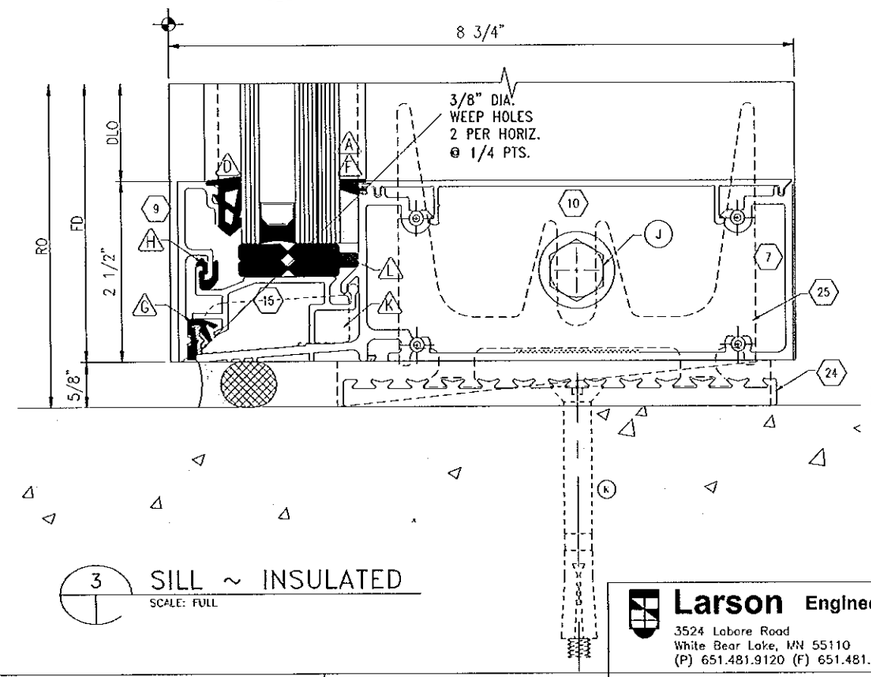

3 SILL ~ INSULATED
SCALE: FULL

ETHAN A. CHARPENTIER
LICENSE
No. 65106
STATE OF FLORIDA
PROFESSIONAL ENGINEER
OCT 0 9 2014

Larson Engineering, Inc.
3524 Labore Road
White Bear Lake, MN 55110
(P) 651.481.9120 (F) 651.481.9201

GENERAL NOTES:

- FOR ANCHOR DETAILS REFER TO SHEET 20
- FOR PART IDENTIFICATION REFER TO SHEET 2

◯ FASTENERS
△ GASKETS
⬡ ALUMINUM EXTRUSIONS

- FOR GLAZING DETAILS, GLASS BITE & GASKET CONFIGURATIONS SEE SHEET 3.

DADE CO. STAMP

PRODUCT REVISED
as complying with the Florida
Building Code
Acceptance No 14-0624.19
Expiration Date Sept. 2, 2019
By Manuel Seres
Miami Dade Product Control

ENGINEER STAMP

Florida Firm No. F-02000005175
Certificate of Authorization #9803
Ethan A. Charpentier
Registration No. 65106

Harmon

HI 7000 LARGE MISSILE
HORIZONTAL DETAILS

DATE: 06/28/04	3 3/16/09
1 11/18/08	4 5/22/12
2 3/10/09	5 10/03/14

DWG. NO. HI7000LM

L:\EngineeringSales\Systems\Hurricane System\09-23-2014 NOA Dwg Revisions\HI7000 LMI 2010 FBC\026_HI7000_lm.dwg - dbenson - 10/3/2014 9:46 AM

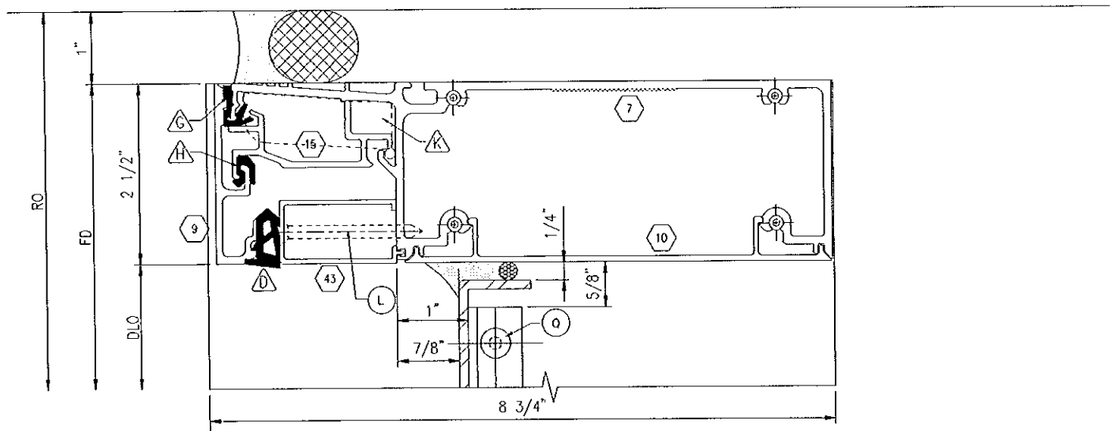

6 HEAD ~ BACK PAN
SCALE: FULL

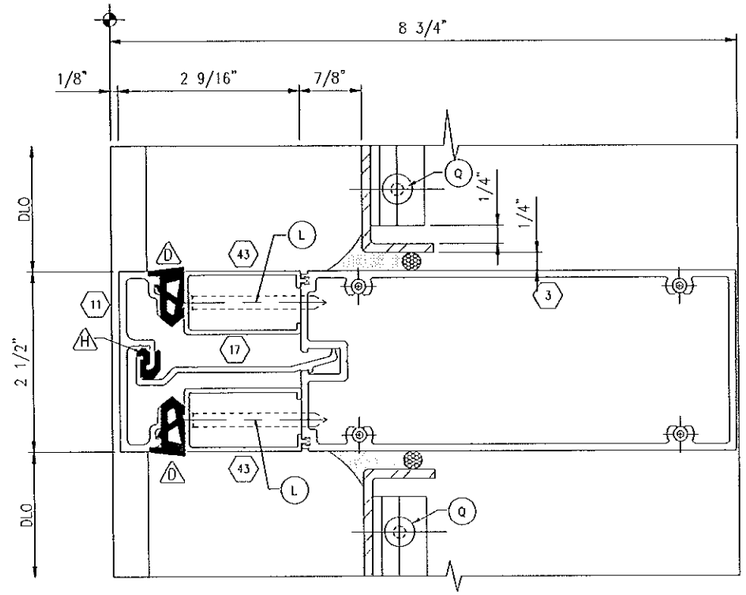

7 HORIZONTAL~ BACK PAN
SCALE: FULL

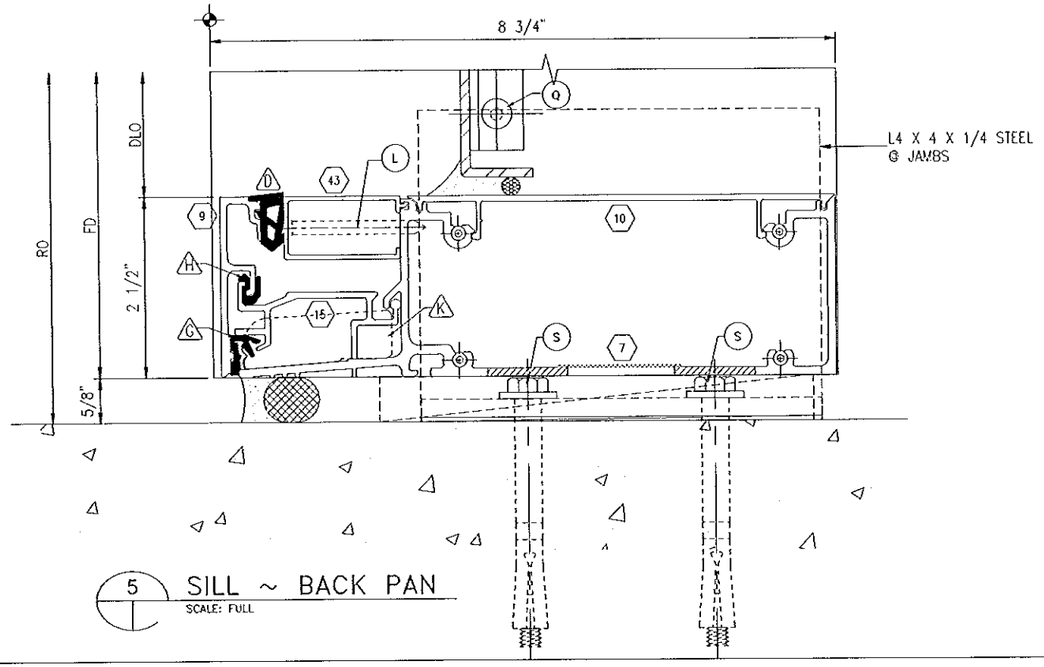

5 SILL ~ BACK PAN
SCALE: FULL

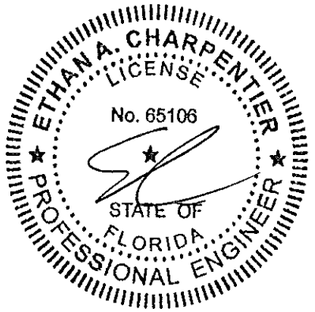

OCT 0 9 2014

Larson Engineering, Inc.
3524 Labore Road
White Bear Lake, MN 55110
(P) 651.481.9120 (F) 651.481.9201

GENERAL NOTES:

- FOR ANCHOR DETAILS REFER TO SHEET 20
- FOR PART IDENTIFICATION REFER TO SHEET 2
  - ◯ FASTENERS
  - △ GASKETS
  - ⬡ ALUMINUM EXTRUSIONS
- FOR GLAZING DETAILS, GLASS BITE & GASKET CONFIGURATIONS SEE SHEET 3.

DADE CO. STAMP

PRODUCT REVISED
as complying with the Florida
Building Code
Acceptance No 14-0624.19
Expiration Date Sept 2, 2019
By Manuel Diaz
Miami Dade Product Control

ENGINEER STAMP

Florida Firm No. F-02000005175
Certificate of Authorization #9803
Ethan A. Charpentier
Registration No. 65106

Harmon

HI 7000 LARGE MISSILE
HORIZONTAL DETAILS

DATE: 06/28/04	3 3/16/09
1 11/18/08	4 5/22/12
2 3/10/09	5 10/03/14

DWG. NO. HI7000LM

L:\EngineeringSales\Systems\Hurricane System\09-23-2014 NOA Dwg Revisions\HI7000 LMI 2010 FBC\027_HI7000_lm.dwg - dbenson - 10/3/2014 9:46 AM

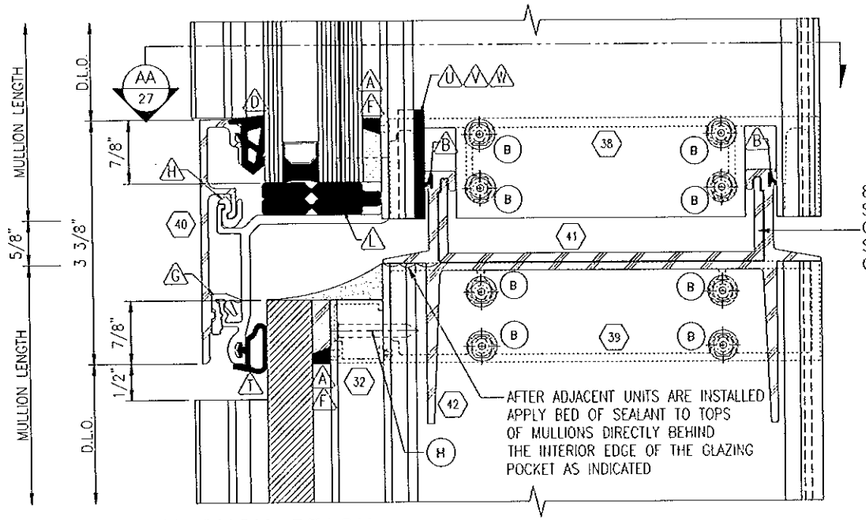

BB SECTION THROUGH STACK
SCALE: FULL

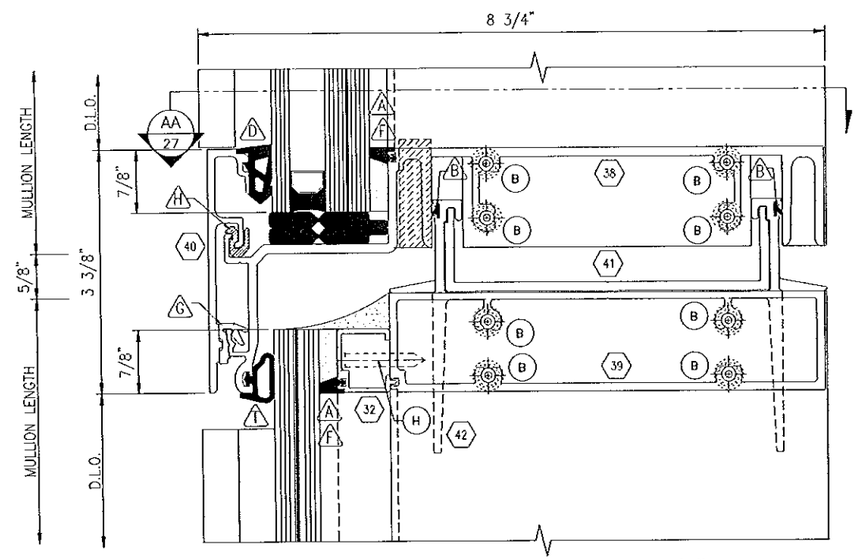

8 STACK HORIZONTAL
SCALE: FULL

MAXIMUM DLO WIDTH=57 1/2"
MAXIMUM SHEAR AT STACK=3,695#

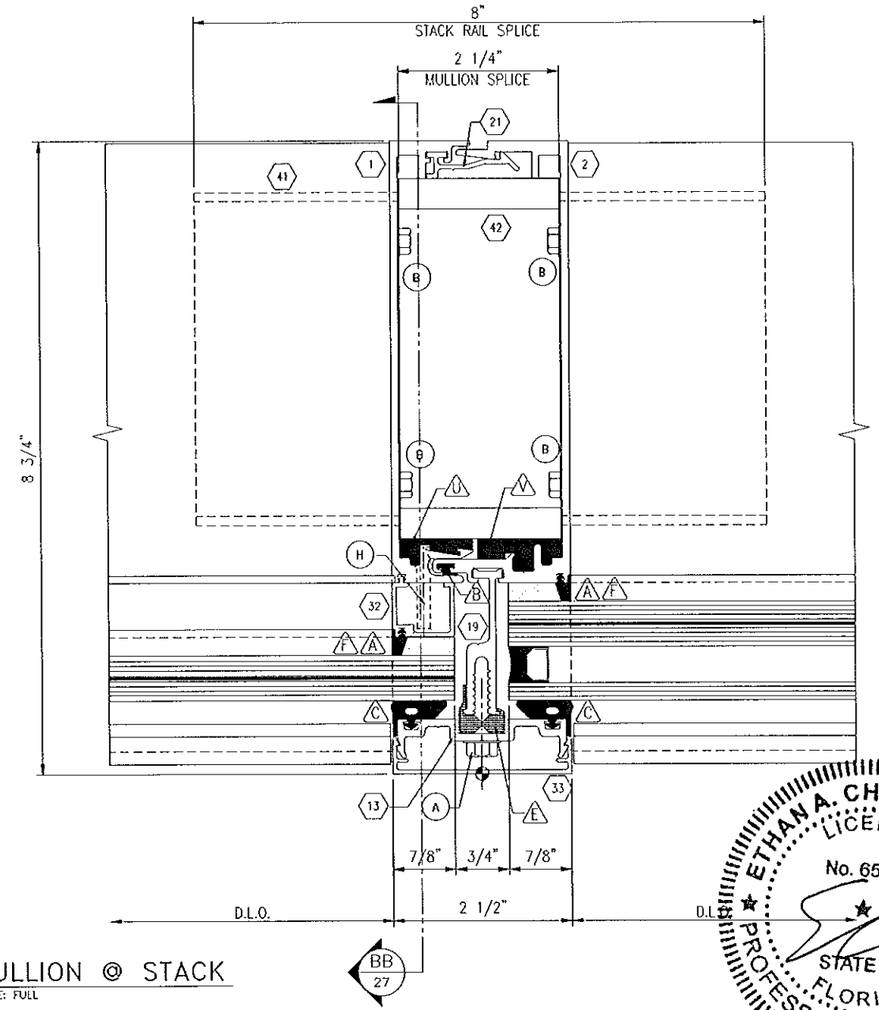

AA MULLION @ STACK
SCALE: FULL

ETHAN A. CHARPENTIER
LICENSE
No. 65106
STATE OF FLORIDA
PROFESSIONAL ENGINEER

OCT 09 2014

Larson Engineering, Inc.
3524 Labore Road
White Bear Lake, MN 55110
(P) 651.481.9120 (F) 651.481.9201

GENERAL NOTES:

- FOR PART IDENTIFICATION REFER TO SHEET 2
- FOR GLAZING DETAILS, GLASS BITE & GASKET CONFIGURATIONS SEE SHEET 3.

○ FASTENERS
△ GASKETS
⬡ ALUMINUM EXTRUSIONS

DADE CO. STAMP

PRODUCT REVISED
as complying with the Florida
Building Code
Acceptance No 14-0624.19
Expiration Date Sept 2, 2019
By Manuel Perez
Miami Dade Product Control

ENGINEER STAMP

Florida Firm No. F-02000005175
Certificate of Authorization #9803
Ethan A. Charpentier
Registration No. 65106

Harmon

HI 7000 LARGE MISSILE
STACK HORIZONTAL DETAIL
SECTION CUTS

DATE: 06/28/04	3 3/16/09
1 11/18/08	4 5/22/12
2 3/10/09	5 10/03/14

DWG. NO. HI7000LM

L:\EngineeringSales\Systems\Hurricane System\09-23-2014 NOA Dwg Revisions\HI7000 LMI 2010 FBC\028_HI7000_lm.dwg - dbenson - 10/3/2014 9:47 AM

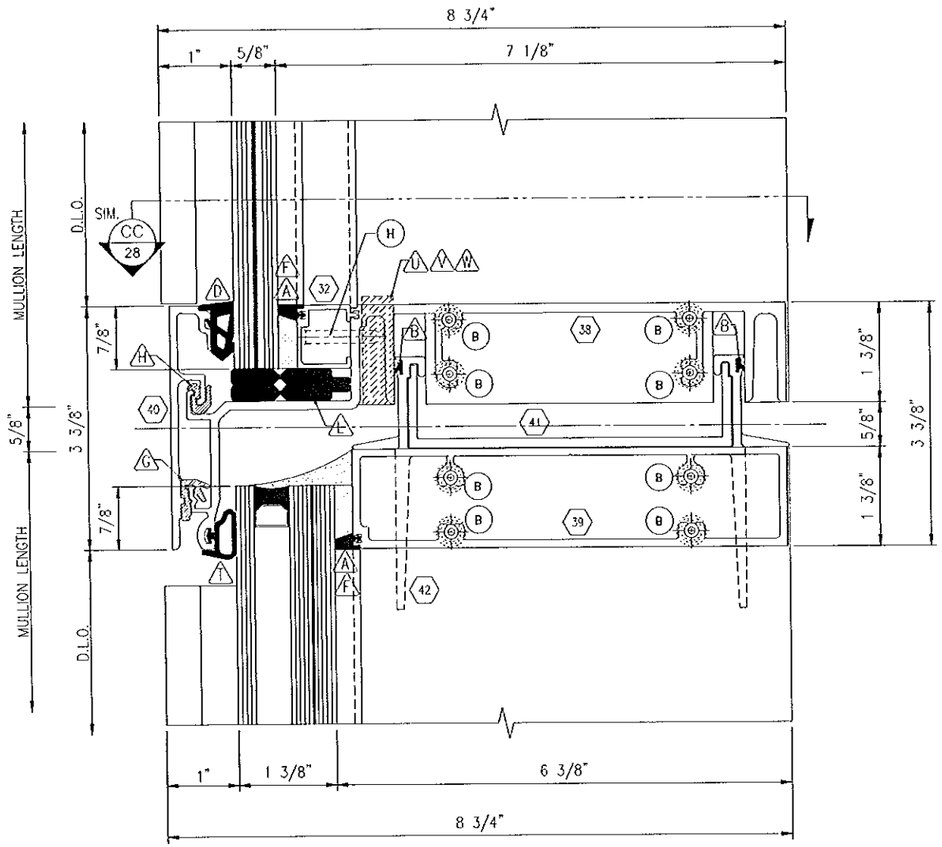

9 STACK HORIZONTAL
SCALE: FULL

MAXIMUM DLO WIDTH=57 1/2"
MAXIMUM SHEAR AT STACK=3,695#

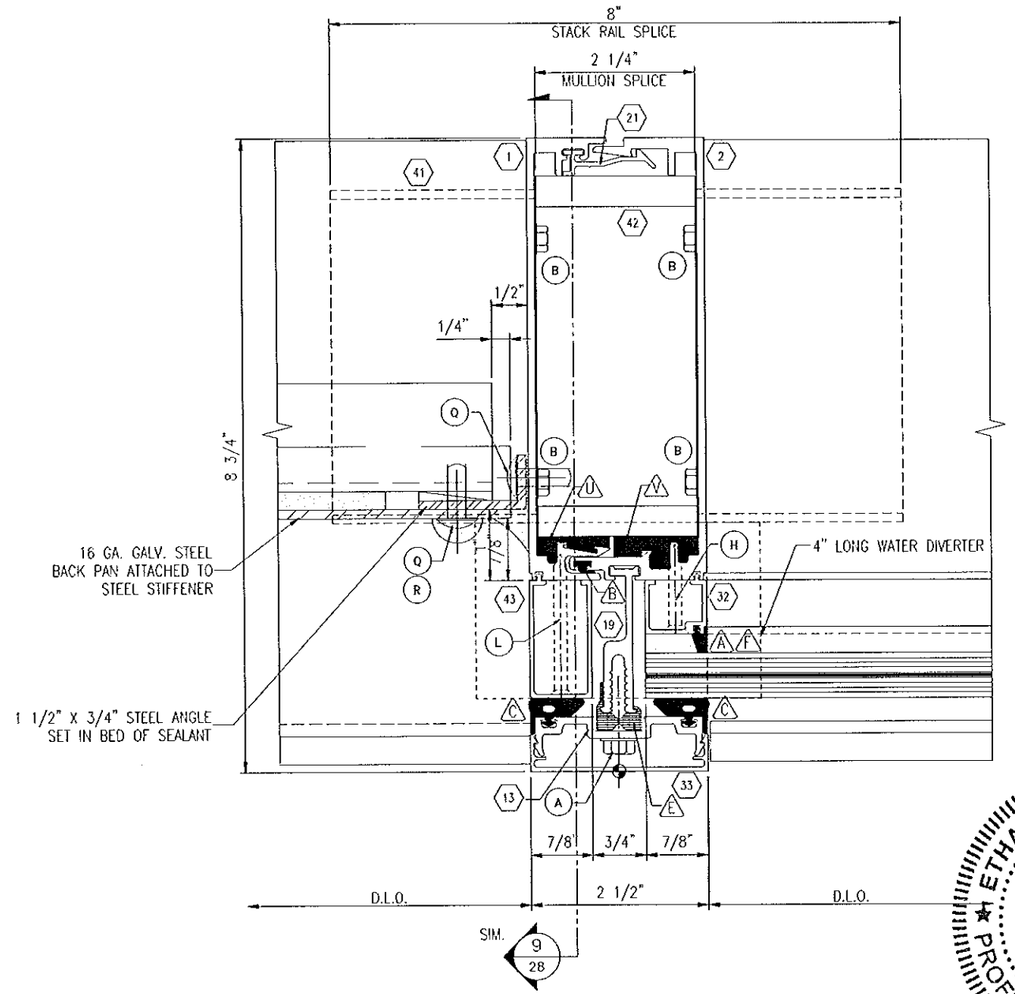

CC MULLION @ STACK
SCALE: FULL

ETHAN A. CHARPENTIER
LICENSE
No. 65106
STATE OF
FLORIDA
PROFESSIONAL ENGINEER

OCT 0 9 2014

Larson Engineering, Inc.
3524 Labore Road
White Bear Lake, MN 55110
(P) 651.481.9120 (F) 651.481.9201

GENERAL NOTES:

- FOR PART IDENTIFICATION REFER TO SHEET 2
- FOR GLAZING DETAILS, GLASS BITE & GASKET CONFIGURATIONS SEE SHEET 3.

◯ FASTENERS
△ GASKETS
⬡ ALUMINUM EXTRUSIONS

DADE CO. STAMP

PRODUCT REVISED
as complying with the Florida
Building Code
Acceptance No 14-0624.19
Expiration Date Sept. 2, 2019
By Miami-Dade Product Control

ENGINEER STAMP

Florida Firm No. F-02000005175
Certificate of Authorization #9803
Ethan A. Charpentier
Registration No. 65106

Harmon

HI 7000 LARGE MISSILE
STACK HORIZONTAL DETAIL
& SECTION CUT

DATE: 06/28/04	3 3/16/09
1 11/18/08	4 5/22/12
2 3/10/09	5 10/03/14

DWG. NO. HI7000LM

SHEET 28 OF 41

L:\EngineeringSales\Systems\Hurricane System\09-23-2014 NOA Dwg Revisions\HI7000 LMI 2010 FBC\029_HI7000_lm.dwg - dbenson - 10/3/2014 9:47 AM

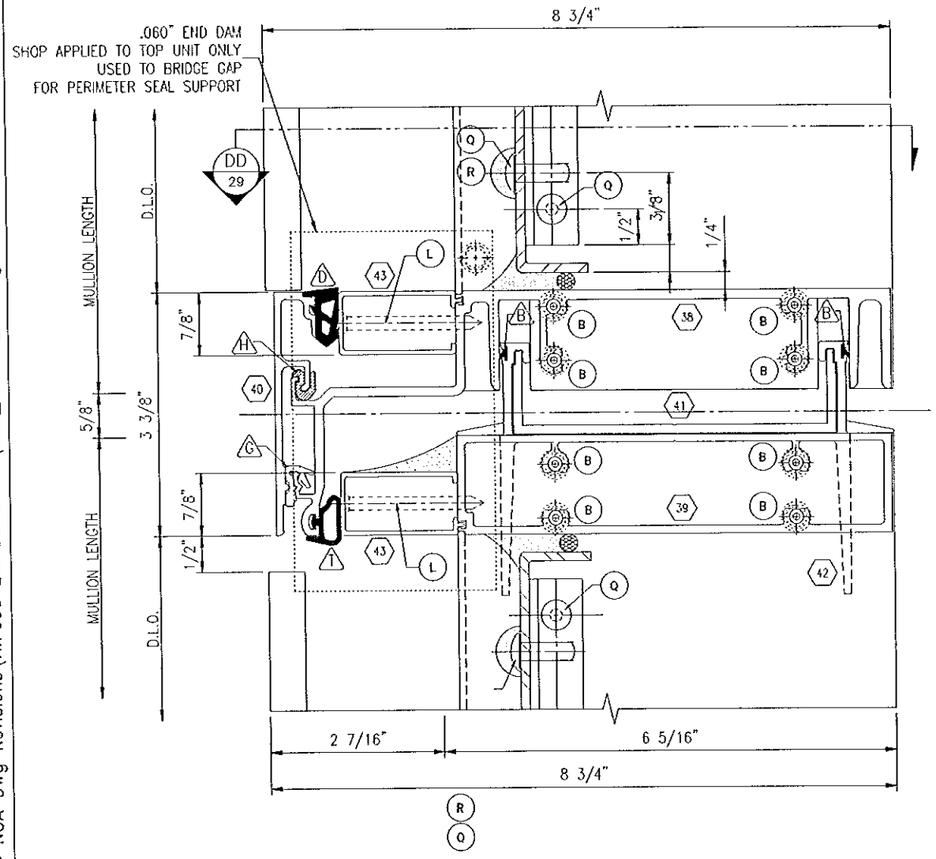

10 STACK HORIZONTAL ~ BACK PAN
SCALE: FULL

MAXIMUM DLO WIDTH=57 1/2"
MAXIMUM SHEAR AT STACK=3,695#

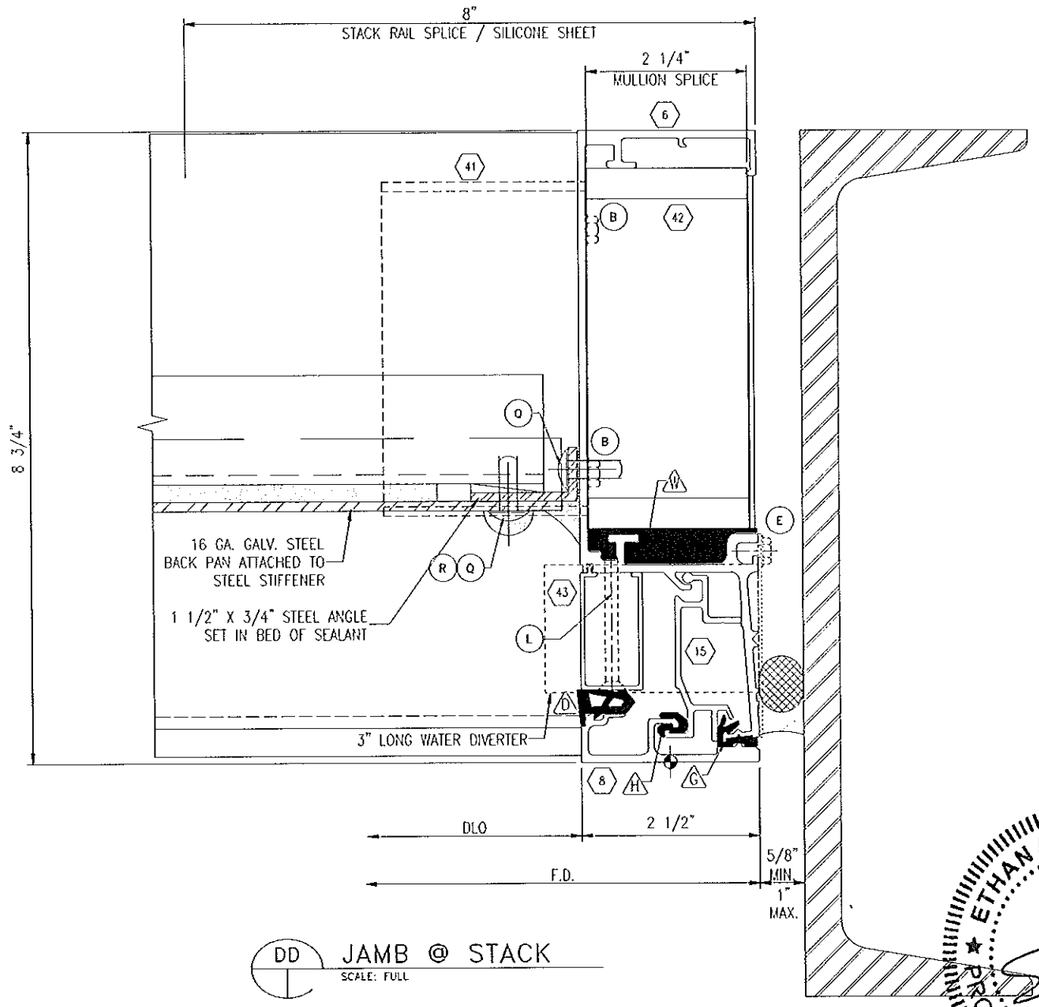

DD JAMB @ STACK
SCALE: FULL

ETHAN A. CHARPENTIER
LICENSE
No. 65106
STATE OF FLORIDA
PROFESSIONAL ENGINEER

Larson Engineering, Inc.
3524 Labore Road
White Bear Lake, MN 55110
(P) 651.481.9120 (F) 651.481.9201

OCT 0 9 2014

GENERAL NOTES:

- FOR PART IDENTIFICATION REFER TO SHEET 2
- FOR GLAZING DETAILS, GLASS BITE & GASKET CONFIGURATIONS SEE SHEET 3.

◯ FASTENERS
△ GASKETS
⬡ ALUMINUM EXTRUSIONS

DADE CO. STAMP

PRODUCT REVISED
as complying with the Florida
Building Code
Acceptance No 14-0624.19
Expiration Date Sept 2, 2019
By Manuel Perez
Miami-Dade Product Control

ENGINEER STAMP

Florida Firm No. F-02000005175
Certificate of Authorization #9803
Ethan A. Charpentier
Registration No. 65106

Harmon

HI 7000 LARGE MISSILE
STACK HORIZONTAL DETAIL
& SECTION CUT

DATE: 06/28/04	3 3/16/09
1 11/18/08	4 5/22/12
2 3/10/09	5 10/03/14

DWG. NO. HI7000LM

L:\EngineeringSales\Systems\Hurricane System\09-23-2014 NOA Dwg Revisions\HI7000 LMI 2010 FBC\030_HI7000_Im.dwg - dbenson - 10/3/2014 9:47 AM

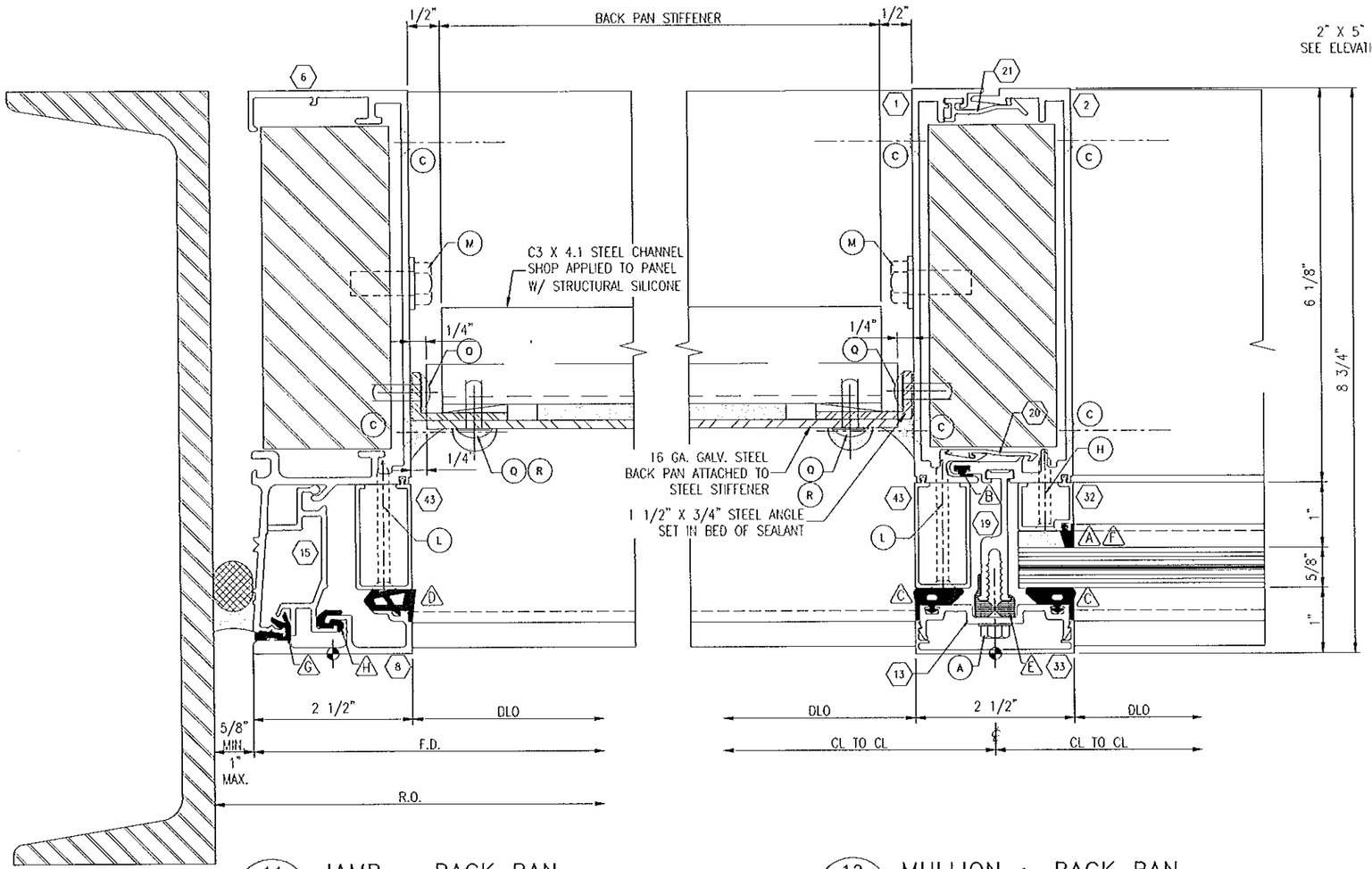

11 JAMB ~ BACK PAN
SCALE: FULL

12 MULLION ~ BACK PAN
SCALE: FULL

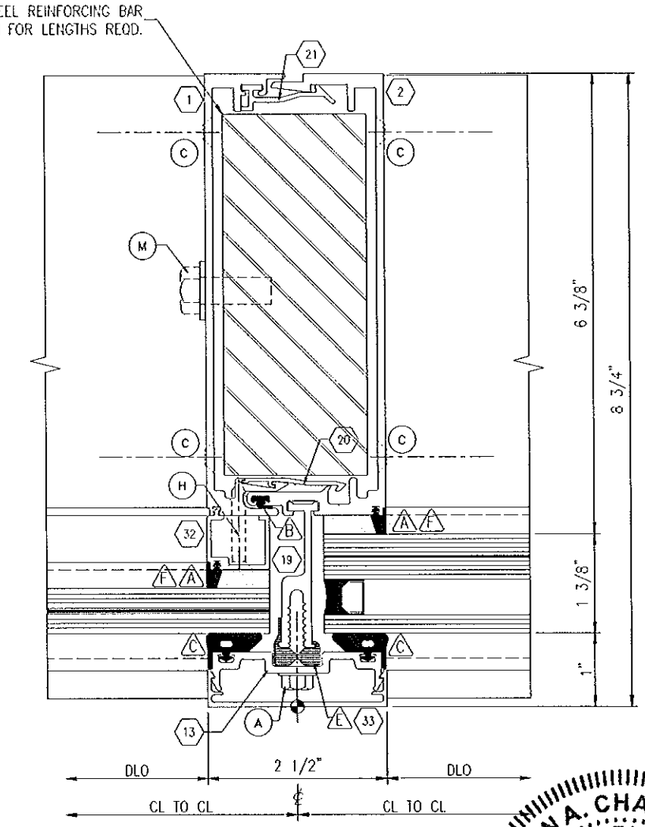

13 MULLION DETAIL
SCALE: FULL

ETHAN A. CHARPENTIER
LICENSE
No. 65106
STATE OF
FLORIDA
PROFESSIONAL ENGINEER

Larson Engineering, Inc.
3524 Labore Road
White Bear Lake, MN 55110
(P) 651.481.9120 (F) 651.481.9201

OCT 09 2014

GENERAL NOTES:

- FOR PART IDENTIFICATION REFER TO SHEET 2
- FOR GLAZING DETAILS, GLASS BITE & GASKET CONFIGURATIONS SEE SHEET 3.

◯ FASTENERS
△ GASKETS
⬡ ALUMINUM EXTRUSIONS

DADE CO. STAMP

PRODUCT REVISED
as complying with the Florida
Building Code
Acceptance No 14-0624.19
Expiration Date Sept 2, 2019
By Manuel Diaz
Miami Dade Product Control

ENGINEER STAMP

Florida Firm No. F-02000005175
Certificate of Authorization #9803
Ethan A. Charpentier
Registration No. 65106

Harmon

HI 7000 LARGE MISSILE
VERTICAL DETAILS

DATE: 06/28/04	3 3/16/09
1 11/18/08	4 5/22/12
2 3/10/09	5 10/03/14

DWG. NO. HI7000LM

SHEET 30 OF 41

L:\EngineeringSales\Systems\Hurricane System\09-23-2014 NOA Dwg Revisions\HI7000 LMI 2010 FBC\031_HI7000_lm.dwg - dbenson - 10/3/2014 9:47 AM

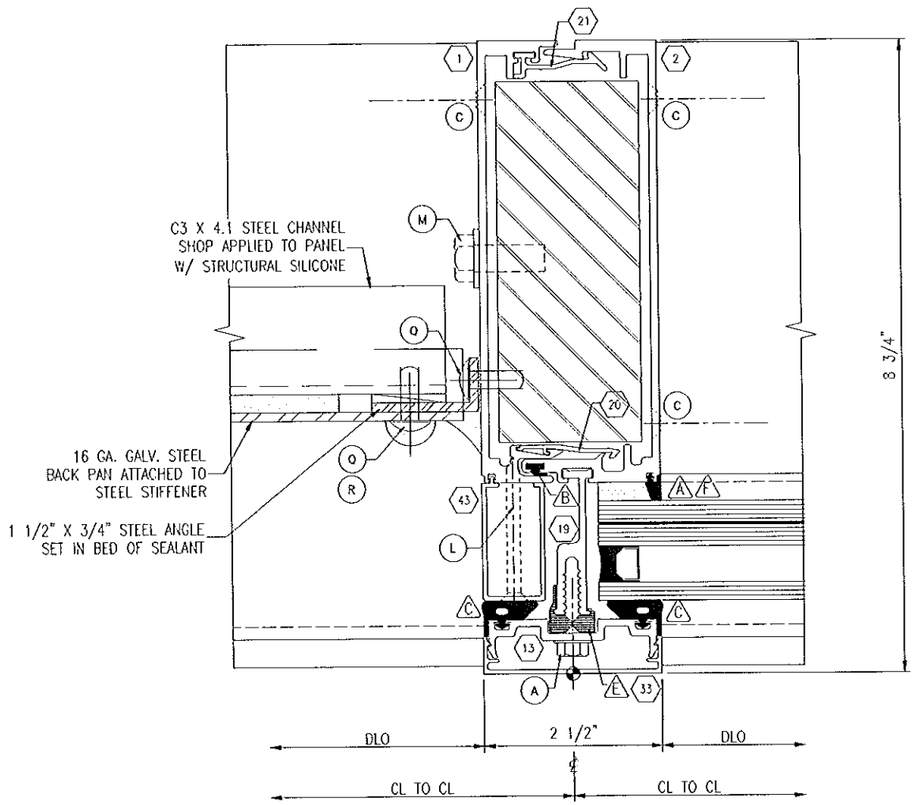

14 MULLION ~ BACK PAN
SCALE: FULL

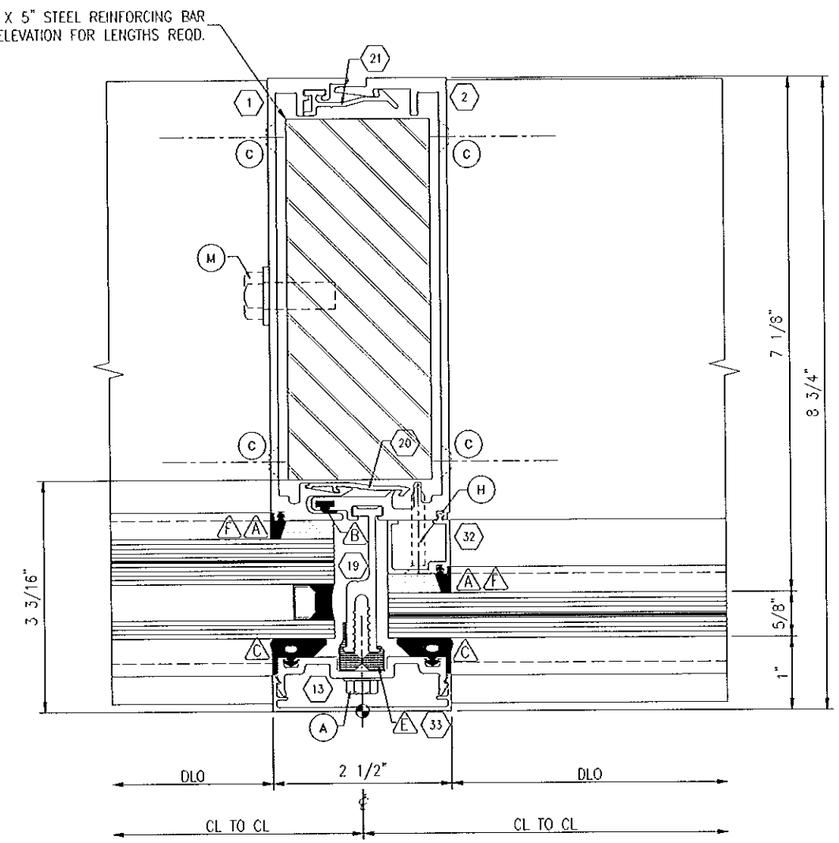

15 MULLION DETAIL
SCALE: FULL

ETHAN A. CHARPENTIER
LICENSE
No. 65106
STATE OF FLORIDA
PROFESSIONAL ENGINEER

OCT 0 9 2014

Larson Engineering, Inc.
3524 Labore Road
White Bear Lake, MN 55110
(P) 651.481.9120 (F) 651.481.9201

GENERAL NOTES:

- FOR PART IDENTIFICATION REFER TO SHEET 2
- FOR GLAZING DETAILS, GLASS BITE & GASKET CONFIGURATIONS SEE SHEET 3.

◯ FASTENERS
△ GASKETS
⬡ ALUMINUM EXTRUSIONS

DADE CO. STAMP

PRODUCT REVISED
as complying with the Florida
Building Code
Acceptance No 14-0624.19
Expiration Date Sept 7, 2019
By
Miami-Dade Product Control

ENGINEER STAMP

Florida Firm No. F-02000005175
Certificate of Authorization #9803
Ethan A. Charpentier
Registration No. 65106

Harmon

HI 7000 LARGE MISSILE
VERTICAL DETAILS

DATE: 06/28/04	3 3/16/09
1 11/18/08	4 5/22/12
2 3/10/09	5 10/03/14

DWG. NO. HI7000LM

L:\EngineeringSales\Systems\Hurricane System\09-23-2014 NOA Dwg Revisions\HI7000 LMI 2010 FBC\032_HI7000_lm.dwg - dbenson - 10/3/2014 9:47 AM

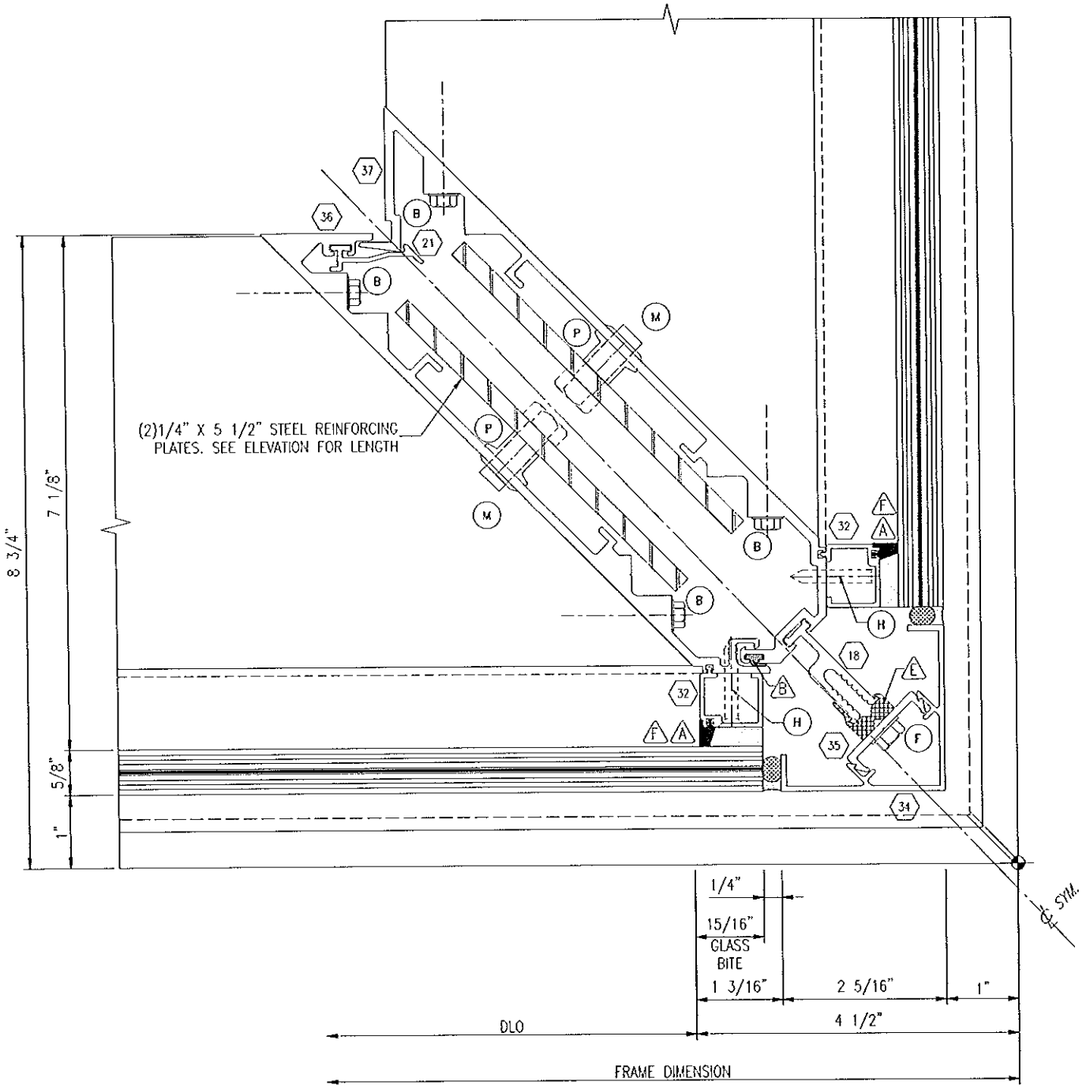

16 OUTSIDE CORNER
SCALE: FULL

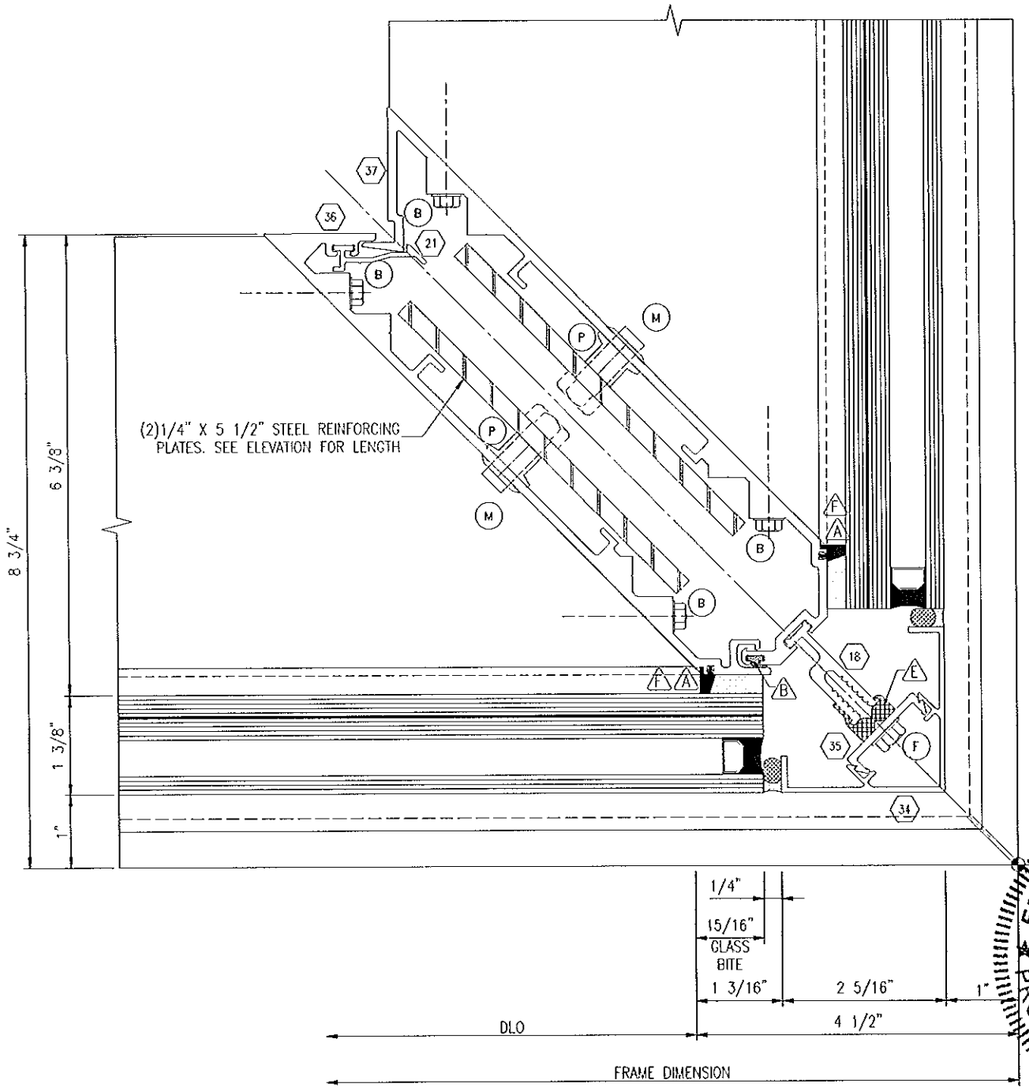

17 OUTSIDE CORNER
SCALE: FULL

ETHAN A. CHARPENTIER
LICENSE
No. 65106
STATE OF FLORIDA
PROFESSIONAL ENGINEER

Larson Engineering, Inc.
3524 Lobore Road
White Bear Lake, MN 55110
(P) 651.481.9120 (F) 651.481.9201

OCT 09 2014

GENERAL NOTES:

- FOR PART IDENTIFICATION REFER TO SHEET 2
- FOR GLAZING DETAILS, GLASS BITE & GASKET CONFIGURATIONS SEE SHEET 3.

○ FASTENERS
△ GASKETS
⬡ ALUMINUM EXTRUSIONS

DADE CO. STAMP
PRODUCT REVISED
as complying with the Florida Building Code
Acceptance No 14-0624.19
Expiration Date Sept. 2, 2019
By Manuel Sanz
Miami Dade Product Control

ENGINEER STAMP

Florida Firm No. F-02000005175
Certificate of Authorization #9803
Ethan A. Charpentier
Registration No. 65106

Harmon

HI 7000 LARGE MISSILE
CORNER DETAILS

DATE: 06/28/04	3 3/16/09
1 11/18/08	4 5/22/12
2 3/10/09	5 10/03/14

DWG. NO. HI7000LM

SHEET 32 OF 41

L:\EngineeringSales\Systems\Hurricane System\09-23-2014 NOA Dwg Revisions\HI7000 LMI 2010 FBC\033_HI7000_lm.dwg - dbenson - 10/3/2014 9:47 AM

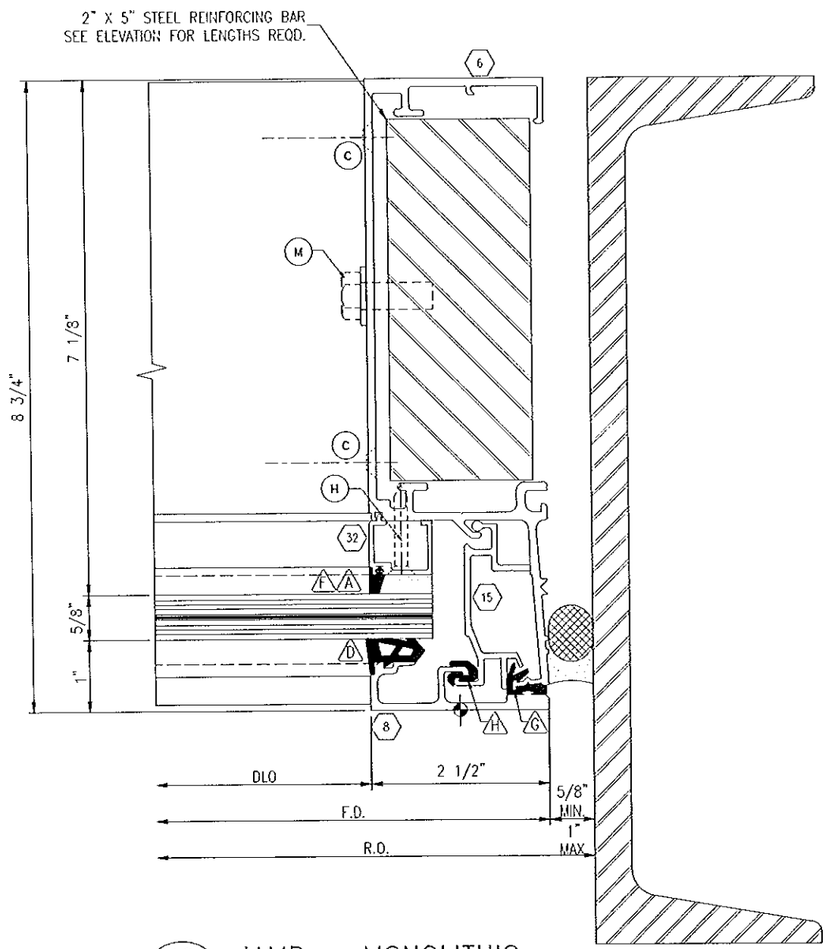

18 JAMB ~ MONOLITHIC
SCALE: FULL

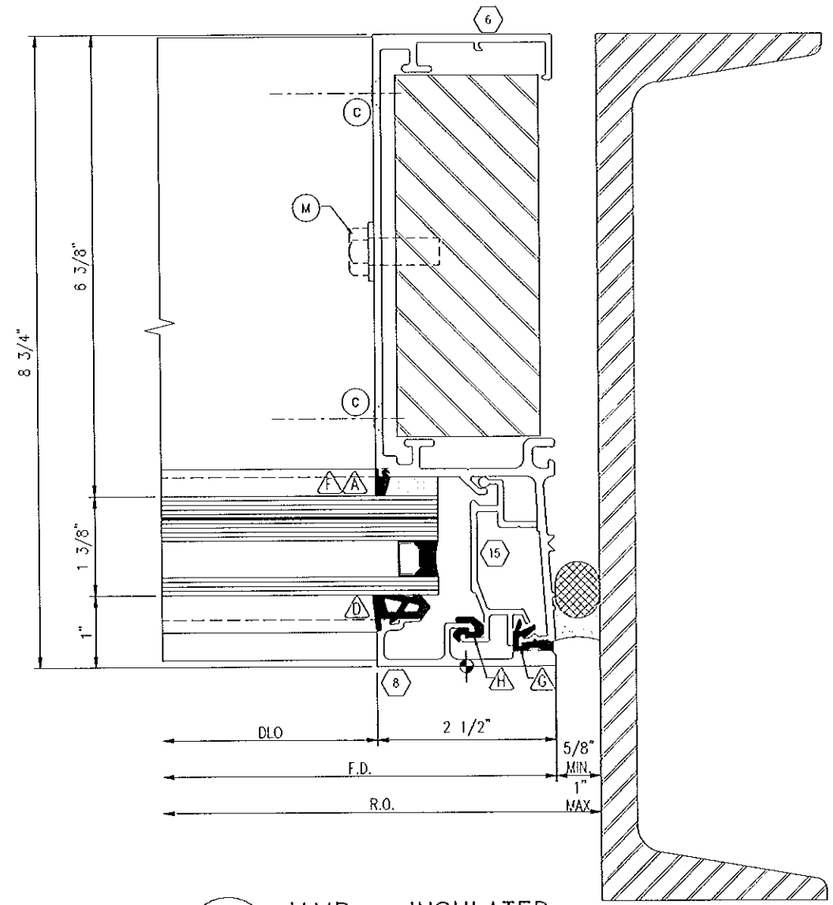

19 JAMB ~ INSULATED
SCALE: FULL

ETHAN A. CHARPENTIER
LICENSE
No. 65106
STATE OF FLORIDA
PROFESSIONAL ENGINEER

OCT 0 9 2014

Larson Engineering, Inc.
3524 Labore Road
White Bear Lake, MN 55110
(P) 651.481.9120 (F) 651.481.9201

GENERAL NOTES:

- FOR PART IDENTIFICATION REFER TO SHEET 2
- FOR GLAZING DETAILS, GLASS BITE & GASKET CONFIGURATIONS SEE SHEET 3.

◯ FASTENERS
△ GASKETS
⬡ ALUMINUM EXTRUSIONS

DADE CO. STAMP

PRODUCT REVISED
as complying with the Florida Building Code
Acceptance No 14-0624.19
Expiration Date Sept. 7, 2019
By Miami Dade Product Control

ENGINEER STAMP

Florida Firm No. F-02000005175
Certificate of Authorization #9803
Ethan A. Charpentier
Registration No. 65106

Harmon

HI 7000 LARGE MISSILE
VERTICAL DETAILS

DATE: 06/28/04	3 3/16/09
1 11/18/08	4 5/22/12
2 3/10/09	5 10/03/14

DWG. NO. HI7000LM

L:\EngineeringSales\Systems\Hurricane System\09-23-2014 NOA Dwg Revisions\HI7000 LMI 2010 FBC\034_HI7000_lm.dwg - dbenson - 10/6/2014 3:51 PM

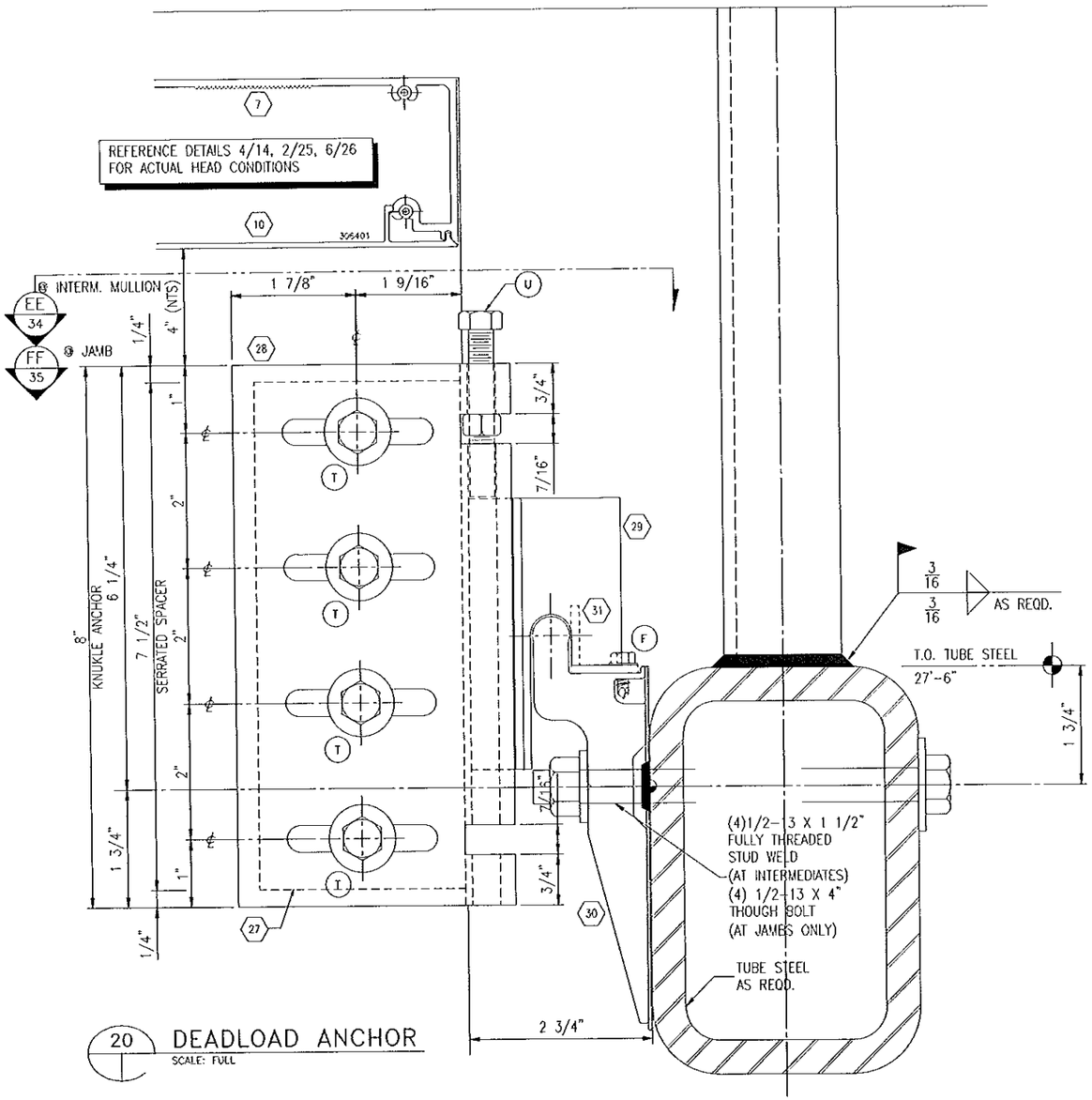

20 DEADLOAD ANCHOR
SCALE: FULL

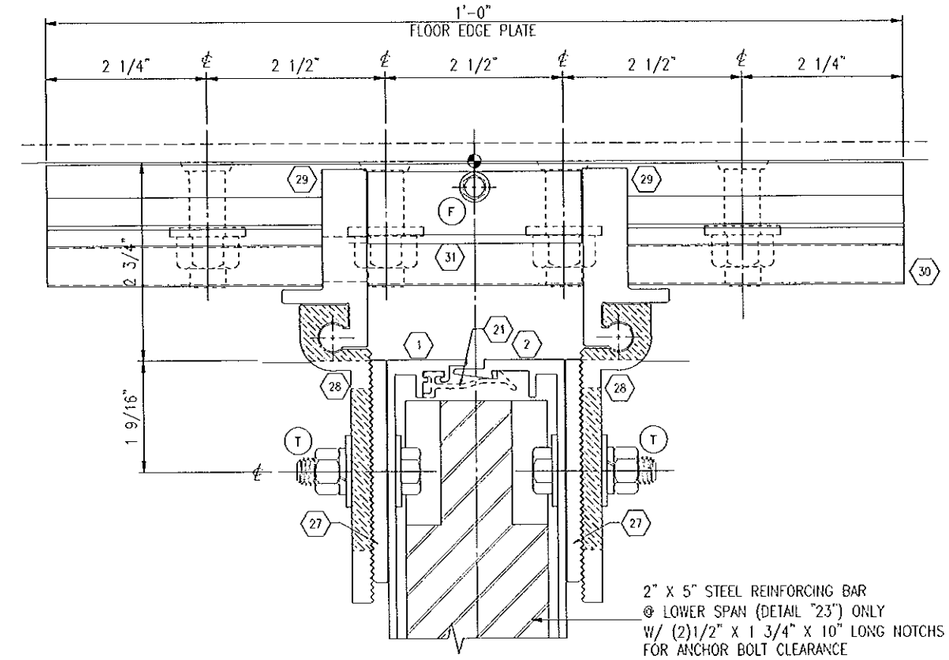

EE SECTION DETAIL @ MULLION
SCALE: FULL

ETHAN A. CHARPENTIER
LICENSE
No. 65106
STATE OF FLORIDA
PROFESSIONAL ENGINEER

OCT 0 9 2014

Larson Engineering, Inc.
3524 Labore Road
White Bear Lake, MN 55110
(P) 651.481.9120 (F) 651.481.9201

GENERAL NOTES:

- FOR PART IDENTIFICATION REFER TO SHEET 2
- FOR GLAZING DETAILS, GLASS BITE & GASKET CONFIGURATIONS SEE SHEET 3.

◯ FASTENERS
△ GASKETS
⬡ ALUMINUM EXTRUSIONS

DADE CO. STAMP

PRODUCT REVISED
as complying with the Florida Building Code
Acceptance No 14-0624.19
Expiration Date Sept. 2, 2019
By Miami Dade Product Control

ENGINEER STAMP

Florida Firm No. F-02000005175
Certificate of Authorization #9803
Ethan A. Charpentier
Registration No. 65106

Harmon

HI 7000 LARGE MISSILE ANCHOR DETAIL AND INTERMEDIATE ANCHOR SECTION

DATE: 06/28/04	3 3/16/09
1 11/18/08	4 5/22/12
2 3/10/09	5 10/03/14

DWG. NO. HI7000LM

SHEET 34 OF 41

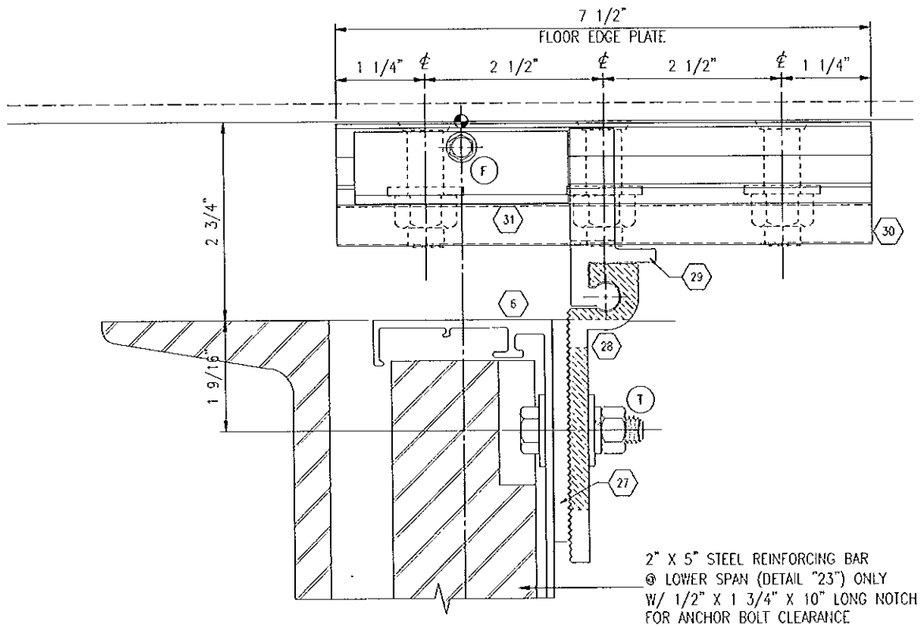

FF SECTION DETAIL @ JAMB
SCALE: FULL

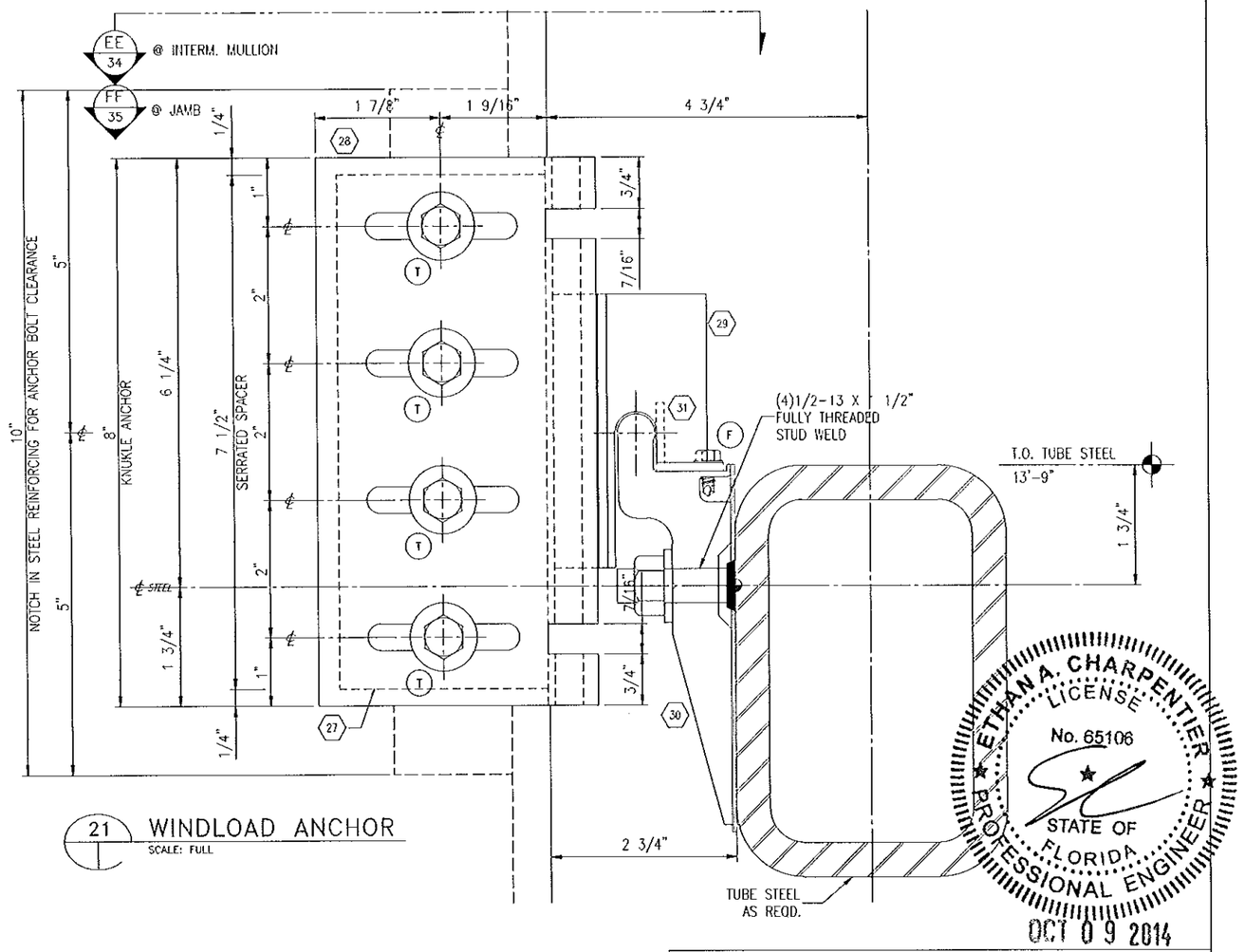

21 WINDLOAD ANCHOR
SCALE: FULL

ETHAN A. CHARPENTIER
LICENSE
No. 65106
STATE OF
FLORIDA
PROFESSIONAL ENGINEER
OCT 09 2014

Larson Engineering, Inc.
3524 Labore Road
White Bear Lake, MN 55110
(P) 651.481.9120 (F) 651.481.9201

GENERAL NOTES:

- FOR PART IDENTIFICATION REFER TO SHEET 2
- FOR GLAZING DETAILS, GLASS BITE & GASKET CONFIGURATIONS SEE SHEET 3.

◯ FASTENERS
△ GASKETS
⬡ ALUMINUM EXTRUSIONS

DADE CO. STAMP

PRODUCT REVISED
as complying with the Florida
Building Code
Acceptance No 14-0624.19
Expiration Date Sept. 2, 2019
By Manuel Inc
Miami-Dade Product Control

ENGINEER STAMP

Florida Firm No. F-02000005175
Certificate of Authorization #9803
Ethan A. Charpentier
Registration No. 65106

Harmon

HI 7000 LARGE MISSILE
ANCHOR DETAIL AND
JAMB ANCHOR SECTION CUT

DATE: 06/28/04	3 3/16/09
1 11/18/08	4 5/22/12
2 3/10/09	5 10/03/14

DWG. NO. HI7000LM

SHEET 35 OF 41

L:\EngineeringSales\Systems\Hurricane System\09-23-2014 NOA Dwg Revisions\HI7000 LMI 2010 FBC\035_HI7000_lm.dwg - dbenson - 10/3/2014 9:47 AM

L:\EngineeringSales\Systems\Hurricane System\09-23-2014 NOA Dwg Revisions\HI7000 LMI 2010 FBC\036_HI7000_lm.dwg - dbenson - 10/3/2014 9:47 AM

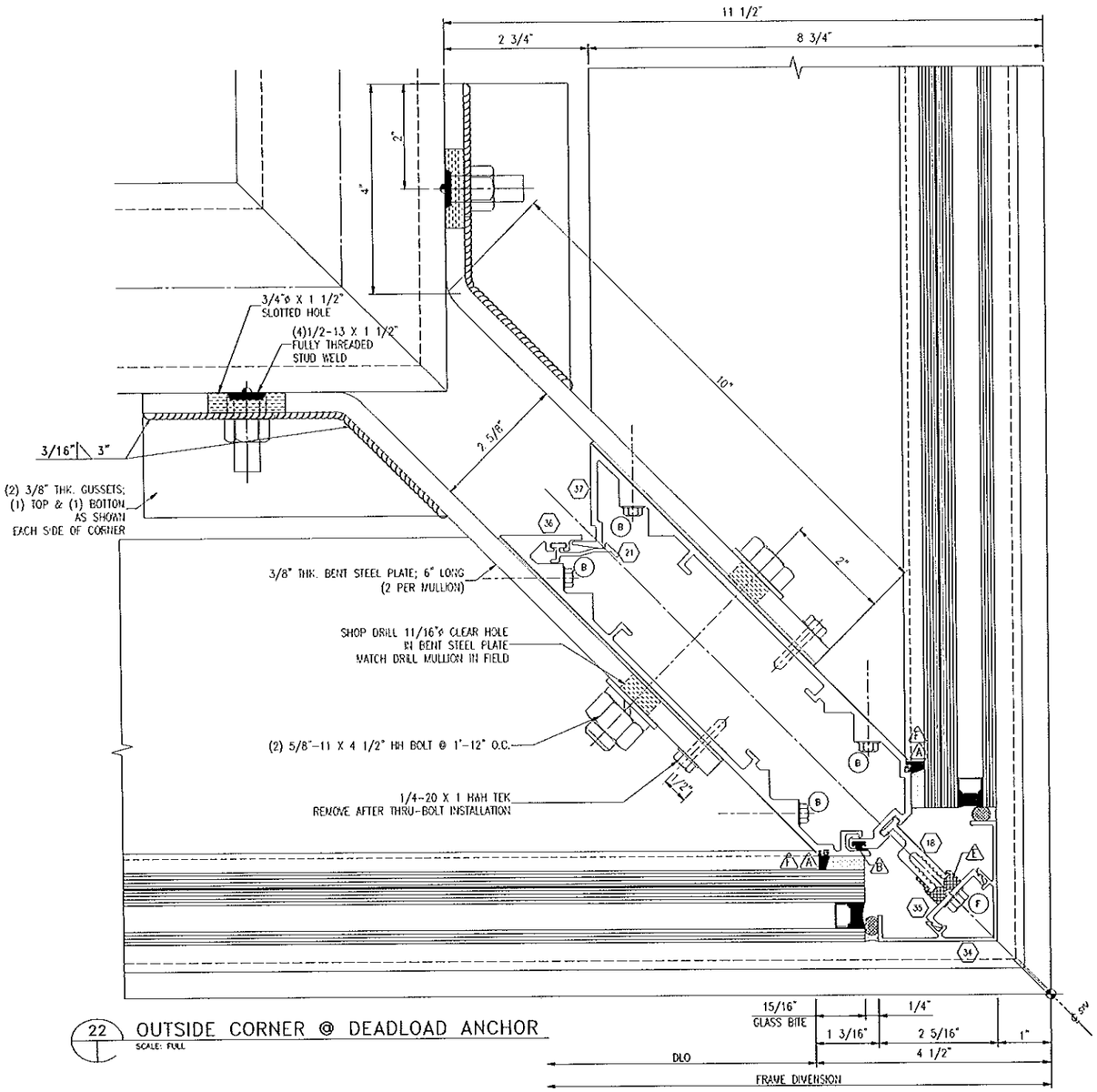

22 OUTSIDE CORNER @ DEADLOAD ANCHOR
SCALE: FULL

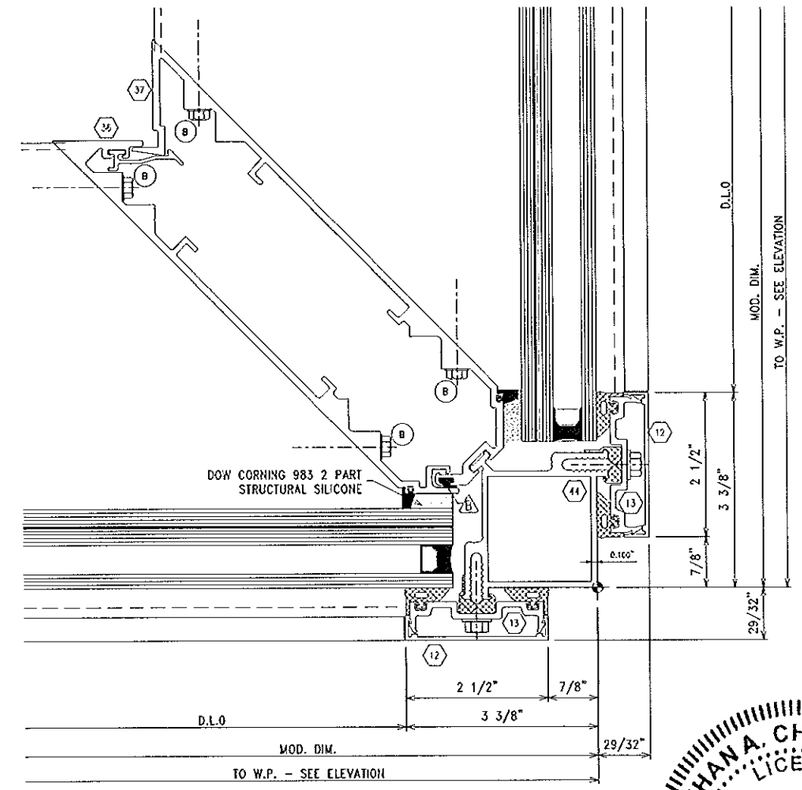

22A OPTIONAL CAPTURED CORNER COVER
SCALE: FULL

ETHAN A. CHARPENTIER
LICENSE
No. 65106
STATE OF FLORIDA
PROFESSIONAL ENGINEER
OCT 09 2014

Larson Engineering, Inc.
3524 Labore Road
White Bear Lake, MN 55110
(P) 651.481.9120 (F) 651.481.9201

GENERAL NOTES:

- FOR PART IDENTIFICATION REFER TO SHEET 2
- FOR GLAZING DETAILS, GLASS BITE & GASKET CONFIGURATIONS SEE SHEET 3.

○ FASTENERS
△ GASKETS
⬡ ALUMINUM EXTRUSIONS

DADE CO. STAMP

PRODUCT REVISED
as complying with the Florida Building Code
Acceptance No 14-0624.19
Expiration Date Sept 4, 2019
By Manuel Perez
Miami/Dade Product Control

ENGINEER STAMP

Florida Firm No. F-02000005175
Certificate of Authorization #9803
Ethan A. Charpentier
Registration No. 65106

Harmon

HI 7000 LARGE MISSILE
CORNER ANCHOR DETAIL
OPTIONAL CORNER COVER

DATE: 06/28/04		3	3/16/09
1	11/18/08	4	5/22/12
2	3/10/09	5	10/03/14

DWG. NO. HI7000LM

L:\EngineeringSales\Systems\Hurricane System\09-23-2014 NOA Dwg Revisions\HI7000 LMI 2010 FBC\037_HI7000_lm.dwg - dbenson - 10/3/2014 9:47 AM

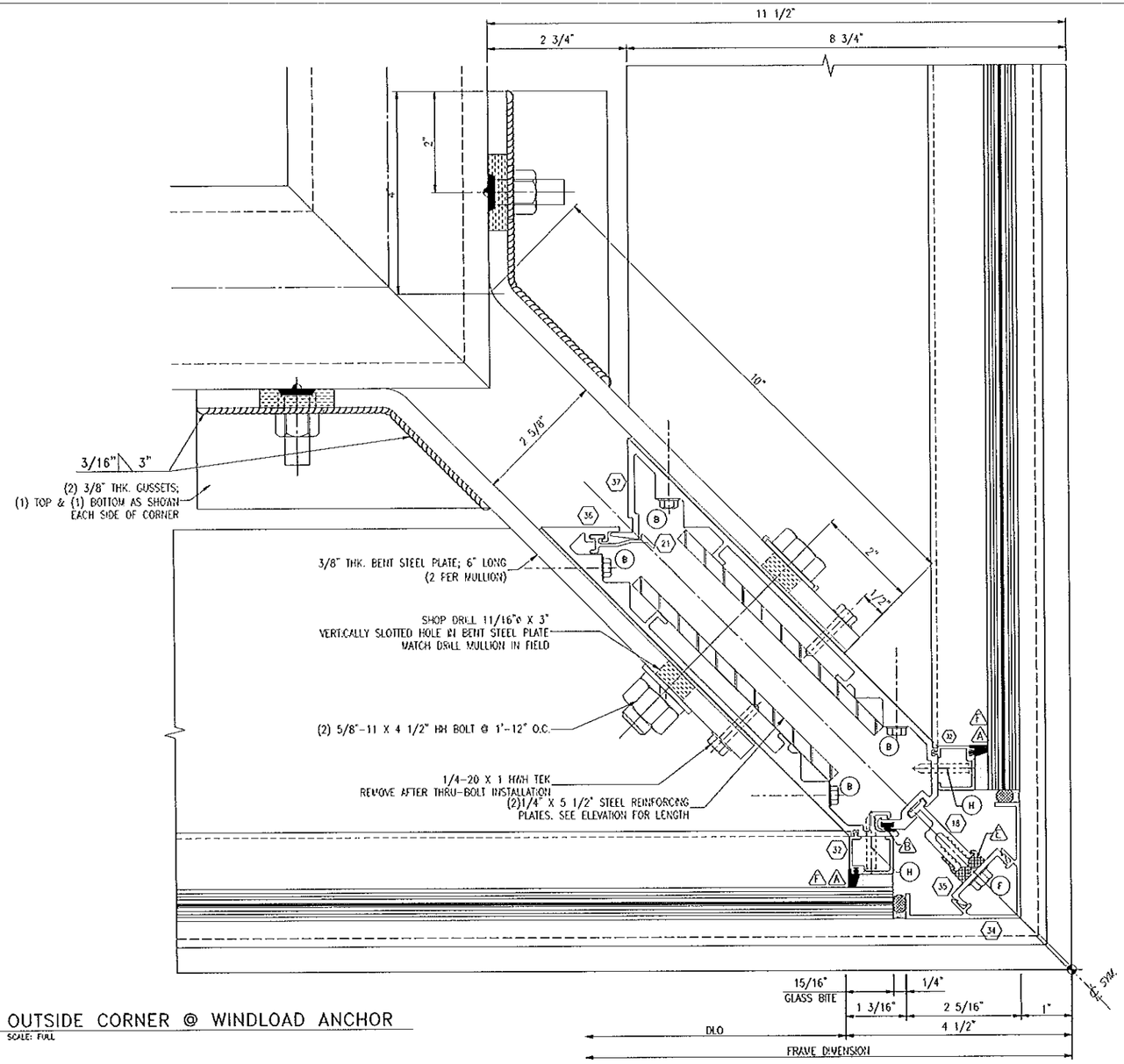

23 OUTSIDE CORNER @ WINDLOAD ANCHOR
SCALE: FULL

ETHAN A. CHARPENTIER
LICENSE
No. 65106
STATE OF FLORIDA
PROFESSIONAL ENGINEER

OCT 0 9 2014

Larson Engineering, Inc.
3524 Labore Road
White Bear Lake, MN 55110
(P) 651.481.9120 (F) 651.481.9201

GENERAL NOTES:

- FOR PART IDENTIFICATION REFER TO SHEET 2
- FOR GLAZING DETAILS, GLASS BITE & GASKET CONFIGURATIONS SEE SHEET 3.

◯ FASTENERS
△ GASKETS
⬡ ALUMINUM EXTRUSIONS

DADE CO. STAMP

PRODUCT REVISED
as complying with the Florida
Building Code
Acceptance No 14-0624.19
Expiration Date Sept. 2, 2019
By Manuel Perez
Miami Dade Product Control

ENGINEER STAMP

Florida Firm No. F-02000005175
Certificate of Authorization #9803
Ethan A. Charpentier
Registration No. 65106

Harmon

HI 7000 LARGE MISSILE
CORNER ANCHOR DETAIL

DATE: 06/28/04	3 3/16/09
1 11/18/08	4 5/22/12
2 3/10/09	5 10/03/14

DWG. NO. HI7000LM

L:\EngineeringSales\Systems\Hurricane System\09-23-2014 NOA Dwg Revisions\HI7000 LMI 2010 FBC\038_HI7000_lm.dwg - dbenson - 10/3/2014 9:47 AM

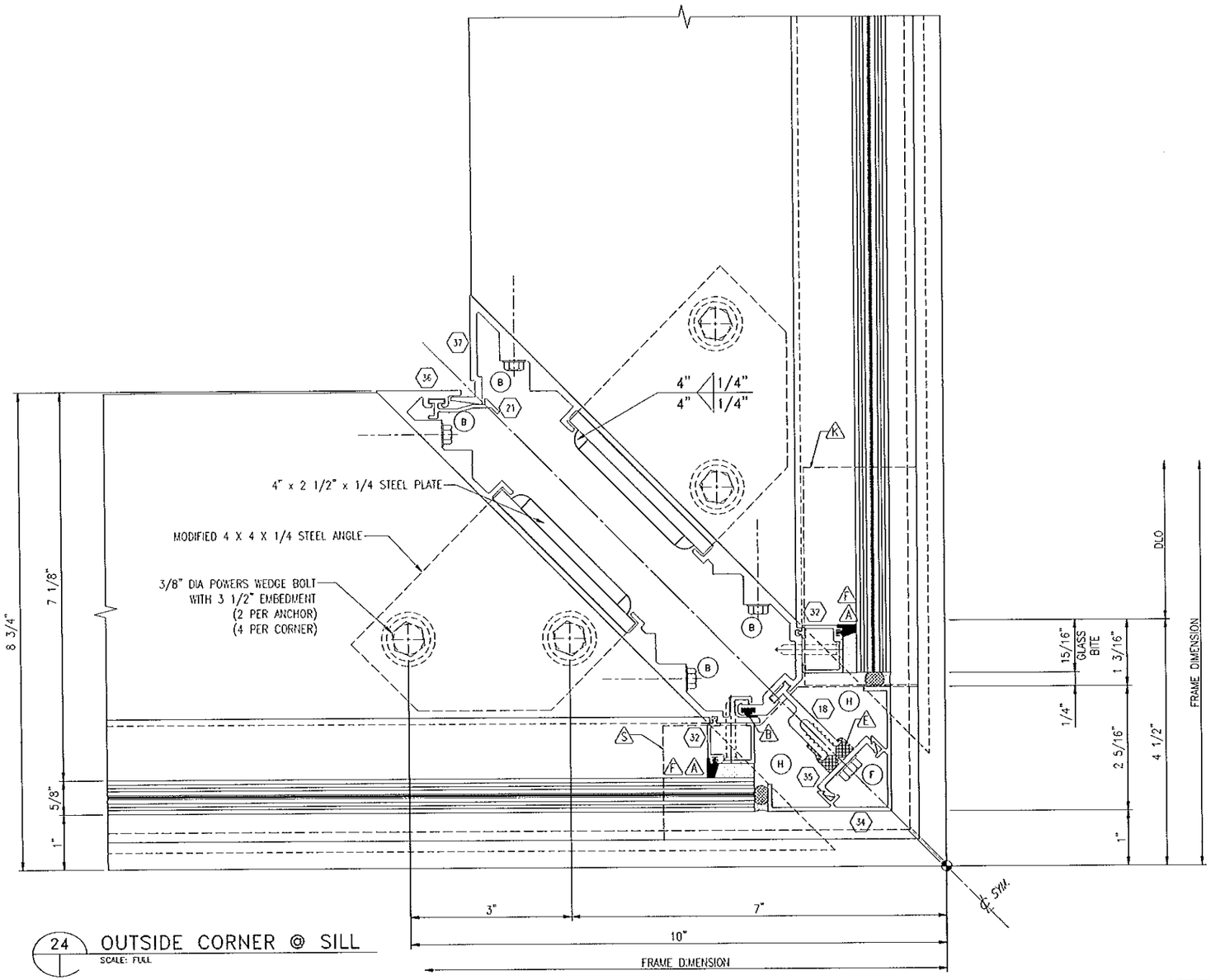

24 OUTSIDE CORNER @ SILL
SCALE: FULL

ETHAN A. CHARPENTIER
LICENSE
No. 65106
STATE OF FLORIDA
PROFESSIONAL ENGINEER

OCT 0 9 2014

Larson Engineering, Inc.
3524 Labore Road
White Bear Lake, MN 55110
(P) 651.481.9120 (F) 651.481.9201

GENERAL NOTES:

- FOR PART IDENTIFICATION REFER TO SHEET 2
- FOR GLAZING DETAILS, GLASS BITE & GASKET CONFIGURATIONS SEE SHEET 3.

○ FASTENERS
△ GASKETS
⬡ ALUMINUM EXTRUSIONS

DADE CO. STAMP

PRODUCT REVISED
as complying with the Florida Building Code
Acceptance No 14-0624.19
Expiration Date Sept. 2, 2019
By Manuel Fernandez
Miami Dade Product Control

ENGINEER STAMP

Florida Firm No. F-02000005175
Certificate of Authorization #9803
Ethan A. Charpentier
Registration No. 65106

Harmon

HI 7000 LARGE MISSILE
CORNER ANCHOR DETAIL

DATE: 06/28/04	3 3/16/09
1 11/18/08	4 5/22/12
2 3/10/09	5 10/03/14

DWG. NO. HI7000LM

SHEET 38 OF 41

L:\EngineeringSales\Systems\Hurricane System\09-23-2014 NOA Dwg Revisions\HI7000 LMI 2010 FBC\039_HI7000_lm.dwg - dbenson - 10/3/2014 9:47 AM

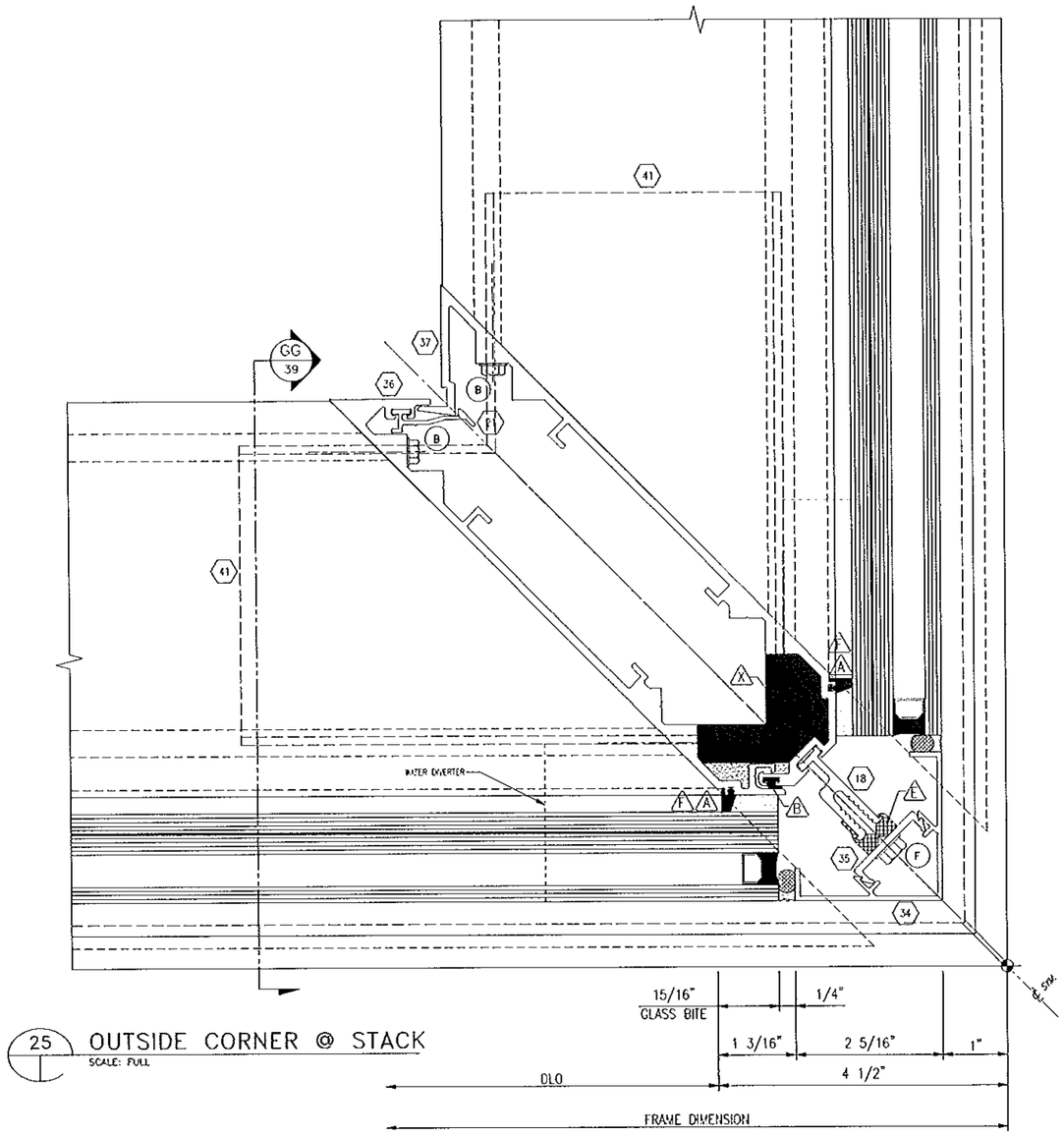

25 OUTSIDE CORNER @ STACK
SCALE: FULL

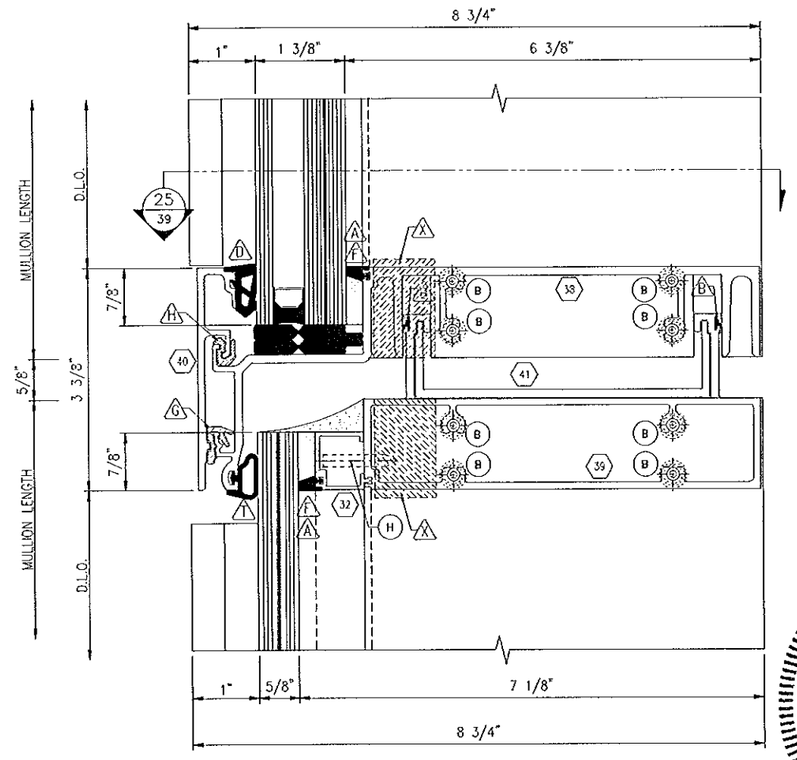

GG STACK HORIZONTAL @ CORNER
SCALE: FULL

ETHAN A. CHARPENTIER
LICENSE
No. 65106
STATE OF FLORIDA
PROFESSIONAL ENGINEER

OCT 0 9 2014

Larson Engineering, Inc.
3524 Labore Road
White Bear Lake, MN 55110
(P) 651.481.9120 (F) 651.481.9201

GENERAL NOTES:

- FOR PART IDENTIFICATION REFER TO SHEET 2
- FOR GLAZING DETAILS, GLASS BITE & GASKET CONFIGURATIONS SEE SHEET 3.

◯ FASTENERS
△ GASKETS
⬡ ALUMINUM EXTRUSIONS

DADE CO. STAMP

PRODUCT REVISED
as complying with the Florida Building Code
Acceptance No 14-0624.19
Expiration Date Sept. 2, 2014
By Manuel Perez
Miami Dade Product Control

ENGINEER STAMP

Florida Firm No. F-02000005175
Certificate of Authorization #9803
Ethan A. Charpentier
Registration No. 65106

Harmon

HI 7000 LARGE MISSILE
CORNER DETAIL AND
SECTION CUT AT STACK HORIZ.

DATE: 06/28/04	3 3/16/09
1 11/18/08	4 5/22/12
2 3/10/09	5 10/03/14

DWG. NO. HI7000LM

L:\EngineeringSales\Systems\Hurricane System\09-23-2014 NOA Dwg Revisions\HI7000 LMI 2010 FBC\040_HI7000_lm.dwg - dbenson - 10/3/2014 9:47 AM

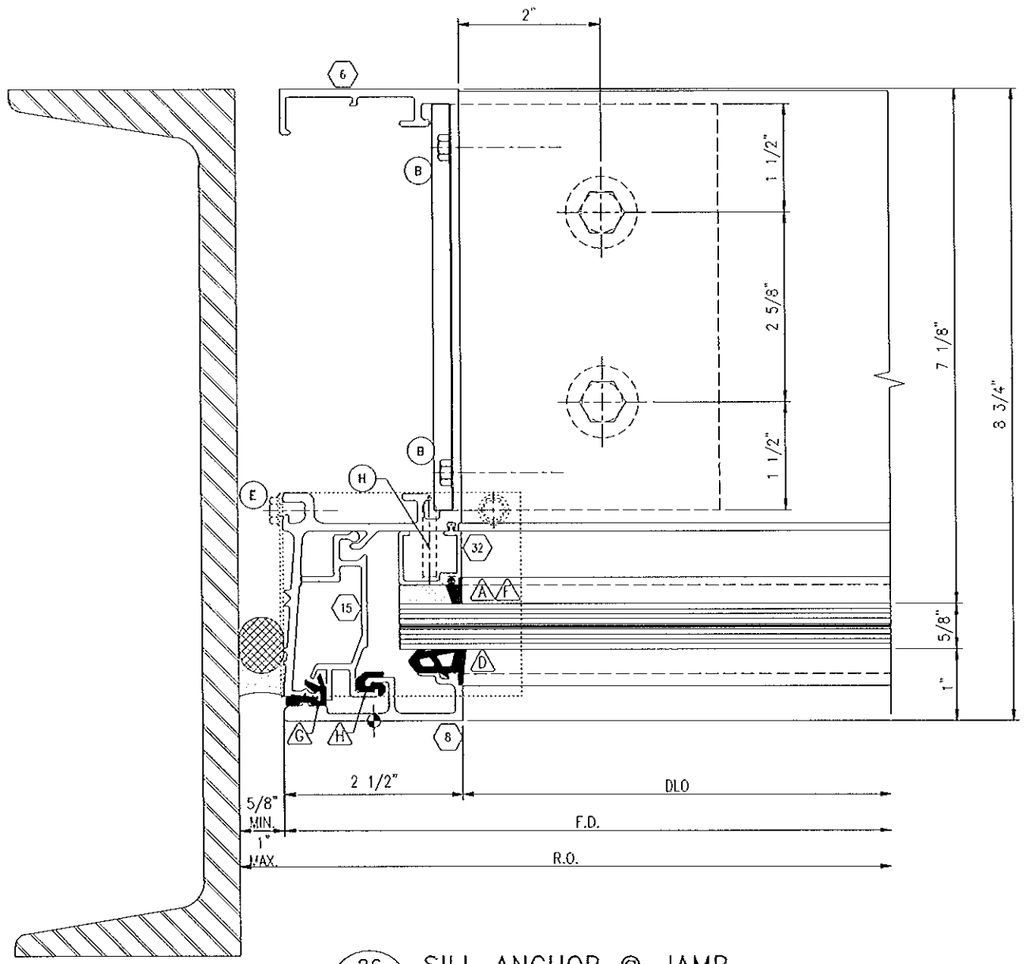

26 SILL ANCHOR @ JAMB
SCALE: FULL

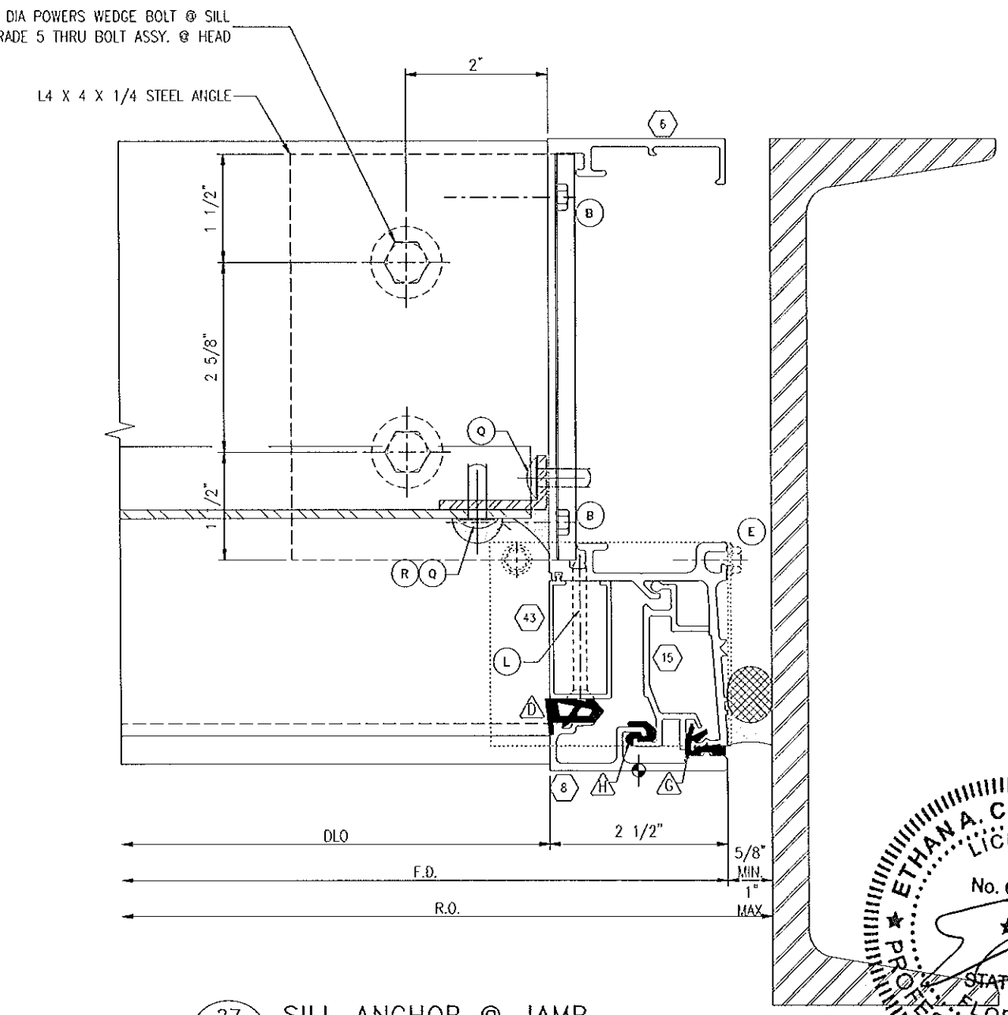

27 SILL ANCHOR @ JAMB
SCALE: FULL

ETHAN A. CHARPENTIER
LICENSE
No. 65106
STATE OF FLORIDA
PROFESSIONAL ENGINEER
OCT 0 9 2014

Larson Engineering, Inc.
3524 Labore Road
White Bear Lake, MN 55110
(P) 651.481.9120 (F) 651.481.9201

GENERAL NOTES:

- FOR PART IDENTIFICATION REFER TO SHEET 2
- FOR GLAZING DETAILS, GLASS BITE & GASKET CONFIGURATIONS SEE SHEET 3.

○ FASTENERS
△ GASKETS
⬡ ALUMINUM EXTRUSIONS

DADE CO. STAMP
PRODUCT REVISED
as complying with the Florida Building Code
Acceptance No 14-0624.19
Expiration Date Sept 7, 2019
By Manuel Perez
Miami Dade Product Control

ENGINEER STAMP

Florida Firm No. F-02000005175
Certificate of Authorization #9803
Ethan A. Charpentier
Registration No. 65106

Harmon

HI 7000 LARGE MISSILE
VERTICAL DETAILS

DATE: 06/28/04	3 3/16/09
1 11/18/08	4 5/22/12
2 3/10/09	5 10/03/14

DWG. NO. HI7000LM

L:\EngineeringSales\Systems\Hurricane System\09-23-2014 NOA Dwg Revisions\HI7000 LMI 2010 FBC\041_HI7000_lm.dwg - dbenson - 10/3/2014 9:47 AM

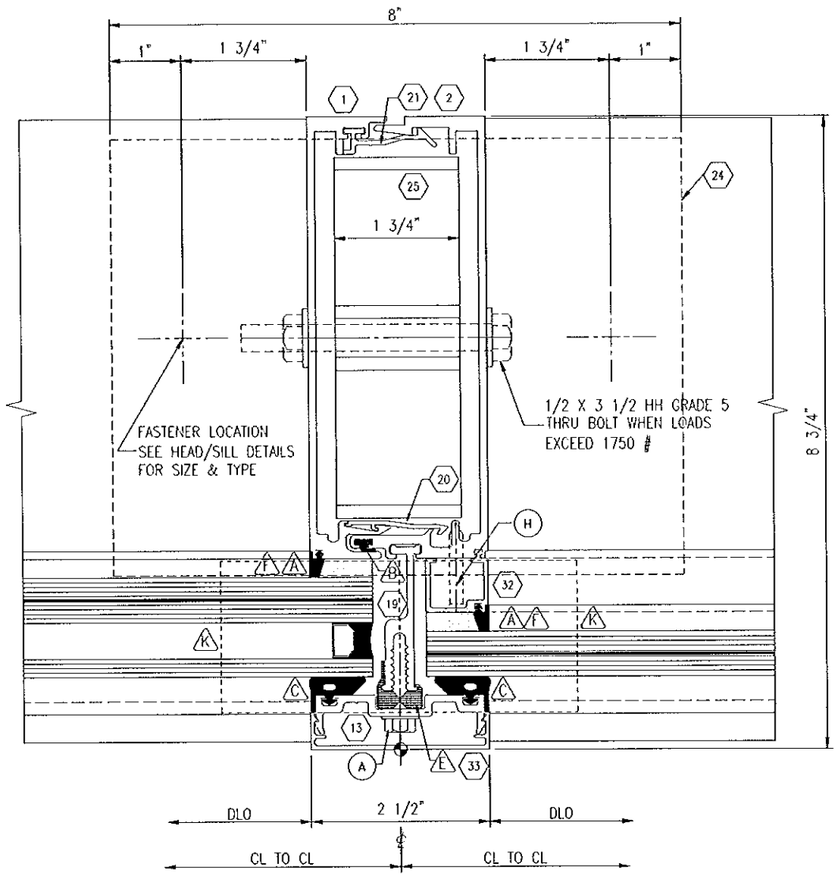

28 SILL ANCHOR @ MULLION
SCALE: FULL

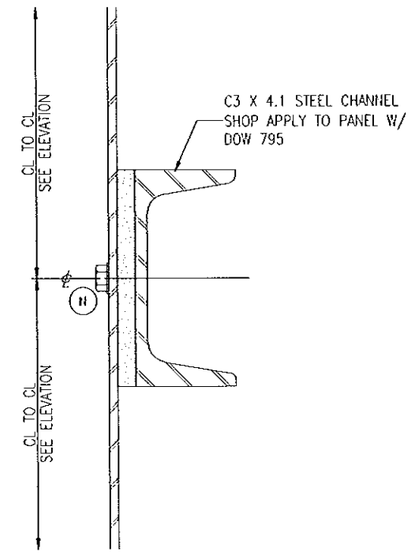

29 BACK-PAN STIFFENER
SCALE: FULL

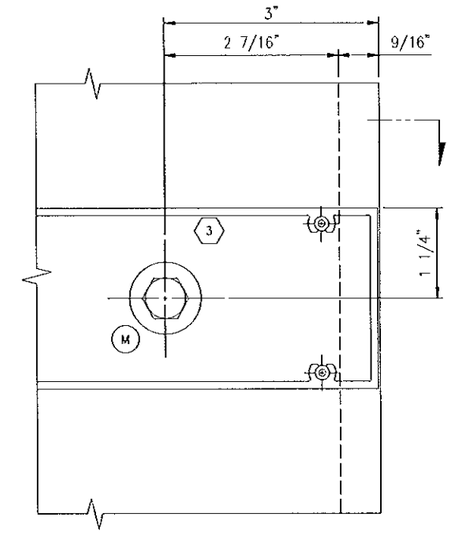

30 REINF. ATTACHMENT
SCALE: FULL

ETHAN A. CHARPENTIER
LICENSE
No. 65106
STATE OF FLORIDA
PROFESSIONAL ENGINEER

OCT 0 9 2014

Larson Engineering, Inc.
3524 Labore Road
White Bear Lake, MN 55110
(P) 651.481.9120 (F) 651.481.9201

GENERAL NOTES:

- FOR PART IDENTIFICATION REFER TO SHEET 2
- FOR GLAZING DETAILS, GLASS BITE & GASKET CONFIGURATIONS SEE SHEET 3.

○ FASTENERS
△ GASKETS
⬡ ALUMINUM EXTRUSIONS

DADE CO. STAMP

PRODUCT REVISED
- s complying with the Florida
Building Code
Acceptance No H-0624.19
Expiration Date Sept. 2, 2019
By Manuel Perez
Miami Dade Product Control

ENGINEER STAMP

Florida Firm No. F-02000005175
Certificate of Authorization #9803
Ethan A. Charpentier
Registration No. 65106

Harmon

HI 7000 LARGE MISSILE
SILL ANCHOR DETAIL, STIFFENER
DETAIL & REINF. ATTACHMENT

DATE: 06/28/04	3 3/16/09
1 11/18/08	4 5/22/12
2 3/10/09	5 10/03/14

DWG. NO. HI7000LM

SHEET 41 OF 41