MIAMI-DADE COUNTY
PRODUCT CONTROL SECTION
11805 SW 26 Street, Room 208
Miami, Florida 33175-2474
T (786) 315-2590 F (786) 315-2599
www.miamidade.gov/economy

DEPARTMENT OF REGULATORY AND ECONOMIC RESOURCES (RER)
BOARD AND CODE ADMINISTRATION DIVISION

NOTICE OF ACCEPTANCE (NOA)

CGI WINDOWS AND DOORS, INC.
10100 NW 25 Street
Miami, FL 33172

SCOPE:

This NOA is being issued under the applicable rules and regulations governing the use of construction materials. The documentation submitted has been reviewed and accepted by Miami-Dade County RER -Product Control Section to be used in Miami Dade County and other areas where allowed by the Authority Having Jurisdiction (AHJ).

This NOA shall not be valid after the expiration date stated below. The Miami-Dade County Product Control Section (In Miami Dade County) and/or the AHJ (in areas other than Miami Dade County) reserve the right to have this product or material tested for quality assurance purposes. If this product or material fails to perform in the accepted manner, the manufacturer will incur the expense of such testing and the AHJ may immediately revoke, modify, or suspend the use of such product or material within their jurisdiction. RER reserves the right to revoke this acceptance, if it is determined by Miami-Dade County Product Control Section that this product or material fails to meet the requirements of the applicable building code.

This product is approved as described herein, and has been designed to comply with the Florida Building Code, including the High Velocity Hurricane Zone.

DESCRIPTION: Series "Sentinel 150" Aluminum Sliding Glass Door w/ wo Reinforcements – L.M.I.

APPROVAL DOCUMENT: Drawing No. **W10–31 Rev K**, titled Series "150 Sentinel Aluminum Sliding Glass Door", sheets 1 through 16 of 16 (inclusive sheets 1.1, 6.1, 6.2, 9.1, 11.1, 12.1, 12.2 and 15.1, prepared by Al–Farooq Corporation, dated 05/20/10 and last revised on FEB 25, 2015, signed and sealed by Javad Ahmad, P. E., bearing the Miami–Dade County Product Control Revision stamp with the Notice of Acceptance number and Revision date by the Miami–Dade County Product Control Section.

MISSILE IMPACT RATING: Large and Small Missile Impact Resistant

Limitations:

1. Pocket wall is not part of this approval and to be reviewed by AHJ.
2. See Design Pressure (DP) table: Sizes Vs glass types, Interlock reinforcing & sill riser and the max allowable panels with in the unit frame area, in sheet 7. See anchor clusters DP capacity in sheet 8. Lower capacity shall controls for the entire assembly.
3. Max shim not to exceed ½" at Head/jambs & ½" at Sill (w/ High strength poured & hardened grout). The Sill to be installed w/ anchor type **B-2**, directly into conc.

LABELING: Each unit shall bear a permanent label with the manufacturer's name or logo, city, state and series and following statement: "Miami-Dade County Product Control Approved", noted herein.

RENEWAL of this NOA shall be considered after a renewal application has been filed and there has been no change in the applicable building code negatively affecting the performance of this product.

TERMINATION of this NOA will occur after the expiration date or if there has been a revision or change in the materials, use, and/or manufacture of the product or process. Misuse of this NOA as an endorsement of any product, for sales, advertising or any other purposes shall automatically terminate this NOA. Failure to comply with any section of this NOA shall be cause for termination and removal of NOA.

ADVERTISEMENT: The NOA number preceded by the words Miami-Dade County, Florida, and followed by the expiration date may be displayed in advertising literature. If any portion of the NOA is displayed, then it shall be done in its entirety.

INSPECTION: A copy of this entire NOA shall be provided to the user by the manufacturer or its distributors and shall be available for inspection at the job site at the request of the Building Official.

This NOA **revises & renews NOA # 13-1121.06** and consists of this page 1 and evidence pages E-1 & E-2, as well as approval document mentioned above.

The submitted documentation was reviewed by **Ishaq I. Chanda, P.E.**

MIAMI-DADE COUNTY APPROVED

2/26/15

CGI WINDOWS AND DOORS, INC.

NOTICE OF ACCEPTANCE: EVIDENCE SUBMITTED

A. DRAWINGS

1. Manufacturer's die drawings and sections.
2. Drawing No. **W10–31 Rev K**, titled Series "150 Sentinel Aluminum Sliding Glass Door", sheets 1 through 16 of 16 (inclusive sheets 1.1, 6.1, 6.2, 9.1, 11.1, 12.1, 12.2 and 15.1, prepared by Al–Farooq Corporation, dated 05/20/10 and last revised on FEB 25, 2015, signed and sealed and by Javad Ahmad, P. E.

B. TESTS

1. Test reports on: 1) Air Infiltration Test, per FBC, TAS 202-94
   2) Uniform Static Air Pressure Test, Loading per FBC TAS 202-94
   3) Water Resistance Test, per FBC, TAS 202-94
   4) Large Missile Impact Test per FBC, TAS 201-94
   5) Cyclic Wind Pressure Loading per FBC, TAS 203-94
   6) Forced Entry Test, per FBC 2411 3.2.1, TAS 202-94

   along with marked–up drawings and installation diagram of 6-panels Alum SGD w/ Pockets & OXXX, prepared by Certified Testing Laboratories, Test Report No. **CTLA -3011-W & -W-1**, dated May 22 & 23, 2014 respectively, both signed and sealed by Ramesh Patel, P. E.
   (Note this test reports have been revised by an addendum letter dated SEP 24, 2014, issued by Certified Testing lab.)
2. Test reports on: 1) Air Infiltration Test, per FBC, TAS 202-94
   2) Uniform Static Air Pressure Test, Loading per FBC TAS 202-94
   3) Water Resistance Test, per FBC, TAS 202-94
   4) Large Missile Impact Test per FBC, TAS 201-94
   5) Cyclic Wind Pressure Loading per FBC, TAS 203-94
   6) Forced Entry Test, per FBC 2411 3.2.1, TAS 202-94

   along with marked–up drawings and installation diagram of Alum SGD, prepared by Hurricane test Laboratory, LLC, Test Report No. **HTL–0080–1208–090**, dated July 30, 2010, signed and sealed by Vinu J. Abraham, P. E. (submitted under files #12-0119.04/11-1031.05)
   along with marked–up drawings and installation diagram of Alum. SGD (OX) prepared by Architectural Testing, Inc., Test Report No. **ATI–C0733.03–450–18**, dated 08/09/12, signed and sealed by Vinu J. Abraham, P. E. (submitted under files #13-1121.08 /#12-0821.16)

C. CALCULATIONS

1. Anchor verification calculations and structural analysis, complying with FBC-2014, prepared by Al Farooq Corporation, dated 06/26/14, 11/18/14 and last revised on FEB 17, 2015, signed and sealed by Javad Ahmad, P.E.
2. Glazing complies w/ ASTME-1300-02 -04& -09

D. QUALITY ASSURANCE

1. Miami Dade Department of Regulatory and Economic Resources (RER).

Ishaq I. Chanda

Ishaq I. Chanda, P.E.
Product Control Examiner
NOA No. 14-0627.15
Expiration Date: September 22, 2020
Approval Date: March 05 , 2015

NOTICE OF ACCEPTANCE: EVIDENCE SUBMITTED

E. MATERIAL CERTIFICATIONS

1. Notice of Acceptance No. **11–0624.02** issued to E.I. DuPont DeNemours, Inc. for the "**DuPont Sentry Glass® Interlayer**", expiring on 01/14/17.
2. Notice of Acceptance No. **1231.08** issued Eastman Chemical Company (MA) former Solutia Inc. for their "**Saflex CP-Saflex and Saflex HP Composites Interlayer w/ PET core**", expiring on 12/11/18.
3. Notice of Acceptance No. **12-1213.02** issued Eastman Chemical Company (MA) former Solutia Inc. for "**Saflex Clear or colored glass interlayer**", expiring on 05/21/16.

F. STATEMENTS

1. Statement letter dated 06/03/14, compliance to FBC2014 (**5th edition**) and No financial interest, prepared by Al Farooq Corporation, signed and sealed by Javad Ahmad, P.E.
2. Addendum letter dated SEP 24, 2014, issued by Certified Testing lab, signed and sealed by Ramesh Patel, P. E.
3. Lab Compliance statement, part of above referenced test report.

G. OTHER

1. This NOA **revises & renews** NOA # **13-1121.06**, expiring on Sep. 22, 2015.
2. Test proposals # **13-1098**, approved on Oct 02, 2013 and revised on FEB 24, 2014, signed by Manuel Perez, P.E., test proposal # 11-1225 dated DEC 16, 2011 signed by Jaime D. Gascon, P.E. Test proposal # **09–1073**, approved on Nov. 05, 2009 and E-mail test proposal dated 07-19-2010, approved by BCCO.

Ishaq I. Chanda

Ishaq I. Chanda, P.E.
Product Control Examiner
NOA No. 14-0627.15
Expiration Date: September 22, 2020
Approval Date: March 05 , 2015

PRODUCT REVISED
as complying with the Florida
Building Code,
Acceptance No. 14-0627.15
Expiration Date Sept 22, 2020
By [illegible]
Miami Dade Product Control

THESE DOORS ARE RATED FOR LARGE & SMALL MISSILE IMPACT.
SHUTTERS ARE NOT REQUIRED.

SERIES SENTINEL 150 ALUMINUM SLIDING GLASS DOOR

DOORS ALLOWED FOR MAX. NUMBER OF PANELS AS LISTED ON DESIGN LOAD CAPACITY CHART ON SHEET 7 OF 16, USING MEETING STILE COMBINATIONS TESTED AND SHOWN IN DRAWING DETAILS.

APPLICABLE EGRESS REQUIREMENTS PER FBC TO BE REVIEWED BY BUILDING OFFICIAL.

THIS PRODUCT HAS BEEN DESIGNED AND TESTED TO COMPLY WITH THE REQUIREMENTS OF THE FLORIDA BUILDING CODE INCLUDING HIGH VELOCITY HURRICANE ZONE (HVHZ).

1BY OR 2BY WOOD BUCKS BY OTHERS, MUST BE ANCHORED PROPERLY TO TRANSFER LOADS TO THE STRUCTURE.

ANCHORS SHALL BE AS LISTED, SPACED AS SHOWN ON DETAILS, ANCHORS EMBEDMENT TO BASE MATERIAL SHALL BE BEYOND WALL DRESSING OR STUCCO.

ANCHORING OR LOADING CONDITIONS NOT SHOWN IN THESE DETAILS ARE NOT PART OF THIS APPROVAL.

A LOAD DURATION INCREASE IS USED IN DESIGN OF ANCHORS INTO WOOD ONLY.

MATERIALS INCLUDING BUT NOT LIMITED TO STEEL/METAL SCREWS, THAT COME INTO CONTACT WITH OTHER DISSIMILAR MATERIALS SHALL MEET THE REQUIREMENTS OF THE FLORIDA BLDG. CODE.

INSTRUCTIONS:

USE CHARTS AS FOLLOWS.

STEP 1 DETERMINE DESIGN WIND LOAD REQUIREMENT BASED ON WIND VELOCITY, BLDG. HEIGHT, WIND ZONE USING APPLICABLE ASCE 7 STANDARD.

STEP 2 DETERMINE DOOR CAPACITY FROM TABLES ON SHEET 7 FOR THE GLASS TYPE AND REINFORCING TO USE.

STEP 3 USING CHARTS ON SHEET 8 SELECT ANCHOR OPTION WITH DESIGN RATING MORE THAN DESIGN LOAD SPECIFIED IN STEP 1 ABOVE.

STEP 4 THE LOWEST VALUE RESULTING FROM STEPS 2 AND 3 SHALL APPLY TO ENTIRE SYSTEM.

LAMINATED GLASS AND
LAMINATED INSULATING GLASS
LARGE/SMALL MISSILE IMPACT

Engr: JAVAD AHMAD
CIVIL
FLA. PE # 70592
C.A.N. 3538

FEB 25 2015

AL-FAROOQ CORPORATION
ENGINEERS & PRODUCT DEVELOPMENT
1235 S.W. 87 AVE
MIAMI, FLORIDA 33174
TEL. (305) 264-8100 FAX. (305) 262-6978
COMP-ANL\W10-31CGI

SERIES SENTINEL 150 ALUM SLIDING GLASS DOOR (L.M.I.)

CGI WINDOWS & DOORS
10100 N.W. 25TH STREET
MIAMI, FL. 33172
TEL (305) 593-6590 FAX. (305) 593-6592

revisions:

no	date	by	description
H	01.16.14		NO CHANGE THIS SHEET
I	06.09.14		GENERAL REVISION
J	11.12.14		REV. PER RER COMMENTS
K	02.03.15		REV. PER RER COMMENTS

date: 05-20-10
scale: 1/2"=1'-0"
dr. by:
chk. by:

drawing no.
W10-31

sheet 1 of 16

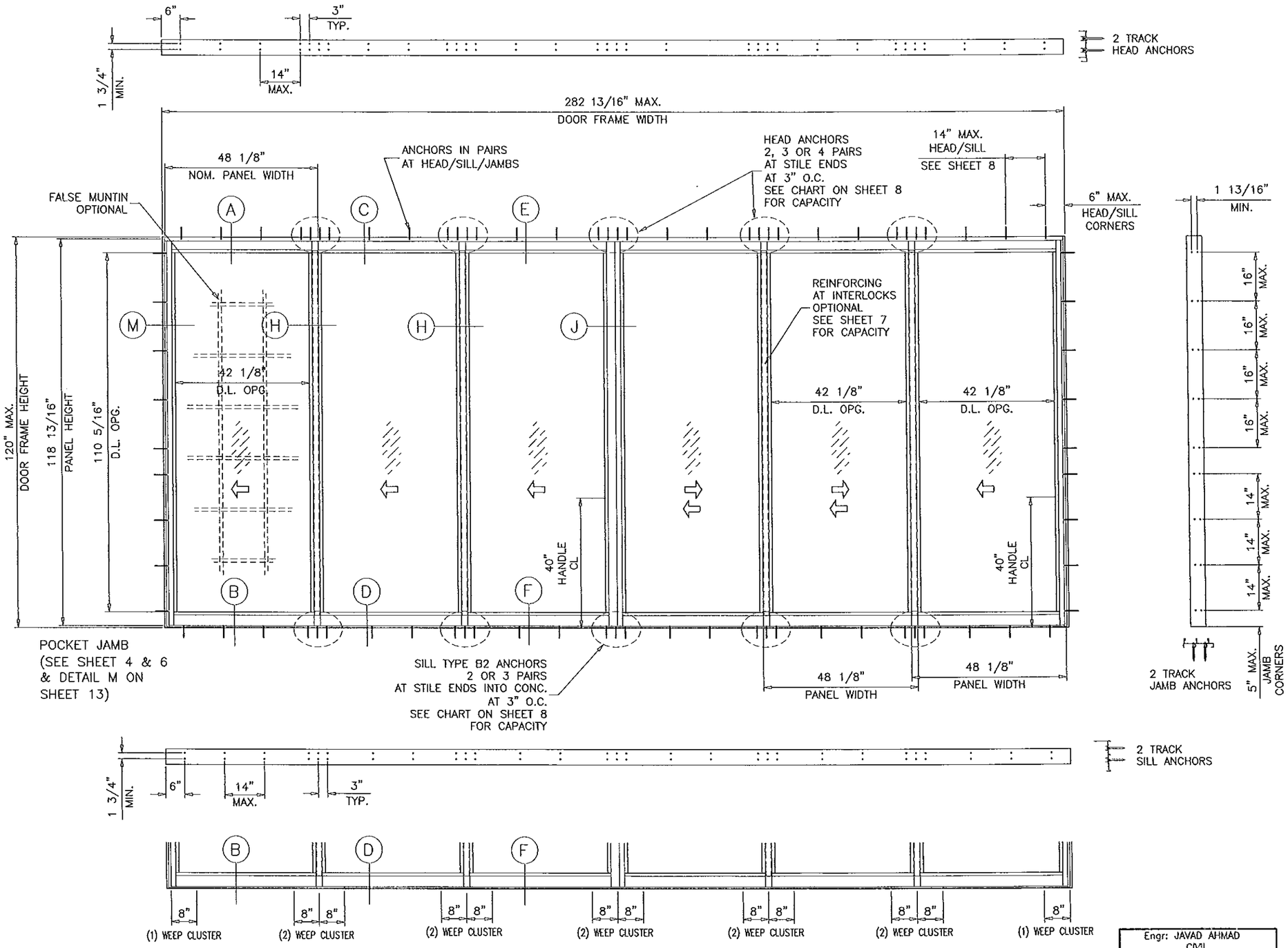

TYPICAL ELEVATION

TESTED UNIT

D.L. OPENING
D.L.O HEIGHT = DOOR FRAME HEIGHT – 9 11/16"
D.L.O. WIDTH = NOM. PANEL WIDTH – 6"
PANEL HEIGHT = DOOR FRAME HEIGHT –1 3/16"

PRODUCT REVISED
as complying with the Florida Building Code
Acceptance No. 14-0627.15
Expiration Date 9/22/20
By Shea L. Chanda
Miami Dade Product Control

Engr: JAVAD AHMAD
CIVIL
FLA. PE # 70592
C.A.N. 3638
FEB 25 2015

AL-FAROOQ CORPORATION
ENGINEERS & PRODUCT DEVELOPMENT
1235 S.W. 87 AVE
MIAMI, FLORIDA 33174
TEL. (305) 264-8100 FAX. (305) 262-6978
COMP-ANL\W10-31CGI

SERIES SENTINEL 150 ALUM SLIDING GLASS DOOR (L.M.I.)

CGI WINDOWS & DOORS
10100 N.W. 25TH STREET
MIAMI, FL. 33172
TEL (305) 593-6590 FAX. (305) 593-6592

revisions:

no	date	by	description
J	11.12.14		REV. PER RER COMMENTS
K	02.03.15		REV. PER RER COMMENTS

date: 05-20-10
scale: 3/8"=1'-0"
dr. by:
chk. by:

drawing no.
W10-31

sheet 1.1 of 16

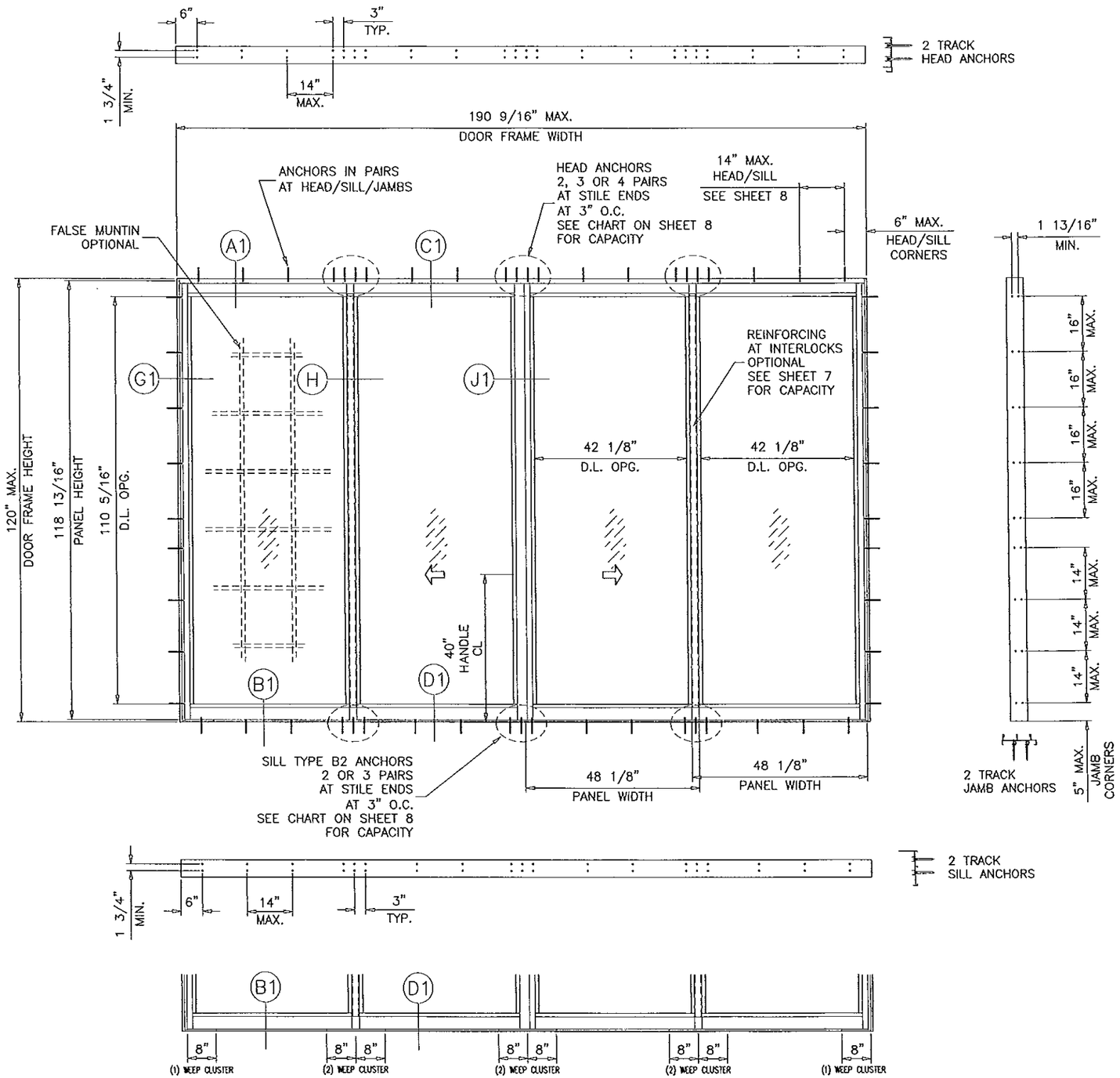

(TESTED UNIT)

TYPICAL ELEVATION

REFER TO PAGES 9, 9A, 11 & 11A FOR WEEP SIZE.

PRODUCT REVISED
as complying with the Florida Building Code
Acceptance No. 14-0622.15
Expiration Date 9/22/20
By
Miami Dade Product Control

D.L. OPENING
D.L.O HEIGHT = DOOR FRAME HEIGHT – 9 11/16"
D.L.O. WIDTH = NOM. PANEL WIDTH – 6"
PANEL HEIGHT = DOOR FRAME HEIGHT –1 3/16"

Engr: JAVAD AHMAD
CIVIL
FLA. PE # 70592
C.A.N. 3538

FEB 25 2015

AL-FAROOQ CORPORATION
ENGINEERS & PRODUCT DEVELOPMENT
1235 S.W. 87 AVE
MIAMI, FLORIDA 33174
TEL. (305) 264-8100 FAX. (305) 262-6978
COMP-ANL\W10-31CGI

SERIES SENTINEL 150 ALUM SLIDING GLASS DOOR (L.M.I.)

CGI WINDOWS & DOORS
10100 N.W. 25TH STREET
MIAMI, FL. 33172
TEL. (305) 593-6590 FAX. (305) 593-6592

revisions:

no	date	by	description
H	01.16.14		NO CHANGE THIS SHEET
I	06.09.14		GENERAL REVISION
J	11.12.14		REV. PER RER COMMENTS
K	02.03.15		REV. PER RER COMMENTS

date: 05-20-10
scale: 3/8"=1'-0"
dr. by:
chk. by:

drawing no.
W10-31

APPROVED CONFIGURATIONS
NON-POCKETED DOORS (NON-REINFORCED SHOWN)
SEE SHEET 7 FOR Dp AND REINFORCING OPTIONS

THREE (3) TRACKS

PRODUCT REVISED
as complying with the Florida
Building Code
Acceptance No. 14-0627.15
Expiration Date 9/22/20
By Ishwaj J. Chavda
Miami Dade Product Control

NOTE:
1. CONFIGURATIONS SHOWN FOR ILLUSTRATION PURPOSES ONLY.
2. FOR APPLICABLE NON REINFORCED OR REINFORCED DESIGN PRESSURES SEE SHEET 7.
3. FOR ANCHOR DETAILS SEE SHEETS 8 THRU 13.
4. DOOR SHALL MEET EGRESS REQUIREMENTS AS APPLICABLE PER FBC.

Engr: JAVAD AHMAD
CIVIL
FLA. PE # 70592
C.A.N. 3538

FEB 25 2015

AL-FAROOQ CORPORATION
ENGINEERS & PRODUCT DEVELOPMENT
1235 S.W. 87 AVE
MIAMI, FLORIDA 33174
TEL. (305) 264-8100 FAX. (305) 262-6978

COMP-ANL\W10-31CGI

SERIES SENTINEL 150 ALUM SLIDING GLASS DOOR (L.M.I.)

CGI WINDOWS & DOORS
10100 N.W. 25TH STREET
MIAMI, FL. 33172
TEL. (305) 593-6590 FAX. (305) 593-6592

revisions:

no	date	by	description
H	01.16.14		NO CHANGE THIS SHEET
I	06.09.14		GENERAL REVISION
J	11.12.14		REV. PER RER COMMENTS
K	02.03.15		REV. PER RER COMMENTS

date: 05-20-10
scale: -
dr. by:
chk. by:

drawing no.
W10-31

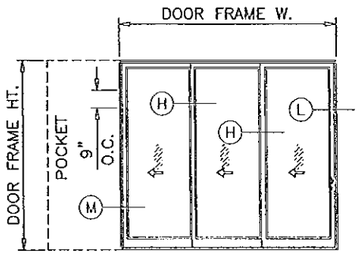

PXXX(SHOWN)
XXXP

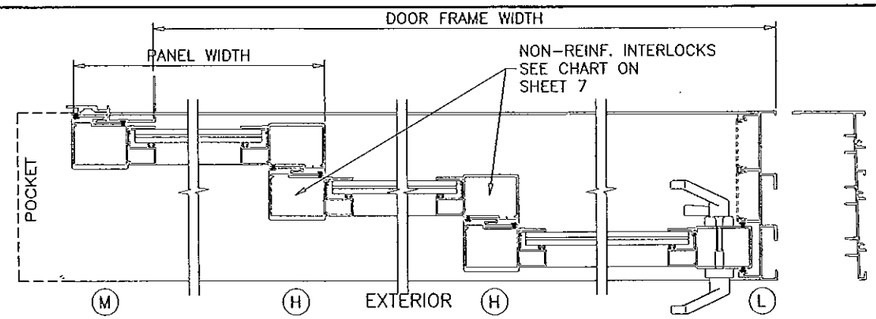

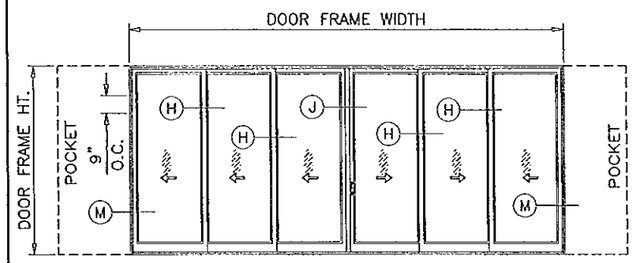

PXXXXXXP (SHOWN)

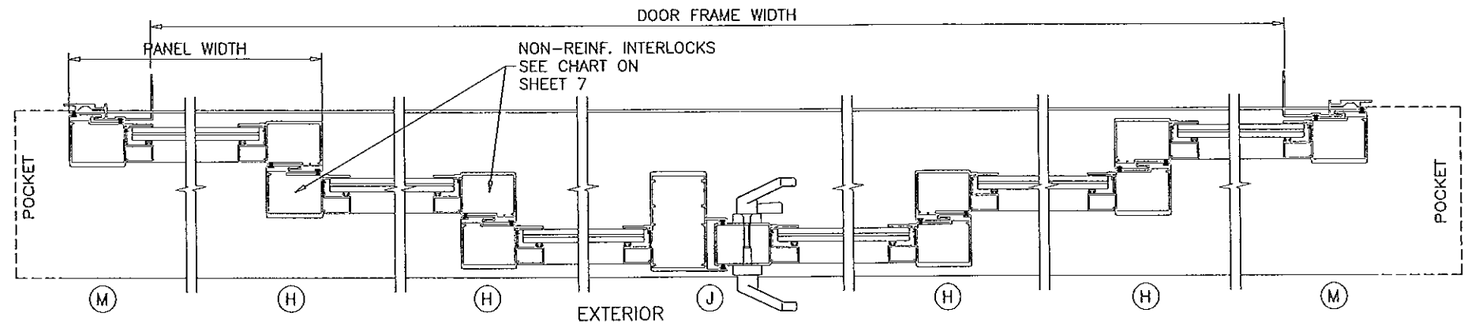

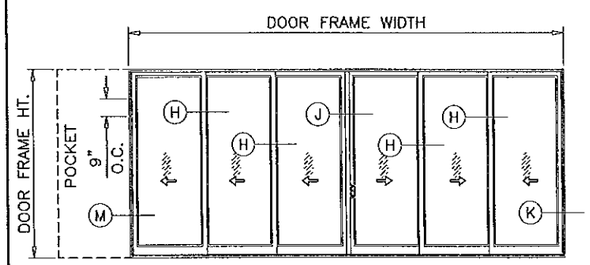

PXXXXXX(SHOWN)
XXXXXXP

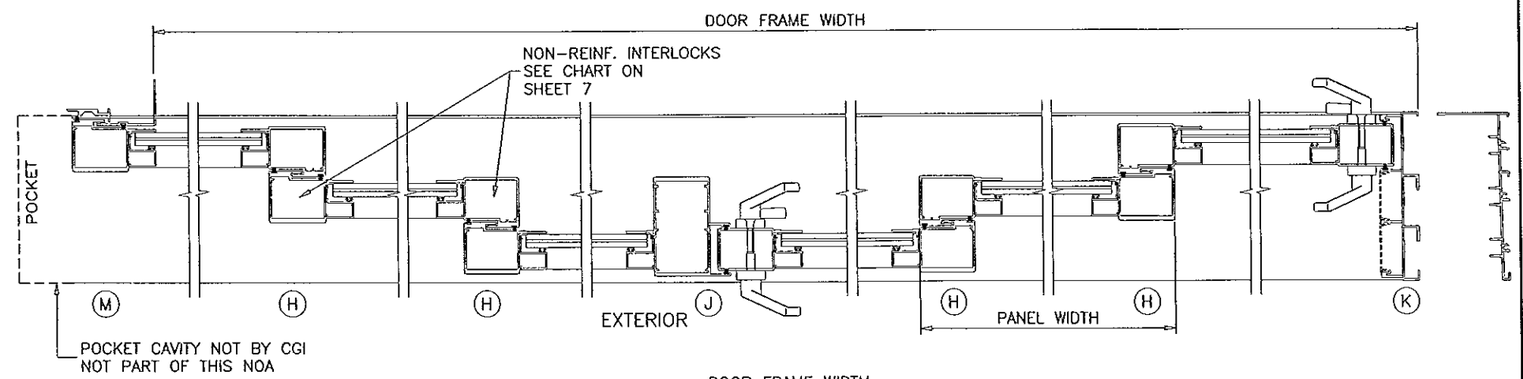

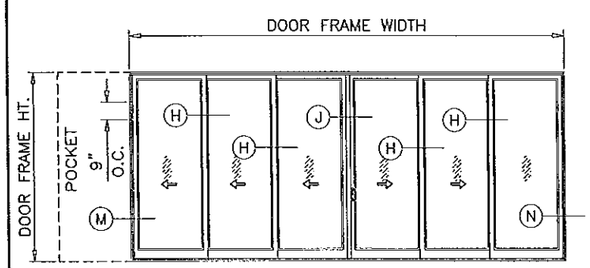

PXXXXXO(SHOWN)
OXXXXXP

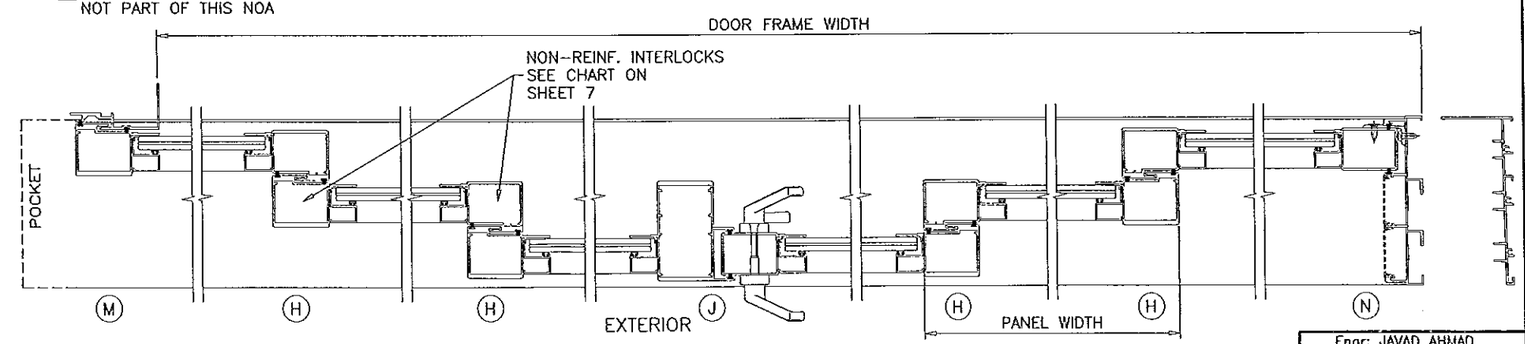

APPROVED CONFIGURATIONS

POCKETED DOORS (NON-REINFORCED SHOWN)
SEE SHEET 7 FOR Dp AND REINFORCING OPTIONS

THREE (3) TRACKS

POCKETS ARE NOT PART OF THIS APPROVAL
AND TO BE REVIEWED BY AHJ.

PRODUCT REVISED
as complying with the Florida
Building Code
Acceptance No. 14-0627.15
Expiration Date 9/22/20
By Ishaq I. Ahmed
Miami Dade Product Control

NOTE:
1. CONFIGURATIONS SHOWN FOR ILLUSTRATION PURPOSES ONLY.
2. FOR APPLICABLE NON REINFORCED OR REINFORCED DESIGN PRESSURES SEE SHEET 7.
3. FOR ANCHOR DETAILS SEE SHEETS 8 THRU 13.
4. DOOR SHALL MEET EGRESS REQUIREMENTS AS APPLICABLE PER FBC.

Engr: JAVAD AHMAD
CIVIL
FLA. PE # 70592
C.A.N. 3538

FEB 2 5 2015

AL-FAROOQ CORPORATION
ENGINEERS & PRODUCT DEVELOPMENT
1235 S.W. 87 AVE
MIAMI, FLORIDA 33174
TEL. (305) 264-8100 FAX. (305) 262-6978
COMP-ANL\W10-31CGI

SERIES SENTINEL 150 ALUM. SLIDING GLASS DOOR (L.M.I.)

CGI WINDOWS & DOORS
10100 N.W. 25TH STREET
MIAMI, FL. 33172
TEL. (305) 593-6590 FAX. (305) 593-6592

revisions:

no	date	by	description
H	01.16.14		NO CHANGE THIS SHEET
I	06.09.14		GENERAL REVISION
J	11.12.14	RER	REV. PER RER COMMENTS
K	02.03.15	RER	REV. PER RER COMMENTS

date: 05-20-10
scale: –
dr. by: HAMID
chk. by:

drawing no.
W10-31

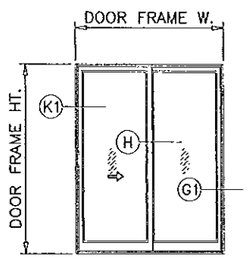

XO (SHOWN)
OX

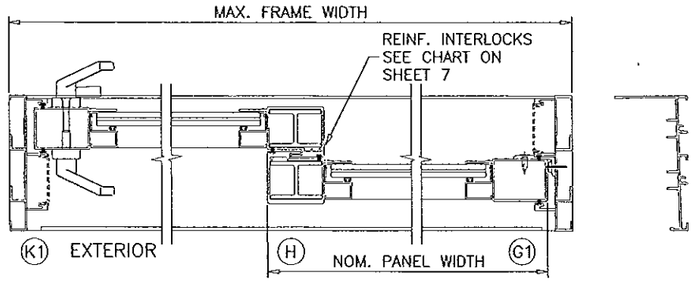

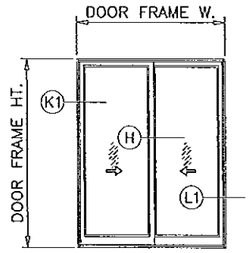

XX

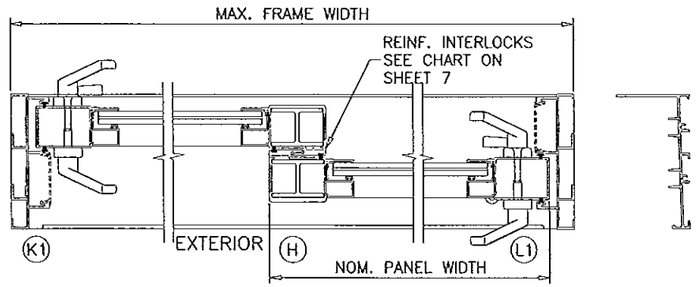

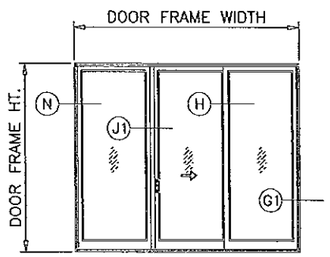

OXO (SHOWN)
OXO (REVERSE)

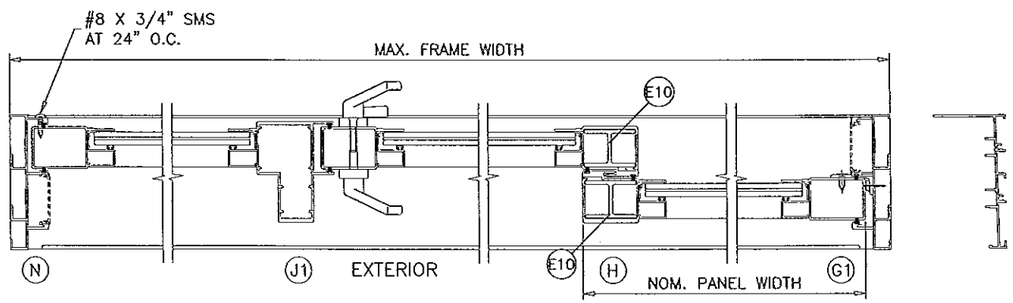

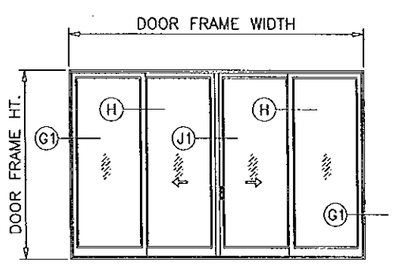

OXXO
XXXX (SIMILAR)

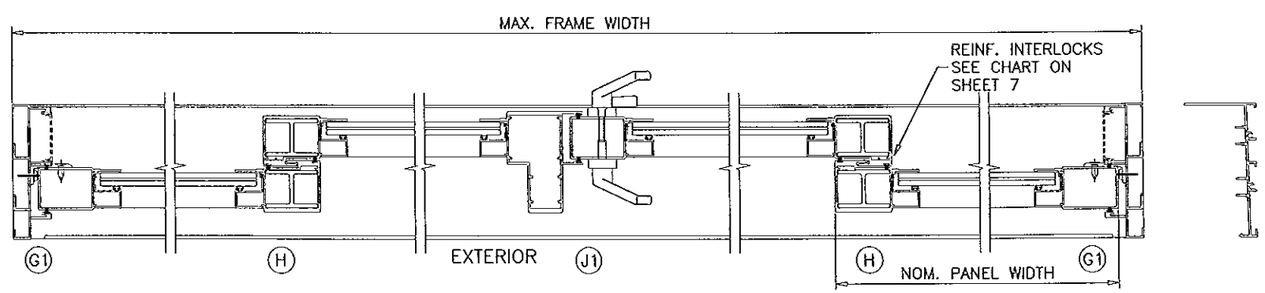

PRODUCT REVISED
as complying with the Florida Building Code
Acceptance No 14-0627.15
Expiration Date 4/27/20
By Ichung T. Chan
Miami Dade Product Control

APPROVED CONFIGURATIONS
NON–POCKETED DOORS (NON–REINFORCED SHOWN)
SEE SHEET 7 FOR Dp AND REINFORCING OPTIONS

TWO (2) TRACKS

NOTE:
1. CONFIGURATIONS SHOWN FOR ILLUSTRATION PURPOSES ONLY.
2. FOR APPLICABLE NON REINFORCED OR REINFORCED DESIGN PRESSURES SEE SHEET 7.
3. FOR ANCHOR DETAILS SEE SHEETS 8 THRU 13.
4. DOOR SHALL MEET EGRESS REQUIREMENTS AS APPLICABLE PER FBC.

Engr: JAVAD AHMAD
CML
FLA. PE # 70592
C.A.N. 3538

FEB 2 5 2015

AL-FAROOQ CORPORATION
ENGINEERS & PRODUCT DEVELOPMENT
1235 S.W. 87 AVE
MIAMI, FLORIDA 33174
TEL. (305) 264-8100 FAX. (305) 262-6978

COMP–ANL\W10–31CGI

SERIES SENTINEL 150 ALUM. SLIDING GLASS DOOR (L.M.I.)

CGI WINDOWS & DOORS
10100 N.W. 25TH STREET
MIAMI, FL. 33172
TEL. (305) 593–6590 FAX. (305) 593–6592

revisions:

no	date	by	description
H	01.16.14		NO CHANGE THIS SHEET
I	06.09.14		GENERAL REVISION
J	11.12.14		REV. PER RER COMMENTS
K	02.03.15		REV. PER RER COMMENTS

date: 05–20–10
scale: –
dr. by:
chk. by:

drawing no.
W10–31

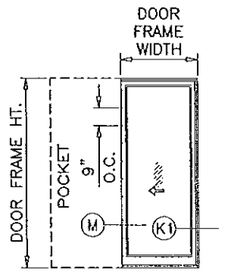

PX (SHOWN)
XP

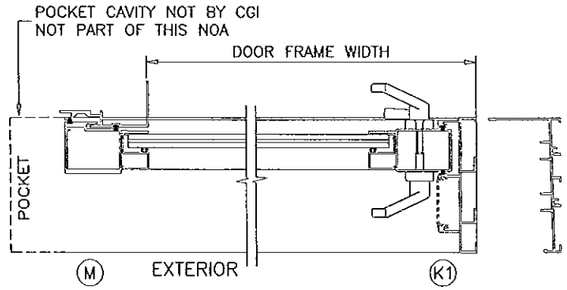

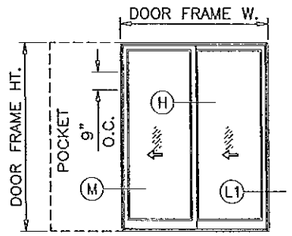

PXX (SHOWN)
XXP

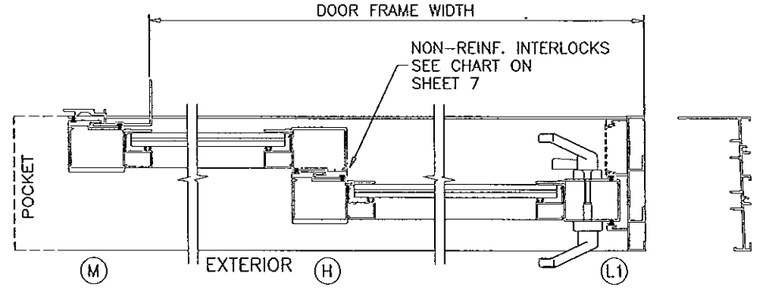

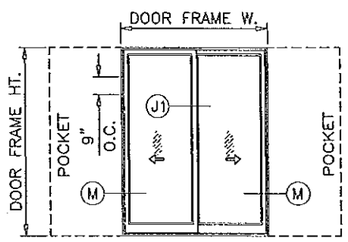

PXXP

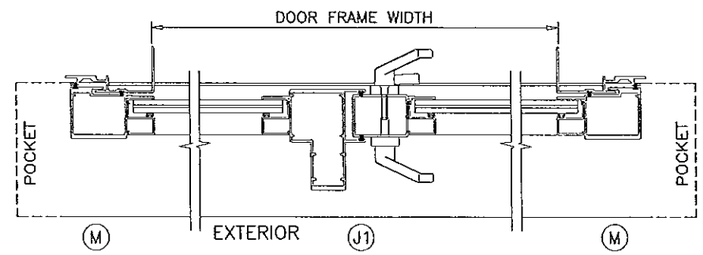

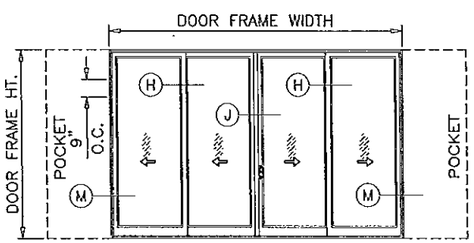

PXXXXP

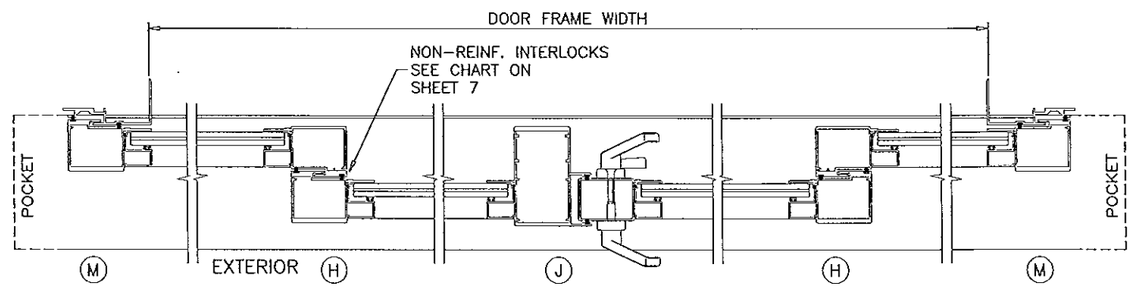

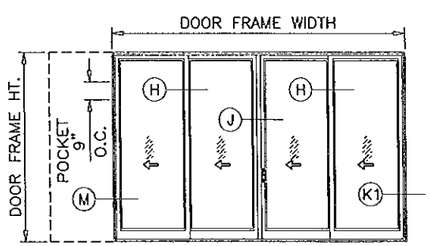

PXXXX (SHOWN)
PXXXO
XXXXP
OXXXP

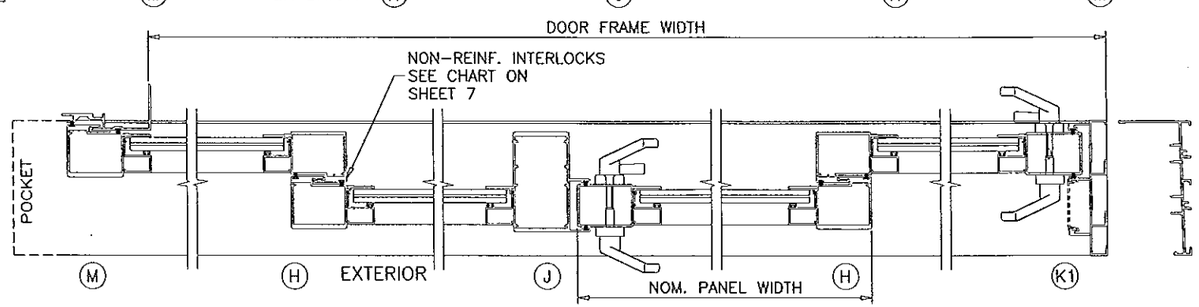

APPROVED CONFIGURATIONS
POCKETED DOORS (NON-REINFORCED SHOWN)
SEE SHEET 7 FOR Dp AND REINFORCING OPTIONS

TWO (2) TRACKS

NOTE:

1. CONFIGURATIONS SHOWN FOR ILLUSTRATION PURPOSES ONLY.
2. FOR APPLICABLE NON REINFORCED OR REINFORCED DESIGN PRESSURES SEE SHEET 7.
3. FOR ANCHOR DETAILS SEE SHEETS 8 THRU 13.
4. DOOR SHALL MEET EGRESS REQUIREMENTS AS APPLICABLE PER FBC.

PRODUCT REVISED
as complying with the Florida
Building Code
Acceptance No. 14-0627.15
Expiration Date 9/22/20
By Ishaq I. Chang
Miami Dade Product Control

POCKETS ARE NOT PART OF THIS APPROVAL
AND TO BE REVIEWED BY AHJ.

Engr: JAVAD AHMAD
CIVIL
FLA. PE # 70592
C.A.N. 3538

FEB 25 2015

AL-FAROOQ CORPORATION
ENGINEERS & PRODUCT DEVELOPMENT
1235 S.W. 87 AVE
MIAMI, FLORIDA 33174
TEL. (305) 264-8100 FAX. (305) 262-6978

COMP-ANL\W10-31CGI

SERIES SENTINEL 150 ALUM SLIDING GLASS DOOR (L.M.I.)

CGI WINDOWS & DOORS
10100 N.W. 25TH STREET
MIAMI, FL. 33172
TEL. (305) 593-6590 FAX. (305) 593-6592

revisions:

no	date	by	description
H	01.16.14		NO CHANGE THIS SHEET
I	06.09.14		GENERAL REVISION
J	11.12.14		REV. PER RER COMMENTS
K	02.03.15		REV. PER RER COMMENTS

date: 05-20-10
scale: -
dr. by:
chk. by:

drawing no.
W10-31

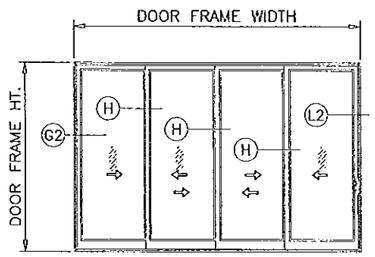

XXXX (SHOWN)
OXXX
XXXO
XXXX (REVERSE)

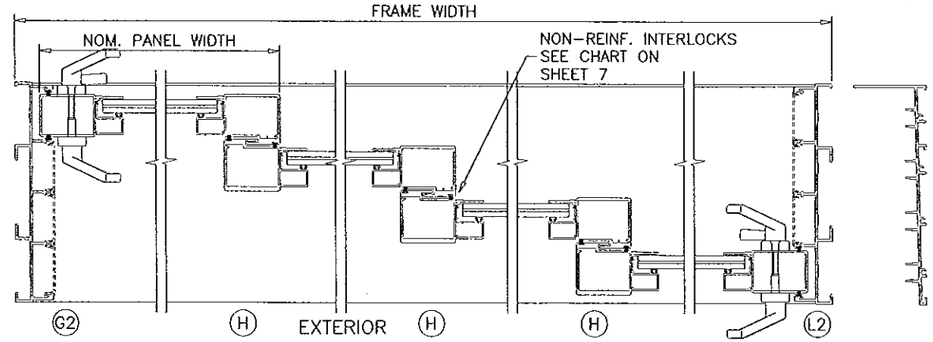

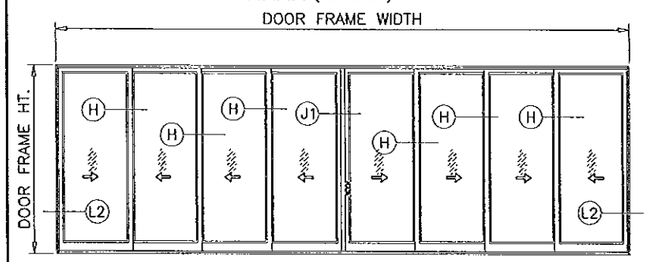

XXXXXXXX (SHOWN)
OXXXXXXO

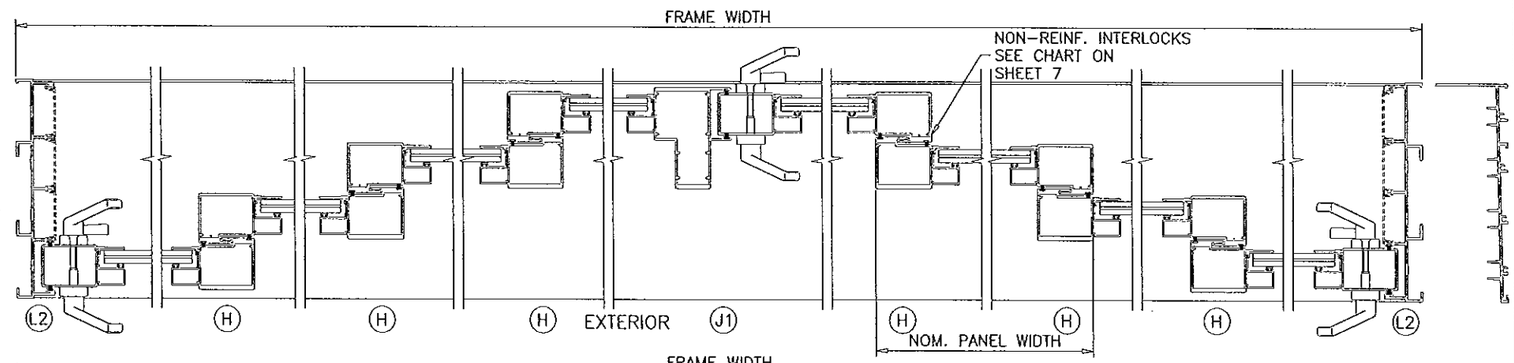

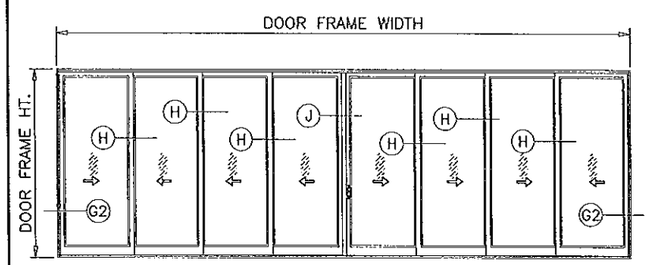

XXXXXXXX (SHOWN)
OXXXXXXO

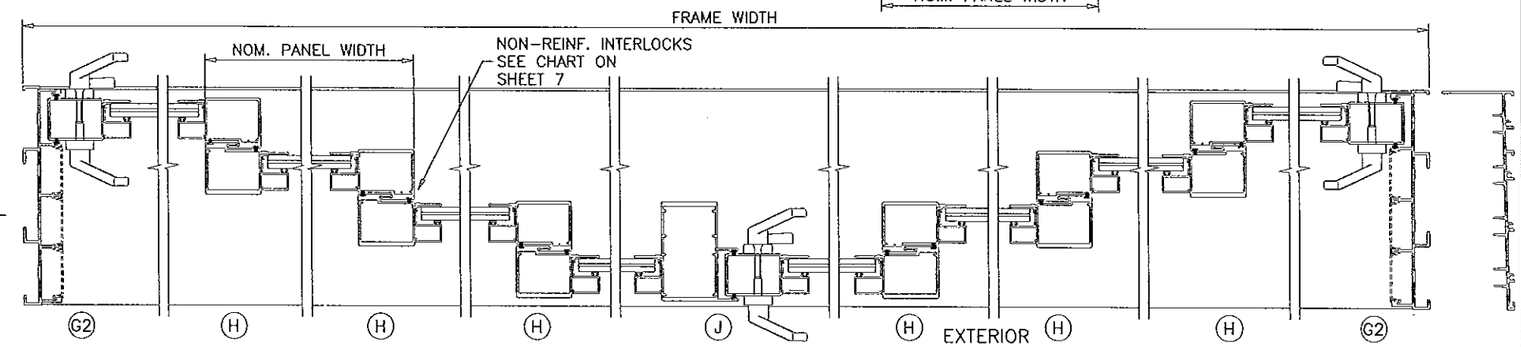

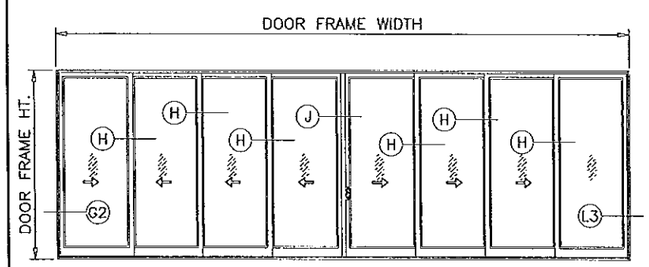

XXXXXXXO (SHOWN)
OXXXXXXO

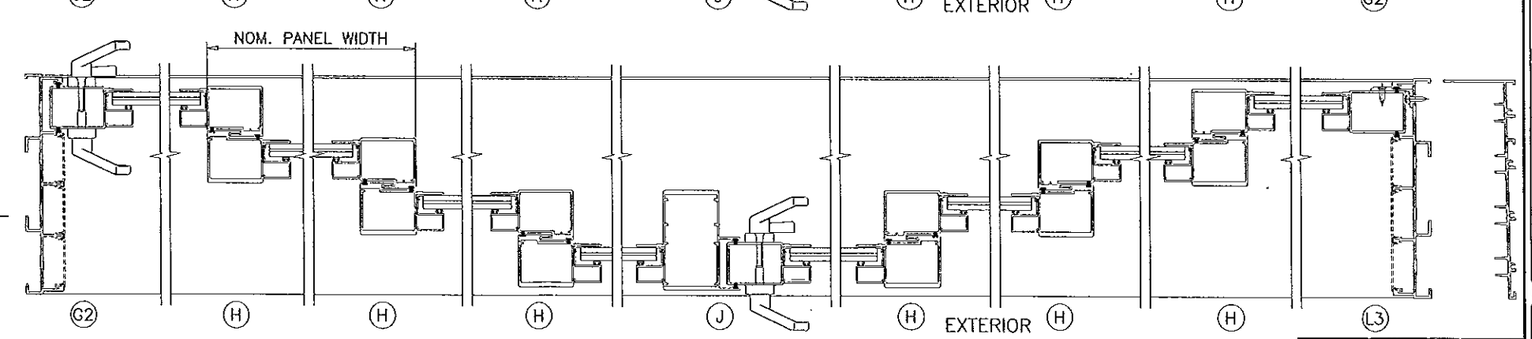

APPROVED CONFIGURATIONS
NON-POCKETED DOORS (NON-REINFORCED SHOWN)
SEE SHEET 7 FOR Dp AND REINFORCING OPTIONS

FOUR (4) TRACKS

PRODUCT REVISED
as complying with the Florida
Building Code
Acceptance No. 14-0627.15
Expiration Date 5/22/20
By Cheryl Chase
Miami-Dade Product Control

NOTE:
1. CONFIGURATIONS SHOWN FOR ILLUSTRATION PURPOSES ONLY.
2. FOR APPLICABLE NON REINFORCED OR REINFORCED DESIGN PRESSURES SEE SHEET 7.
3. FOR ANCHOR DETAILS SEE SHEETS 8 THRU 13.
4. DOOR SHALL MEET EGRESS REQUIREMENTS AS APPLICABLE PER FBC.

Engr: JAVAD AHMAD
CIVIL
FLA. PE # 70592
C.A.N. 3538

FEB 25 2015

AL-FAROOQ CORPORATION
ENGINEERS & PRODUCT DEVELOPMENT
1235 S.W. 87 AVE
MIAMI, FLORIDA 33174
TEL. (305) 264-8100 FAX. (305) 262-6978

COMP-ANL\W10-31CGI

SERIES SENTINEL 150 ALUM SLIDING GLASS DOOR (LM.I.)

CGI WINDOWS & DOORS
10100 N.W. 25TH STREET
MIAMI, FL. 33172
TEL. (305) 593-6590 FAX. (305) 593-6592

revisions:

no	date	by	description
H	01.16.14		NO CHANGE THIS SHEET
I	06.09.14		GENERAL REVISION
J	11.12.14		REV. PER RER COMMENTS
K	02.03.15		REV. PER RER COMMENTS

date: 05-20-10
scale: -
dr. by:
chk. by:

drawing no.
W10-31

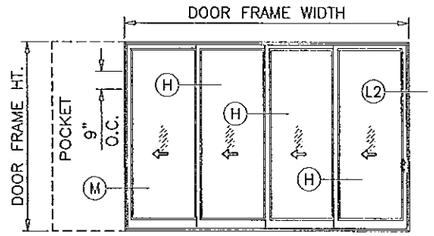

PXXXX (SHOWN)
XXXXP

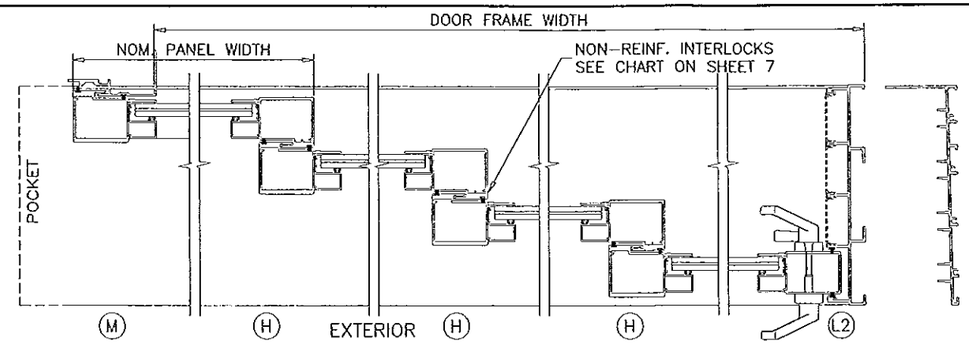

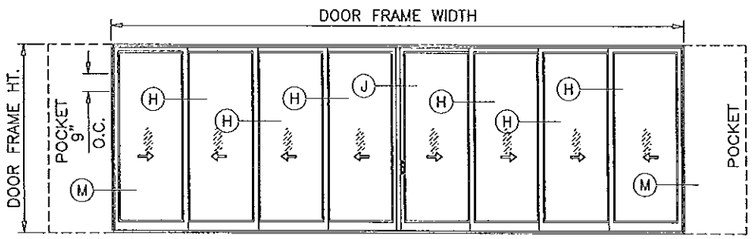

PXXXXXXXXP (SHOWN)

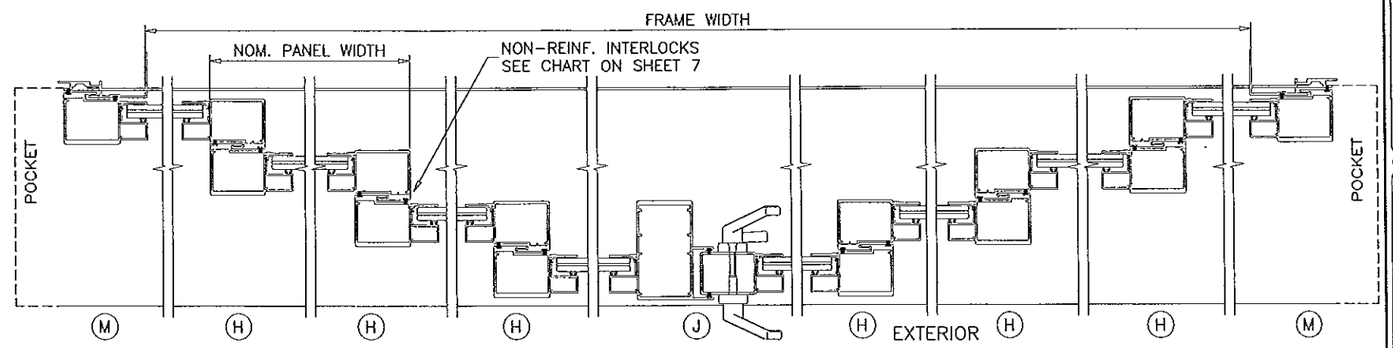

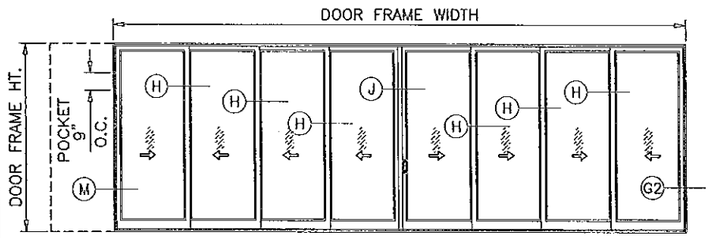

PXXXXXXXX (SHOWN)
XXXXXXXXP
OXXXXXXXP

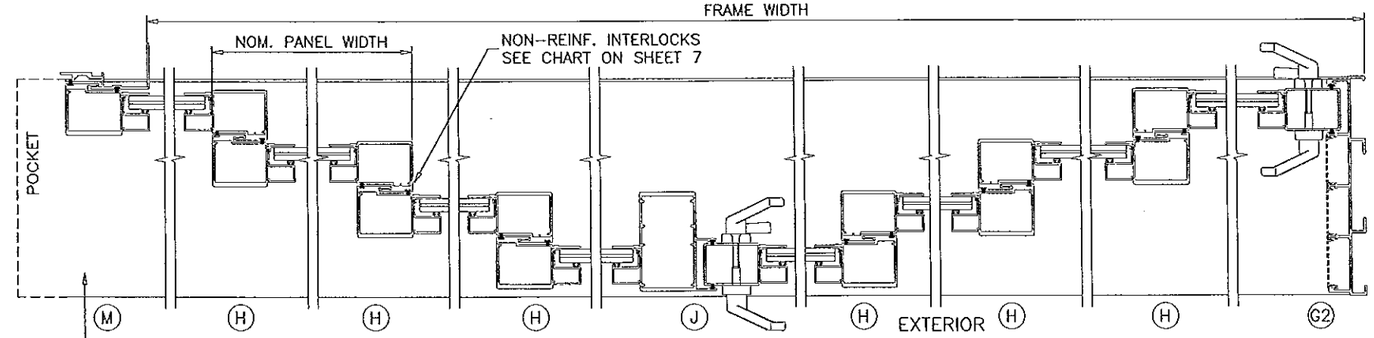

POCKET CAVITY NOT BY CGI
NOT PART OF THIS NOA

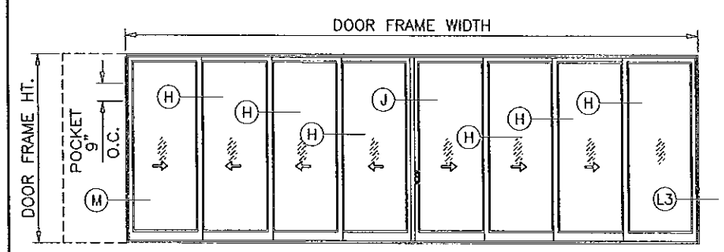

PXXXXXXXO (SHOWN)

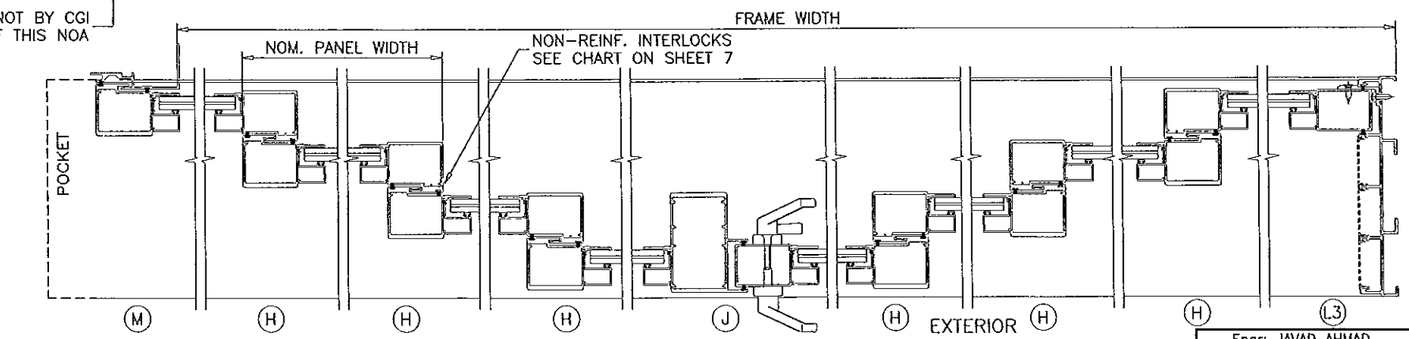

APPROVED CONFIGURATIONS
POCKETED DOORS (NON-REINFORCED SHOWN)
SEE SHEET 7 FOR Dp AND REINFORCING OPTIONS

FOUR (4) TRACKS

POCKETS ARE NOT PART OF THIS APPROVAL
AND TO BE REVIEWED BY AHJ.

PRODUCT REVISED
as complying with the Florida
Building Code
Acceptance No 14-0627.15
Expiration Date 9/22/20
By Ishaq Chand
Miami Dade Product Control

NOTE:
1. CONFIGURATIONS SHOWN FOR ILLUSTRATION PURPOSES ONLY.
2. FOR APPLICABLE NON REINFORCED OR REINFORCED DESIGN PRESSURES SEE SHEET 7.
3. FOR ANCHOR DETAILS SEE SHEETS 8 THRU 13.
4. DOOR SHALL MEET EGRESS REQUIREMENTS AS APPLICABLE PER FBC.

Engr: JAVAD AHMAD
CIVIL
FLA. PE # 70592
C.A.N. 3538
FEB 25 2015

AL-FAROOQ CORPORATION
ENGINEERS & PRODUCT DEVELOPMENT
1235 S.W. 87 AVE
MIAMI, FLORIDA 33174
TEL. (305) 264-8100 FAX. (305) 262-6978
COMP-ANL\W10-31CGI

SERIES SENTINEL 150 ALUM SLIDING GLASS DOOR (L.M.I.)

CGI WINDOWS & DOORS
10100 N.W. 25TH STREET
MIAMI, FL. 33172
TEL. (305) 593-6590 FAX. (305) 593-6592

revisions:

no	date	by	description
H	01.16.14		NO CHANGE THIS SHEET
I	06.09.14		GENERAL REVISION
J	11.12.14		REV. PER RER COMMENTS
K	02.03.15		REV. PER RER COMMENTS

date: 05-20-10
scale: –
dr. by: HAMID
chk. by:

drawing no.
W10-31

GLASS CAPACITY CHARTS

DESIGN LOAD CAPACITY – PSF (GLASS)						
NOM. PANEL WIDTH INCHES	DOOR FRAME HEIGHT INCHES	NUMBER OF PANELS ALLOWED	GLASS TYPES 'A' & 'A1' INTERLOCKS W/O REINF.		GLASS TYPES 'B' & 'B1' INTERLOCKS WITH REINF.	
			EXT.(+)	INT.(–)	EXT.(+)	INT.(–)
24–1/8	80	10	60.0	60.0	80.0	80.0
30–1/8		10	60.0	60.0	80.0	80.0
36–1/8		10	60.0	60.0	80.0	80.0
42–1/8		10	60.0	60.0	80.0	80.0
48–1/8		10	60.0	60.0	80.0	80.0
54–1/8		9	53.4	53.4	71.1	71.1
24–1/8	84	10	60.0	60.0	80.0	80.0
30–1/8		10	60.0	60.0	80.0	80.0
36–1/8		10	60.0	60.0	80.0	80.0
42–1/8		10	60.0	60.0	80.0	80.0
48–1/8		10	60.0	60.0	80.0	80.0
54–1/8		9	53.4	53.4	71.1	71.1
24–1/8	90	10	60.0	60.0	80.0	80.0
30–1/8		10	60.0	60.0	80.0	80.0
36–1/8		10	60.0	60.0	80.0	80.0
42–1/8		10	60.0	60.0	80.0	80.0
48–1/8		9	60.0	60.0	80.0	80.0
24–1/8	96	10	60.0	60.0	80.0	80.0
30–1/8		10	60.0	60.0	80.0	80.0
36–1/8		10	60.0	60.0	80.0	80.0
42–1/8		10	60.0	60.0	80.0	80.0
48–1/8		9	60.0	60.0	80.0	80.0

			GLASS TYPES 'A', 'B', 'A1', 'B1' INTERLOCKS WITH REINF.	
			EXT.(+)	INT.(–)
24–1/8	102	10	–	–	60.0	60.0
30–1/8		10	–	–	60.0	60.0
36–1/8		10	–	–	60.0	60.0
42–1/8		10	–	–	60.0	60.0
48–1/8		10	–	–	60.0	60.0
54–1/8		9	–	–	53.4	53.4
24–1/8	108	10	–	–	60.0	60.0
30–1/8		10	–	–	60.0	60.0
36–1/8		10	–	–	60.0	60.0
42–1/8		10	–	–	60.0	60.0
48–1/8		10	–	–	60.0	60.0
53–1/8		9	–	–	53.4	53.4
24–1/8	114	10	–	–	60.0	60.0
30–1/8		10	–	–	60.0	60.0
36–1/8		10	–	–	60.0	60.0
42–1/8		10	–	–	60.0	60.0
48–1/8		9	–	–	60.0	60.0
24–1/8	120	10	–	–	60.0	60.0
30–1/8		10	–	–	60.0	60.0
36–1/8		10	–	–	60.0	60.0
42–1/8		10	–	–	60.0	60.0
48–1/8		9	–	–	60.0	60.0

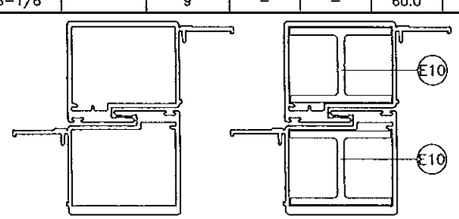

INTERLOCKS W/O REINF. — INTERLOCKS WITH REINF.

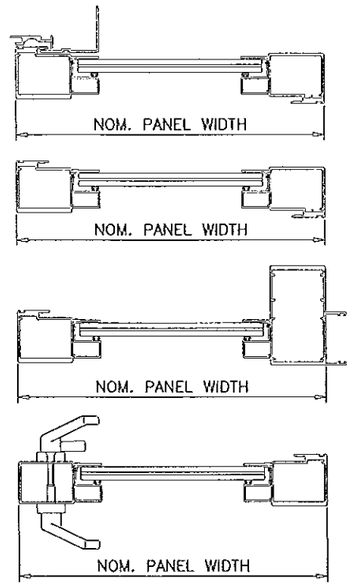

APPLICABLE FBC EGRESS REQUIREMENTS TO BE REVIEWED BY AHJ.

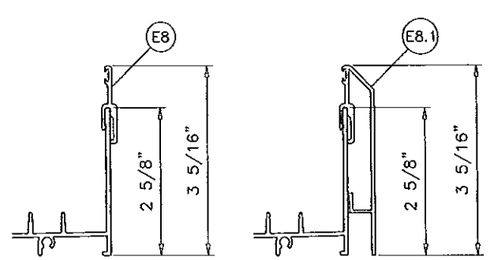

SILL RISER ITEMS E8 OR E8.1 ARE REQUIRED FOR LOADS ABOVE +60.0 PSF ONLY.

PRODUCT REVISED
as complying with the Florida Building Code
Acceptance No. 14-0622.15
Expiration Date 9/22/20
By Shaq L. Chang
Miami Dade Product Control

NOTE:
GLASS CAPACITIES ON THIS SHEET ARE BASED ON ASTM E1300–09 (3 SEC. GUSTS) AND FLORIDA BUILDING COMMISSION DECLARATORY STATEMENT DCA05–DEC–219

Engr: JAVAD AHMAD
CIVIL
FLA. PE # 70592
C.A.N. 3538
FEB 25 2015

AL-FAROOQ CORPORATION
ENGINEERS & PRODUCT DEVELOPMENT
1235 S.W. 87 AVE
MIAMI, FLORIDA 33174
TEL (305) 264-8100 FAX. (305) 262-6978
COMP–ANL\W10–31CGI

SERIES SENTINEL 150 ALUM SLIDING GLASS DOOR (L.M.I.)

CGI WINDOWS & DOORS
10100 N.W. 25TH STREET
MIAMI, FL. 33172
TEL. (305) 593–6590 FAX. (305) 593–6592

revisions:

no	date	by	description
H	01.16.14		REV. PER RER COMMENTS
I	06.09.14		GENERAL REVISION
J	11.12.14		REV. PER RER COMMENTS
K	02.03.15		REV. PER RER COMMENTS

date: 05–20–10
scale: 3/8" = 1"
dr. by:
chk. by:

drawing no.
W10–31

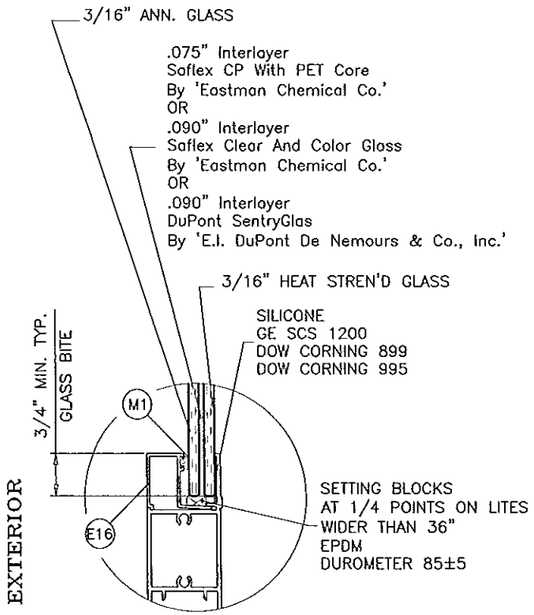

GLASS TYPE 'A'

7/16" OVERALL LAM. GLASS

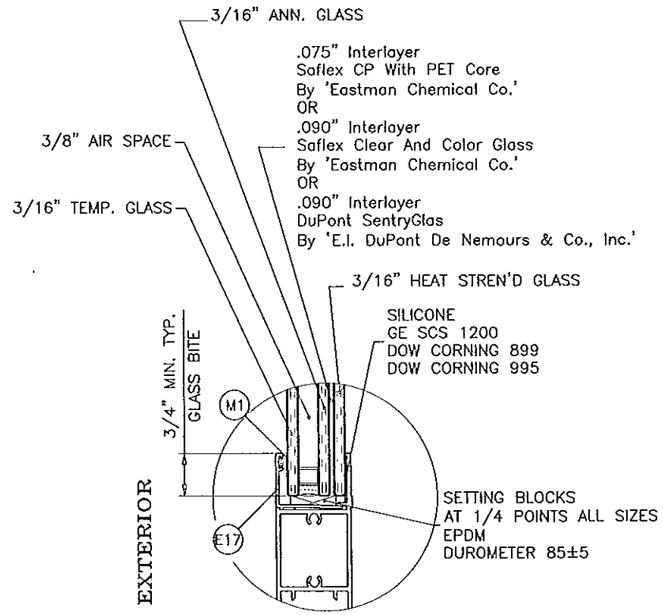

GLASS TYPE 'A1'

1" OVERALL INSUL. LAM. GLASS

AIR SPACE CONSISTING OF:

3/8" SPACER:

.0045" THK. ST. STEEL RECTANGULAR SPACER AROUND THE PERIMETER OF THE GLASS.

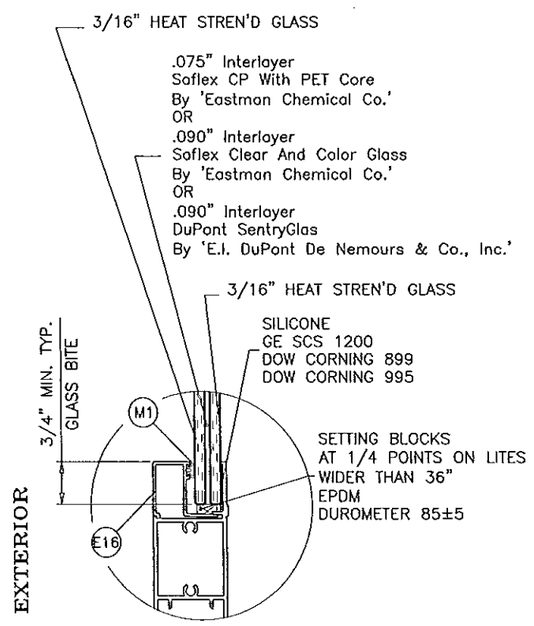

GLASS TYPE 'B'

7/16" OVERALL LAM. GLASS

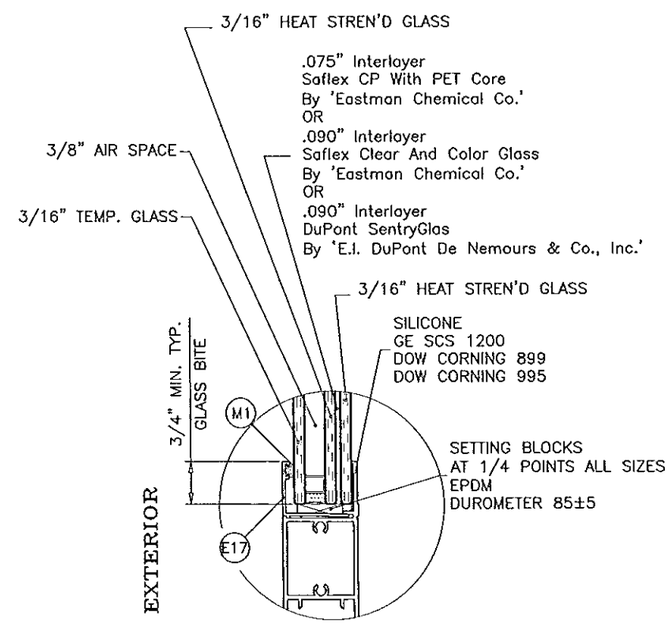

GLASS TYPE 'B1'

1" OVERALL INSUL. LAM. GLASS

GLAZING OPTIONS

PRODUCT REVISED
as complying with the Florida
Building Code
Acceptance No. 14-0627.15
Expiration Date 9/22/20
By Ishwar Chandra
Miami Dade Product Control

Engr: JAVAD AHMAD
CIVIL
FLA. PE # 70592
C.A.N. 3538

FEB 25 2015

AL-FAROOQ CORPORATION
ENGINEERS & PRODUCT DEVELOPMENT
1235 S.W. 87 AVE
MIAMI, FLORIDA 33174
TEL. (305) 264-8100 FAX. (305) 262-6978
COMP-ANL\W10-31CGI

SERIES SENTINEL 150 ALUM SLIDING GLASS DOOR (L.M.I.)

CGI WINDOWS & DOORS
10100 N.W. 25TH STREET
MIAMI, FL. 33172
TEL. (305) 593-6590 FAX. (305) 593-6592

revisions:

no	date	by	description
I	06.09.14		GENERAL REVISION
J	11.12.14		REV. PER RER COMMENTS
K	02.03.15		NO CHANGE THIS SHEET

date: 05-20-10
scale: 3/8" = 1"
dr. by:
chk. by:

drawing no.
W10-31

sheet 7.1 of 16

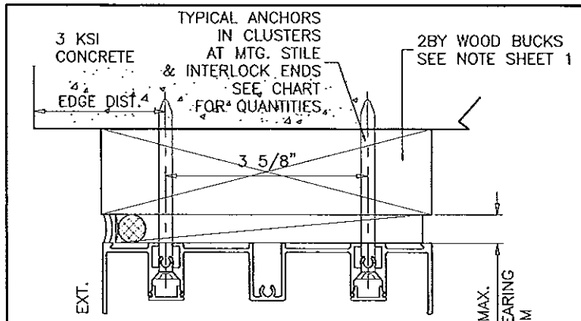

ANCHOR TYPE A
INTO 2BY WOOD BUCKS
OR WOOD STRUCTURES

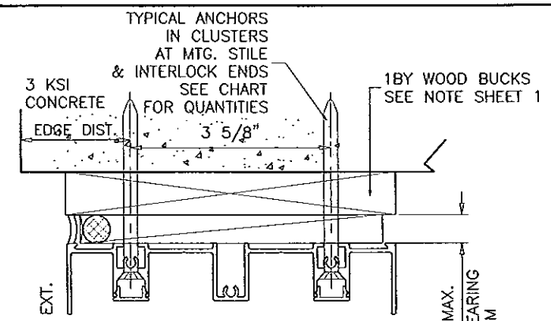

ANCHOR TYPE A
THRU 1BY WOOD BUCKS
INTO 3 KSI CONCRETE

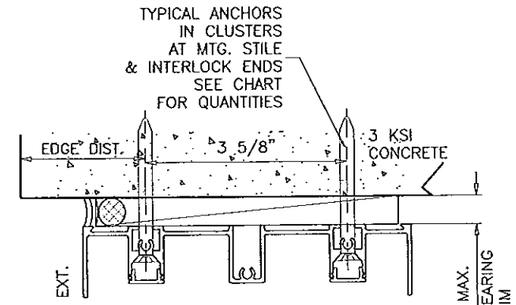

ANCHOR TYPE B
DIRECTLY INTO 3 KSI CONCRETE

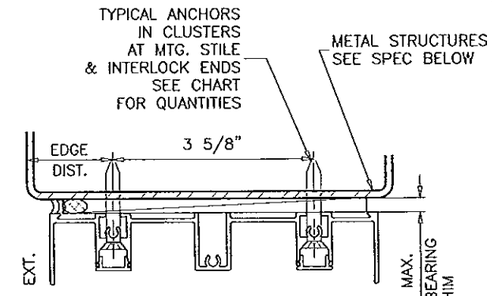

ANCHOR TYPE C
INTO METAL STRUCTURES
OR APPROVED MULLIONS

WOOD BUCKS AND METAL STRUCTURES NOT BY CGI WINDOWS MUST SUSTAIN LOADS IMPOSED BY GLAZING SYSTEM AND TRANSFER THEM TO THE BUILDING STRUCTURE.

INSTALLATION CONDITIONS SHOWN APPLY TO BOTH 2 TRACK AND 3 TRACK SYSTEMS WITH STD. OR ALTERNATE FRAME HEAD AND SILL.

DESIGN LOAD CAPACITY – PSF (ANCHORS)

NOM. PANEL WIDTH INCHES	DOOR FRAME HEIGHT INCHES	HEAD ANCHORS 1/2" SHIM SPACE CLUSTER AT STILE/INTERLOCK ENDS 4 (6) EXT.(+) INT.(–)	HEAD ANCHORS 1/2" SHIM SPACE CLUSTER AT STILE/INTERLOCK ENDS 6 (8) EXT.(+) INT.(–)	HEAD ANCHORS 1/2" SHIM SPACE CLUSTER AT STILE/INTERLOCK ENDS 8 (10) EXT.(+) INT.(–)	HEAD ANCHORS 3/8" SHIM CLUSTER AT STILE/INTERLOCK ENDS 4 (6) EXT.(+) INT.(–)	HEAD ANCHORS 3/8" SHIM CLUSTER AT STILE/INTERLOCK ENDS 6 (8) EXT.(+) INT.(–)	SILL ANCHORS (TYPE B2) CLUSTER AT STILE/INTERLOCK ENDS 4 (6) EXT.(+) INT.(–)	SILL ANCHORS (TYPE B2) CLUSTER AT STILE/INTERLOCK ENDS 6 (8) EXT.(+) INT.(–)
24–1/8	82	80.0	–	–	80.0	–	80.0	–
30–1/8		80.0	–	–	80.0	–	80.0	–
36–1/8		73.6	80.0	–	80.0	–	72.4	80.0
42–1/8		66.4	80.0	–	76.7	80.0	65.3	80.0
48–1/8		61.2	80.0	–	70.8	80.0	60.2	80.0
54–1/8		57.5	80.0	–	66.5	80.0	56.5	80.0
24–1/8	84	80.0	80.0	–	80.0	–	80.0	–
30–1/8		79.3	80.0	–	80.0	–	78.0	80.0
36–1/8		69.2	80.0	–	80.0	–	68.0	80.0
42–1/8		62.1	80.0	–	71.8	80.0	61.1	80.0
48–1/8		57.1	80.0	–	66.0	80.0	56.2	80.0
54–1/8		53.5	80.0	–	61.8	80.0	52.6	80.0
24–1/8	90	80.0	–	–	80.0	–	80.0	–
30–1/8		73.0	80.0	–	80.0	–	71.8	80.0
36–1/8		63.4	80.0	–	73.3	80.0	62.3	80.0
42–1/8		56.7	80.0	–	65.6	80.0	55.8	80.0
48–1/8		51.9	77.9	80.0	60.0	80.0	51.1	80.0
24–1/8	96	80.0	–	–	80.0	–	80.0	–
30–1/8		67.6	80.0	–	78.1	80.0	66.5	80.0
36–1/8		58.5	80.0	–	67.7	80.0	57.5	80.0
42–1/8		52.2	78.3	80.0	60.3	80.0	51.3	80.0
48–1/8		47.6	71.4	80.0	55.0	80.0	46.8	80.0
24–1/8	102	60.0	–	–	60.0	–	60.0	–
30–1/8		60.0	–	–	60.0	–	60.0	–
36–1/8		54.3	60.0	–	60.0	–	53.4	60.0
42–1/8		48.3	60.0	–	55.9	60.0	47.5	60.0
48–1/8		43.9	60.0	–	50.8	60.0	43.2	60.0
54–1/8		40.6	60.0	–	47.0	60.0	39.9	60.0
24–1/8	108	60.0	–	–	60.0	–	60.0	–
30–1/8		58.8	60.0	–	60.0	–	57.9	60.0
36–1/8		50.7	60.0	–	58.6	60.0	49.9	60.0
42–1/8		45.0	60.0	–	52.0	60.0	44.2	60.0
48–1/8		40.8	60.0	–	47.2	60.0	40.1	60.0
24–1/8	114	60.0	–	–	60.0	–	60.0	–
30–1/8		55.3	60.0	–	60.0	–	54.4	60.0
36–1/8		47.5	60.0	–	55.0	60.0	46.8	60.0
42–1/8		42.1	60.0	–	48.7	60.0	41.4	60.0
48–1/8		38.1	57.1	60.0	44.0	60.0	37.4	60.0
24–1/8	120	60.0	–	–	60.0	–	60.0	–
30–1/8		52.1	60.0	–	60.0	–	51.3	60.0
36–1/8		44.7	60.0	–	51.7	60.0	44.0	60.0
42–1/8		39.5	59.3	60.0	45.7	60.0	38.9	60.0
48–1/8		35.7	53.5	60.0	41.3	60.0	35.1	60.0

LIMIT EXT.(+) LOADS TO 60.0 PSF FOR DOORS W/O REINFORCING ALL SIZES
LIMIT EXT.(+) LOADS TO 80.0 PSF FOR DOORS W/ REINF. UPTO 96 IN. HT.
LIMIT EXT.(+) LOADS TO 60.0 PSF FOR DOORS W/ REINF. ABOVE 96 IN. HT. UPTO 120 IN. HIGH.

INTERPOLATION BETWEEN WIDTHS AND HEIGHTS ACCEPTABLE

NUMBER IN PARENTHESIS INDICATE CLUSTER OF ANCHORS AT STILE/INTERLOCK ENDS FOR FOUR TRACK FRAME HEAD ONLY.

TYPICAL ANCHORS: SEE ELEV. FOR SPACING

AT HEAD

TYPE 'A'– 1/4" X 3–1/4" ULTRACON BY 'ELCO' (Fu=177 KSI, Fy=155 KSI)
THRU 1BY BUCKS INTO CONCRETE
1–1/4" MIN. EMBED INTO CONCRETE

THRU 2BY BUCKS INTO CONCRETE
1/2" MIN. EMBED INTO CONCRETE

TYPE 'B'– 1/4" X 3–1/4" ULTRACON BY 'ELCO' (Fu=177 KSI, Fy=155 KSI)
DIRECTLY INTO CONCRETE
2" MIN. EMBED

TYPE 'C'– 1/4" DIA. SELF DRILLING SCREWS (GRADE 5 CRS)
INTO MIAMI–DADE COUNTY APPROVED MULLIONS (1/8" THK. MIN.)
INTO METAL STRUCTURES
STEEL : 1/8" THK. MIN. (Fy = 36 KSI MIN.)
ALUMINUM : 1/8" THK. MIN. (6063–T5 MIN.)
(STEEL IN CONTACT WITH ALUMINUM TO BE PLATED OR PAINTED)

AT JAMBS

TYPE 'A'– 1/4" DIA. ULTRACON BY 'ELCO' (Fu=177 KSI, Fy=155 KSI)
INTO 2BY WOOD BUCKS OR WOOD STRUCTURES
1–1/2" MIN. PENETRATION INTO WOOD

THRU 1BY BUCKS INTO CONC. OR MASONRY
1–1/4" MIN. EMBED INTO CONC. OR MASONRY

TYPE 'B'– 1/4" DIA. ULTRACON BY 'ELCO' (Fu=177 KSI, Fy=155 KSI)
DIRECTLY INTO CONC. OR MASONRY
1–1/4" MIN. EMBED INTO CONC. OR MASONRY

TYPE 'C'– 1/4" DIA. SELF DRILLING SCREWS (GRADE 5 CRS)
INTO MIAMI–DADE COUNTY APPROVED MULLIONS (1/8" THK. MIN.)
INTO METAL STRUCTURES
STEEL : 1/8" THK. MIN. (Fy = 36 KSI MIN.)
ALUMINUM : 1/8" THK. MIN. (6063–T5 MIN.)
(STEEL IN CONTACT WITH ALUMINUM TO BE PLATED OR PAINTED)

AT SILL

TYPE 'B2'– 1/4" DIA. ULTRACON BY 'ELCO' (Fu=177 KSI, Fy=155 KSI)
DIRECTLY INTO CONCRETE
1–3/4" MIN. EMBED INTO CONCRETE

ANCHOR EDGE DISTANCES
INTO CONCRETE OR MASONRY = 1" MIN.
INTO WOOD STRUCTURE = 1" MIN.
INTO METAL STRUCTURE = 3/4" MIN.

CONCRETE AT HEAD, SILL OR JAMBS f'c = 3000 PSI MIN.
C–90 HOLLOW/FILLED BLOCK AT JAMBS f'm = 2000 PSI MIN.

NOTE:
ANCHOR CAPACITIES LISTED ON THIS SHEET TO BE USED IN CONJUNCTION WITH GLASS CHARTS ON SHEET 7
LOWER APPLICABLE VALUES CONTROL.
3 TRACK SYSTEM SHOWN ALSO APPLICABLE TO 2 AND 4 TRACK FRAMES.
PLEASE SEE FOLLOWING SHEETS FOR DETAILS.

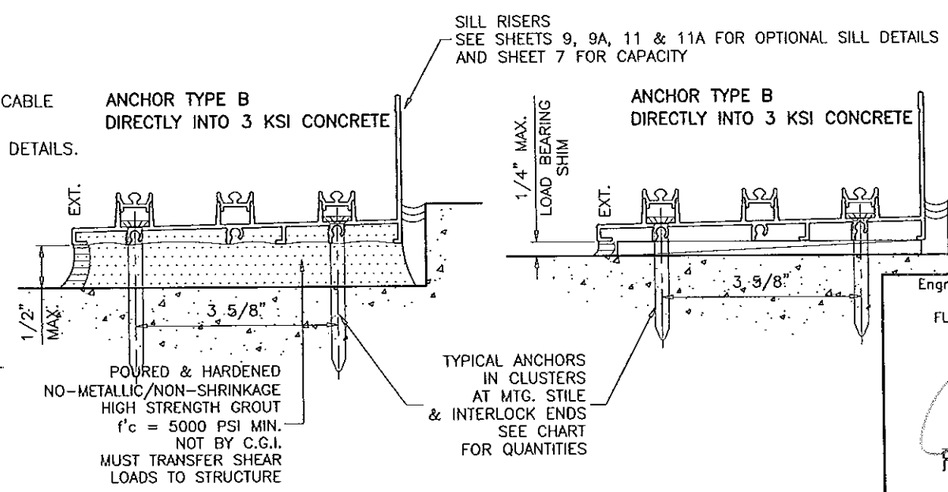

PRODUCT REVISED
in complying with the Florida Building Code
Acceptance No. 14-0627.15
Expiration Date 9/22/20
By Shang Chang
Miami Dade Product Control

Engr: JAVAD AHMAD
CIVIL
FLA. PE # 70592
C.A.N. 3538

FEB 25 2015

AL-FAROOQ CORPORATION
ENGINEERS & PRODUCT DEVELOPMENT
1235 S.W. 87 AVE
MIAMI, FLORIDA 33174
TEL. (305) 264-8100 FAX. (305) 262-6978
COMP–ANL\W10–31CGI

SERIES SENTINEL 150 ALUM SLIDING GLASS DOOR (L.M.I.)

CGI WINDOWS & DOORS
10100 N.W. 25TH STREET
MIAMI, FL. 33172
TEL. (305) 593–6590 FAX. (305) 593–6592

revisions:

no	date	by	description
H	01.16.14		REV. PER RER COMMENTS
I	06.09.14		GENERAL REVISION
J	11.12.14		REV. PER RER COMMENTS
K	02.03.15		REV. PER RER COMMENTS

date: 05–20–10
scale: 3/8" = 1"
dr. by:
chk. by:

drawing no.
W10–31

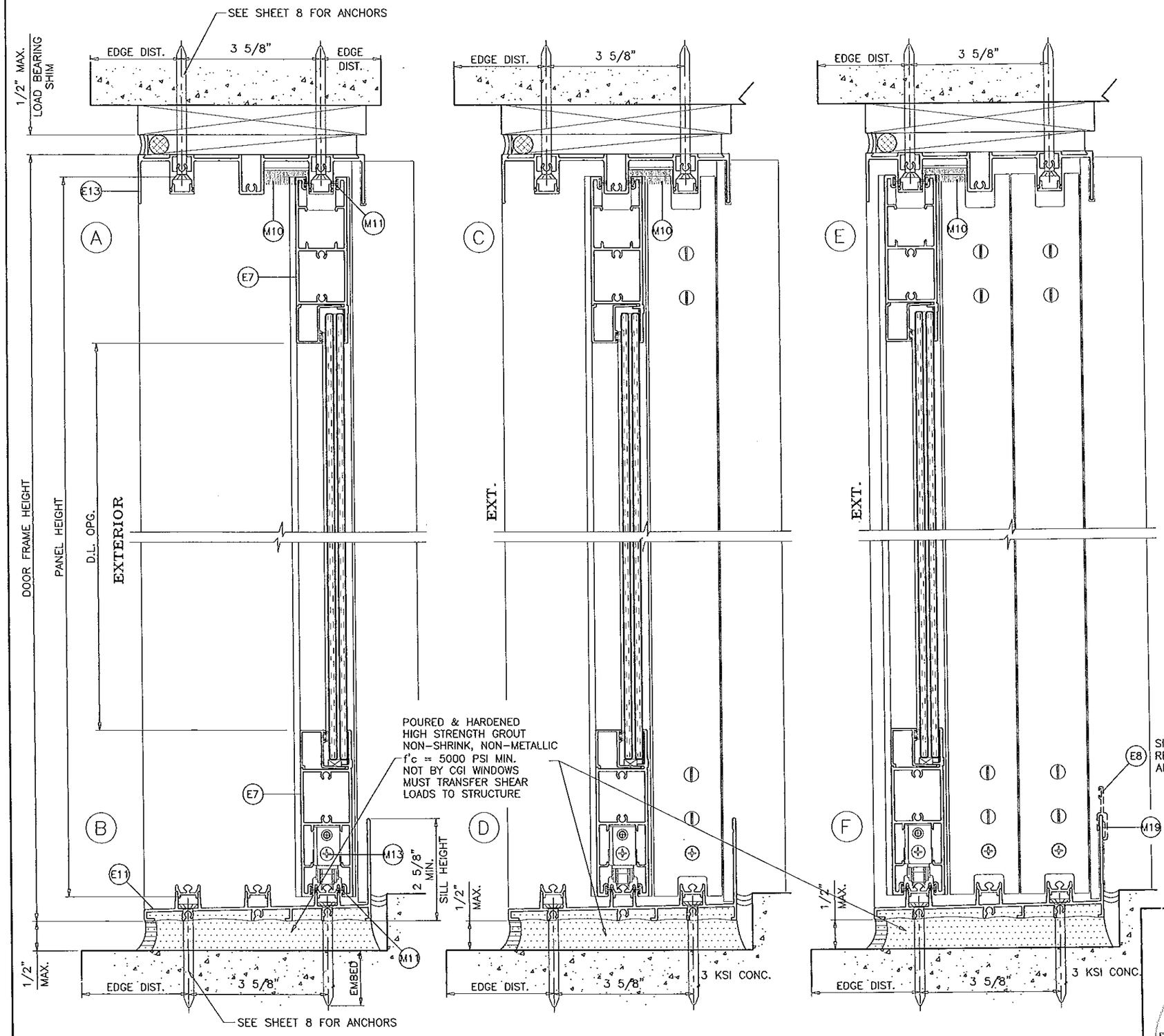

THREE (3) TRACK DOOR DETAILS

WEEP SIZE 1/4" X 1/8"

REFER TO SHEET 8 FOR VARIOUS INSTALLATION CONDITIONS.

OPTIONAL SLANT SILL ADAPTORS

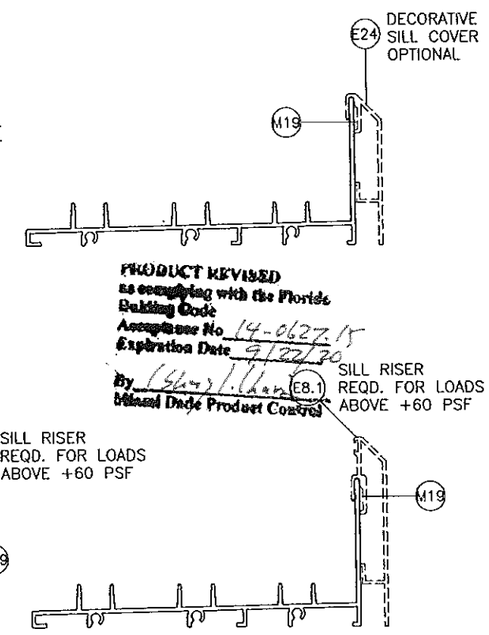

PRODUCT REVISED
as complying with the Florida Building Code
Acceptance No. 14-0627.15
Expiration Date 9/22/20
By (Signature)
Miami Dade Product Control

Engr: JAVAD AHMAD
CIVIL
FLA. PE # 70592
C.A.N. 3538

FEB 2 5 2015

AL-FAROOQ CORPORATION
ENGINEERS & PRODUCT DEVELOPMENT
1235 S.W. 87 AVE
MIAMI, FLORIDA 33174
TEL. (305) 264-8100 FAX. (305) 262-6978
COMP-ANL\W10-31CGI

SERIES SENTINEL 150 ALUM SLIDING GLASS DOOR (L.M.I.)

CGI WINDOWS & DOORS
10100 N.W. 25TH STREET
MIAMI, FL. 33172
TEL. (305) 593-6590 FAX. (305) 593-6592

revisions:

no	date	by	description
H	01.16.14		NO CHANGE THIS SHEET
I	06.09.14		GENERAL REVISION
J	11.12.14		REV. PER RER COMMENTS
K	02.03.15		REV. PER RER COMMENTS

date: 05-20-10
scale: 3/8" = 1"
dr. by:
chk. by:

drawing no.
W10-31

sheet 9 of 16

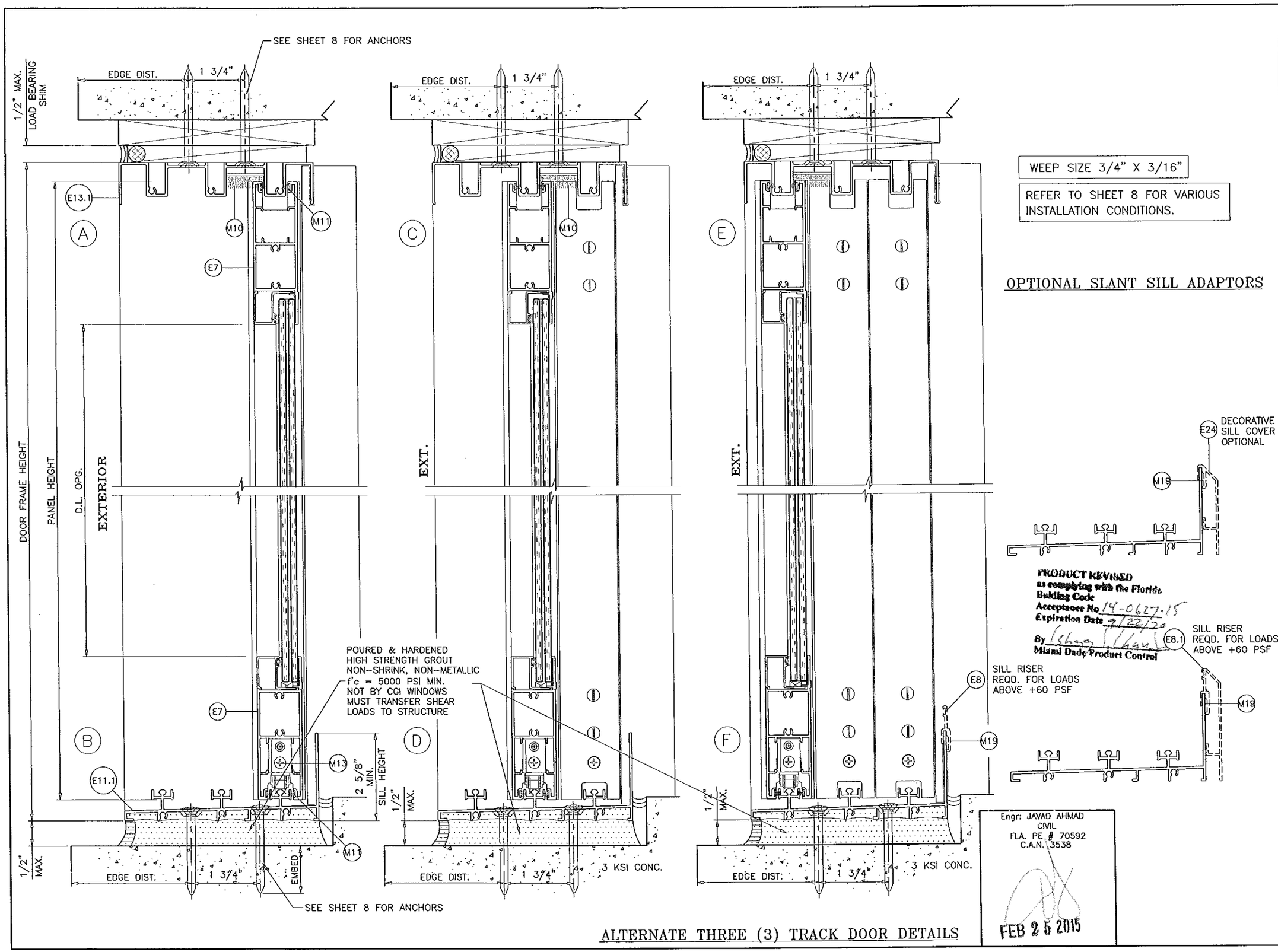

AL-FAROOQ CORPORATION
ENGINEERS & PRODUCT DEVELOPMENT
1235 S.W. 87 AVE
MIAMI, FLORIDA 33174
TEL. (305) 264-8100 FAX. (305) 262-6978
COMP-ANL\W10-31CGI

SERIES SENTINEL 150 ALUM SLIDING GLASS DOOR (L.M.I.)

CGI WINDOWS & DOORS
10100 N.W. 25TH STREET
MIAMI, FL. 33172
TEL. (305) 593-6590 FAX. (305) 593-6592

revisions:

no	date	by	description
H	01.16.14		NO CHANGE THIS SHEET
I	06.09.14		GENERAL REVISION
J	11.12.14		REV. PER RER COMMENTS
K	02.03.15		REV. PER RER COMMENTS

date: 05-20-10
scale: 3/8" = 1"
dr. by:
chk. by:

drawing no.
W10-31

sheet 9.1 of 16

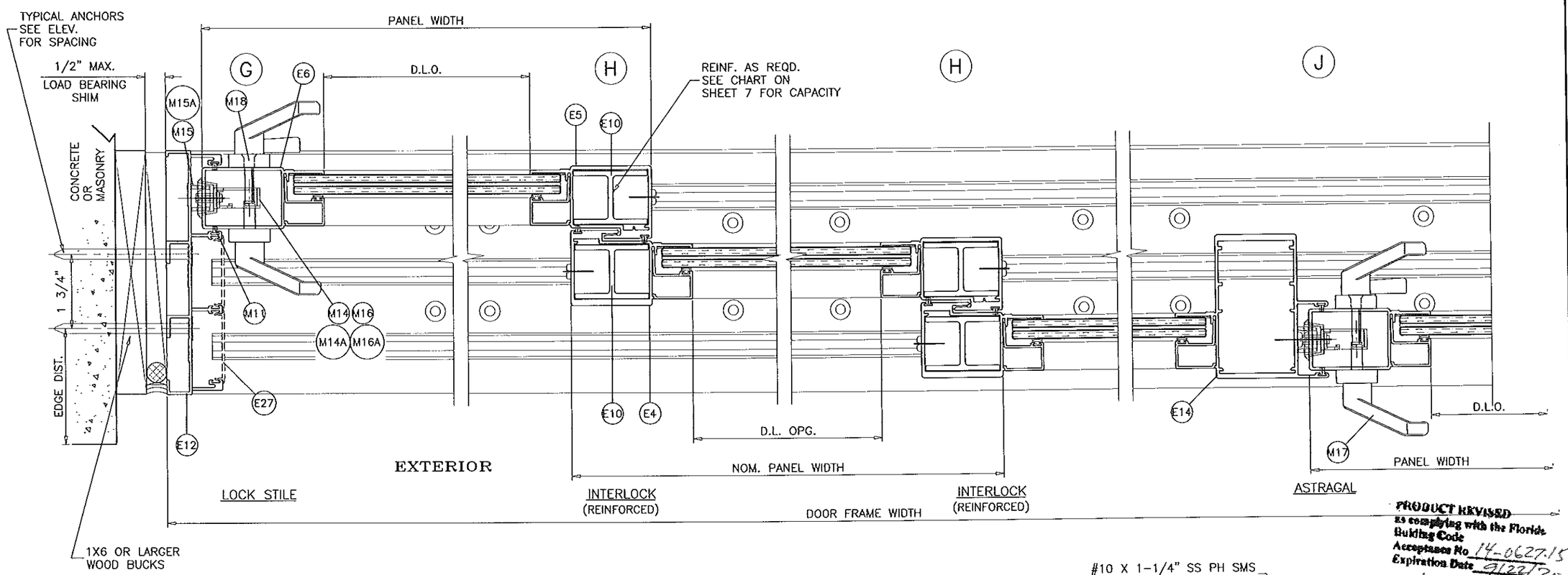

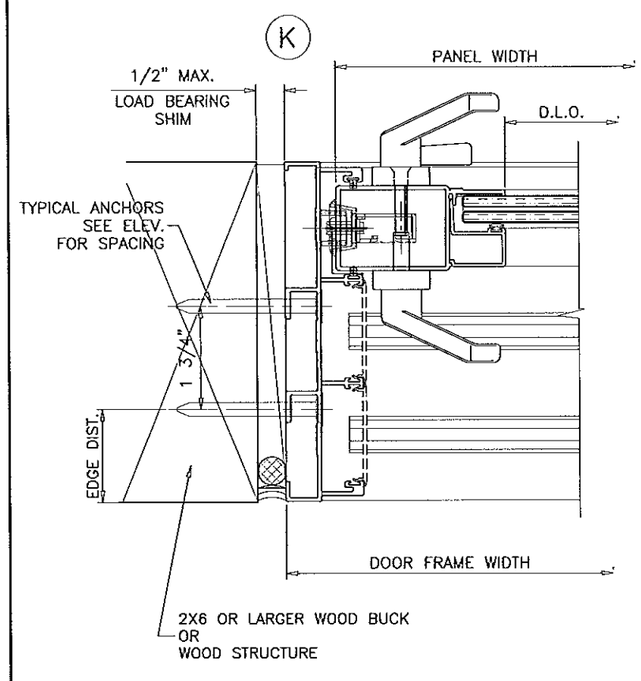

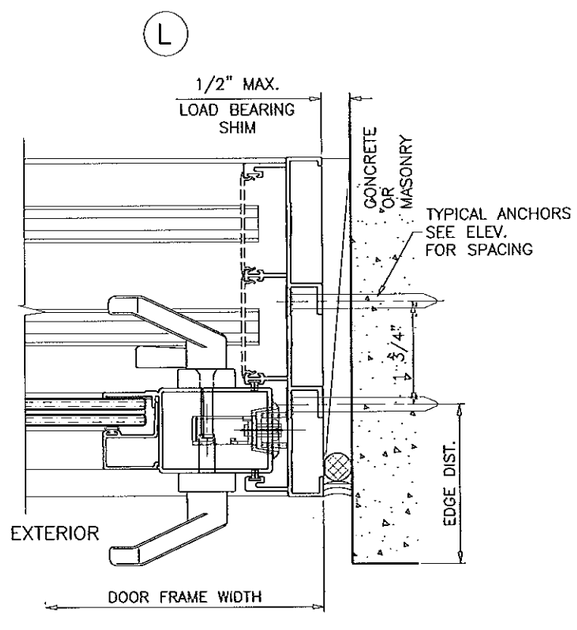

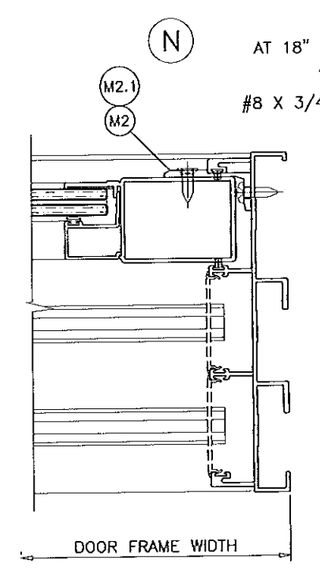

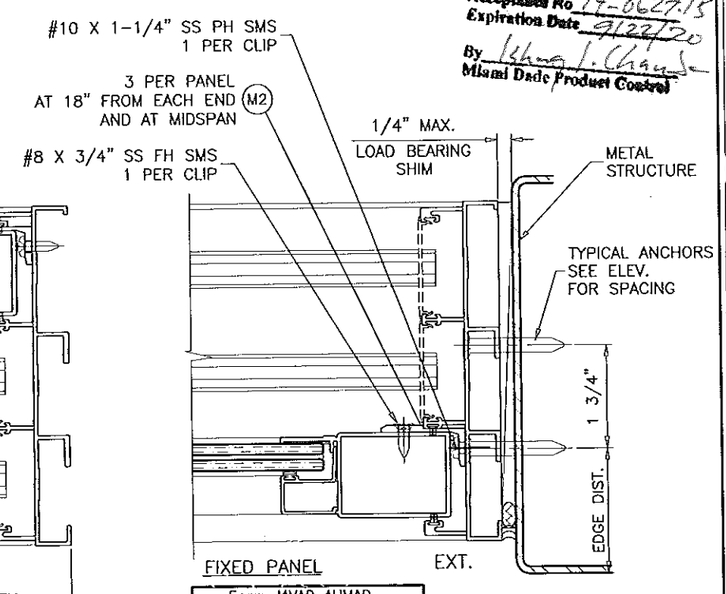

PRODUCT REVISED
as complying with the Florida Building Code
Acceptance No 14-0627.15
Expiration Date 9/22/20
By Ishwar J. Chand
Miami Dade Product Control

Engr: JAVAD AHMAD
CIVIL
FLA. PE # 70592
C.A.N. 3538

FEB 25 2015

THREE (3) TRACK DOOR DETAILS

AL-FAROOQ CORPORATION
ENGINEERS & PRODUCT DEVELOPMENT
1235 S.W. 87 AVE
MIAMI, FLORIDA 33174
TEL. (305) 264-8100 FAX. (305) 262-6978

COMP-ANL\W10-31CGI

SERIES SENTINEL 150 ALUM SLIDING GLASS DOOR (L.M.I.)

CGI WINDOWS & DOORS
10100 N.W. 25TH STREET
MIAMI, FL. 33172
TEL. (305) 593-6590 FAX. (305) 593-6592

revisions:

no	date	by	description
H	01.16.14		NO CHANGE THIS SHEET
I	06.09.14		GENERAL REVISION
J	11.12.14		REV. PER RER COMMENTS
K	02.03.15		REV. PER RER COMMENTS

date: 05-20-10
scale: 3/8" = 1"
dr. by:
chk. by:

drawing no.
W10-31

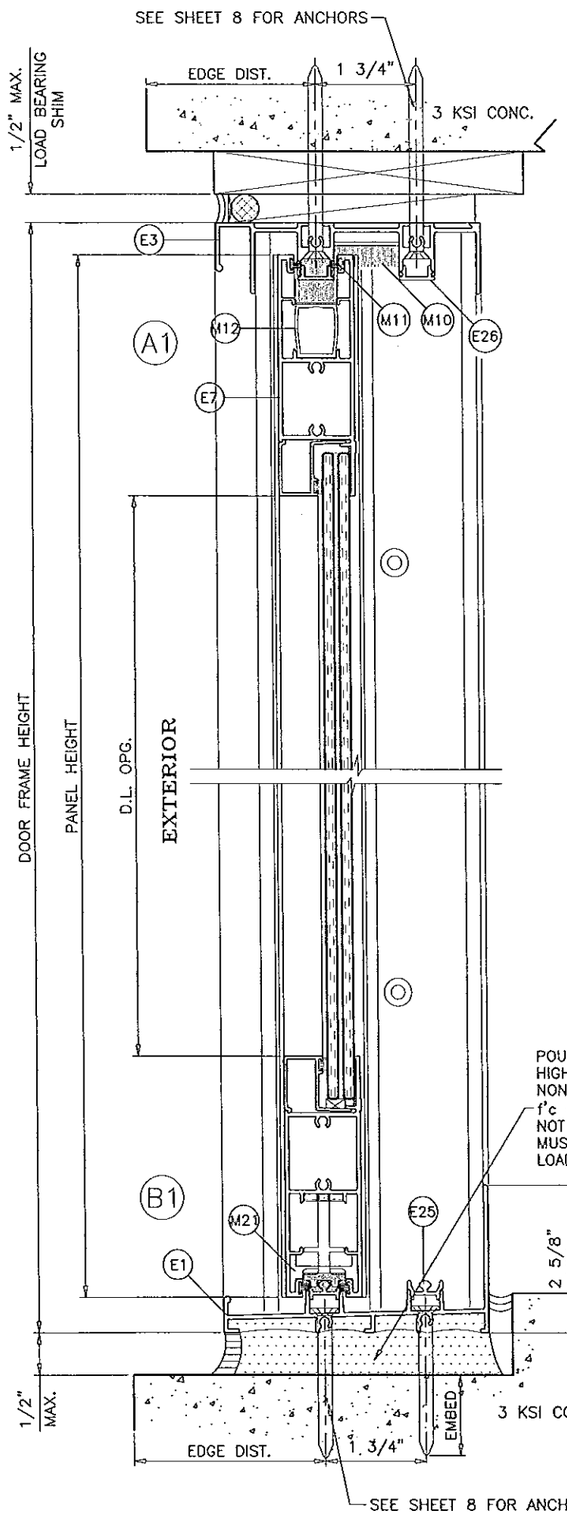

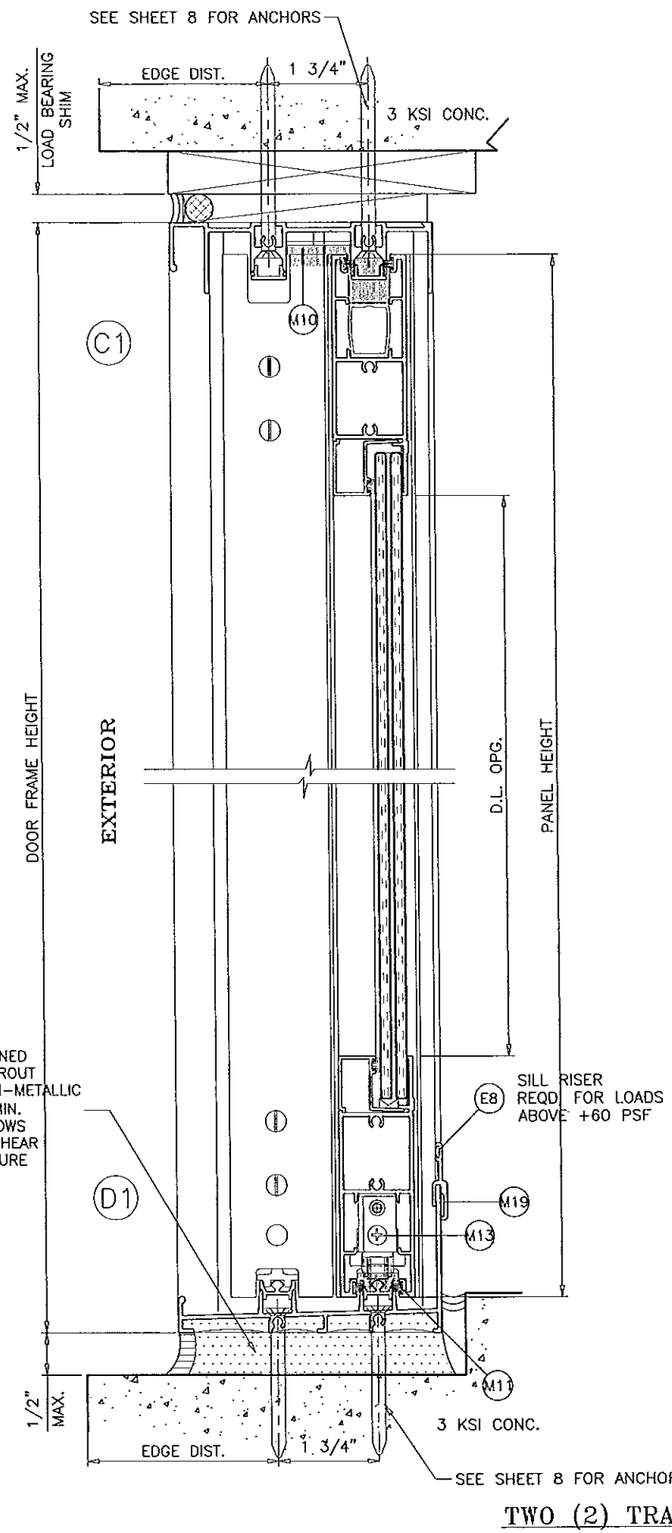

WEEP SIZE 1/4" X 1/8"

REFER TO SHEET 8 FOR VARIOUS INSTALLATION CONDITIONS.

OPTIONAL SLANT SILL ADAPTORS

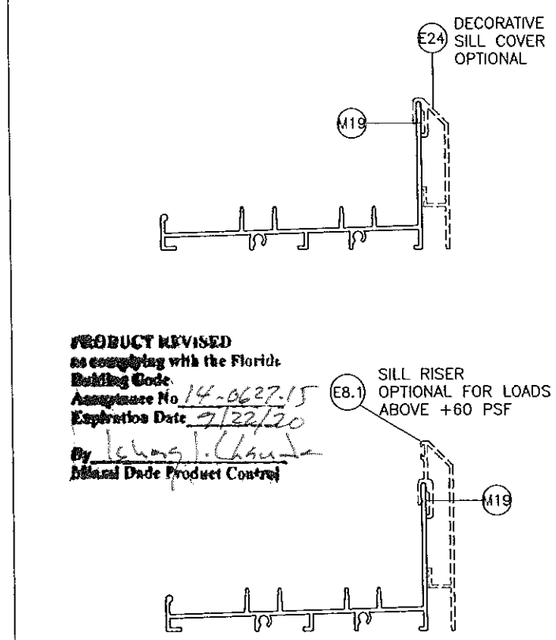

PRODUCT REVISED
as complying with the Florida
Building Code
Acceptance No. 14-0627.15
Expiration Date 9/22/20
By
Miami Dade Product Control

TWO (2) TRACK DOOR DETAILS

Engr: JAVAD AHMAD
CIVIL
FLA. PE # 70592
C.A.N. 3538

FEB 25 2015

AL-FAROOQ CORPORATION
ENGINEERS & PRODUCT DEVELOPMENT
1235 S.W. 87 AVE
MIAMI, FLORIDA 33174
TEL. (305) 264-8100 FAX. (305) 262-6978

COMP-ANL\W10-31CGI

SERIES SENTINEL 150 ALUM SLIDING GLASS DOOR (L.M.I.)

CGI WINDOWS & DOORS
10100 N.W. 25TH STREET
MIAMI, FL. 33172
TEL. (305) 593-6590 FAX. (305) 593-6592

revisions:

no	date	by	description
H	01.16.14		NO CHANGE THIS SHEET
I	06.09.14		GENERAL REVISION
J	11.12.14		REV. PER RER COMMENTS
K	02.03.15		REV. PER RER COMMENTS

date: 05-20-10
scale: 3/8" = 1"
dr. by:
chk. by:

drawing no.
W10-31

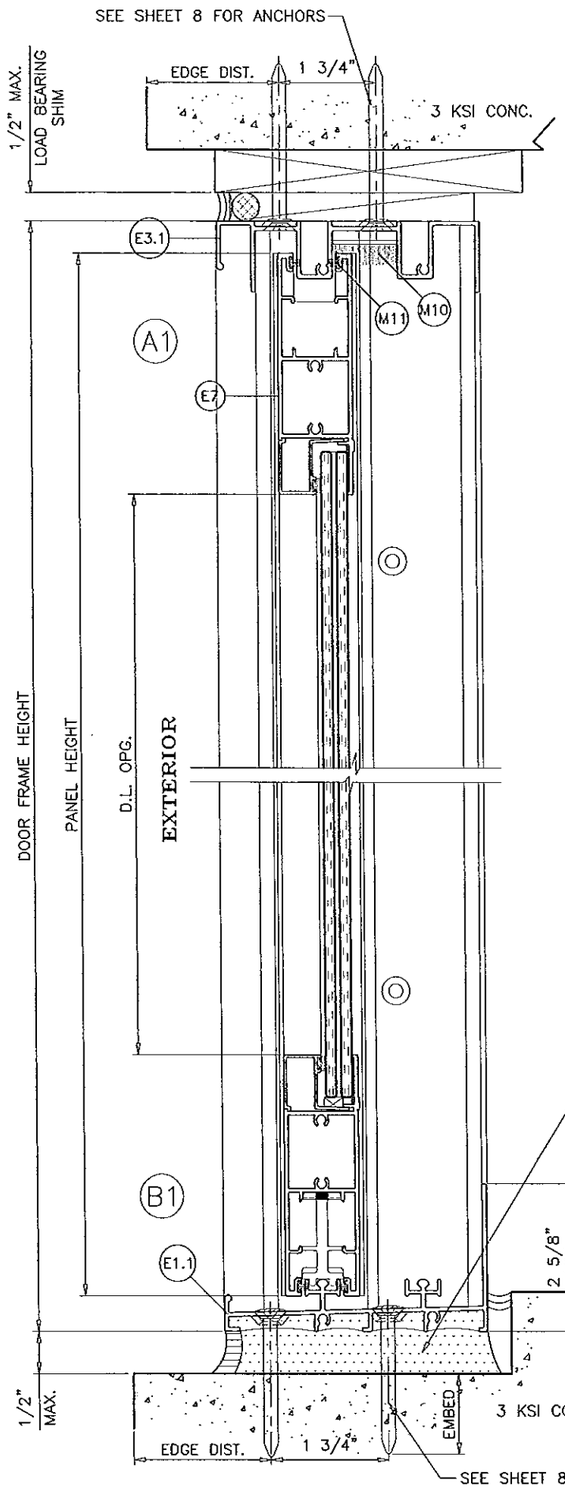

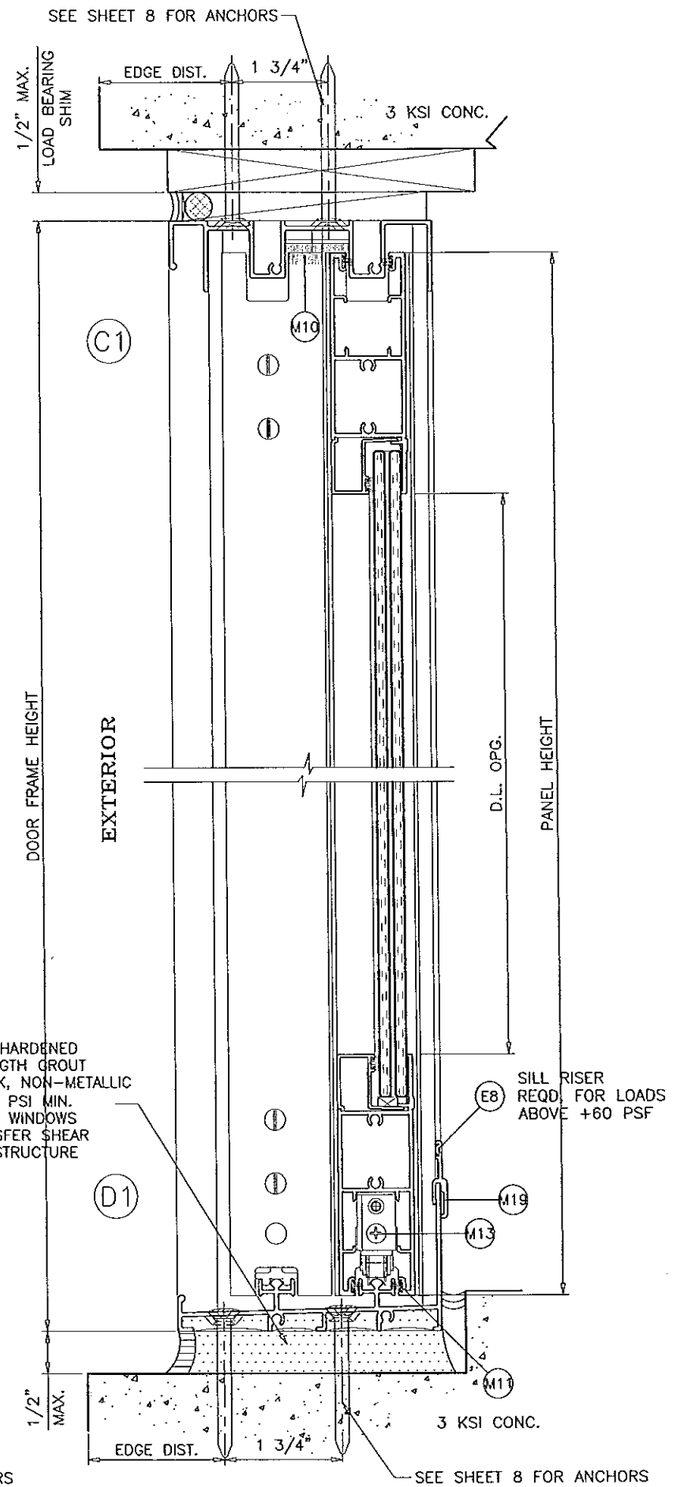

WEEP SIZE 3/4" X 3/16"

REFER TO SHEET 8 FOR VARIOUS INSTALLATION CONDITIONS.

OPTIONAL SLANT SILL ADAPTORS

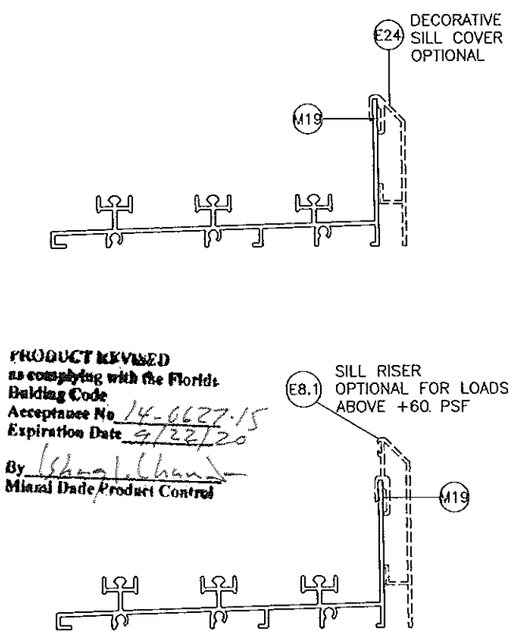

PRODUCT REVIEWED
as complying with the Florida
Building Code
Acceptance No. 14-0627.15
Expiration Date 9/22/20
By
Miami Dade Product Control

ALTERNATE TWO (2) TRACK DOOR DETAILS

Engr: JAVAD AHMAD
CIVIL
FLA. PE # 70592
C.A.N. 3538

FEB 25 2015

AL-FAROOQ CORPORATION
ENGINEERS & PRODUCT DEVELOPMENT
1235 S.W. 87 AVE
MIAMI, FLORIDA 33174
TEL. (305) 264-8100 FAX. (305) 262-6978
COMP-ANL\W10-31CGI

SERIES SENTINEL 150 ALUM SLIDING GLASS DOOR (L.M.I.)

CGI WINDOWS & DOORS
10100 N.W. 25TH STREET
MIAMI, FL. 33172
TEL (305) 593-6590 FAX. (305) 593-6592

revisions:

no	date	by	description
H	01.16.14		NO CHANGE THIS SHEET
I	06.09.14		GENERAL REVISION
J	11.12.14		REV. PER RER COMMENTS
K	02.03.15		REV. PER RER COMMENTS

date: 05-20-10
scale: 3/8" = 1"
dr. by:
chk. by:

drawing no.
W10-31

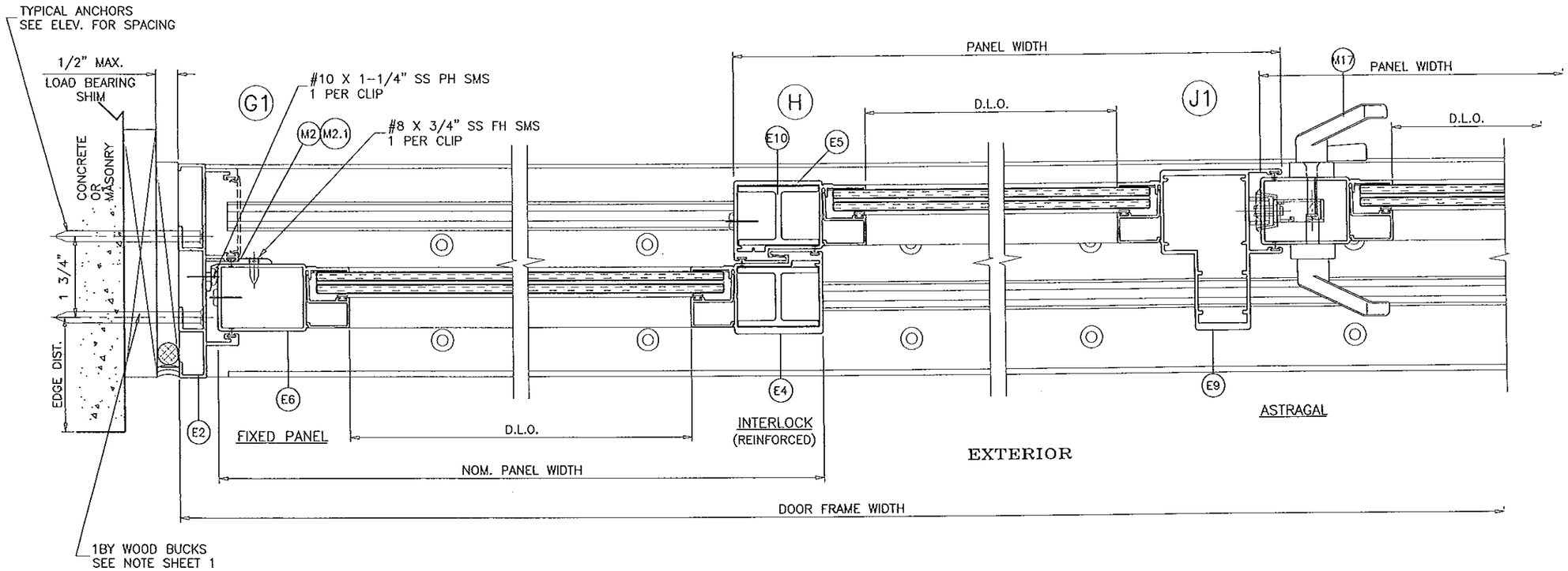

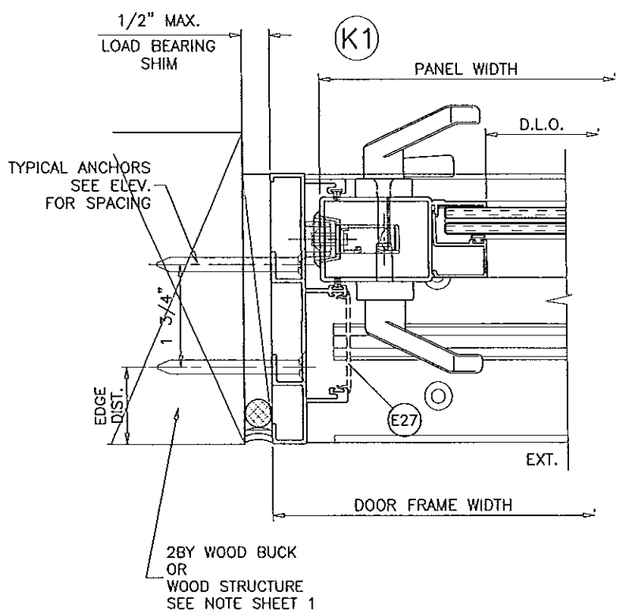

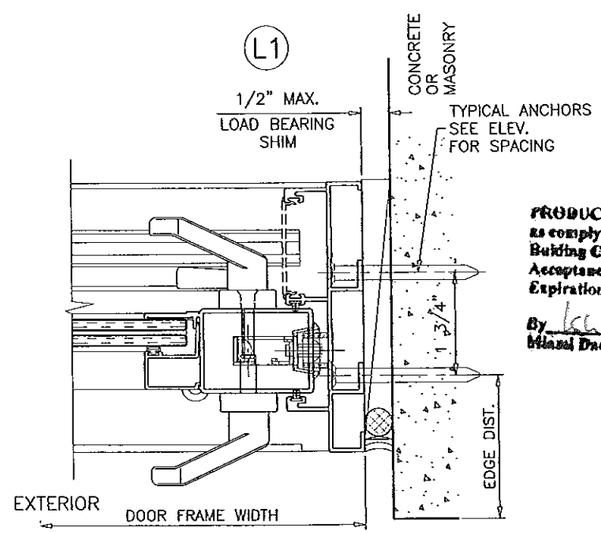

PRODUCT REVISED
as complying with the Florida
Building Code.
Acceptance No 14-0627.15
Expiration Date 9/22/20
By
Miami Dade Product Control

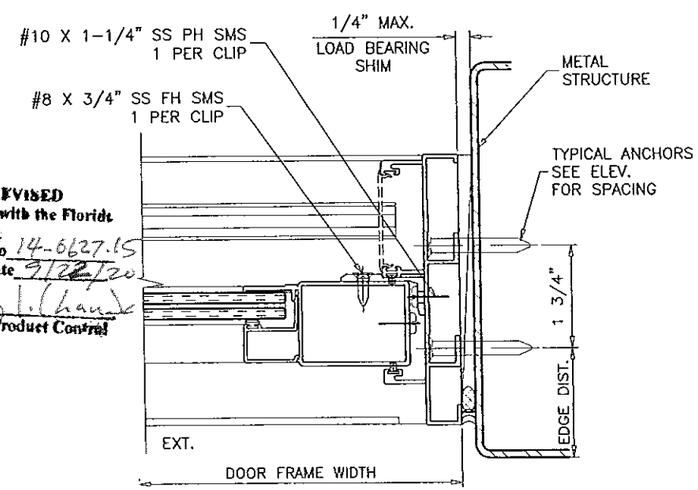

FIXED PANEL

Engr: JAVAD AHMAD
CIVIL
FLA. PE # 70592
C.A.N. 3538

FEB 25 2015

TWO (2) TRACK DOOR DETAILS

AL-FAROOQ CORPORATION
ENGINEERS & PRODUCT DEVELOPMENT
1235 S.W. 87 AVE
MIAMI, FLORIDA 33174
TEL. (305) 264-3100 FAX. (305) 262-6978
COMP-ANL\W10-31CGI

SERIES SENTINEL 150 ALUM SLIDING GLASS DOOR (L.M.I.)

CGI WINDOWS & DOORS
10100 N.W. 25TH STREET
MIAMI, FL. 33172
TEL. (305) 593-6590 FAX. (305) 593-6592

revisions:

no	date	by	description
H	01.16.14		NO CHANGE THIS SHEET
I	06.09.14		GENERAL REVISION
J	11.12.14		REV. PER RER COMMENTS
K	02.03.15		REV. PER RER COMMENTS

date: 05-20-10
scale: 3/8" = 1"
dr. by:
chk. by:

drawing no.
W10-31

REFER TO SHEET 8 FOR VARIOUS INSTALLATION CONDITIONS.

WEEP SIZE 1/4" X 1/8"

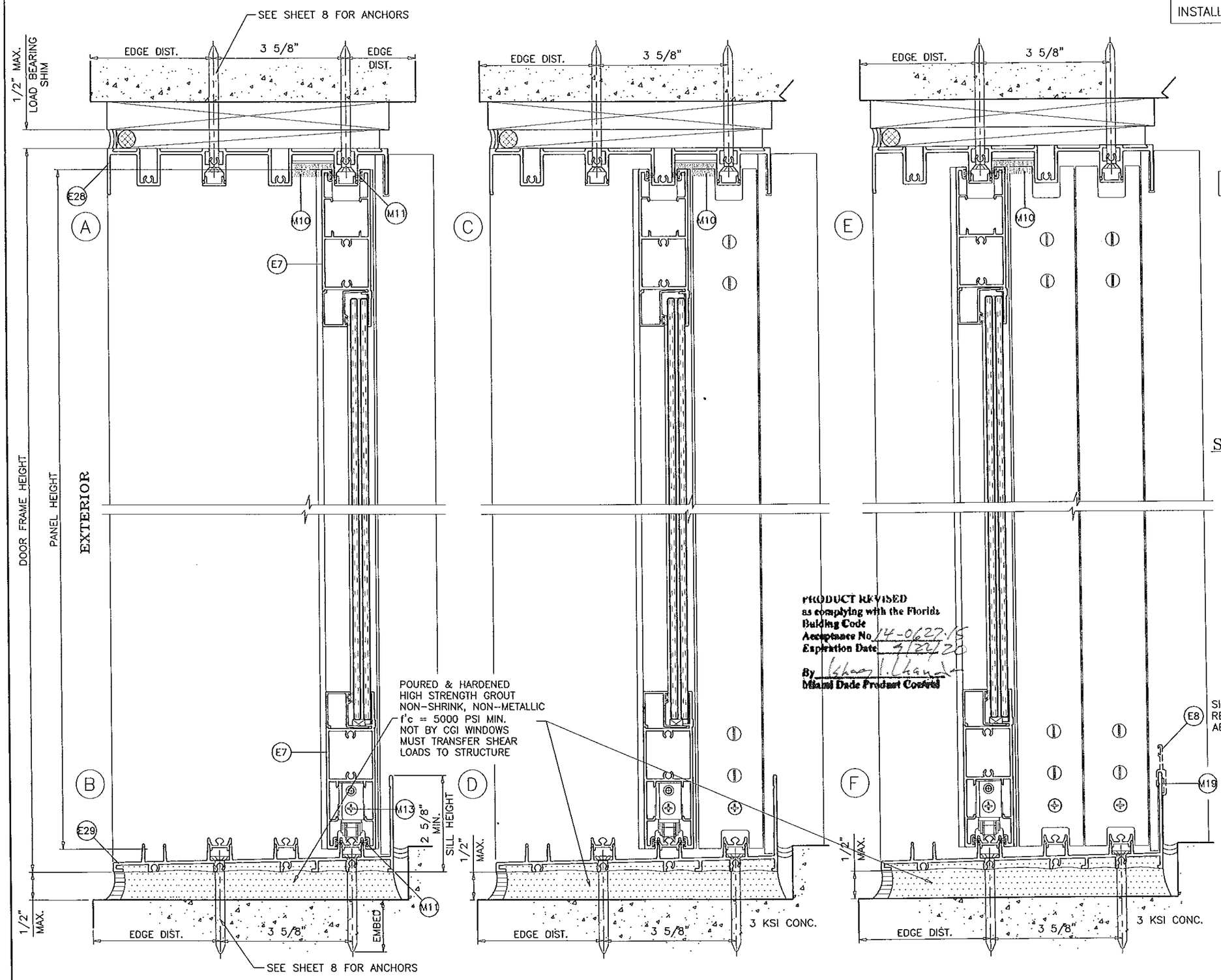

PRODUCT REVISED
as complying with the Florida
Building Code
Acceptance No. 14-0627.15
Expiration Date 4/22/20
By Ishan Chandra
Miami Dade Product Control

OPTIONAL
SLANT SILL ADAPTORS

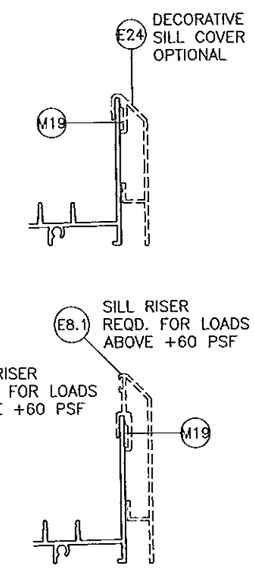

Engr: JAVAD AHMAD
CIVIL
FLA. PE # 70592
C.A.N. 3538

FEB 25 2015

FOUR (4) TRACK DOOR DETAILS

AL-FAROOQ CORPORATION
ENGINEERS & PRODUCT DEVELOPMENT
1235 S.W. 87 AVE
MIAMI, FLORIDA 33174
TEL. (305) 264-8100 FAX. (305) 262-6978

COMP-ANL\W10-31CGI

SERIES SENTINEL 150 ALUM SLIDING GLASS DOOR (L.M.I.)

CGI WINDOWS & DOORS
10100 N.W. 25TH STREET
MIAMI, FL. 33172
TEL. (305) 593-6590 FAX. (305) 593-6592

revisions:

no	date	by	description
H	01.16.14		NO CHANGE THIS SHEET
I	06.09.14		GENERAL REVISION
J	11.12.14		REV. PER RER COMMENTS
K	02.03.15		REV. PER RER COMMENTS

date: 05-20-10
scale: 3/8" = 1"
dr. by:
chk. by:

drawing no.
W10-31

sheet 12.1 of 16

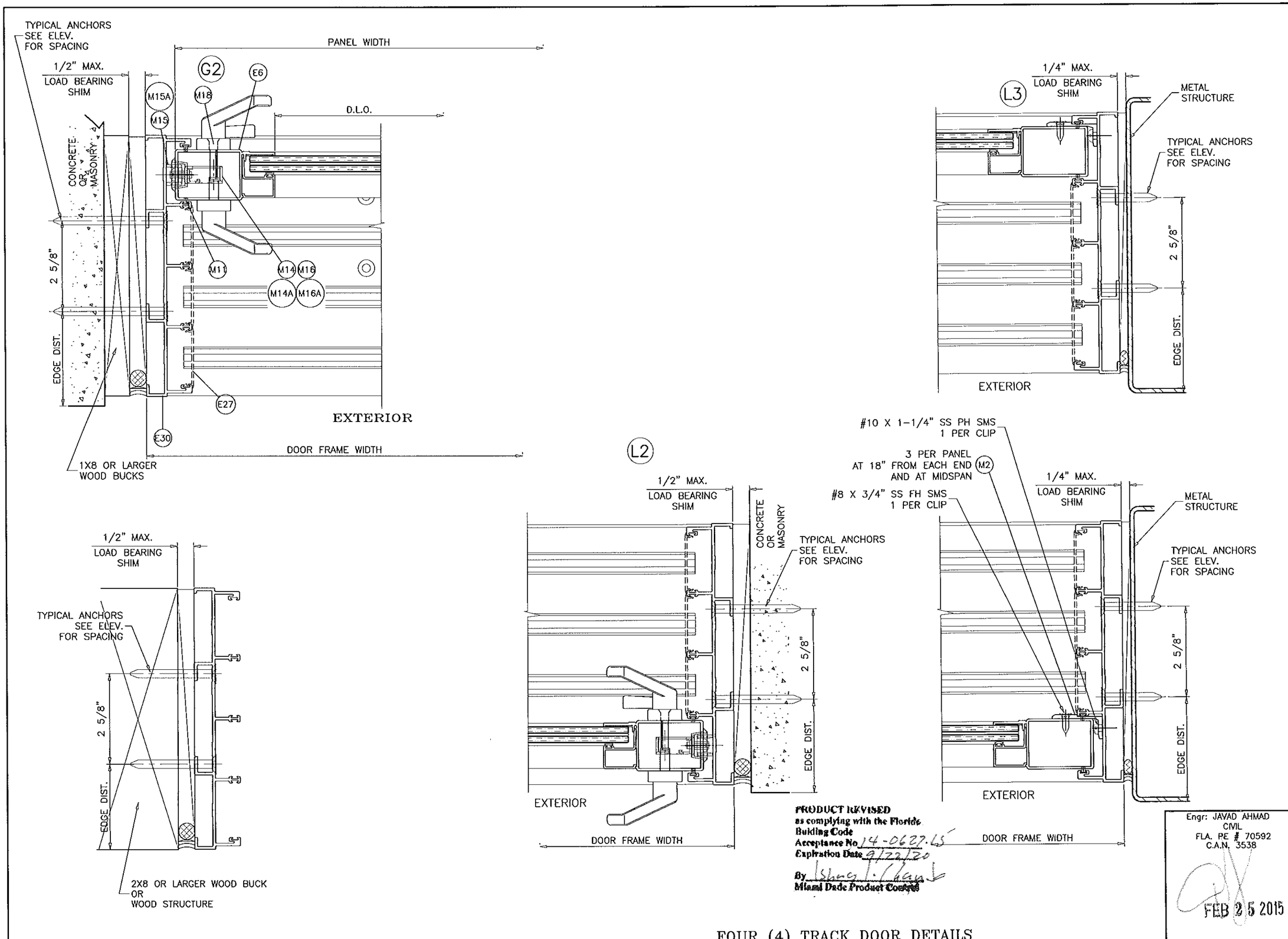

PRODUCT REVISED
as complying with the Florida Building Code
Acceptance No. 14-0627.65
Expiration Date 9/22/20
By [signature]
Miami Dade Product Control

FOUR (4) TRACK DOOR DETAILS

Engr: JAVAD AHMAD
CIVIL
FLA. PE # 70592
C.A.N. 3538

FEB 25 2015

AL-FAROOQ CORPORATION
ENGINEERS & PRODUCT DEVELOPMENT
1235 S.W. 87 AVE
MIAMI, FLORIDA 33174
TEL. (305) 264-8100 FAX. (305) 262-6978
COMP-ANL\W10-31CGI

SERIES SENTINEL 150 ALUM SLIDING GLASS DOOR (L.M.I.)

CGI WINDOWS & DOORS
10100 N.W. 25TH STREET
MIAMI, FL. 33172
TEL. (305) 593-6590 FAX. (305) 593-6592

revisions:

no	date	by	description
H	01.16.14		NO CHANGE THIS SHEET
I	06.09.14		GENERAL REVISION
J	11.12.14		REV. PER RER COMMENTS
K	02.03.15		REV. PER RER COMMENTS

date: 05-20-10
scale: 3/8" = 1"
dr. by:
chk. by:

drawing no. W10-31

sheet 12.2 of 16

EXTERIOR MOUNTED POCKETED JAMB

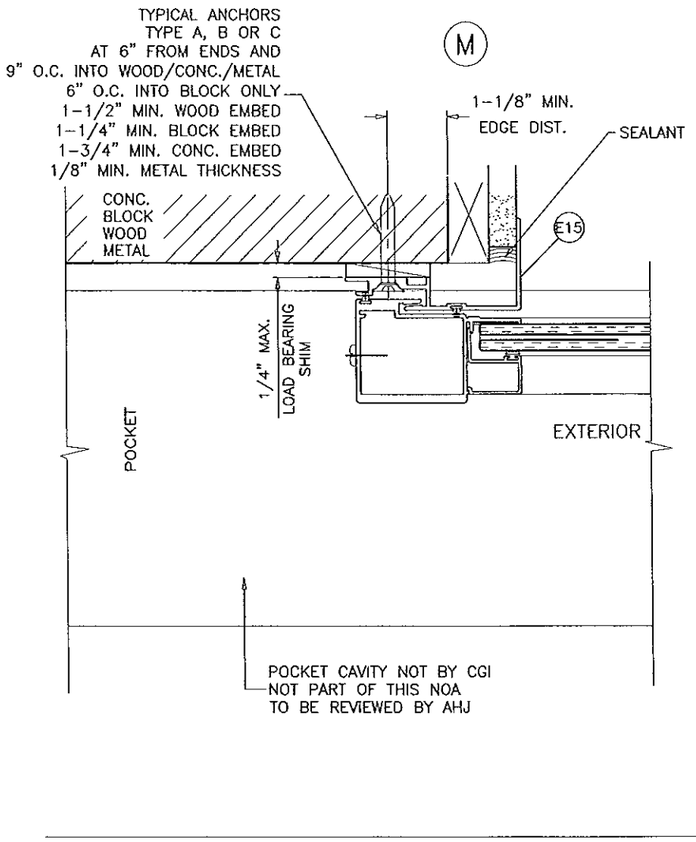

TYPICAL PAD PILE INSTALATION LOCATION

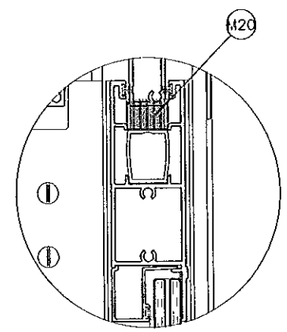

TYPICAL AT PANEL 4 CORNERS

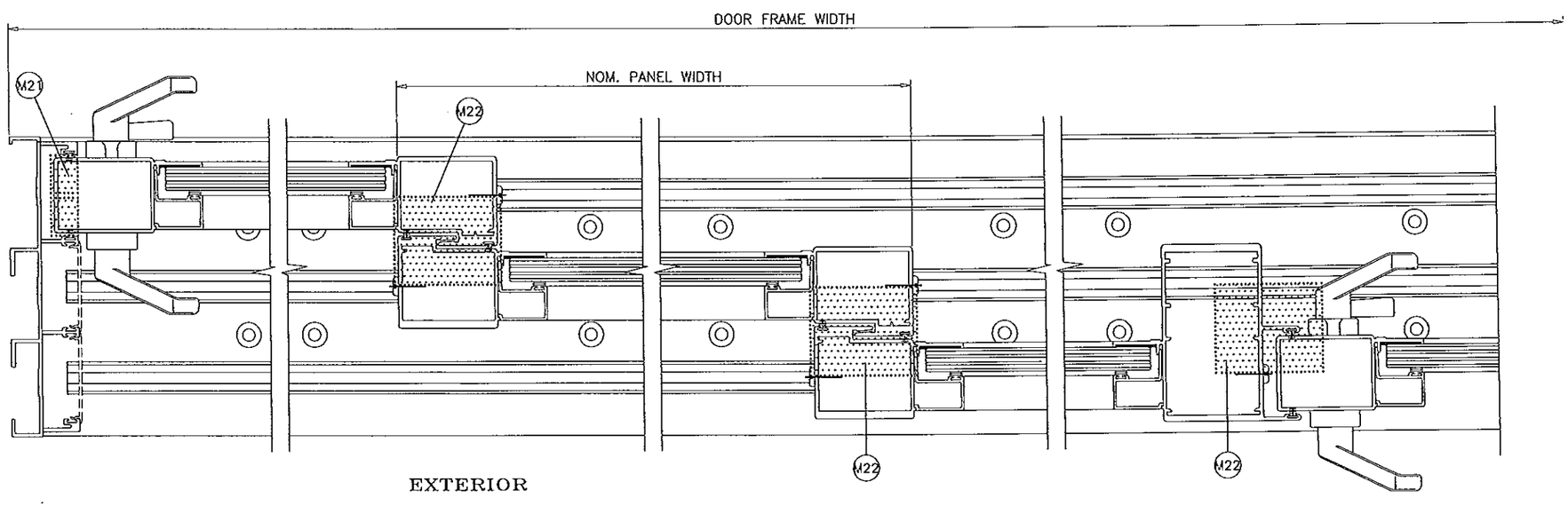

PRODUCT REVISED
as complying with the Florida Building Code
Acceptance No. 14-0627.15
Expiration Date 9/22/20
By Shaq I. Chand
Miami Dade Product Control

Engr: JAVAD AHMAD
CIVIL
FLA. PE # 70592
C.A.N. 3538

FEB 25 2015

AL-FAROOQ CORPORATION
ENGINEERS & PRODUCT DEVELOPMENT
1235 S.W. 87 AVE
MIAMI, FLORIDA 33174
TEL. (305) 264-8100 FAX. (305) 262-6978

COMP-ANL\W10-31CGI

SERIES SENTINEL 150 ALUM SLIDING GLASS DOOR (L.M.I.)

CGI WINDOWS & DOORS
10100 N.W. 25TH STREET
MIAMI, FL. 33172
TEL. (305) 593-6590 FAX. (305) 593-6592

revisions:

no	date	by	description
H	01.16.14		NO CHANGE THIS SHEET
I	06.09.14		GENERAL REVISION
J	11.12.14		REV. PER RER COMMENTS
K	02.03.15		REV. PER RER COMMENTS

date: 05-20-10
scale: 3/8" = 1"
dr. by:
chk. by:

drawing no.
W10-31

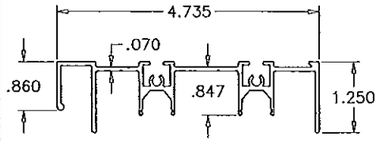

E3 FRAME HEAD (2 TRACK)

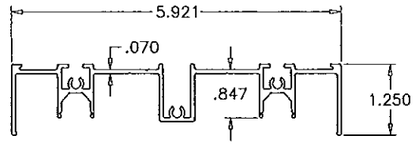

E13 FRAME HEAD (3 TRACK)

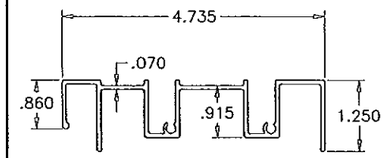

E3.1 ALT. FRAME HEAD (2 TRACK)

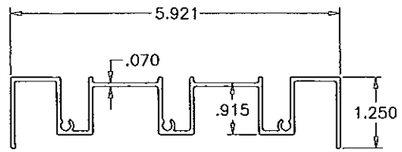

E13.1 ALT. FRAME HEAD (3 TRACK)

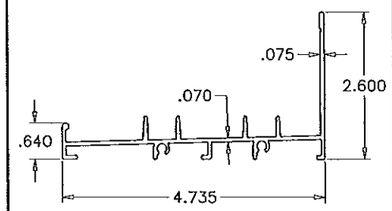

E1 FRAME SILL (2 TRACK)

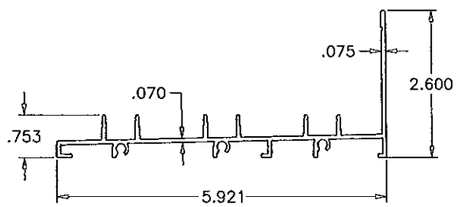

E11 FRAME SILL (3 TRACK)

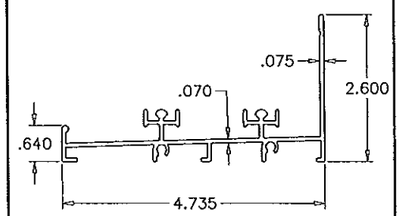

E1.1 ALT. FRAME SILL (2 TRACK)

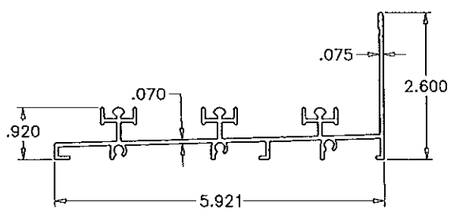

E11.1 ALT. FRAME SILL (3 TRACK)

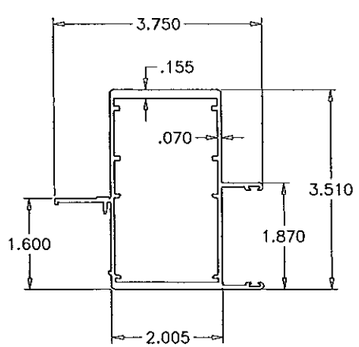

E14 OUTER TRACK ASTRAGAL STILE

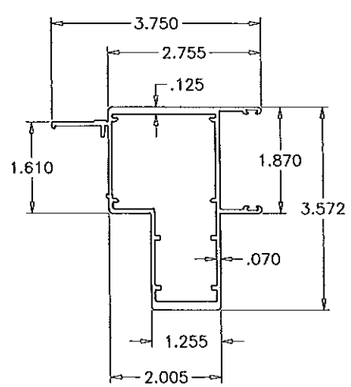

E9 ASTRAGAL STILE

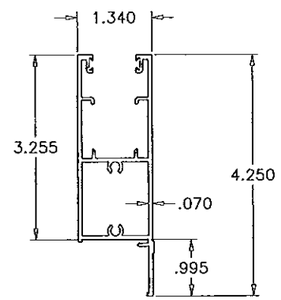

E7 TOP/BOTTOM HORIZ

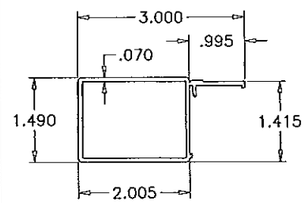

E6 MAIN STILE

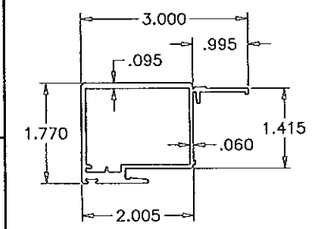

E5 INTERIOR INTERLOCK

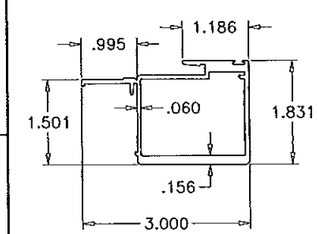

E4 EXTERIOR INTERLOCK

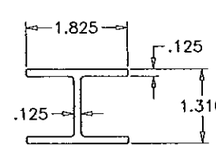

E10 INTERLOCK REINFORCING

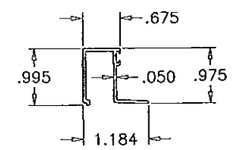

E16 GLAZING BEAD
LAM. GLASS

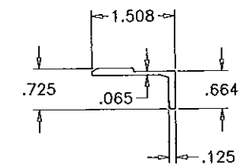

M2 FIX. PANEL CLIP

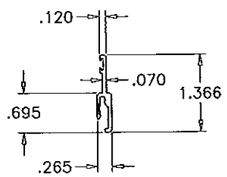

E8 SILL RISER (OPTIONAL)

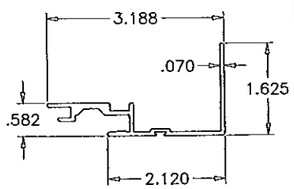

E15 POCKET HOOK

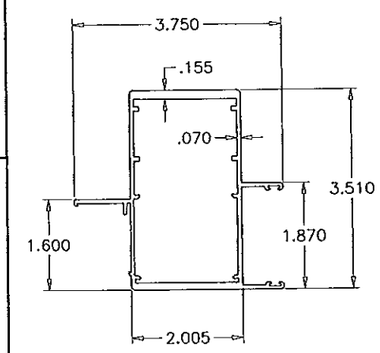

E23 OUTER TRACK ASTRAGAL (OPTIONAL)

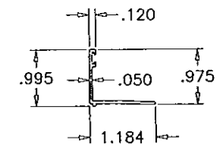

E17 GLAZING BEAD
INSUL. LAM. GLASS

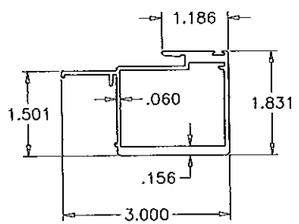

E18 EXTERIOR INTERLOCK (OPTIONAL)

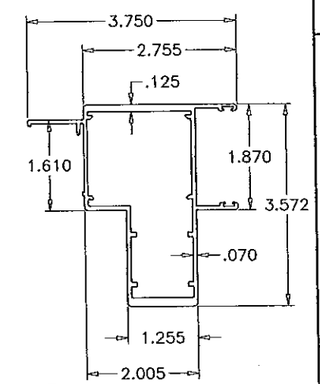

E22 ASTRAGAL (OPTIONAL)

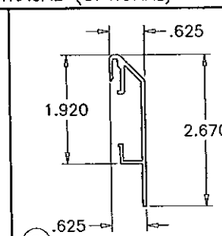

E24 SILL COVER(OPTIONAL)

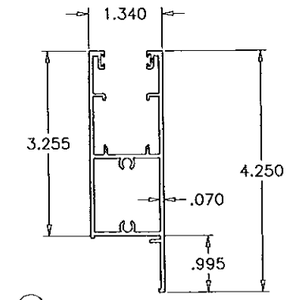

E21 TOP/BOTTOM HORIZ (OPTIONAL)

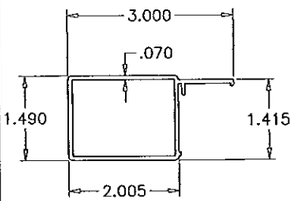

E20 MAIN STILE (OPTIONAL)

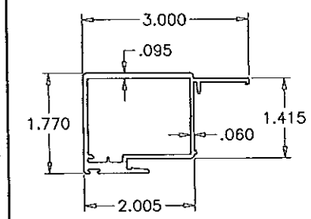

E19 INTERIOR INTERLOCK (OPTIONAL)

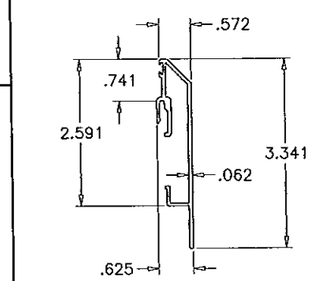

E8.1 SILL RISER (OPTIONAL)

Engr: JAVAD AHMAD
CIVIL
FLA. PE # 70592
C.A.N. 3538

FEB 25 2015

PRODUCT REVISED
as complying with the Florida
Building Code
Acceptance No. 14-0627.1
Expiration Date 9/22/20
By Ishan Chandra
Miami Dade Product Control

AL-FAROOQ CORPORATION
ENGINEERS & PRODUCT DEVELOPMENT
1235 S.W. 87 AVE
MIAMI, FLORIDA 33174
TEL. (305) 264-8100 FAX. (305) 262-6978
COMP-ANL\W10-31CGI

SERIES SENTINEL 150 ALUM SLIDING GLASS DOOR (L.M.I.)

CGI WINDOWS & DOORS
10100 N.W. 25TH STREET
MIAMI, FL. 33172
TEL. (305) 593-6590 FAX. (305) 593-6592

revisions:

no	date	by	description
H	01.16.14		NO CHANGE THIS SHEET
I	06.09.14		GENERAL REVISION
J	11.12.14		REV. PER RER COMMENTS
K	02.03.15		NO CHANGE THIS SHEET

date: 05-20-10
scale: 3/8" = 1"
dr. by:
chk. by:

drawing no.
W10-31

CODE	PART No.	DESCRIPTION	MATERIAL	MANUF.	REMARKS
E1	CGI-183	FRAME SILL 2 TRACK	6063-T6	CGI EXTRUDER	--
E1.1	CGI-150	ALT. FRAME SILL 2 TRACK	6063-T6	CGI EXTRUDER	-
E2	CGI-151	FRAME JAMB 2 TRACK	6063-T6	CGI EXTRUDER	-
E3	CGI-186	FRAME HEAD 2 TRACK	6063-T6	CGI EXTRUDER	-
E3.1	CGI-152	ALT. FRAME HEAD 2 TRACK	6063-T6	CGI EXTRUDER	-
E4	CGI-153	EXTERIOR INTERLOCK	6063-T6	CGI EXTRUDER	-
E5	CGI-154	INTERIOR INTERLOCK	6063-T6	CGI EXTRUDER	-
E6	CGI-155	MAIN STILE	6063-T6	CGI EXTRUDER	-
E7	CGI-156	TOP & BOTTOM HORIZ	6063-T6	CGI EXTRUDER	-
E8	CGI-157	SILL RISER	6063-T6	CGI EXTRUDER	-
E8.1	CGI-181	ALT. SILL RISER(OPTIONAL)	6063-T6	CGI EXTRUDER	-
E9	CGI-158	ASTRAGAL	6063-T6	CGI EXTRUDER	--
E10	CGI-159	INTERLOCK REINFORCING (LENGTH = FRAME HT. - 8")	6063-T6	CGI EXTRUDER	-
E11	CGI-182	FRAME SILL 3 TRACK	6063-T6	CGI EXTRUDER	-
E11.1	CGI-160	ALT. FRAME SILL 3 TRACK	6063-T6	CGI EXTRUDER	-
E12	CGI-161	FRAME JAMB 3 TRACK	6063-T6	CGI EXTRUDER	-
E13	CGI-185	FRAME HEAD 3 TRACK	6063-T6	CGI EXTRUDER	-
E13.1	CGI-162	ALT. FRAME HEAD 3 TRACK	6063-T6	CGI EXTRUDER	-
E14	CGI-168	OUTER-TRACK ASTRAGAL	6063-T6	CGI EXTRUDER	-
E15	CGI-170	POCKET HOOK	6063-T6	CGI EXTRUDER	-
E16	CGI-121	7/16" GLASS GLAZING BEAD	6063-T5	CGI EXTRUDER	-
E17	CGI-123	1" GLASS GLAZING BEAD	6063-T5	CGI EXTRUDER	-
E18	CGI-153A	EXTERIOR INTERLOCK (OPTIONAL)	6063-T6	CGI EXTRUDER	-
E19	CGI-154A	INTERIOR INTERLOCK (OPTIONAL)	6063-T6	CGI EXTRUDER	-
E20	CGI-155A	MAIN STILE (OPTIONAL)	6063-T6	CGI EXTRUDER	-
E21	CGI-156A	TOP & BOTTOM HORIZ (OPTIONAL)	6063-T6	CGI EXTRUDER	-
E22	CGI-158A	ASTRAGAL (OPTIONAL)	6063-T6	CGI EXTRUDER	-
E23	CGI-168A	OUTER-TRACK ASTRAGAL (OPTIONAL)	6063-T6	CGI EXTRUDER	-
E24	CGI-180	DECORATIVE SILL COVER (OPTIONAL)	6063-T6	CGI EXTRUDER	-
E25	CGI-184	2 & 3 TRACK FRAME SILL SCREW COVER	6063-T6	CGI EXTRUDER	--
E26	CGI-187	2 & 3 TRACK FRAME HEAD SCREW COVER	6063-T5	CGI EXTRUDER	-
E27	CGI-188	FRAME JAMB SCREW COVER (OPTIONAL)	6063-T5	CGI EXTRUDER	-
E28	CGI-1028	FRAME HEAD 4 TRACK	6063-T6	CGI EXTRUDER	-
E29	CGI-1029	FRAME SILL 4 TRACK	6063-T6	CGI EXTRUDER	--
E30	CGI-1030	FRAME JAMB 4 TRACK	6063-T6	CGI EXTRUDER	-
M1	CGI-382V	GLAZING BULB VINYL (DUROMETER 75-80 SHORE A)	PVC	-	--
M2	CGI-171C	FIXED PANEL CLIP (2-1/2" LONG)	6063-T5	-	3 @ FIXED PANEL
M3	CGI-173	FIXED PANEL SHIM	NYLON	-	2 PER FIXED PANEL
M10	CGI-176	FRAME HEAD ANTILIFT & PAD PILE	WOOL/NYLON	SULLIVAN	1 PER INTERLOCK/ASTR.
M11	W23201NG	PILE WITH CENTER FIN	WOOL	ULTRAFAB OR EQUIV.	-
M12	CGI-177	PANEL TOP & BOTTOM DUST PILE	WOOL/PVC	SULLIVAN	--
M13	TA-51-PRS-150-C2SS	TANDEM ROLLER	ST/ST	AMESBURY	2 PER PANEL
M14	SGD-500	DUAL MORTISE LOCK	ST/ST	SULLIVAN	ATTACHED TO SGD-503
M14A	PS01-0036-117	DUAL MORTISE LOCK	ST/ST	INTERLOCKS	ATTACHED TO M16A
M15	SGD-507	KEEPER	ZINC	SULLIVAN	INST. W/ 2 #10X3/4" PH
M15A	SGD-507N	KEEPER	ZINC	INTERLOCKS	INST. W/ 2 #10X3/4" PH
M16	SGD-503	RECESSED ADAPTOR	ZINC	SULLIVAN	INST. W/ 2 #10X3/4" FH
M16A	PS01-0036-117	RECESSED ADAPTOR	ZINC	INTERLOCKS	INST. W/ 2 #10X3/4" FH
M17	SGD-5500	HANDLE SET	ZINC	SULLIVAN/INTERLOCKS	-
M18	SM2300WH	HANDLE SET OPTIONAL	ZINC	SULLIVAN	--
M19	SCS2000 SILPRUF	SEALANT	SILICONE	GE	--
M20	CGI-177	PANEL TOP & BOTTOM DUST PILE	WOOL	SULLIVAN OR EQUIV.	4 PER PANEL
M21	CGI-174	HEAD AND SILL SMALL PILE PAD	WOOL	ULTRAFAB OR EQUIV.	1 PER INTERLOCK/ASTRAGAL
M22	CGI-175	SILL INTERLOCK PILE PAD	WOOL	ULTRAFAB OR EQUIV.	
S2	-	#10 X 1 1/4" LG. PHL. PH. SMS. ST/ST. ASSEMBLY SCREW	-	--	2 OR 3 PER CORNER

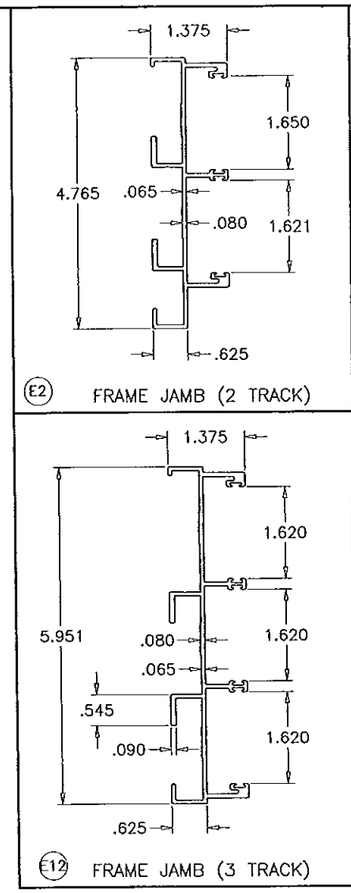

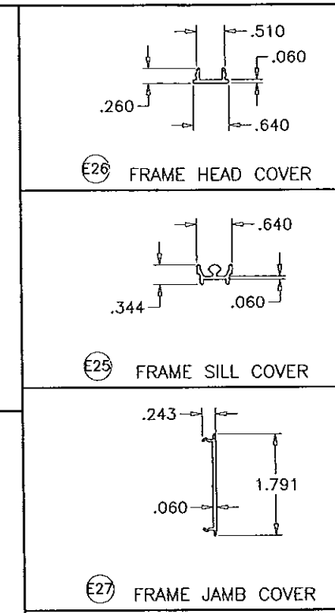

PRODUCT REVISED
as complying with the Florida
Building Code
Acceptance No. 14-0627.15
Expiration Date 9/22/20
By Ishwar I. Lalwani
Miami Dade/Product Control

LOCK:

DUAL LOCK SYSTEM BY 'SULLIVAN' OR 'INTERLOCK' LOCATED AT MAIN STILE AT 40" FROM BOTTOM
SS MORTISE LOCK (PART #SGD-500) (PS01-0036-117)
ZINC RECESSED ADAPTOR (PART #SGD-503) (PS01-0036-117)
ZINC HANDLE SET (PART #SM5500) & (PART #SM2300WH)
ZINC KEEPER (PART #SGD-507) (PART #SGD-507N)

Engr. JAVAD AHMAD
CIVIL
FLA. PE # 70592
C.A.N. 3538

FEB 25 2015

AL-FAROOQ CORPORATION
ENGINEERS & PRODUCT DEVELOPMENT
1235 S.W. 87 AVE
MIAMI, FLORIDA 33174
TEL. (305) 264-8100 FAX. (305) 262-6978

COMP-ANL\W10-31CGI

SERIES SENTINEL 150 ALUM SLIDING GLASS DOOR (L.M.I.)

CGI WINDOWS & DOORS
10100 N.W. 25TH STREET
MIAMI, FL. 33172
TEL (305) 593-6590 FAX. (305) 593-6592

revisions:

no	date	by	description
H	01.16.14		NO CHANGE THIS SHEET
I	06.09.14		GENERAL REVISION
J	11.12.14		REV. PER RER COMMENTS
K	02.03.15		REV. PER RER COMMENTS

date: 05-20-10
scale: 3/8" = 1"
dr. by:
chk. by:

drawing no.
W10-31

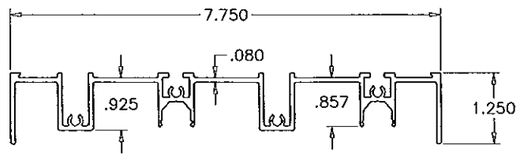

E28 FRAME HEAD (4 TRACK)

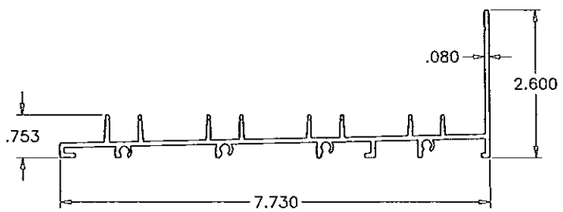

E29 FRAME SILL (4 TRACK)

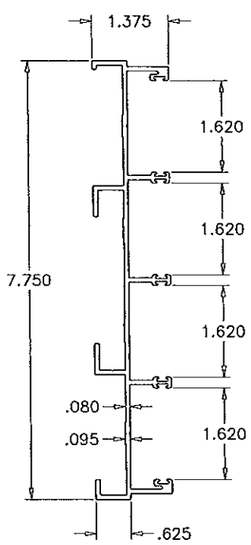

E30 FRAME JAMB (4 TRACK)

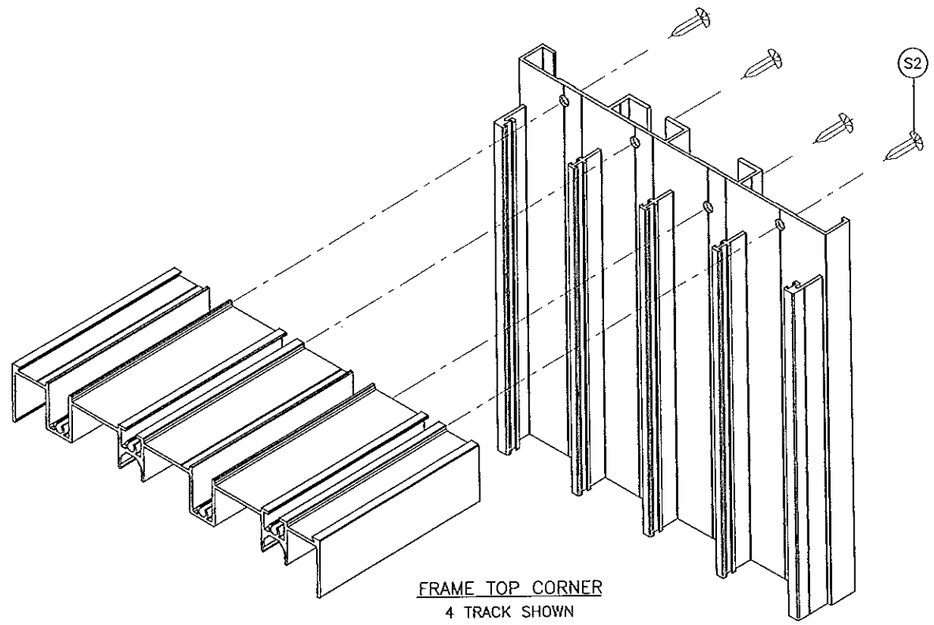

FRAME TOP CORNER
4 TRACK SHOWN

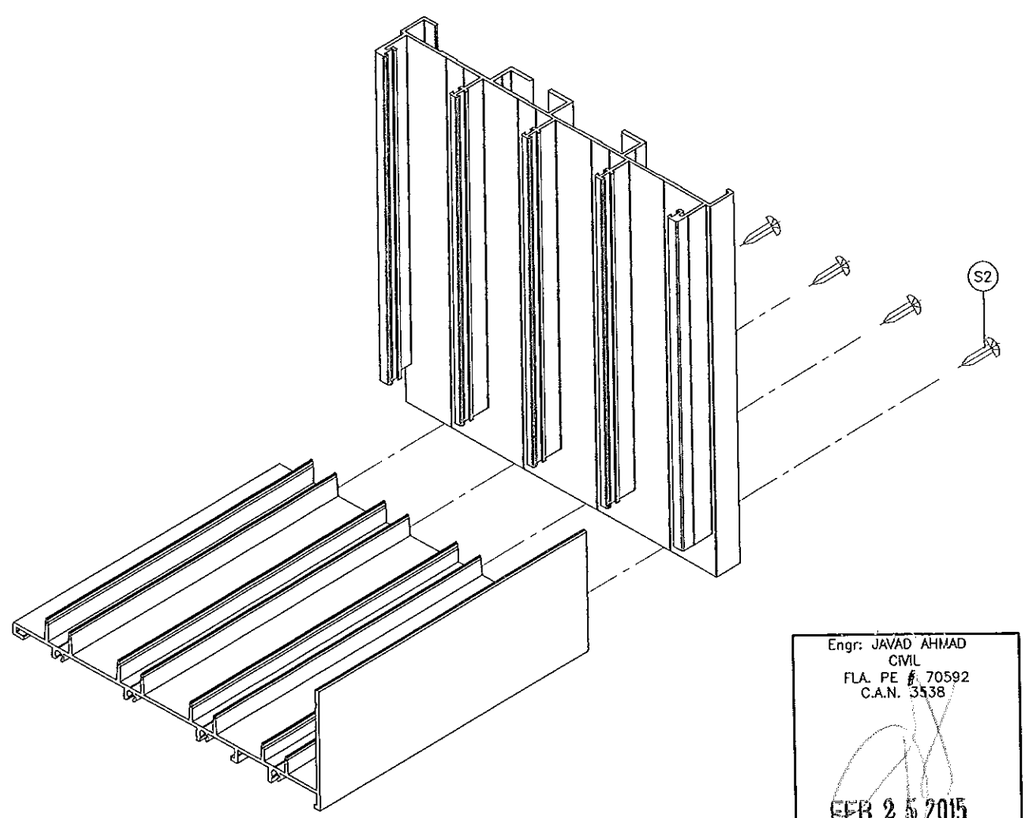

FRAME BOTTOM CORNER
4 TRACK SHOWN

PRODUCT REVISED
as complying with the Florida
Building Code
Acceptance No. 14-0627.15
Expiration Date 9/23/20
By
Miami Dade Product Control

Engr: JAVAD AHMAD
CIVIL
FLA. PE # 70592
C.A.N. 3538
FEB 25 2015

AL-FAROOQ CORPORATION
ENGINEERS & PRODUCT DEVELOPMENT
1235 S.W. 87 AVE
MIAMI, FLORIDA 33174
TEL. (305) 264-8100 FAX. (305) 262-6978
COMP-ANL\W10-31CGI

SERIES SENTINEL 150 ALUM SLIDING GLASS DOOR (L.M.I.)

CGI WINDOWS & DOORS
10100 N.W. 25TH STREET
MIAMI, FL. 33172
TEL. (305) 593-6590 FAX. (305) 593-6592

revisions:

no	date	by	description
H	01.16.14		NO CHANGE THIS SHEET
I	06.09.14		GENERAL REVISION
J	11.12.14		NO CHANGE THIS SHEET
K	02.03.15		NO CHANGE THIS SHEET

date: 05-20-10
scale: 3/8" = 1"
dr. by:
chk. by:

drawing no.
W10-31

sheet 15.1 of 16

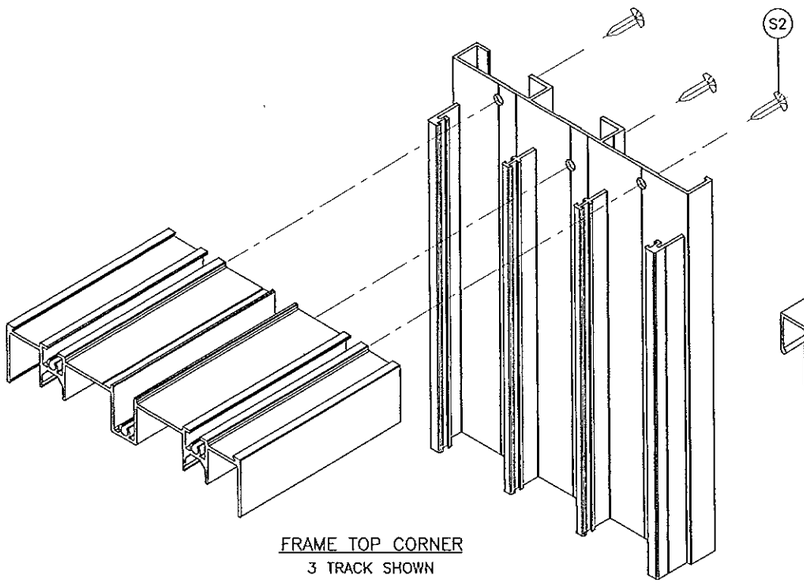

FRAME TOP CORNER
3 TRACK SHOWN

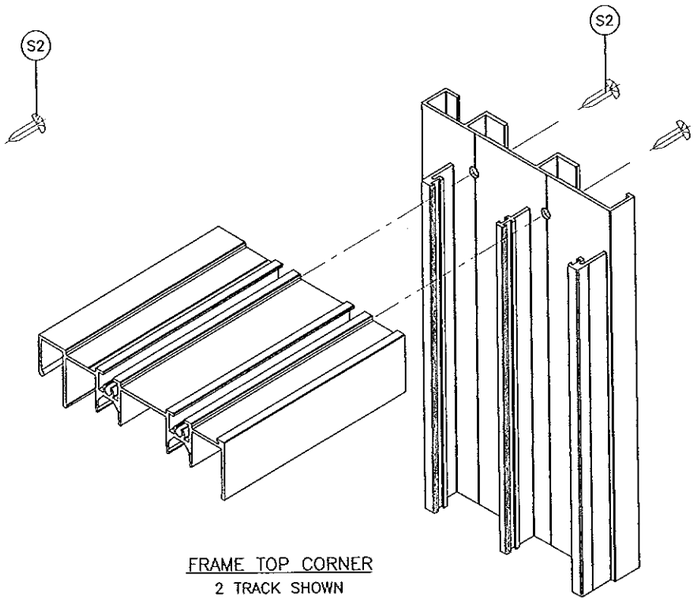

FRAME TOP CORNER
2 TRACK SHOWN

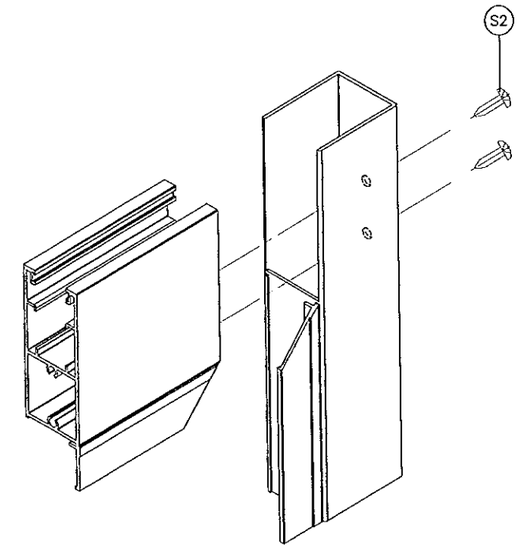

PANEL TOP/BOTTOM CORNER
MITERED BEAD CORNER (TYPICAL)

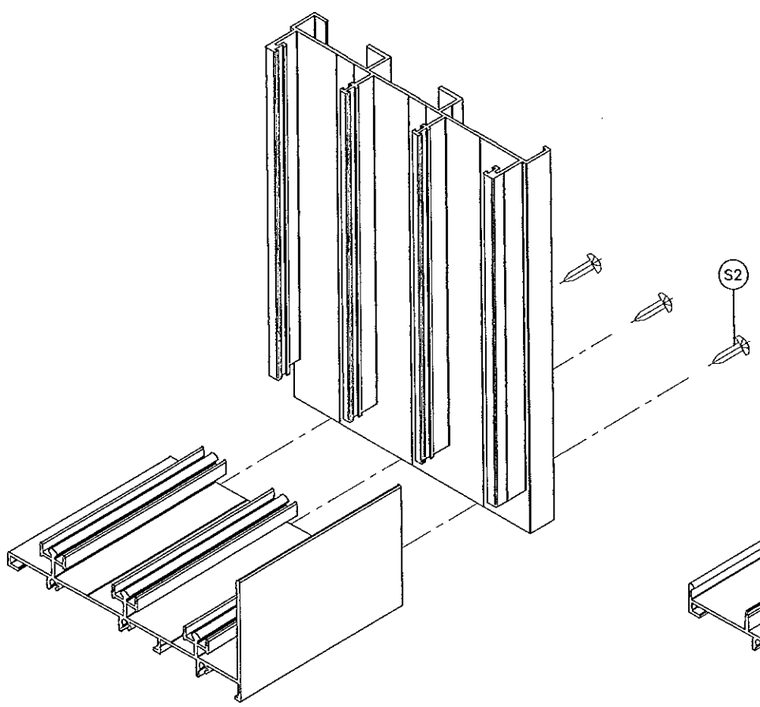

FRAME BOTTOM CORNER
3 TRACK SHOWN

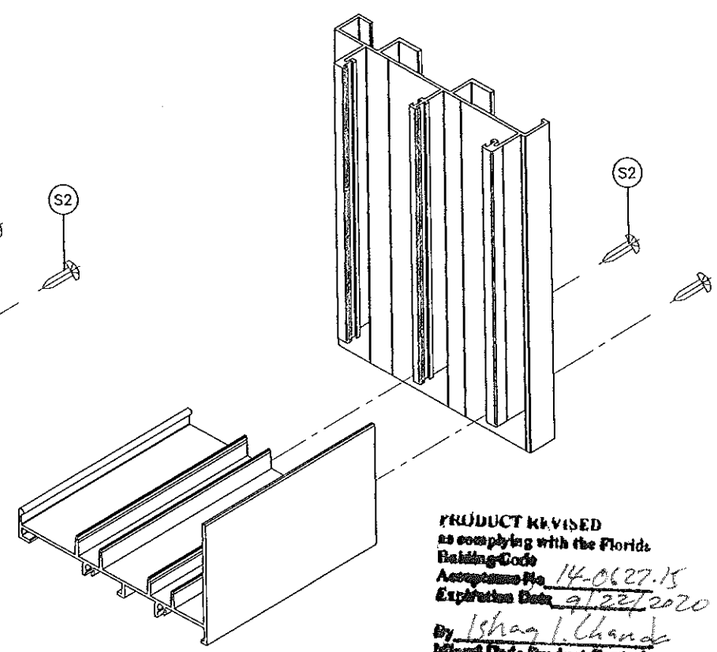

FRAME BOTTOM CORNER
2 TRACK SHOWN

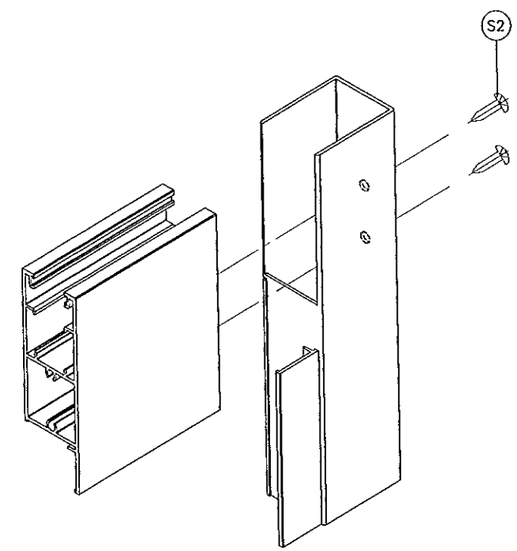

PANEL TOP/BOTTOM CORNER
SQUARE BEAD CORNER (OPTIONAL)

PRODUCT REVISED
as complying with the Florida
Building Code
Acceptance No. 14-0627.15
Expiration Date 9/22/2020
By Ishaq Chand
Miami Dade Product Control

Engr: JAVAD AHMAD
CIVIL
FLA. PE # 70592
C.A.N. 3538

FEB 25 2015

AL-FAROOQ CORPORATION
ENGINEERS & PRODUCT DEVELOPMENT
1235 S.W. 87 AVE
MIAMI, FLORIDA 33174
TEL. (305) 264-8100 FAX. (305) 262-6978

COMP-ANL\W10-31CGI

SERIES SENTINEL 150 ALUM SLIDING GLASS DOOR (L.M.I.)

CGI WINDOWS & DOORS
10100 N.W. 25TH STREET
MIAMI, FL. 33172
TEL. (305) 593-6590 FAX. (305) 593-6592

revisions:

no	date	by	description
H	01.16.14		NO CHANGE THIS SHEET
I	06.09.14		GENERAL REVISION
J	11.12.14		NO CHANGE THIS SHEET
K	02.03.15		NO CHANGE THIS SHEET

date: 05-20-10
scale: 3/8" = 1"
dr. by:
chk. by:

drawing no.
W10-31

sheet 16 of 16