MIAMI-DADE COUNTY
PRODUCT CONTROL SECTION
11805 SW 26 Street, Room 208
Miami, Florida 33175-2474
T (786) 315-2590 F (786) 315-2599
www.miamidade.gov/economy

DEPARTMENT OF REGULATORY AND ECONOMIC RESOURCES (RER)
BOARD AND CODE ADMINISTRATION DIVISION

NOTICE OF ACCEPTANCE (NOA)

Harray, LLC dba Architectural Louvers
266 West Mitchell Ave.
Cincinnati, OH 45232

SCOPE:

This NOA is being issued under the applicable rules and regulations governing the use of construction materials. The documentation submitted has been reviewed and accepted by Miami-Dade County RER-Product Control Section to be used in Miami Dade County and other areas where allowed by the Authority Having Jurisdiction (AHJ).

This NOA shall not be valid after the expiration date stated below. The Miami-Dade County Product Control Section (In Miami Dade County) and/or the AHJ (in areas other than Miami Dade County) reserve the right to have this product or material tested for quality assurance purposes. If this product or material fails to perform in the accepted manner, the manufacturer will incur the expense of such testing and the AHJ may immediately revoke, modify, or suspend the use of such product or material within their jurisdiction. RER reserves the right to revoke this acceptance, if it is determined by Miami-Dade County Product Control Section that this product or material fails to meet the requirements of the applicable building code.

This product is approved as described herein, and has been designed to comply with the Florida Building Code, including the High Velocity Hurricane Zone.

DESCRIPTION: Models E6JF/E6WF/V6JF Aluminum Louvers

APPROVAL DOCUMENT: Drawing No. **14-100**, titled "E6JF/E6WF/V6JF Aluminum Louvers", sheets 1 through 13 of 13, dated 05/26/2014, prepared by ENGCO Inc., signed and sealed by Pedro M. De Figueiredo, P.E., bearing the Miami-Dade County Product Control revision stamp with the Notice of Acceptance number and expiration date by the Miami-Dade County Product Control Section.

MISSILE IMPACT RATING: Large and Small Missile Impact Resistant

LABELING: Each unit shall bear a permanent label with the manufacturer's name or logo, city, state, model/series, and following statement: "Miami-Dade County Product Control Approved", unless otherwise noted herein.

RENEWAL of this NOA shall be considered after a renewal application has been filed and there has been no change in the applicable building code negatively affecting the performance of this product.

TERMINATION of this NOA will occur after the expiration date or if there has been a revision or change in the materials, use, and/or manufacture of the product or process. Misuse of this NOA as an endorsement of any product, for sales, advertising or any other purposes shall automatically terminate this NOA. Failure to comply with any section of this NOA shall be cause for termination and removal of NOA.

ADVERTISEMENT: The NOA number preceded by the words Miami-Dade County, Florida, and followed by the expiration date may be displayed in advertising literature. If any portion of the NOA is displayed, then it shall be done in its entirety.

INSPECTION: A copy of this entire NOA shall be provided to the user by the manufacturer or its distributors and shall be available for inspection at the job site at the request of the Building Official.

This NOA **revises NOA # 13-0529.25** and consists of this page 1 and evidence page E-1, as well as approval document mentioned above.

The submitted documentation was reviewed by **Carlos M. Utrera, P.E.**

MIAMI-DADE COUNTY APPROVED

01/14/2015

NOTICE OF ACCEPTANCE: EVIDENCE SUBMITTED

A. DRAWINGS

1. Drawing No. **14-100**, titled "E6JF/E6WF/V6JF Aluminum Louvers", sheets 1 through 13 of 13, dated 05/26/2014, prepared by ENGCO Inc., signed and sealed by Pedro M. De Figueiredo, P.E.

B. TESTS *"Submitted under NOA # 13-0529.25"*

1. Test reports on 1) Uniform Static Air Pressure Test, Loading per FBC TAS 202-94
   2) Large Missile Impact Test per FBC, TAS 201-94
   3) Cyclic Wind Pressure Loading per FBC, TAS 203-94

   along with marked-up drawings and installation diagram of Models E6JF and V6JF Aluminum Louvers, prepared by Architectural Testing, Inc., Test Report No. **B3859.01-450-18**, dated 08/15/2012, signed and sealed by Vinu J. Abraham, P.E.
2. Test reports on Uniform Static Air Pressure Test, Loading per FBC TAS 202-94 of a Model E6JF Aluminum Louver, prepared by Architectural Testing, Inc., Test Report No. **B3859.02-450-18**, dated 01/29/2013, signed and sealed by Vinu J. Abraham, P.E.

C. CALCULATIONS

1. Anchoring calculations prepared by ENGCO Inc., dated 05/19/2014, signed and sealed by Pedro M. De Figueiredo, P.E.

   "Submitted under NOA # 13-0529.25"
2. Product evaluation prepared by ENGCO Inc., dated 08/30/2012, signed and sealed by Pedro M. De Figueiredo, P.E.

D. QUALITY ASSURANCE

1. Miami-Dade Department of Regulatory and Economic Resources (RER)

E. MATERIAL CERTIFICATIONS

1. None.

F. STATEMENTS

1. Statement letter of code conformance to 2010 and 5th edition (2014) FBC and no financial interest issued by ENGCO Inc., dated 05/19/2014, signed and sealed by Pedro M. De Figueiredo, P.E.

01/14/2015

Carlos M. Utrera, P.E.
Product Control Examiner
NOA No. 14-0708.06
Expiration Date: October 31, 2018
Approval Date: January 22, 2015

ARCHITECTURAL ·O·U·V·E·R·S

LOUVER MODELS: E6JF - E6WF - V6JF
LARGE MISSILE IMPACT RESISTANT RATED

GENERAL NOTES:

FLORIDA BUILDING CODE 2010/ 2014 (5th edition) HVHZ & NON HVHZ
LARGE MISSILE IMPACT RATED

1- CODE: THIS PRODUCT HAS BEEN TESTED UNDER TAS 201 (LARGE MISSILE), 202 AND 203 AND DESIGNED IN ACCORDANCE WITH THE FBC 2010/ 2014 INCLUDING THE HIGH VELOCITY HURRICANE ZONE (HVHZ).

2- DEFINITION: THIS PRODUCT IS AN ALUMINUM IMPACT RESISTANT LOUVER DESIGNED, CONSTRUCTED AND TESTED FOR THE PURPOSE OF PROVIDING PROTECTION FROM HURRICANE FORCE WINDS AND WIND BORNE DEBRIS (LARGE MISSILE) WITHIN THE ALLOWABLE DESIGNED PRESSURES AND LIMITATIONS STATED IN THIS APPROVAL.

3- LABELING:

"ARCHITECTURAL LOUVERS - CINCINNATI - OHIO
SERIES E6JF, E6WF AND V6JF ALUMINUM LOUVERS
LARGE MISSILE IMPACT RATED
MIAMI-DADE PRODUCT CONTROL APPROVED

4- LOADS: DESIGNED LOAD CALCULATED BASED ON THE ASCE 7-10 AND PROVIDED BY A PROFESSIONAL ARCHITECT OR ENGINEER FOR EACH SPECIFIC PROJECT. THE CALCULATED DESIGNED PRESSURE MUST NOT EXCEED THE ALLOWABLE PRESSURES HERE IN SPECIFIED. THE DESIGN PRESSURES, AS DETERMINED FROM ASCE 7-10, ARE TO BE MULTIPLE BY 0.6

5- MATERIAL: ALL ALUMINUM PARTS TO BE 6063-T5 ALLOY OR AS NOTED ON THIS APPROVAL.

6- FASTENERS: ASSEMBLY SCREWS AND ANCHORS SHALL BE AS SPECIFIED IN THE CURRENT SET OF DRAWINGS. INSTALLATION AND LOADS AS PER THIS APPROVAL.

7- USE: IT SHALL BE THE RESPONSIBILITY OF THE CONTRACTOR, ARCHITECT OR ENGINEER OF RECORD TO VERIFY THE FOLLOWING:

7.1- THE STABILITY OF THE STRUCTURE WHERE THE PRODUCT IS TO BE ATTACHED ENSURING PROPER ANCHORAGE.

7.2- THE SITE SPECIFIC PROJECT CRITERIA, SUCH AS BUT NOT LIMITED TO, LOCAL CODE REQUIREMENTS, DESIGNED PRESSURES ETC.

7.3- THAT THIS APPROVAL IS ADEQUATE FOR A SPECIFIC PROJECT.

8- DISSIMILAR MATERIALS: WHERE ALUMINUM IS IN CONTACT OR FASTENED TO DISSIMILAR MATERIALS, INCLUDING BUT NOT LIMITED TO STEEL, INSTALLATION SHALL MEET THE REQUIREMENTS OF CHAPTER M.7 OF THE ALUMINUM DESIGN MANUAL 2010.

9- BLADE CAN BE INSTALLED UPSIDE DOWN FOR THE PURPOSE OF SIGHT BLOCKING .

10- THIS LOUVER SYSTEM HAS NOT BEEN TESTED FOR WATER INFILTRATION RESISTANCE AND IS NOT CLASSIFIED AS WATER RESISTANT UNDER THIS APPROVAL. THEREFORE, THE LOUVER IS TO BE INSTALLED IN A LOCATION WHERE THE ROOM BEHIND THE LOUVER IS DESIGNED TO DRAIN ANY PENETRATING WATER. THE ROOM SHALL HOUSE EQUIPMENT, COMPONENTS AND SUPPLIES THAT ARE WATER RESISTANT OR WATER PROOF.

11- MULLIONS MAY BE USED TO MAKE HORIZONTAL ASSEMBLIES TO AN UNLIMITED WIDTH DIMENSION. SECTION SPLITS MAY BE USED TO MAKE VERTICAL ASSEMBLIES TO AN UNLIMITED HEIGHT DIMENSION. COMBINATIONS OF VERTICAL MULLIONS AND HORIZONTAL SECTION SPLITS MAY OCCUR, PROVIDED A STRUCTURAL SUPPORT (BY OTHERS) IS INSTALLED TO SUPPORT ALL LOADS TRANSFERRED FROM THE LOUVER ASSEMBLY.

12- UNITS: ALL UNITS ARE IN INCHES (IN) AND PRESSURES IN POUND PER SQUARE FEET (PSF)

TABLE OF CONTENTS:

SHEET	CONTENT DESCRIPTION
1	GENERAL NOTES, TABLE OF CONTENTS AND SHAPE OPTIONS
2	SINGLE LOUVERS W/ & W/O STIFFENERS - TABLE 1 AND TABLE 1.1: DESIGNED PRESSURES
3	MULTIPLE VERTICALLY STACKED LOUVERS W/ STIFFENERS AND SECTION SPLIT - TABLE 2: DESIGNED PRESSURES
4	MULTIPLE HORIZONTAL LOUVERS W/O STIFFENERS AND SUPPORTED BY MULLIONS - TABLE 3: DESIGNED PRESSURES
5	MULTIPLE HORIZONTAL LOUVERS W/ STIFFENERS AND SUPPORTED BY MULLIONS - TABLE 4: DESIGNED PRESSURES
6	SECTION DETAILS
7	BLADE STIFFENER AND SECTION SPLIT DETAILS & ASSEMBLY
8	MULLIONS SECTION DETAILS, MULLIONS CONNECTION INSET MOUNT - TABLE 3A
9	JAMB MULLION CONNECTION INSET MOUNT DETAILS - TABLE 3AJ
10	5.5, 5A MULLIONS CONNECTION BUILT-OUT MOUNT
11	JAMB, RHLH MULLIONS CONNECTION BUILT-OUT MOUNT
12	LOUVER MANUFACTURER COMPONENTS
13	BILL OF MATERIALS AND OPTIONAL WDR BLADE RACK ASSEMBLY

SHAPE OPTIONS

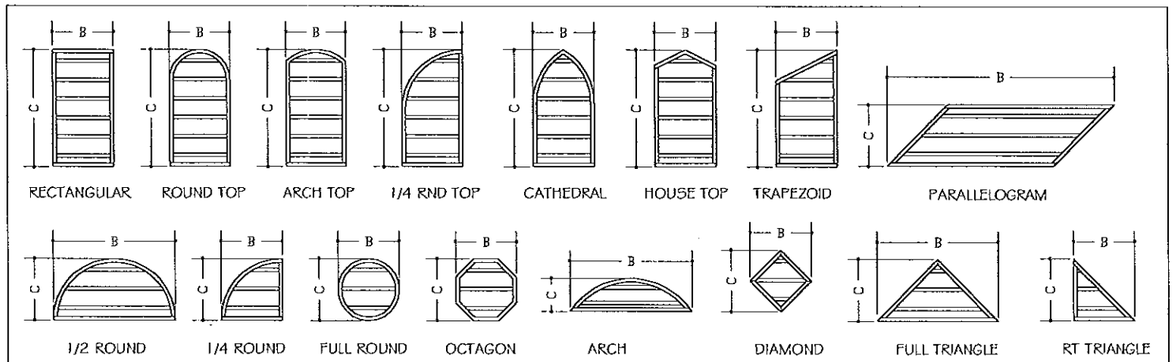

NOTES:
1. OTHER SHAPES ARE ACCEPTABLE, PROVIDED THEY ARE SIMILAR TO THOSE SHOWN AND HAVE CORNER CONNECTIONS AS SHOWN IN THE APPLICABLE DETAILS.
2. ALL SHAPED PANELS ARE RESTRICTED TO THE SAME PANEL WIDTHS, HEIGHTS AND PRESSURES AS RECTANGULAR PANELS.
3. STANDARD CONSTRUCTION, MECHANICALLY ASSEMBLED BLADES AND FRAMING, SHALL APPLY TO ALL RECTANGULAR PORTIONS OF THE LOUVER PANELS.
4. WELDED CONSTRUCTION, SHALL APPLY TO ALL NON RECTANGULAR PORTIONS OF THE LOUVER PANELS.
5. ANCHORAGE SPACING IS RESTRICTED TO THE MAXIMUM SPACING TESTED AND PRESENTED HERE IN
6- ALLOWABLE SHAPES OPTIONS ARE APPLICABLE FOR LOUVERS W/ OR W/O STIFFENERS AND FOR SINGLE OR MULTIPLE PANEL CONFIGURATIONS.

MANUFACTURER:

HARRAY, LLC, dba
ARCHITECTURAL ·O·U·V·E·R·S

266 W. MITCHELL AVE.
CINCINNATI, OHIO 45232
PH: (888) 568-8371
FX: (888) 568-8370

PRODUCT:

E6JF / E6WF / V6JF
ALUMINUM LOUVERS
LARGE MISSILE IMPACT LEVEL

ENGINEERING:

ENGCO INC. CA 8116
5595 ORANGE DR. 201
DAVIE, FL. 33314
Tel.: (954) 585-0304
WWW.ENGCOINC.COM

PEDRO M. DE FIGUEIREDO
LICENSE
No. 52609
STATE OF FLORIDA
PROFESSIONAL ENGINEER

MAY 28 2014

Engineer Seal
Pedro De Figueiredo - PE 52609

MIAMI-DADE BCCO:

PRODUCT REVISED
as complying with the Florida Building Code
Acceptance No 14-0708.06
Expiration Date 10/31/2018
By _____
Miami Dade Product Control

DATE: 05/26/2014
SCALE: NA
DESIGN BY: PPMF

DRAWING #: 14-100

SINGLE LOUVERS WITH AND WITHOUT STIFFENERS

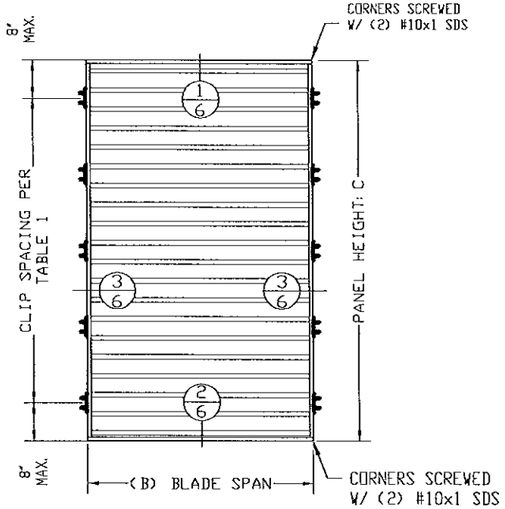

RECTANGULAR UNIT

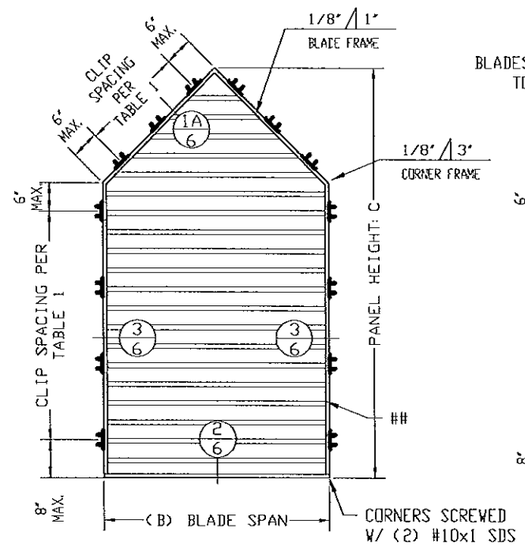

HOUSE TOP UNIT

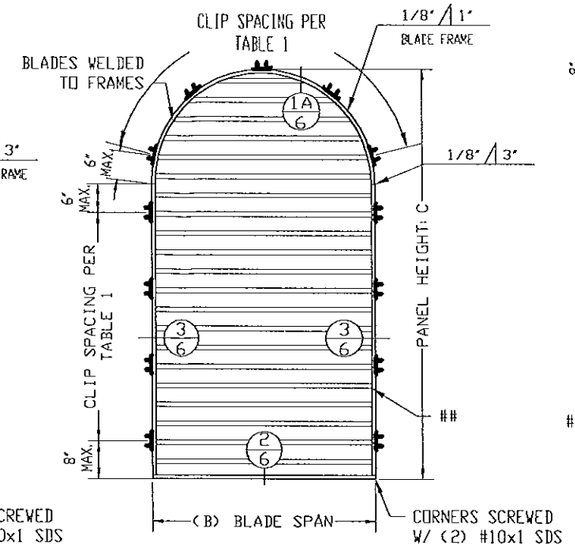

ROUND TOP UNIT

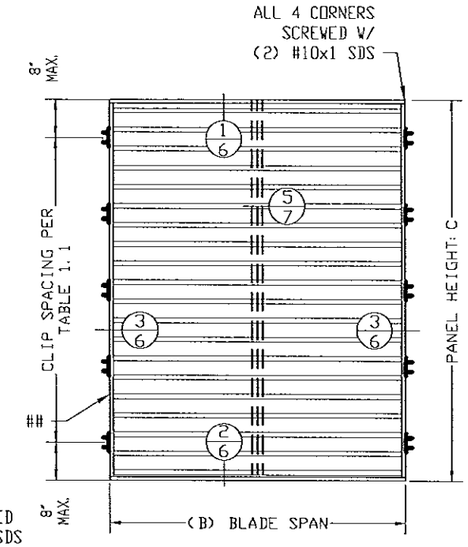

RECTANGULAR UNIT
W/ STIFFENER

- LOUVER BLADE ATTACHED TO JAMBS USING (2)#10X1 SDS
APPLICABLE FOR ALL BLADES INSTALLED PERPENDICULAR TO FRAME

TABLE 1:
BLADE W/OUT STIFFENER
BLADE SPAN X DESIGNED PRESSURE

B IN	C IN	PRESSURE ± PSF	CLIP SPACING (**)	(***)	(****)
30	*	150	13	15	16
	*	123	16	16	16
36	*	150	11	13	16
	*	103	16	16	16
42	*	150	9	11	16
	*	88	16	16	16
48	*	150	8	10	16
	*	77	16	16	16
54	*	123	9	10	16
	*	68	16	16	16
60	*	100	10	12	16
	*	61	16	16	16

NOTES:
1- (B) BLADE SPAN IN INCHES
2- (C) PANEL HEIGHT
3- (*) UNLIMITED PANEL HEIGHT IN INCHES
4- BLADES TO BE WELDED TO JAMBS IN ARCH OR SLOPED SECTIONS
5- HEADER OR SILL ANCHORAGE IS REQUIRED AT ARCH OR SLOPED SECTION
6- (**) ANCHOR TYPE A, A1, B, B1 OR C WITH MAX. 1/2" SHIM
7- (***) ANCHOR TYPE A1 WITH MAX. 1/4" SHIM
8- (****) ANCHOR TYPE A, B, B1 OR C WITH MAX. 1/4" SHIM

TABLE 1.1:
BLADE W/ STIFFENER
BLADE SPAN X DESIGNED PRESSURE

B IN	C IN	PRESSURE ± PSF	CLIP SPACING (**)	(***)	(****)
60	60	150	6	8	16
		111	9	10	16
		60	16	16	16
72	60	150	5	6	13
		125	6	8	16
		93	9	10	16
84	60	150	5	6	11
		107	6	8	16
		79	9	11	16
96	60	150	4	5	10
		94	6	8	16
		69	9	11	16

NOTES:
1- (B) BLADE SPAN IN INCHES
2- (C) PANEL HEIGHT LIMITED TO 60"
3- BLADES TO BE WELDED TO JAMBS IN ARCH OR SLOPED SECTIONS
4- HEADER OR SILL ANCHORAGE IS REQUIRED AT ARCH OR SLOPED SECTION
5- (**) ANCHOR TYPE A, A1, B, B1 OR C WITH MAX. 1/2" SHIM
6- (***) ANCHOR TYPE A1 WITH MAX. 1/4" SHIM
7- (****) ANCHOR TYPE A, B, B1 OR C WITH MAX. 1/4" SHIM

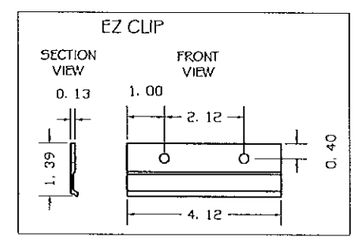

ANCHORS:

TYPE	DESCRIPTION	SUBSTRATE	ED (MIN)	EMBED (MIN)
A	1/4" TAPCONS BY ITW	CONCRETE	2 1/2	1 3/4
A1	1/4" TAPCONS BY ITW	MASONRY	2 1/2	1 1/4
B	1/4" TAPCONS BY ITW	WOOD	1	1 1/2
B1	#14 SMS GRADE 5	WOOD	1	1 1/2
C	1/4-14 GR 5 SDS	METAL	1/2	1/8

ANCHORAGE NOTES:
1- EMBED.- EMBEDMENT IS TO BE TAKEN BEYOND ANY WALL DRESSING
2- ED- EDGE DISTANCE IS TO BE MEASURED BEYOND THE WALL DRESSING
3- METAL STRUCTURE TO BE AT LEAST 6063-T5 ALUMINUM ALLOY OR ASTM A36 STEEL
4- METAL STRUCTURE TO HAVE A MINIMUM 1/8" WALL THICKNESS
5- CONCRETE WITH A MINIMUM fc>=3000 PSI
6- MASONRY TO CONFORM TO ASTM C90
7- ANCHOR TYPE C CAN BE REPLACED BY 1/4-20 HHMS WITH 1/4" NUTS
8- WOOD SUBSTRATE WITH SG>=0.55
9- 1/4" ULTRACONS BY ELCO CAN BE USED AS ALTERNATE TO A AND A1 TYPE ANCHORS

MANUFACTURER:

HARRAY, LLC, dba
ARCHITECTURAL LOUVERS

266 W. MITCHELL AVE.
CINCINNATI, OHIO 45232
PH: (888) 568-8371
FX: (888) 568-8370

PRODUCT:

E6JF / E6WF / V6JF
ALUMINUM LOUVERS
LARGE MISSILE IMPACT LEVEL

ENGINEERING:
ENGCO INC. CA 8116
5595 ORANGE DR. 201
DAVIE, FL. 33314
Tel.: (954) 585-0304
WWW.ENGCOINC.COM

PEDRO M. DE FIGUEIREDO
LICENSE No. 52609
STATE OF FLORIDA
PROFESSIONAL ENGINEER

MAY 28 2014

Engineer Seal
Pedro De Figueiredo - PE 52609

MIAMI-DADE BCCO:

PRODUCT REVIEWED
as complying with the Florida Building Code
Acceptance No 14009.06
Expiration Date 10/31/2018
By
Miami Dade Product Control

DATE: 05/26/2014
SCALE: NA
DESIGN BY: PPMF

DRAWING #: 14-100

MULTIPLE VERTICALLY STACKED LOUVERS WITH SECTION SPLIT AND STIFFENER

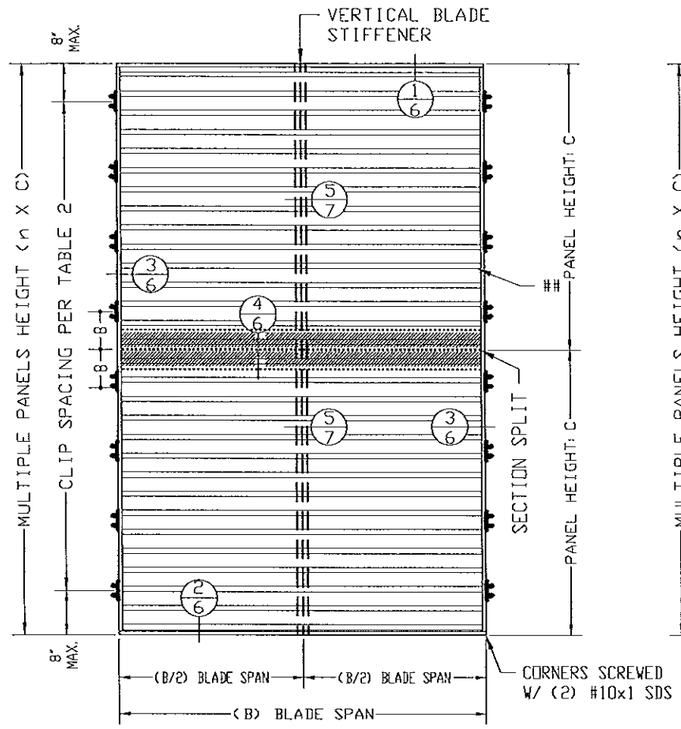

RECTANGULAR UNIT

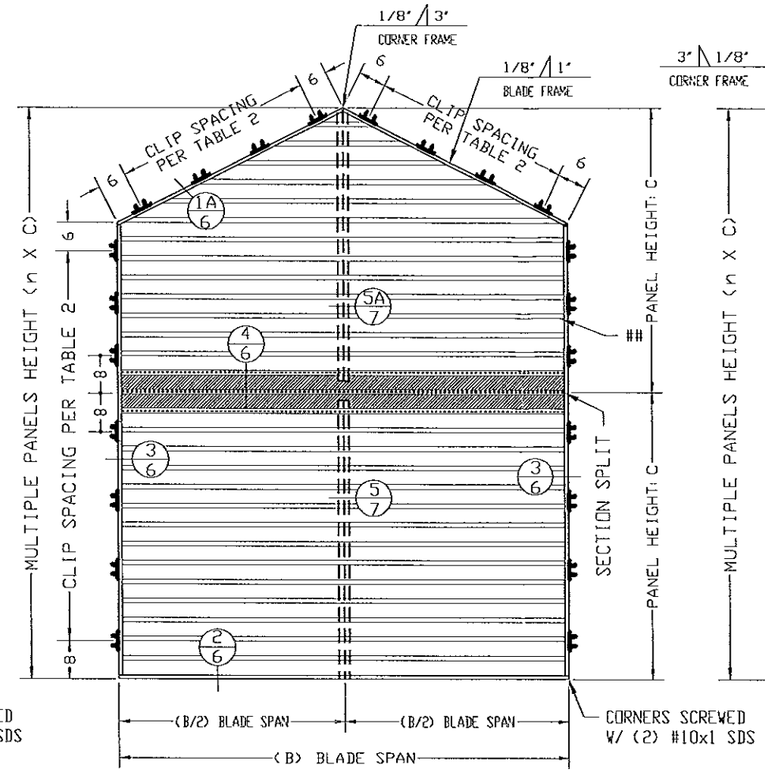

HOUSE TOP UNIT

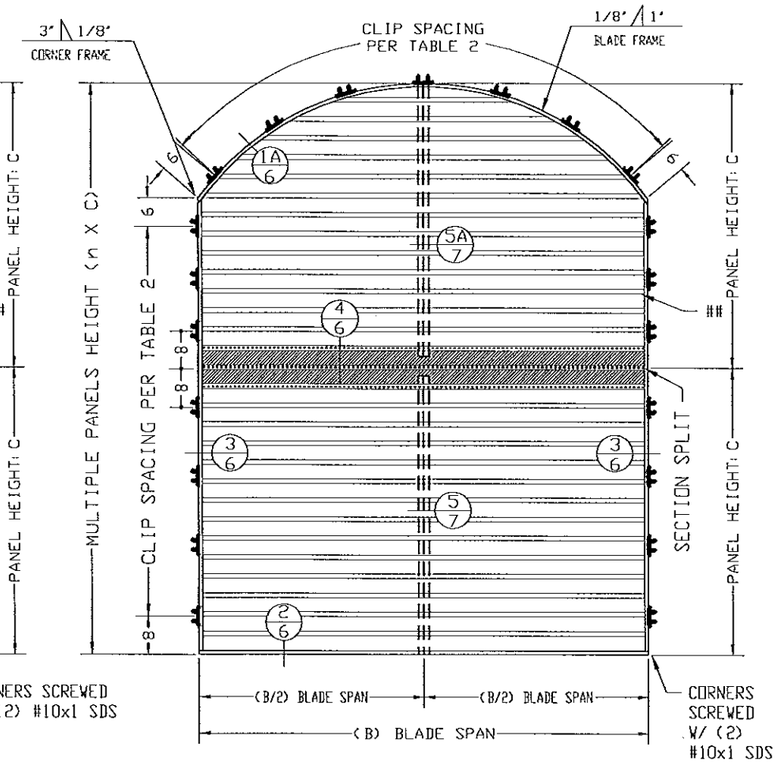

ROUND TOP UNIT

- LOUVER BLADE ATTACHED TO JAMBS USING (2)#10X1 SDS
APPLICABLE FOR ALL BLADES INSTALLED PERPENDICULAR TO FRAME

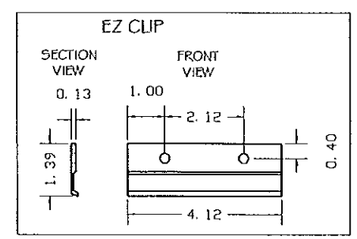

TABLE 2:
BLADE W/ STIFFENER AND W/ SECTION SPLIT
BLADE SPAN X HEIGHT X DESIGNED PRESSURE

B IN	C IN	PRESSURE ± PSF	CLIP SPACING (**)	(***)	(****)
60	60	150	6	8	16
72	60	150	5	6	13
84	60	150	5	6	11
96	60	150	4	5	10

NOTES:
1- (B) BLADE SPAN IN INCHES
2- (C) PANEL HEIGHT
3- BLADES TO BE WELDED TO JAMBS IN ARCH OR SLOPED SECTIONS
4- HEADER OR SILL ANCHORAGE IS REQUIRED AT ARCH OR SLOPED SECTION
5- (**) ANCHOR TYPE A, A1, B, B1 OR C WITH MAX. 1/2" SHIM
6- (***) ANCHOR TYPE A1 WITH MAX. 1/4" SHIM
7- (****) ANCHOR TYPE A, B, B1 OR C WITH MAX. 1/4" SHIM

ANCHORS:

TYPE	DESCRIPTION	SUBSTRATE	ED (MIN)	EMBED (MIN)
A	1/4" TAPCONS BY ITW	CONCRETE	2 1/2	1 3/4
A1	1/4" TAPCONS BY ITW	MASONRY	2 1/2	1 1/4
B	1/4" TAPCONS BY ITW	WOOD	1	1 1/2
B1	#14 SMS GRADE 5	WOOD	1	1 1/2
C	1/4-14 GR 5 SDS	METAL	1/2	1/8

ANCHORAGE NOTES:
1- EMBED.- EMBEDMENT IS TO BE TAKEN BEYOND ANY WALL DRESSING
2- ED- EDGE DISTANCE IS TO BE MEASURED BEYOND THE WALL DRESSING
3- METAL STRUCTURE TO BE AT LEAST 6063-T5 ALUMINUM ALLOY OR ASTM A36 STEEL
4- METAL STRUCTURE TO HAVE A MINIMUM 1/8" WALL THICKNESS
5- CONCRETE WITH A MINIMUM f'c>=3000 PSI
6- MASONRY TO CONFORM TO ASTM C90
7- ANCHOR TYPE C CAN BE REPLACED BY 1/4-20 HHMS WITH 1/4" NUTS
8- WOOD SUBSTRATE WITH SG>=0.55
9- 1/4" ULTRACONS BY ELCO CAN BE USED AS ALTERNATE TO A AND A1 TYPE ANCHORS

MANUFACTURER:

HARRAY, LLC, dba
ARCHITECTURAL LOUVERS

266 W. MITCHELL AVE.
CINCINNATI, OHIO 45232
PH: (888) 568-8371
FX: (888) 568-8370

PRODUCT:

E6JF / E6WF / V6JF
ALUMINUM LOUVERS
LARGE MISSILE IMPACT LEVEL

ENGINEERING:
ENGCO INC. CA 8116
5595 ORANGE DR. 201
DAVIE, FL. 33314
Tel.: (954) 585-0304
WWW.ENGCOINC.COM

PEDRO M. DE FIGUEIREDO
LICENSE No. 52609
STATE OF FLORIDA
PROFESSIONAL ENGINEER

MAY 28 2014

Engineer Seal
Pedro De Figueiredo - PE 52609

MIAMI-DADE BCCO:

PRODUCT REVISED
as complying with the Florida Building Code
Acceptance No 14-0708.06
Expiration Date 10/31/2018
By
Miami Dade Product Control

DATE: 05/26/2014
SCALE: NA
DESIGN BY: PPMF

MULTIPLE HORIZONTAL LOUVERS W/O STIFFENERS AND SUPPORTED BY MULLIONS

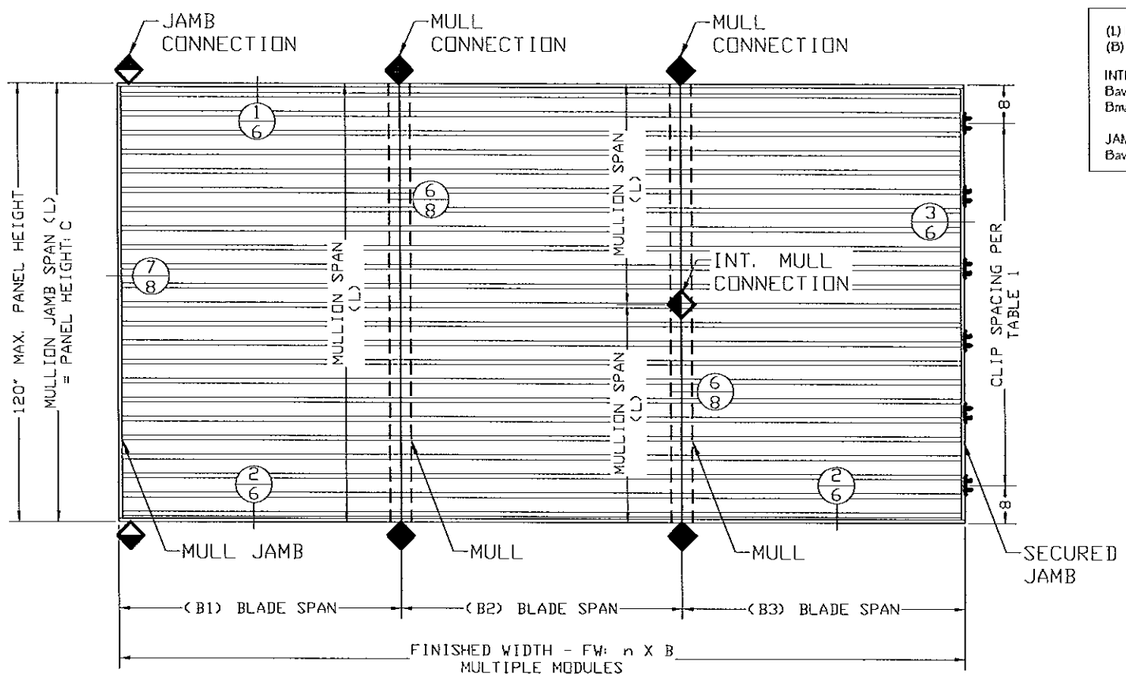

(1) MULLION SPAN
(B) CALCULATED AS FOLLOW:

INTERMEDIATE MULL
Bavg=(B1+B2)/2 OR (B2+B3)/2
Bmax= MAXIMUM OF (B1, B2, B3)

JAMB MULL
Bavg= B1=B3

SEE SHEETS 8, 9, 10 AND 11 FOR MULLION AND JAMB CONNECTION

TABLE 3:
BLADE W/O STIFFENER AND WITH MULLIONS
BLADE SPAN X MULL HEIGHT X DESIGNED PRESSURE

Bavg IN	L IN	PRESSURE (PSF) 5.5 Z	5A	JAMB
30	72	150	150	150
	84	150	150	150
	96	150	150	150
	108	150	150	106
	120	150	150	78
42	72	150	150	150
	84	150	150	150
	96	150	150	108
	108	150	133	76
	120	143	120	55
48	72	150	150	150
	84	150	150	141
	96	150	131	95
	108	139	117	66
	120	125	105	48
54	72	123	123	123
	84	123	123	123
	96	123	117	84
	108	123	104	59
	120	111	93	43
60	72	100	100	100
	84	100	100	100
	96	100	100	76
	108	100	93	53
	120	100	84	39

Bavg IN	L IN	PRESSURE (PSF) RHLH
30	36	150
	48	129
	60	103
	72	72
	84	53
42	24	150
	36	123
	48	92
	60	74
	72	51
48	24	150
	36	108
	48	81
	60	65
	72	45
54	24	123
	36	96
	48	72
	60	57
	72	40
60	24	100
	36	86
	48	65
	60	52
	72	36

RECTANGULAR UNIT WITH BLADE SPAN W/OUT STIFFENER

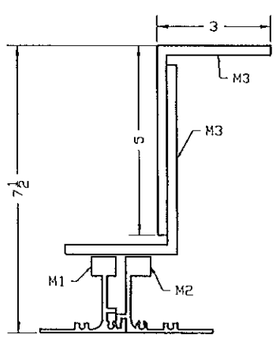

5.5Z MULLION
ALLOY: 6063-T5
PROPERTIES:
Ixx= 34.7 in^4
Sxx= 8.7 in^3

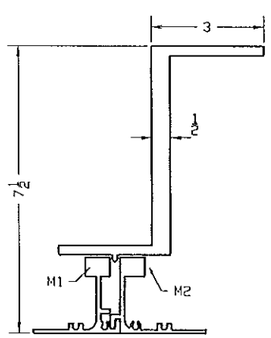

ALTERNATE 1 - 5.5Z MULLION
ALLOY: 6063-T5
PROPERTIES:
Ixx= 35.6 in^4
Sxx= 9.0 in^3

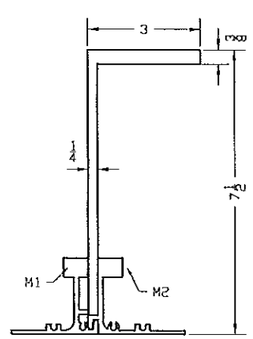

ALTERNATE 2 - 5.5Z MULLION
ALLOY: 6063-T5
PROPERTIES:
Ixx= 35.7 in^4
Sxx= 9.0 in^3

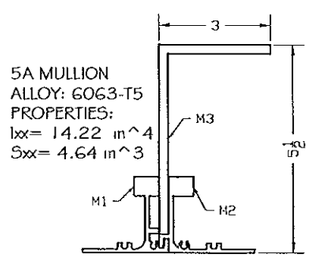

5A MULLION
ALLOY: 6063-T5
PROPERTIES:
Ixx= 14.22 in^4
Sxx= 4.64 in^3

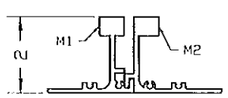

LH RH MULLION
ALLOY: 6063-T5
PROPERTIES:
Ixx= 1.00 in^4
Sxx= 0.89 in^3

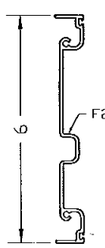

JAMB MULLION
ALLOY: 6063-T5
PROPERTIES:
Ixx= 3.27 in^4
Sxx= 1.1 in^3

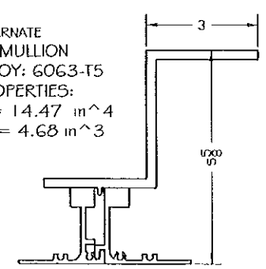

ALTERNATE
5A MULLION
ALLOY: 6063-T5
PROPERTIES:
Ixx= 14.47 in^4
Sxx= 4.68 in^3

EXAMPLE TO VERIFY INSTALLATION CAPACITY:

EXAMPLE 1 - LOUVER WITH 3 EQUAL B= 60" AND (2) 120" MULLIONS
1- DETERMINE WIND PRESSURE AS GENERAL NOTES #4. (Pd±80 PSF)
2- DETERMINE "B" (Bmax=60", Bavg= (60+60)/2=60")
3- BASED ON TABLE 1: Bmax= 60" --- Pda= 100 PSF (BLADE)
4- DETERMINE MULLION SPAN. (L=120")
5- JAMBS SECURED TO SUBSTRATE AT 16"OC - USE TABLE 1 -- Pda= 100 PSF
6- DETERMINE MULLION CAPACITY. (Bavg=60" X L=120") - 5.5Z = 100 PSF, 5A = 84 PSF AND RHLH= NA
7- SEE SHEETS 8, 10 AND 11 FOR MULLION ANCHORAGE
8- PRODUCT RATING MUST BE GREATER OR EQUAL THAN Pd=80 PSF
DESIGNED CONTROLLED BY MULLION -- Pd allowable= 84 PSF - 5A MULL OK

EXAMPLE 2 - LOUVER WITH 3 UNEQUAL B1=60", B2=36", B3=60", AND (2) 72" MULLIONS
1- DETERMINE WIND PRESSURE AS GENERAL NOTES #4. (Pd±45 PSF)
2- DETERMINE "B" (Bmax=60", Bavg= (60+36)/2=48")
3- BASED ON TABLE 1: Bmax= 60" --- Pd= 100 PSF (BLADE)
4- DETERMINE MULLION SPAN. (L=72")
5- DETERMINE JAMB SPAN SECURED AT TOP & BOTTOM. (L=72")
6- DETERMINE MULLION CAPACITY. (Bavg=48 X L=72") - 5.5Z= 150 PSF, 5A= 150 PSF, RHLH= 45 PSF
7- DETERMINE JAMB CAPACITY. (B=60" X L=72") - JAMB= 100 PSF
8- SEE SHEETS 8, 10 AND 11 FOR MULLION ANCHORAGE
9- PRODUCT RATING MUST BE GREATER OR EQUAL THAN Pd=45 PSF
DESIGNED CONTROLLED BY MULLION RHLH -- Pd allowable= 45 PSF - RHLH MULL OK

MANUFACTURER:

HARRAY, LLC, dba
ARCHITECTURAL LOUVERS

266 W. MITCHELL AVE.
CINCINNATI, OHIO 45232
PH: (888) 568-8371
FX: (888) 568-8370

PRODUCT:

E6JF / E6WF / V6JF
ALUMINUM LOUVERS
LARGE MISSILE IMPACT LEVEL

ENGINEERING:
ENGCO INC. CA 8116
5595 ORANGE DR. 201
DAVIE, FL. 33314
Tel.: (954) 585-0304
WWW.ENGCOINC.COM

PEDRO M. DE FIGUEIREDO
LICENSE
No. 52609
STATE OF FLORIDA
PROFESSIONAL ENGINEER

MAY 28 2014
Engineer Seal
Pedro De Figueiredo - PE 52609

MIAMI-DADE BCCO:

PRODUCT REVISED
as complying with the Florida Building Code
Acceptance No 14-0709.06
Expiration Date 10/31/2018
By
Miami/Dade Product Control

DATE: 05/26/2014
SCALE: NA
DESIGN BY: PPMF

MULTIPLES HORIZONTAL LOUVERS W/ STIFFENERS AND SUPPORTED BY MULLIONS

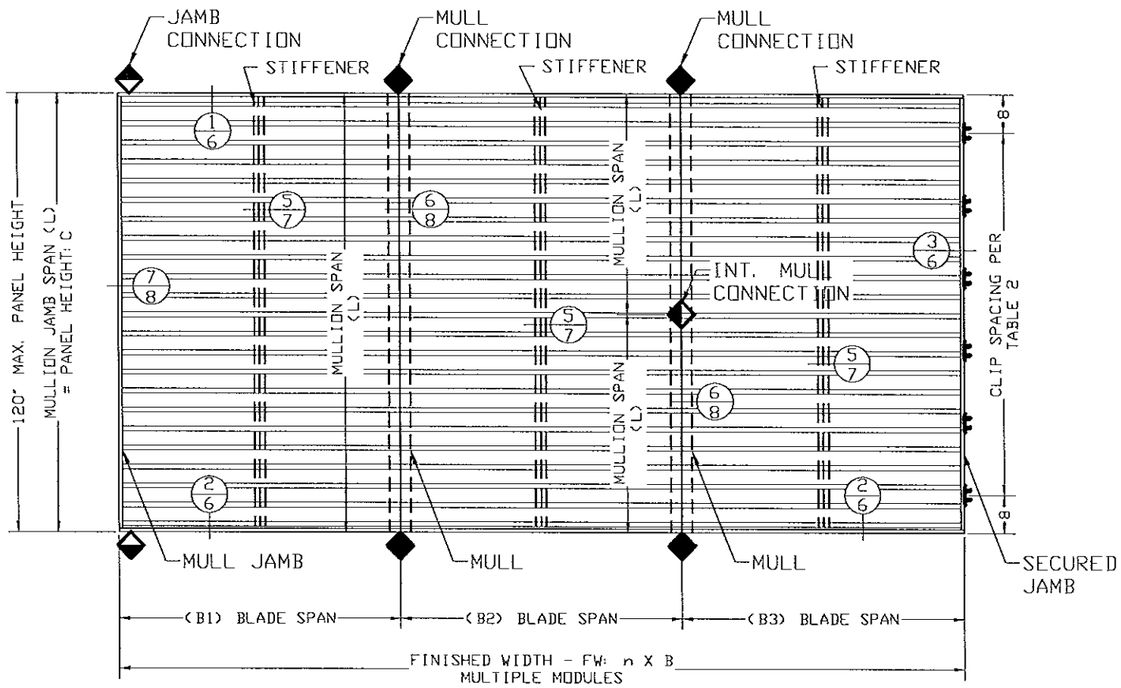

SEE SHEETS 8, 9, 10 AND 11 FOR MULLION AND JAMB CONNECTION

TABLE 4:
BLADE W/ STIFFENER AND WITH MULLIONS
BLADE SPAN X MULL HEIGHT X DESIGNED PRESSURE

Bavg IN	L IN	PRESSURE (PSF) 5.5 Z	5A	RH LH	JAMB
72	24	150	150	108	150
	36	150	150	72	150
	48	150	150	54	150
	60	150	140	43	144
84	24	150	150	92	150
	36	150	150	62	150
	48	150	150	46	150
	60	143	120	37	124
96	24	150	150	81	150
	36	150	150	54	150
	48	150	131	40	135
	60	125	105	32	108

(L) MULLION SPAN
(B) CALCULATED AS FOLLOW:

INTERMEDIATE MULL
Bavg=(B1+B2)/2 OR (B2+B3)/2
Bmax= MAXIMUM OF (B1, B2, B3)

JAMB MULL
Bavg= B1=B3

RECTANGULAR UNIT WITH BLADE SPAN W/ STIFFENER

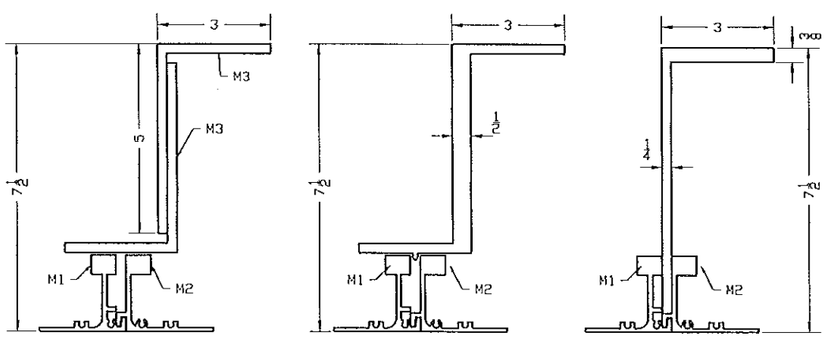

5.5Z MULLION
ALLOY: 6063-T5
PROPERTIES:
Ixx= 34.7 in^4
Sxx= 8.7 in^3

ALTERNATE 1 - 5.5Z MULLION
ALLOY: 6063-T5
PROPERTIES:
Ixx= 35.6 in^4
Sxx= 9.0 in^3

ALTERNATE 2 - 5.5Z MULLION
ALLOY: 6063-T5
PROPERTIES:
Ixx= 35.7 in^4
Sxx= 9.0 in^3

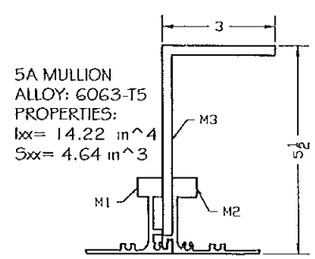

5A MULLION
ALLOY: 6063-T5
PROPERTIES:
Ixx= 14.22 in^4
Sxx= 4.64 in^3

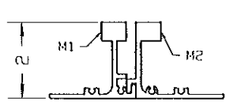

LH RH MULLION
ALLOY: 6063-T5
PROPERTIES:
Ixx= 1.00 in^4
Sxx= 0.89 in^3

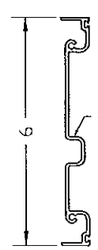

JAMB MULLION
ALLOY: 6063-T5
PROPERTIES:
Ixx= 3.27 in^4
Sxx= 1.1 in^3

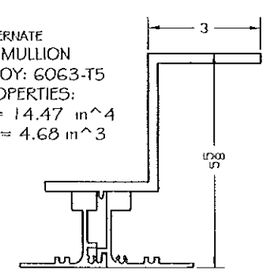

ALTERNATE
5A MULLION
ALLOY: 6063-T5
PROPERTIES:
Ixx= 14.47 in^4
Sxx= 4.68 in^3

EXAMPLE TO VERIFY INSTALLATION CAPACITY:

EXAMPLE 3 - LOUVER WITH 3 EQUAL B= 72" AND (2) 60" MULLIONS
1- DETERMINE WIND PRESSURE AS GENERAL NOTES #4. (Pd±80 PSF)
2- DETERMINE "B" (Bmax=96", Bavg= (96+96)/2=96")
3- BASED ON TABLE 1.1: Bmax= 96" --- Pda= 150 PSF (BLADE W/ STIFFENER)
4- DETERMINE MULLION SPAN. (L=60')
5- JAMBS SECURED TO SUBSTRATE AT 16'OC - USE TABLE 1.1 -- Pda= 94 PSF
6- DETERMINE MULLION CAPACITY. (Bavg=96" X L=60'):
5.5Z = 125 PSF, 5A = 105 PSF AND RHLH= 32 PSF
7- SEE SHEETS 8, 10 AND 11 FOR MULLION ANCHORAGE
8- PRODUCT RATING MUST BE GREATER OR EQUAL THAN Pd=80 PSF
DESIGNED CONTROLLED BY MULLION -- Pd allowable= 105 PSF - 5A MULL OK

EXAMPLE 4 - LOUVER WITH 3 UNEQUAL B1=96", B2=72", B3=96", AND (2) 36" MULLIONS
1- DETERMINE WIND PRESSURE AS GENERAL NOTES #4. (Pd±45 PSF)
2- DETERMINE "B" (Bmax=96", Bavg= (96+72)/2=84")
3- BASED ON TABLE 1.1: Bmax= 96" --- Pda= 150 PSF (BLADE W/ STIFFENER)
4- DETERMINE MULLION SPAN. (L=36')
5- DETERMINE JAMB SPAN SECURED AT TOP & BOTTOM. (L=36')
6- DETERMINE MULLION CAPACITY. (Bavg=84 X L=36'):
5.5Z= 150 PSF, 5A= 150 PSF, RHLH= 62 PSF
7- DETERMINE JAMB CAPACITY. (B=96" X L=36') - JAMB= 150 PSF
8- SEE SHEETS 8, 10 AND 11 FOR MULLION ANCHORAGE
9- PRODUCT RATING MUST BE GREATER OR EQUAL THAN Pd=45 PSF
DESIGNED CONTROLLED BY MULLION RHLH -- Pd allowable= 62 PSF - RHLH MULL OK

MANUFACTURER:
HARRAY, LLC, dba
ARCHITECTURAL LOUVERS
266 W. MITCHELL AVE.
CINCINNATI, OHIO 45232
PH: (888) 568-8371
FX: (888) 568-8370

PRODUCT:
E6JF / E6WF / V6JF
ALUMINUM LOUVERS
LARGE MISSILE IMPACT LEVEL

ENGINEERING:
ENGCO INC. CA 8116
5595 ORANGE DR. 201
DAVIE, FL. 33314
Tel.: (954) 585-0304
WWW.ENGCOINC.COM

PEDRO M. DE FIGUEIREDO
LICENSE No 52609
STATE OF FLORIDA
PROFESSIONAL ENGINEER
MAY 28 2014

Engineer Seal
Pedro De Figueiredo - PE 52609

MIAMI-DADE BCCO:
PRODUCT REVISED
as complying with the Florida Building Code
Acceptance No M-0708.06
Expiration Date 10/31/2018
By
Miami Dade Product Control

DATE: 05/26/2014
SCALE: NA
DESIGN BY: PPMF

SECTION DETAILS

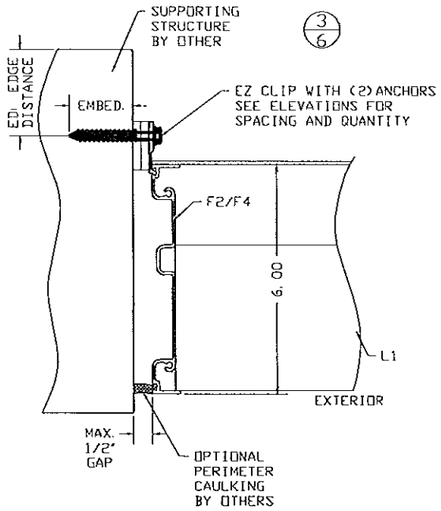

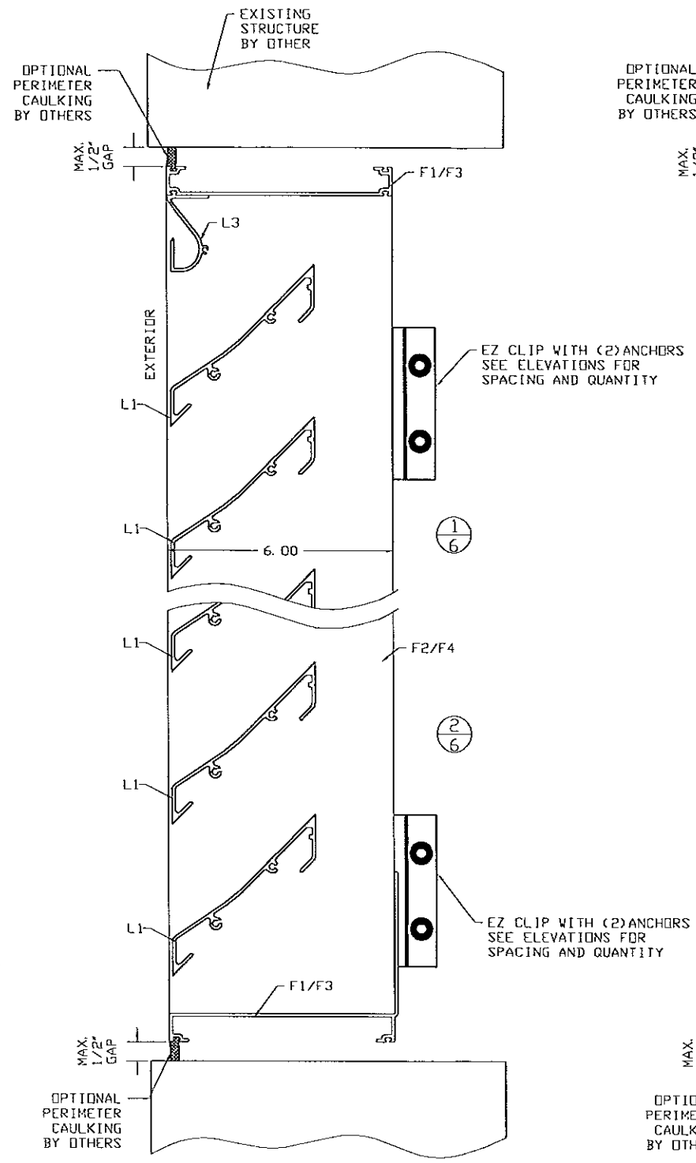

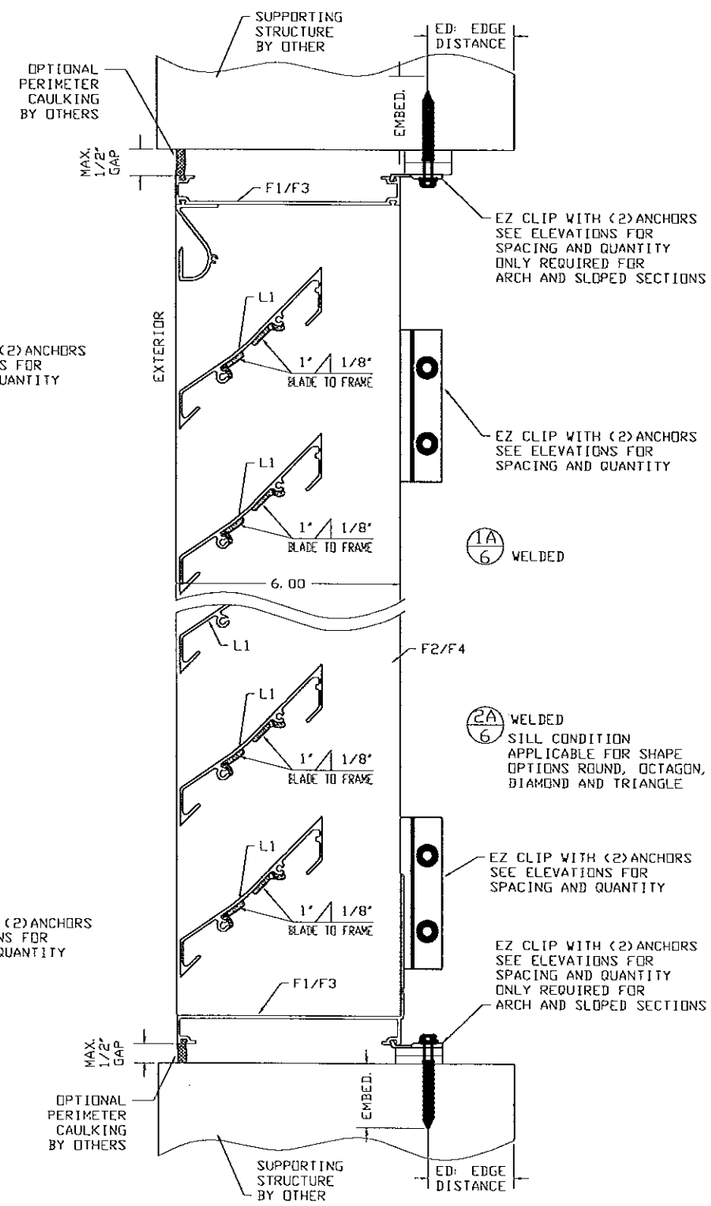

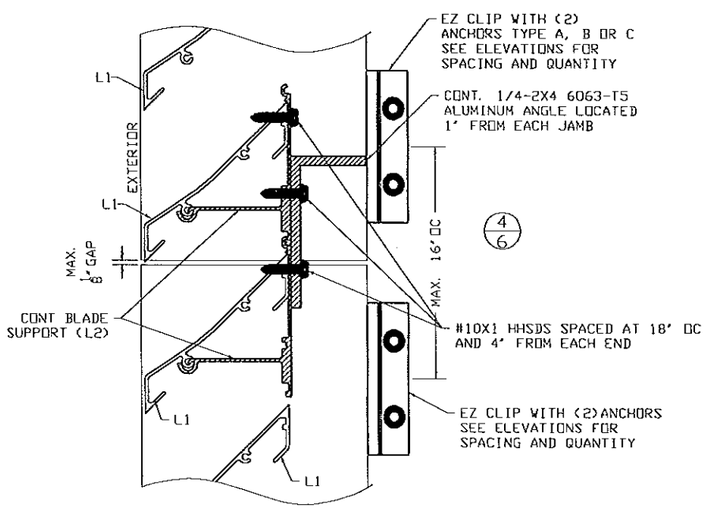

MANUFACTURER:

HARRAY, LLC, dba
ARCHITECTURAL LOUVERS

266 W. MITCHELL AVE.
CINCINNATI, OHIO 45232
PH: (888) 568-8371
FX: (888) 568-8370

PRODUCT:

E6JF / E6WF / V6JF
ALUMINUM LOUVERS
LARGE MISSILE IMPACT LEVEL

ENGINEERING:

ENGCO INC. CA 8116
5595 ORANGE DR. 201
DAVIE, FL. 33314
Tel.: (954) 585-0304
WWW: ENGCOINC.COM

PEDRO M. DE FIGUEIREDO
LICENSE
No. 52609
STATE OF FLORIDA
PROFESSIONAL ENGINEER

MAY 28 2014

Engineer Seal
Pedro De Figueiredo - PE 52609

MIAMI-DADE BCCO:

PRODUCT REVISED
as complying with the Florida Building Code
Acceptance No 14-0708.06
Expiration Date 10/31/2017
By
Miami/Dade Product Control

DATE: 05/26/2014
SCALE: NA
DESIGN BY: PPMF

SHEET 6 OF 13

DRAWING #: 14-100

BLADE STIFFENER AND SECTION SPLIT DETAILS & ASSEMBLY

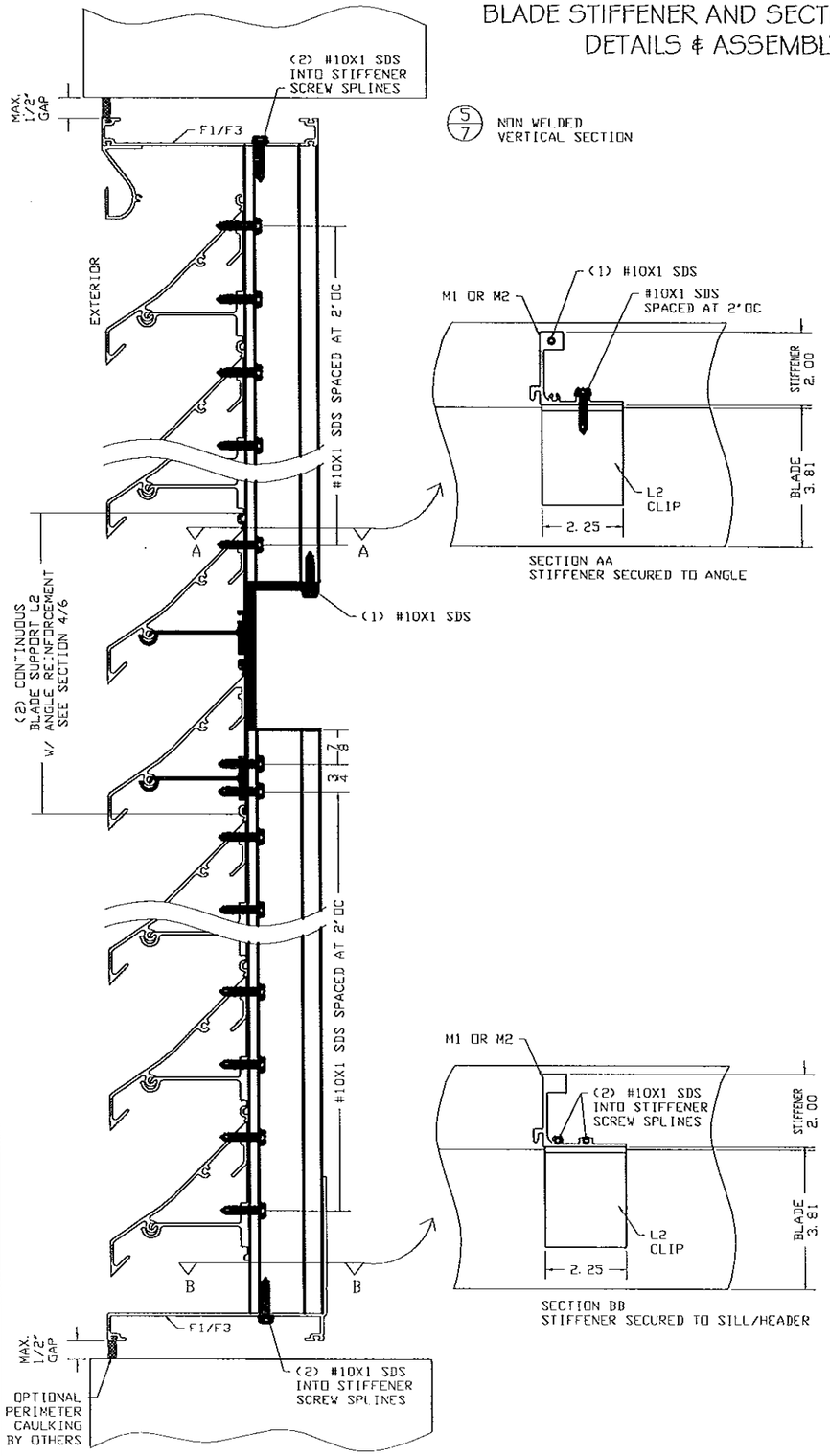

5/7 NON WELDED VERTICAL SECTION

SECTION AA
STIFFENER SECURED TO ANGLE

SECTION BB
STIFFENER SECURED TO SILL/HEADER

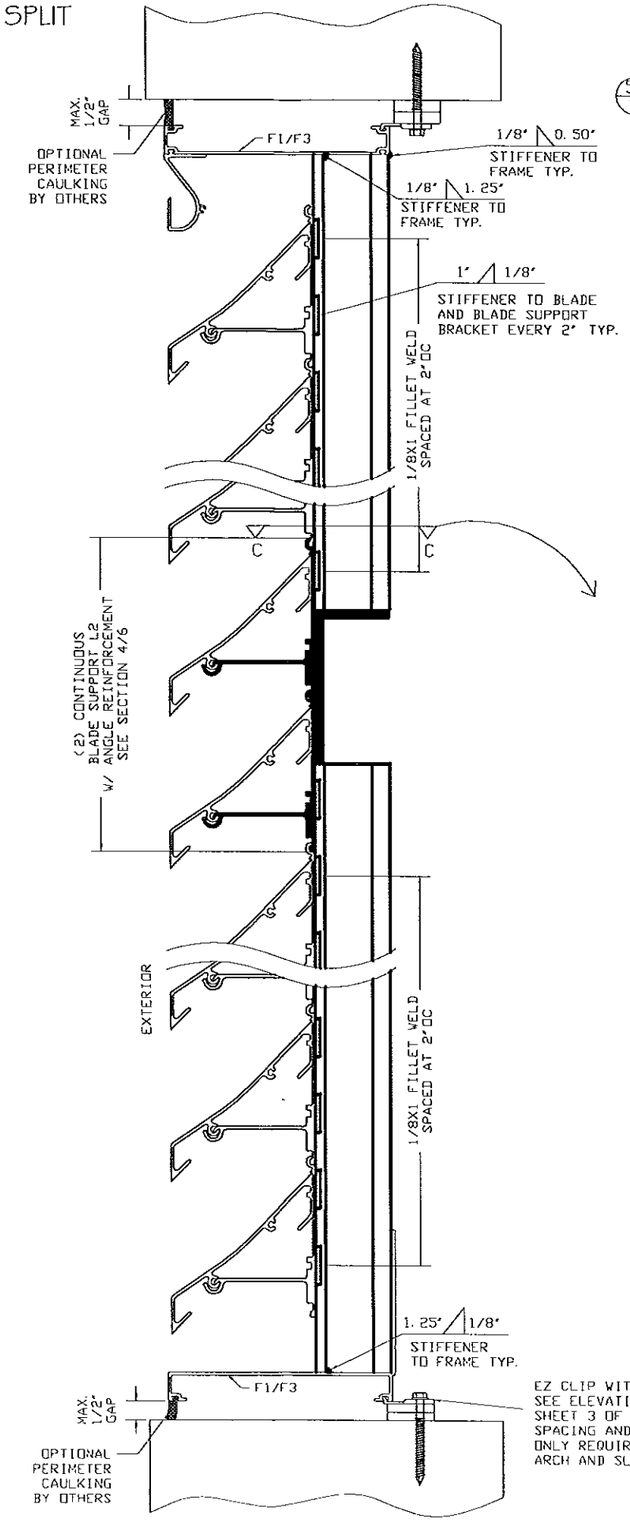

5A/7 WELDED VERTICAL SECTION

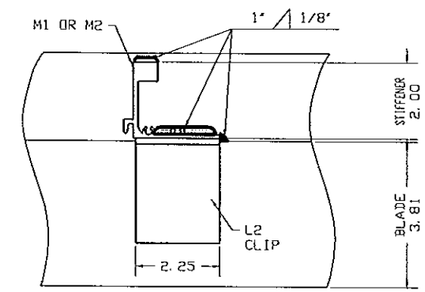

SECTION CC
STIFFENER SECURED TO ANGLE

MANUFACTURER:

HARRAY, LLC, dba
ARCHITECTURAL LOUVERS

266 W. MITCHELL AVE.
CINCINNATI, OHIO 45232
PH: (888) 568-8371
FX: (888) 568-8370

PRODUCT:

E6JF / E6WF / V6JF
ALUMINUM LOUVERS
LARGE MISSILE IMPACT LEVEL

ENGINEERING:

ENGCO INC. CA 8116
5595 ORANGE DR. 201
DAVIE, FL. 33314
Tel.: (954) 585-0304
WWW: ENGCOINC.COM

PEDRO M. DE FIGUEIREDO
LICENSE
No. 52609
STATE OF FLORIDA
PROFESSIONAL ENGINEER

MAY 28 2014
Engineer Seal
Pedro De Figueiredo - PE 52609

MIAMI-DADE BCCO:

PRODUCT REVISED
as complying with the Florida Building Code
Acceptance No M-0708.06
Expiration Date 10/31/2018
By
Miami Dade Product Control

DATE: 05/26/2014
SCALE: NA
DESIGN BY: PPMF

SHEET	DRAWING #:
7 OF 13	14-100

MULLION SECTIONS

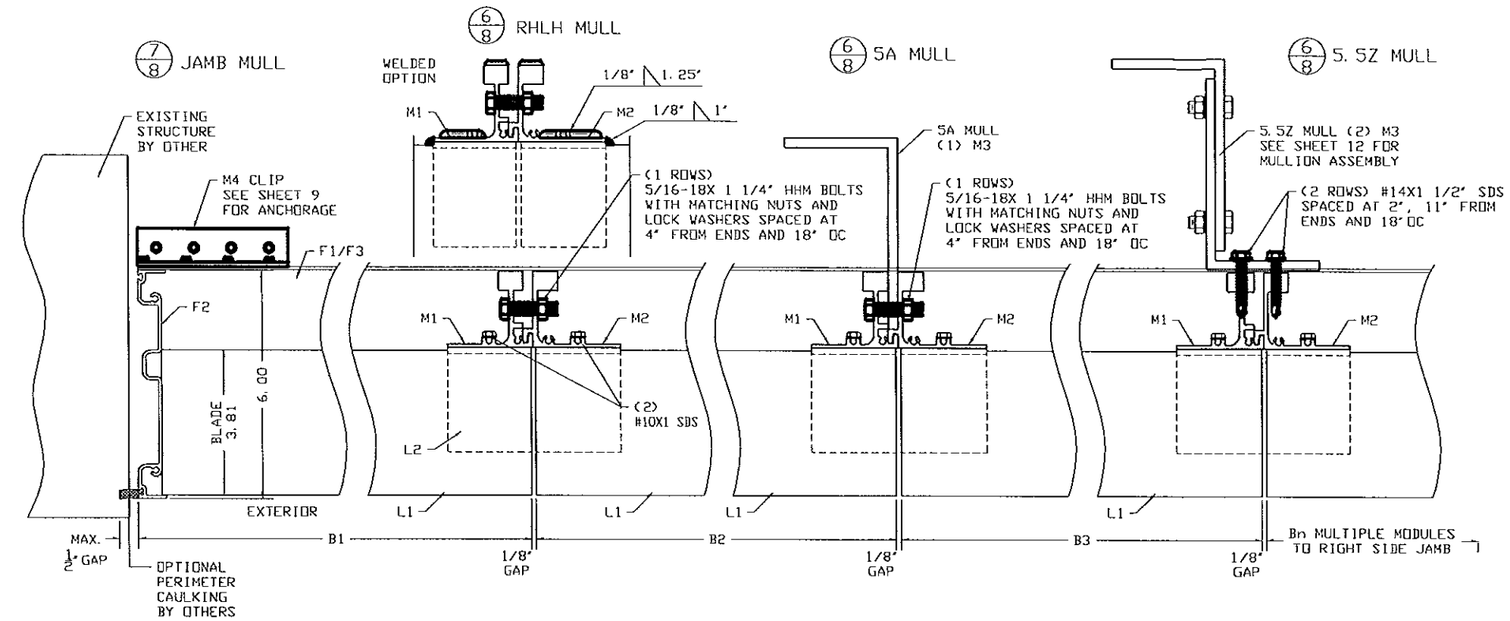

TABLE 3A - INSET MULLION ANCHORAGE DESIGNED LOAD CAPACITY (PSF)

	Bavg IN	L IN	A, B, B1 8	A, B, B1 9	A, B, B1 10	A, B, B1 11	C 8	TYPE OF ANCHORS / # OF ANCHORS
BLADE WITH OUT STIFFENER	36	96	150	150	150	150	150	
		108	148	150	150	150	150	
		120	133	150	150	150	150	
	42	96	143	150	150	150	150	
		108	127	143	150	150	150	
		120	114	129	143	150	150	
	48	96	125	141	150	150	150	
		108	111	125	139	150	150	
		120	100	113	125	138	150	
	54	96	111	123	123	123	123	
		108	99	111	123	123	123	
		120	89	100	111	122	123	
	60	96	100	100	100	100	100	
		108	89	100	100	100	100	
		120	80	90	100	100	100	

	Bavg IN	L IN	A, B, B1 8	A, B, B1 9	A, B, B1 10	A, B, B1 11	C 8	TYPE OF ANCHORS / # OF ANCHORS
BLADE WITH STIFFENER	72	36	150	150	150	150	150	
		48	150	150	150	150	150	
		60	133	150	150	150	150	
	84	36	150	150	150	150	150	
		48	143	150	150	150	150	
		60	114	129	143	150	150	
	96	36	150	150	150	150	150	
		48	125	141	150	150	150	
		60	100	113	125	138	150	

(L) MULLION SPAN
(B) CALCULATED AS FOLLOW:

INTERMEDIATE MULL
Bavg=(B1+B2)/2 OR (B2+B3)/2
Bmax= MAXIMUM OF (B1, B2, B3)

JAMB MULL
Bavg= B1=B3

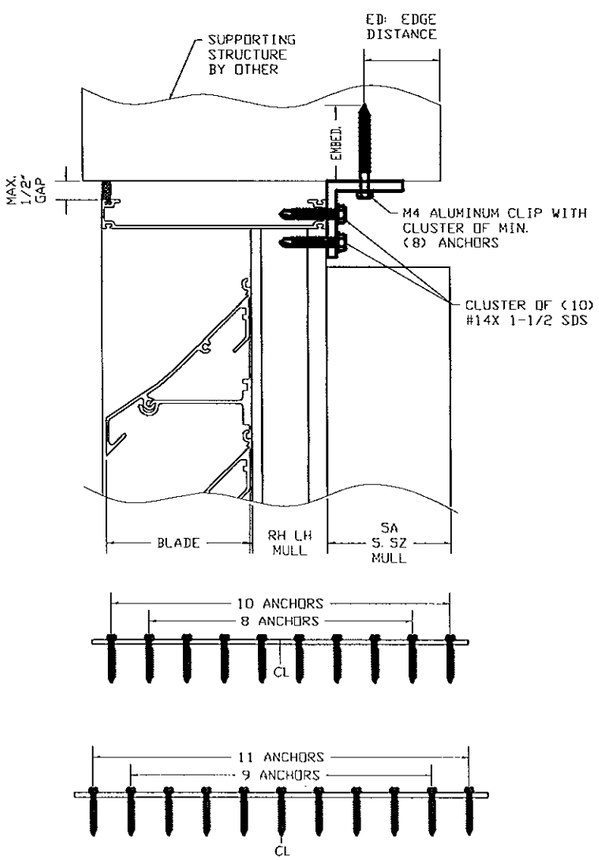

MULLION CONNECTIONS FOR 6/8 SECTIONS - INSET MOUNT

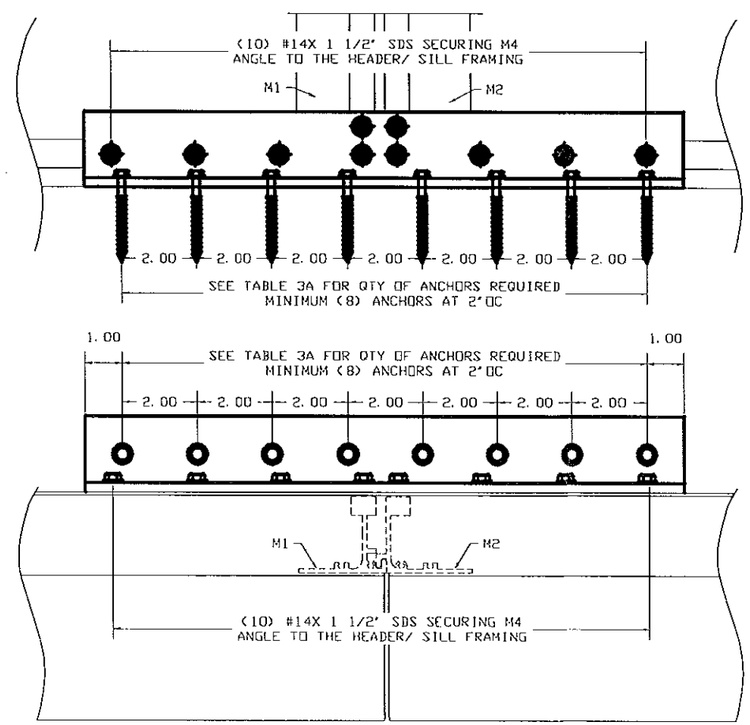

ANCHORS:

TYPE (MIN)	DESCRIPTION (MIN)	SUBSTRATE	ED	EMBED
A	1/4" TAPCONS BY ITW	CONCRETE	2 1/2	1 3/4
B	1/4" TAPCONS BY ITW	WOOD	1	1 1/2
B1	#14 SMS GRADE 5	WOOD	1	1 1/2
C	1/4-14 GR 5 SDS	METAL	1/2	1/8

ANCHORAGE NOTES:
1- EMBED.- EMBEDMENT IS TO BE TAKEN BEYOND ANY WALL DRESSING
2- ED- EDGE DISTANCE IS TO BE MEASURED BEYOND THE WALL DRESSING
3- METAL STRUCTURE TO BE AT LEAST 6063-T5 ALUMINUM ALLOY OR ASTM A36 STEEL
4- METAL STRUCTURE TO HAVE A MINIMUM 1/8" WALL THICKNESS
5- CONCRETE WITH A MINIMUM f'c>=3000 PSI
6- MASONRY TO CONFORM TO ASTM C90
7- ANCHOR TYPE C CAN BE REPLACED BY 1/4-20 HHMS WITH 1/4" NUTS
8- WOOD SUBSTRATE WITH SG>=0.55
9- 1/4" ULTRACONS BY ELCO CAN BE USED AS ALTERNATE TO A AND A1 TYPE ANCHORS

MANUFACTURER:

HARRAY, LLC, dba
ARCHITECTURAL LOUVERS

266 W. MITCHELL AVE.
CINCINNATI, OHIO 45232
PH: (888) 568-8371
FX: (888) 568-8370

PRODUCT:

E6JF / E6WF / V6JF
ALUMINUM LOUVERS
LARGE MISSILE IMPACT LEVEL

ENGINEERING:
ENGCO INC. CA 8116
5595 ORANGE DR. 201
DAVIE, FL. 33314
Tel.: (954) 585-0304
WWW: ENGCOINC.COM

PEDRO M. DE FIGUEIREDO
LICENSE
No. 52609
STATE OF FLORIDA
PROFESSIONAL ENGINEER

MAY 28 2014
Engineer Seal
Pedro De Figueiredo - PE 52609

MIAMI-DADE BCCO:

PRODUCT REVISED
as complying with the Florida Building Code
Acceptance No 14-0708.06
Expiration Date 10/31/2018
By
Miami-Dade Product Control

DATE: 05/26/2014
SCALE: NA
DESIGN BY: PPMF

SHEET 8 OF 13

DRAWING #: 14-100

JAMB MULLION CONNECTIONS FOR (7/8) SECTIONS - INSET MOUNT

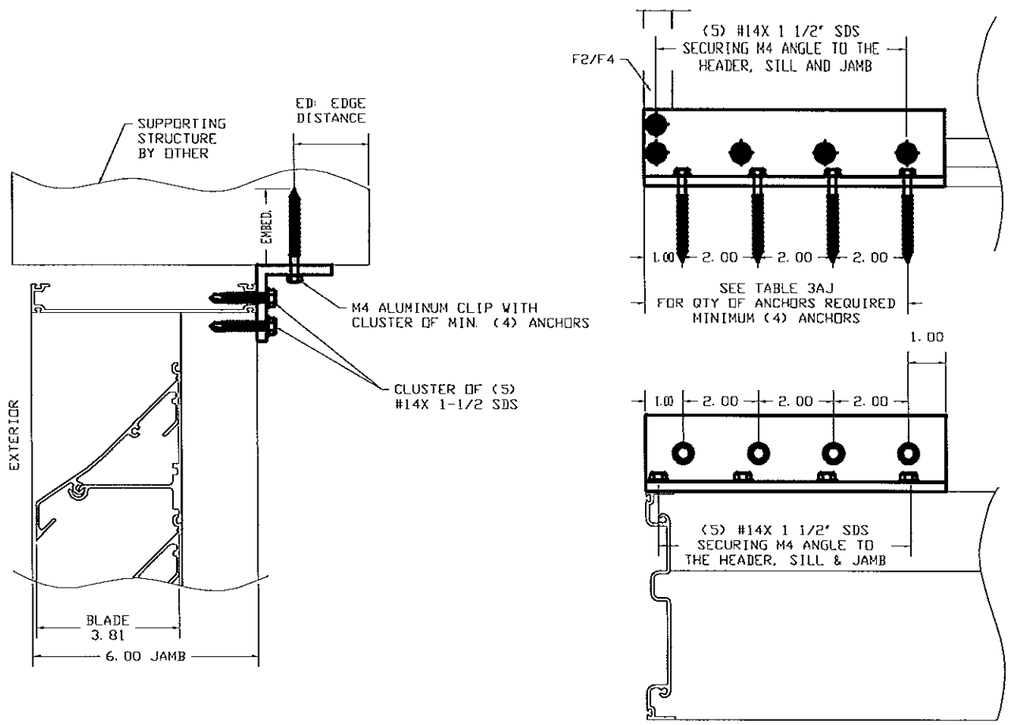

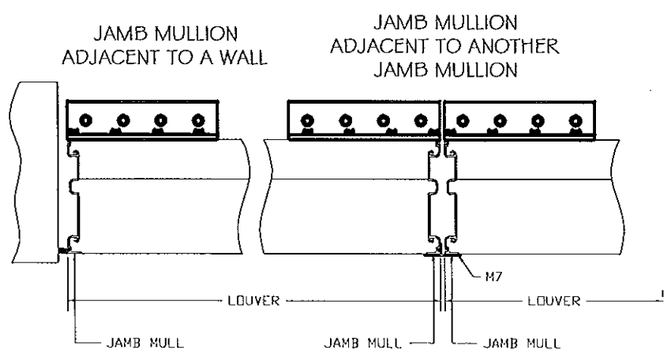

TABLE 3AJ - INSET JAMB MULLION ANCHORAGE DESIGNED LOAD CAPACITY (PSF)

	Bavg IN	L IN	A, B, B1 4	A, B, B1 5	A, B, B1 6	C 4	TYPE OF ANCHORS / # OF ANCHORS
BLADE WITH OUT STIFFENER	36	96	150	150	150	150	
		108	148	150	150	150	
		120	133	150	150	150	
	42	96	143	150	150	150	
		108	127	150	150	150	
		120	114	143	150	150	
	48	96	125	150	150	150	
		108	111	139	150	150	
		120	100	125	150	150	
	54	96	111	123	123	123	
		108	99	123	123	123	
		120	89	111	123	123	
	60	96	100	100	100	100	
		108	89	100	100	100	
		120	80	100	100	100	

	Bavg IN	L IN	A, B, B1 4	A, B, B1 5	A, B, B1 6	C 4	TYPE OF ANCHORS / # OF ANCHORS
BLADE WITH STIFFENER	72	36	150	150	150	150	
		48	150	150	150	150	
		60	133	150	150	150	
	84	36	150	150	150	150	
		48	143	150	150	150	
		60	114	143	150	150	
	96	36	150	150	150	150	
		48	125	150	150	150	
		60	100	125	150	150	

(L) MULLION SPAN
(B) CALCULATED AS FOLLOW:

INTERMEDIATE MULL
Bavg=(B1+B2)/2 OR (B2+B3)/2
Bmax= MAXIMUM OF (B1, B2, B3)

JAMB MULL
Bavg= B1=B3

ANCHORS:

TYPE (MIN)	DESCRIPTION (MIN)	SUBSTRATE	ED	EMBED
A	1/4" TAPCONS BY ITW	CONCRETE	2 1/2	1 3/4
B	1/4" TAPCONS BY ITW	WOOD	1	1 1/2
B1	#14 SMS GRADE 5	WOOD	1	1 1/2
C	1/4-14 GR 5 SDS	METAL	1/2	1/8

ANCHORAGE NOTES:
1- EMBED.- EMBEDMENT IS TO BE TAKEN BEYOND ANY WALL DRESSING
2- ED- EDGE DISTANCE IS TO BE MEASURED BEYOND THE WALL DRESSING
3- METAL STRUCTURE TO BE AT LEAST 6063-T5 ALUMINUM ALLOY OR ASTM A36 STEEL
4- METAL STRUCTURE TO HAVE A MINIMUM 1/8" WALL THICKNESS
5- CONCRETE WITH A MINIMUM fc>=3000 PSI
6- MASONRY TO CONFORM TO ASTM C90
7- ANCHOR TYPE C CAN BE REPLACED BY 1/4-20 HHMS WITH 1/4" NUTS
8- WOOD SUBSTRATE WITH SG>=0.55
9- 1/4" ULTRACONS BY ELCO CAN BE USED AS ALTERNATE TO A AND A1 TYPE ANCHORS

MANUFACTURER:

HARRAY, LLC, dba
ARCHITECTURAL LOUVERS

266 W. MITCHELL AVE.
CINCINNATI, OHIO 45232
PH: (888) 568-8371
FX: (888) 568-8370

PRODUCT:

E6JF / E6WF / V6JF
ALUMINUM LOUVERS
LARGE MISSILE IMPACT LEVEL

ENGINEERING:
ENGCO INC. CA 8116
5595 ORANGE DR. 201
DAVIE, FL. 33314
Tel.: (954) 585-0304
WWW: ENGCOINC.COM

PEDRO M. DE FIGUEIREDO
LICENSE No. 52609
STATE OF FLORIDA
PROFESSIONAL ENGINEER

MAY 28 2014
Engineer Seal
Pedro De Figueiredo - PE 52609

MIAMI-DADE BCCO:

PRODUCT REVISED
as complying with the Florida Building Code
Acceptance No 14-0708.06
Expiration Date 10/31/2018
By
Miami Dade Product Control

DATE: 05/26/2014
SCALE: NA
DESIGN BY: PPMF

DRAWING #: 14-100

5.5Z & 5A MULLION CONNECTIONS - BUILT OUT MOUNT

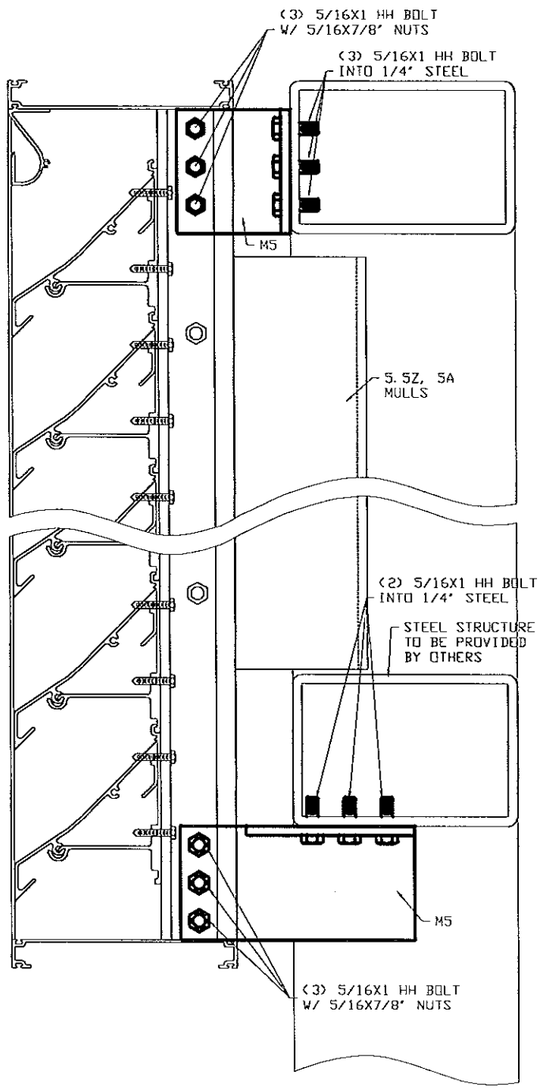

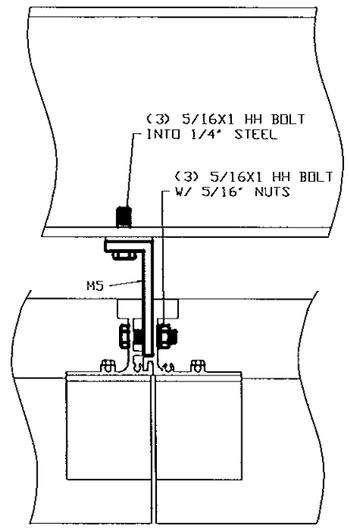

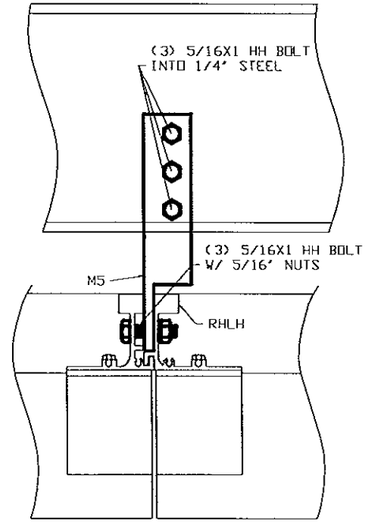

CONNECTIONS ARE ACCEPTABLE FOR ALL CONDITIONS LISTED ON TABLES 3 OR 4 5.5Z & 5A MULLIONS

ANCHORS:

TYPE	DESCRIPTION	SUBSTRATE	ED	EMBED
C1	5/16-18 GR 5 HH BOLTS	METAL	1/2	1/4

ANCHORAGE NOTES:
1- BOLTS TO HAVE FULL TREAD PENETRATION INTO STEEL
2- BOLTS TO BE LOCK IN PLACE WITH PERMATEX THREALOCKER BLUE
3- METAL STRUCTURE TO BE AT LEAST 1/4" THICK ASTM A36 STEEL
4- CONNECTIONS ARE INTERCHANGEABLE, IT CAN BE LOADED IN SHEAR OR TENSION
5- 5/16-18 GRADE 5 HH SELF DRILLERS CAN BE USED AS ALTERNATE BOLTS

MANUFACTURER:

HARRAY, LLC, dba
ARCHITECTURAL LOUVERS

266 W. MITCHELL AVE.
CINCINNATI, OHIO 45232
PH: (888) 568-8371
FX: (888) 568-8370

PRODUCT:

E6JF / E6WF / V6JF
ALUMINUM LOUVERS
LARGE MISSILE IMPACT LEVEL

ENGINEERING:

ENGCO INC. CA 8116
5595 ORANGE DR. 201
DAVIE, FL. 33314
Tel.: (954) 585-0304
WWW: ENGCOINC.COM

PEDRO M. DE FIGUEIREDO
LICENSE
No. 52609
STATE OF FLORIDA
PROFESSIONAL ENGINEER

MAY 28 2014

Engineer Seal
Pedro De Figueiredo - PE 52609

MIAMI-DADE BCCO:

PRODUCT REVISED
as complying with the Florida Building Code
Acceptance No 14-0708.06
Expiration Date 10/31/2018
By _____
Miami Dade Product Control

DATE: 05/26/2014
SCALE: NA
DESIGN BY: PPMF

SHEET	DRAWING #:
10 OF 13	14-100

JAMB & RHLH MULLION CONNECTIONS - BUILT OUT MOUNT

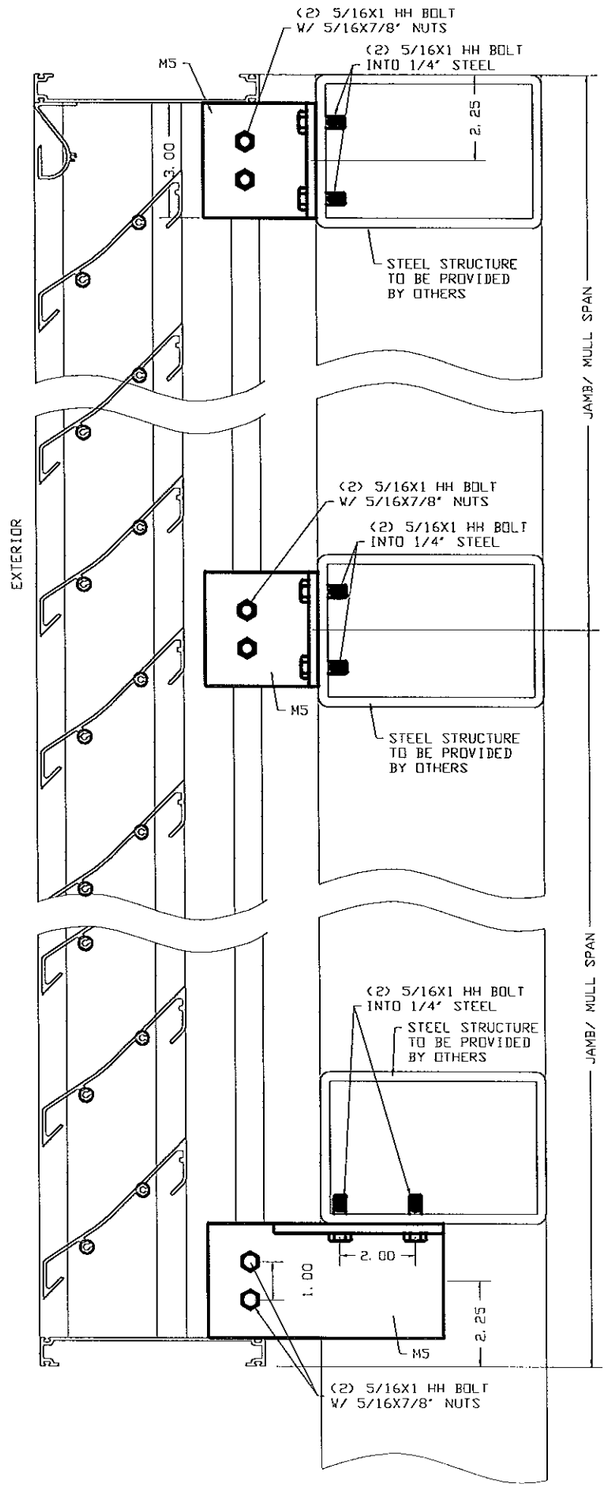

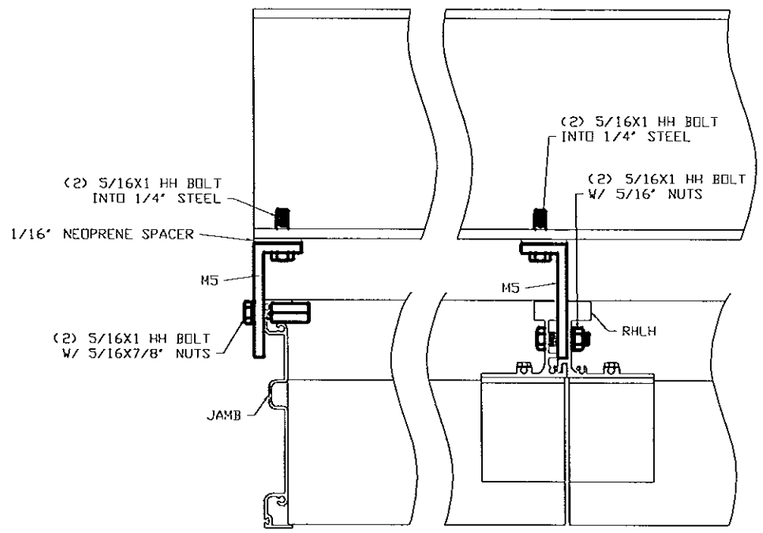

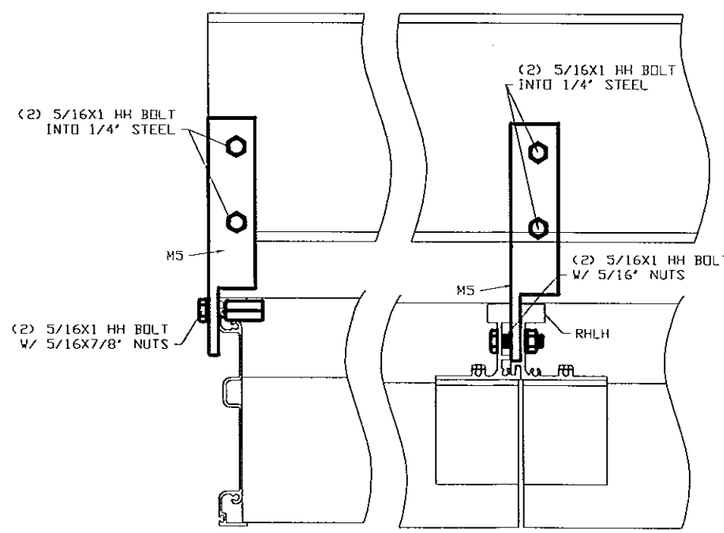

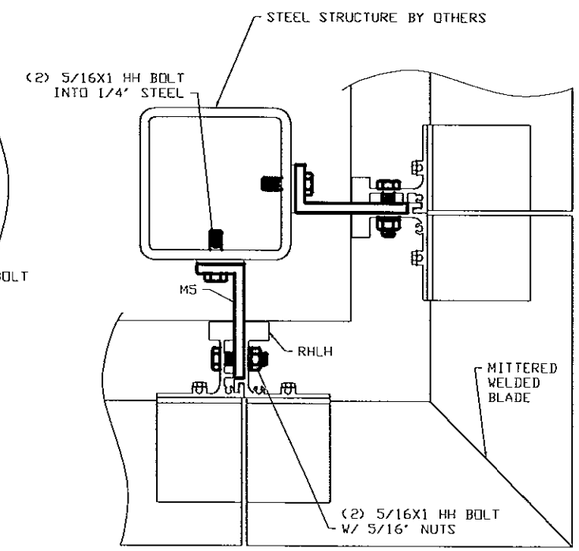

CONNECTIONS ARE ACCEPTABLE FOR ALL CONDITIONS LISTED ON TABLES 3 OR 4 JAMB MULL, RH LH MULL

ANCHORS:

TYPE	DESCRIPTION	SUBSTRATE	ED	EMBED
C1	5/16-18 GR 5 HH BOLTS	METAL	1/2	1/4

ANCHORAGE NOTES:
1- BOLTS TO HAVE FULL TREAD PENETRATION INTO STEEL
2- BOLTS TO BE LOCK IN PLACE WITH PERMATEX THREALOCKER BLUE
3- METAL STRUCTURE TO BE AT LEAST 1/4" THICK ASTM A36 STEEL
4- CONNECTIONS ARE INTERCHANGABLE
5- USE TABLES 1 OR 2 TO CALCULATE THE BLADE CAPACITY WHEN MULLION RHLH IS ANCHORED AT 16" OC.
6- 5/16-18 GRADE 5 HH SELF DRILLERS CAN BE USED AS ALTERNATE BOLTS

MANUFACTURER:

HARRAY, LLC, dba
ARCHITECTURAL LOUVERS

266 W. MITCHELL AVE.
CINCINNATI, OHIO 45232
PH: (888) 568-8371
FX: (888) 568-8370

PRODUCT:

E6JF / E6WF / V6JF
ALUMINUM LOUVERS
LARGE MISSILE IMPACT LEVEL

ENGINEERING:

ENGCO INC. CA 8116
5595 ORANGE DR. 201
DAVIE, FL. 33314
Tel.: (954) 585-0304
WWW: ENGCOINC.COM

PEDRO M. DE FIGUEIREDO
LICENSE
No. 52609
STATE OF FLORIDA
PROFESSIONAL ENGINEER

MAY 28 2014

Engineer Seal
Pedro De Figueiredo - PE 52609

MIAMI-DADE BCCO:

PRODUCT REVISED
as complying with the Florida Building Code
Acceptance No 14-0708.06
Expiration Date 10/31/2018
By _____
Miami Dade Product Control

DATE: 05/26/2014
SCALE: NA
DESIGN BY: PPMF

DRAWING #: 14-100

LOUVER MANUFACTURE COMPONENTS

NOTE: MATERIAL FOR ALL COMPONENTS IS MIN TYPE 6063-T5
EXTRUDED ALUMINUM.ALL DIMENSIONS ARE INCHES.

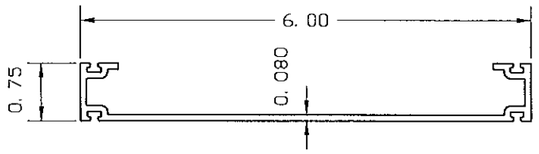

F1- FRAME HEADER OR FRAME SILL

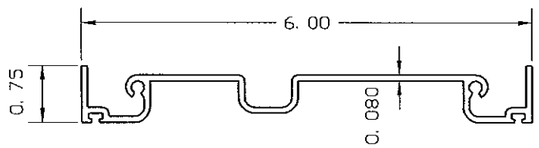

F2- FRAME JAMB / MULL

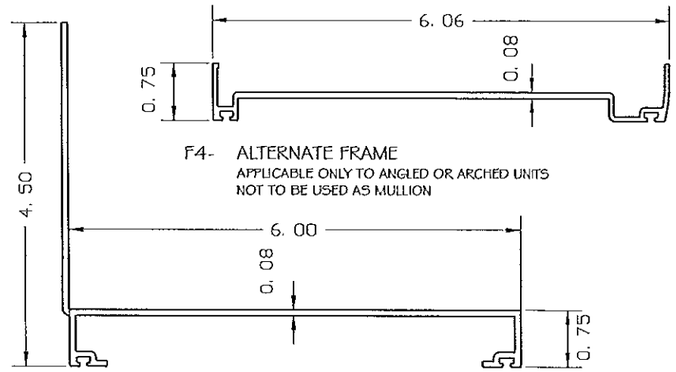

F4- ALTERNATE FRAME
APPLICABLE ONLY TO ANGLED OR ARCHED UNITS
NOT TO BE USED AS MULLION

F3- ALTERNATE FRAME HEADER OR SILL

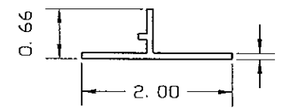

M7- JAMB TRIM

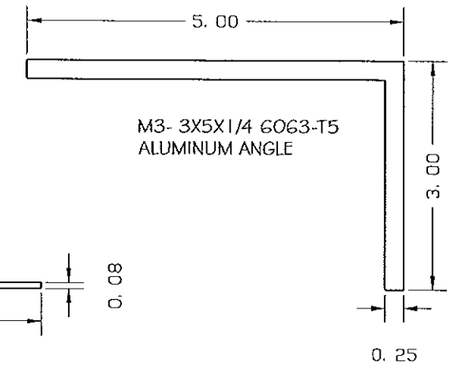

M3- 3X5X1/4 6063-T5
ALUMINUM ANGLE

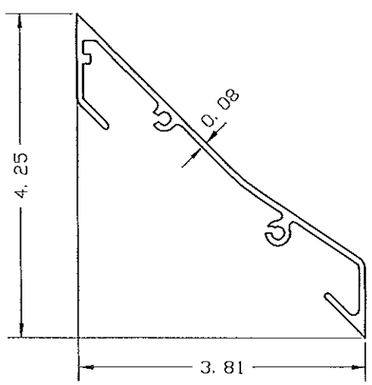

L1- LOUVER BLADE

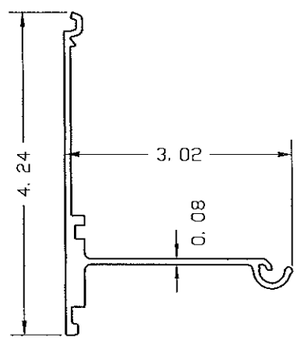

L2- BLADE SUPPORT

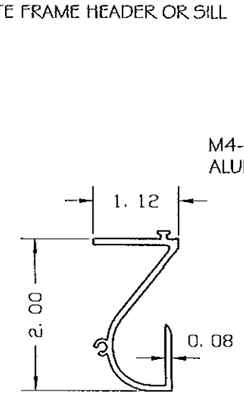

L3- DRAINAGE GUTTER
OPTIONAL

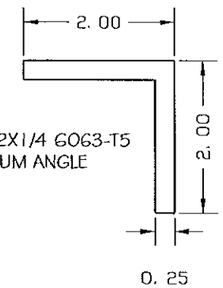

M4- 2X2X1/4 6063-T5
ALUMINUM ANGLE

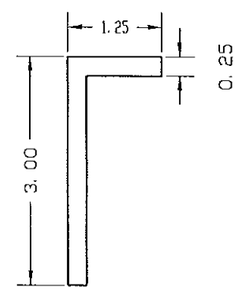

M5- 1 1/4X3X1/4 6063-T5
ALUMINUM ANGLE

5.5Z MULLION ASSEMBLY

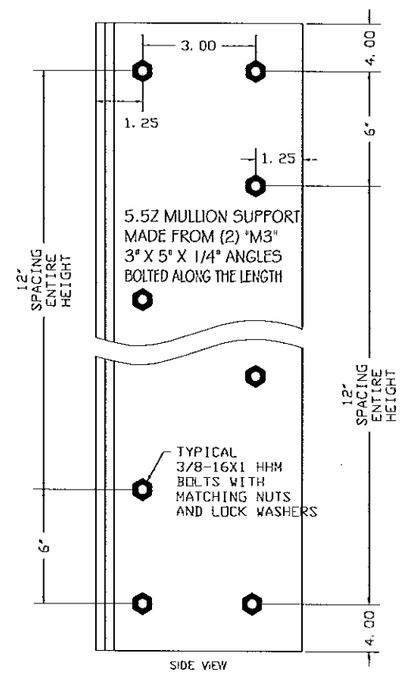

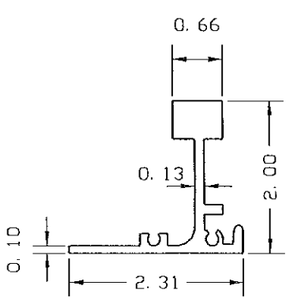

M1- RH HIDDEN MULLION
AND BLADE STIFFENER

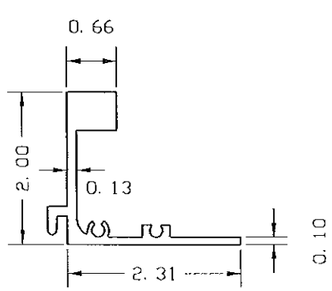

M2- LH HIDDEN MULLION
AND BLADE STIFFENER

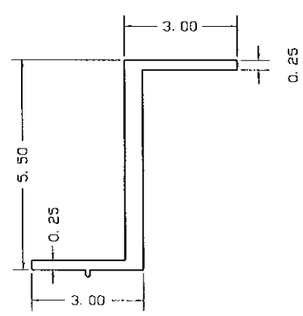

M6- 5.5Z
ALTERNATE 1 MULLION
6063-T5 MULL

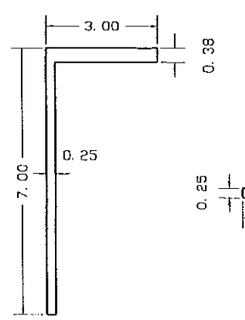

M8- 5.5Z
ALTERNATE 2 MULLION
6063-T5 MULL

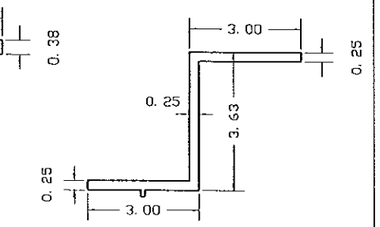

M9- 5A
ALTERNATE MULLION
6063-T5 MULL

MANUFACTURER:

HARRAY, LLC, dba
ARCHITECTURAL LOUVERS

266 W. MITCHELL AVE.
CINCINNATI, OHIO 45232
PH: (888) 568-8371
FX: (888) 568-8370

PRODUCT:

E6JF / E6WF / V6JF
ALUMINUM LOUVERS
LARGE MISSILE IMPACT LEVEL

ENGINEERING:

ENGCO INC. CA 8116
5595 ORANGE DR. 201
DAVIE, FL. 33314
Tel.: (954) 585-0304
WWW: ENGCOINC.COM

PEDRO M. DE FIGUEIREDO
LICENSE
No. 52609
STATE OF FLORIDA
PROFESSIONAL ENGINEER

MAY 28 2014

Engineer Seal
Pedro De Figueiredo - PE 52609

MIAMI-DADE BCCO:

PRODUCT REVISED
as complying with the Florida Building Code
Acceptance No 14-0708.06
Expiration Date 10/31/2018
By
Miami Dade Product Control

DATE: 05/26/2014
SCALE: NA
DESIGN BY: PPMF

SHEET	DRAWING #:
12 OF 13	14-100

BILL OF MATERIAL

PART	DESCRIPTION	MATERIAL
F1	FRAME HEADER / SILL	6063-T5 ALUMINUM
F2	FRAME JAMB/ END MULL	6063-T5 ALUMINUM
F3	ALTERNATE FRAME HEADER / SILL	6063-T5 ALUMINUM
F4	ALTERNATE FRAME JAMB	6063-T5 ALUMINUM
F5	"EZ" CLIP 4 1/8X1 3/8	6063-T5 ALUMINUM
L1	LOUVER BLADE	6063-T5 ALUMINUM
L2	BLADE SUPPORT	6063-T5 ALUMINUM
L3	OPTIONAL DRAINAGE GUTTER	6063-T5 ALUMINUM
M1	RH HIDDEN MULLION OR BLADE STIFFENER	6063-T5 ALUMINUM
M2	LH HIDDEN MULLION OR BLADE STIFFENER	6063-T5 ALUMINUM
M3	3X5X1/4 ALUMINUM ANGLE	6063-T5 ALUMINUM
M4	2X2X1/4 ALUMINUM ANGLE	6063-T5 ALUMINUM
M5	1 1/2X3X1/4 ALUMINUM ANGLE	6063-T5 ALUMINUM
M6	ALTERNATE 5.5Z MULLION	6063-T5 ALUMINUM
M7	OPTIONAL JAMB TRIM	6063-T5 ALUMINUM
S1	5/16"X1" HEX HEAD BOLT	CARBON STEEL ZINC PLATED
S2	5/16" MATCHING NUTS	CARBON STEEL ZINC PLATED
S3	#14X1 1/2" SELF DRILLING SCREWS	CARBON STEEL ZINC PLATED
S4	#10X1" SELF DRILLING SCREWS	CARBON STEEL ZINC PLATED

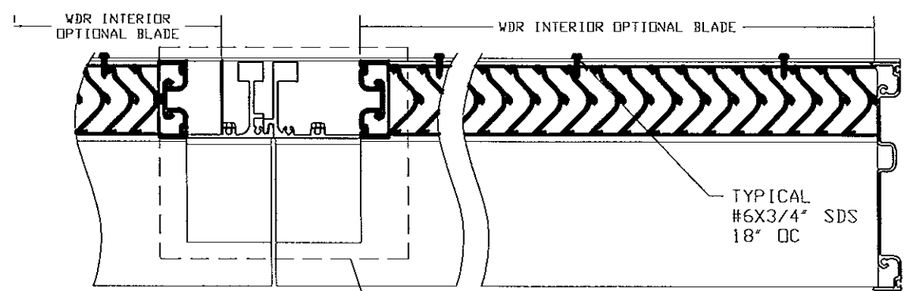

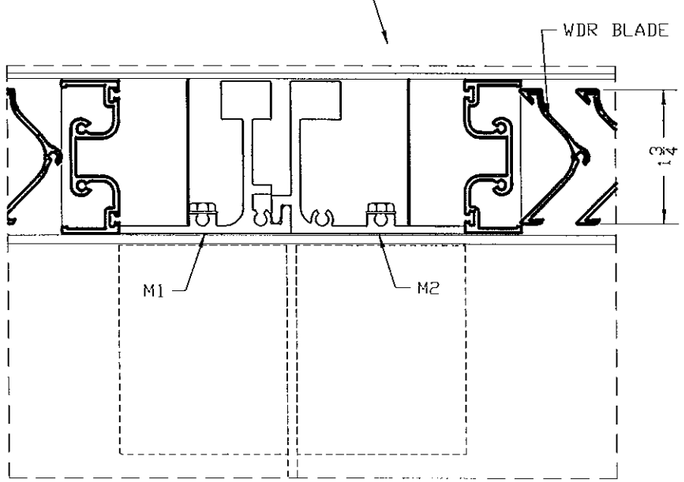

OPTIONAL NON STRUCTURAL ACCESSORIES

WDR BLADE RACK ASSEMBLY

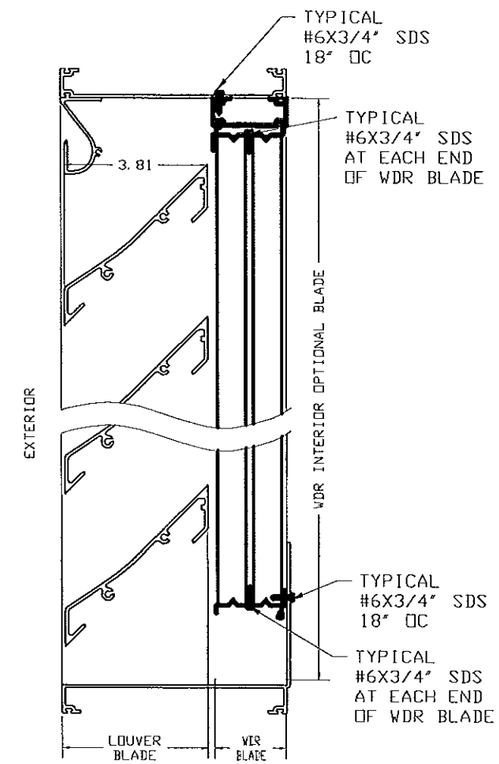

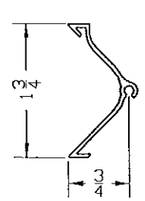

01- WDR BLADE
6063-T5 ALUMINUM

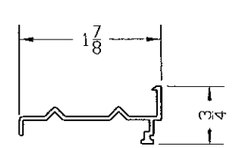

02- WDR FRAME
6063-T5 ALUMINUM

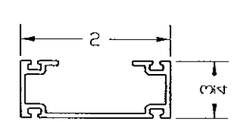

03- WDR FRAME ADAPTOR
6063-T5 ALUMINUM

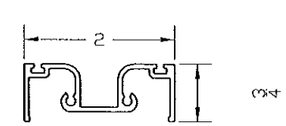

04- WDR FRAME JAMB
6063-T5 ALUMINUM

MANUFACTURER:

HARRAY, LLC, dba
ARCHITECTURAL LOUVERS

266 W. MITCHELL AVE.
CINCINNATI, OHIO 45232
PH: (888) 568-8371
FX: (888) 568-8370

PRODUCT:

E6JF / E6WF / V6JF
ALUMINUM LOUVERS
LARGE MISSILE IMPACT LEVEL

ENGINEERING:

ENGCO INC. CA 8116
5595 ORANGE DR. 201
DAVIE, FL. 33314
Tel.: (954) 585-0304
WWW: ENGCOINC.COM

PEDRO M. DE FIGUEIREDO
LICENSE
No. 52609
STATE OF FLORIDA
PROFESSIONAL ENGINEER

MAY 28 2014

Engineer Seal
Pedro De Figueiredo - PE 52609

MIAMI-DADE BCCO:

PRODUCT REVISED
as complying with the Florida Building Code
Acceptance No 14-0708.06
Expiration Date 10/31/2018
By
Miami-Dade Product Control

DATE: 05/26/2014
SCALE: NA
DESIGN BY: PPMF

SHEET	DRAWING #:
13 OF 13	14-100