MIAMI-DADE COUNTY
PRODUCT CONTROL SECTION
11805 SW 26 Street, Room 208
Miami, Florida 33175-2474
T (786) 315-2590 F (786) 315-2599
www.miamidade.gov/economy

DEPARTMENT OF REGULATORY AND ECONOMIC RESOURCES (RER)
BOARD AND CODE ADMINISTRATION DIVISION

NOTICE OF ACCEPTANCE (NOA)

The Bilco Company
P.O. Box 1203
New Haven, CT 06505

SCOPE:

This NOA is being issued under the applicable rules and regulations governing the use of construction materials. The documentation submitted has been reviewed and accepted by Miami-Dade County RER-Product Control Section to be used in Miami Dade County and other areas where allowed by the Authority Having Jurisdiction (AHJ).

This NOA shall not be valid after the expiration date stated below. The Miami-Dade County Product Control Section (In Miami Dade County) and/or the AHJ (in areas other than Miami Dade County) reserve the right to have this product or material tested for quality assurance purposes. If this product or material fails to perform in the accepted manner, the manufacturer will incur the expense of such testing and the AHJ may immediately revoke, modify, or suspend the use of such product or material within their jurisdiction. RER reserves the right to revoke this acceptance, if it is determined by Miami-Dade County Product Control Section that this product or material fails to meet the requirements of the applicable building code.

This product is approved as described herein, and has been designed to comply with the Florida Building Code, including the High Velocity Hurricane Zone.

DESCRIPTION: Series S/NB Steel and Aluminum Roof Hatch

APPROVAL DOCUMENT: Drawing titled "S/NB Door Assembly", Sheets 1 through 10 of 10, dated 10/15/2009, with last revision dated 07/07/2011, prepared by The Bilco Company, signed and sealed by Mark A. De Stefano, P.E., bearing the Miami-Dade County Product Control renewal stamp with the Notice of Acceptance number and expiration date by the Miami-Dade County Product Control Section.

MISSILE IMPACT RATING: Large and Small Missile Impact Resistant

LABELING: Each unit shall bear a permanent label with the manufacturer's name or logo, city, state and following statement: "Miami-Dade County Product Control Approved", unless otherwise noted herein.

RENEWAL of this NOA shall be considered after a renewal application has been filed and there has been no change in the applicable building code negatively affecting the performance of this product.

TERMINATION of this NOA will occur after the expiration date or if there has been a revision or change in the materials, use, and/or manufacture of the product or process. Misuse of this NOA as an endorsement of any product, for sales, advertising or any other purposes shall automatically terminate this NOA. Failure to comply with any section of this NOA shall be cause for termination and removal of NOA.

ADVERTISEMENT: The NOA number preceded by the words Miami-Dade County, Florida, and followed by the expiration date may be displayed in advertising literature. If any portion of the NOA is displayed, then it shall be done in its entirety.

INSPECTION: A copy of this entire NOA shall be provided to the user by the manufacturer or its distributors and shall be available for inspection at the job site at the request of the Building Official.

This NOA **renews NOA # 11-0722.10** and consists of this page 1 and evidence page E-1, as well as approval document mentioned above.

The submitted documentation was reviewed by **Carlos M. Utrera, P.E.**

MIAMI-DADE COUNTY APPROVED

02/02/2015

NOTICE OF ACCEPTANCE: EVIDENCE SUBMITTED

A. DRAWINGS *"Submitted under NOA # 11-0722.10"*

1. Drawing titled "S/NB Door Assembly", Sheets 1 through 10 of 10, dated 10/15/2009, with last revision dated 07/07/2011, prepared by The Bilco Company, signed and sealed by Mark A. De Stefano, P.E.

B. TESTS *"Submitted under NOA # 08-1219.01"*

1. Test report on 1) Air Infiltration Test, per FBC, TAS 202-94
   2) Uniform Static Air Pressure Test, Loading per FBC TAS 202-94
   3) Water Resistance Test, per FBC, TAS 202-94
   4) Large Missile Impact Test per FBC, TAS 201-94,
   5) Cyclic Wind Pressure Test per FBC, TAS 203-94,

   along with marked-up drawings and installation diagram of Series NB50/20 Aluminum and Steel Roof Scuttle, prepared by Certified Testing Laboratories, Test Report No. **1862W**, dated 11/18/2008, signed and sealed by Ramesh Patel, P.E.
2. Test report on 1) Air Infiltration Test, per FBC, TAS 202-94
   2) Uniform Static Air Pressure Test, Loading per FBC TAS 202-94
   3) Water Resistance Test, per FBC, TAS 202-94
   4) Large Missile Impact Test per FBC, TAS 201-94,
   5) Cyclic Wind Pressure Test per FBC, TAS 203-94,

   along with marked-up drawings and installation diagram of Series S50/20 Aluminum and Steel Roof Scuttle, prepared by Certified Testing Laboratories, Test Report No. **1862W-1**, dated 11/18/2008, signed and sealed by Ramesh Patel, P.E.
3. Addendum to Test Reports No. **CTLA 1862W/W-1** on Uniform Static Air Pressure Test, Loading per FBC TAS 202-94 and Forced Entry Resistance Test, per FBC, TAS 202-94, dated 03/11/2009, signed and sealed by Ramesh Patel, P.E.

C. CALCULATIONS *"Submitted under NOA # 08-1219.01"*

1. Structural calculations prepared by De Stefano Engineering Group PL, dated 01/15/2009, signed and sealed by Mark A. de Stefano, P.E.

D. QUALITY ASSURANCE

1. Miami-Dade Department of Regulatory and Economic Resources (RER)

E. MATERIAL CERTIFICATIONS

1. None.

F. STATEMENTS

1. Statement letter of code conformance to 5th edition (2014) FBC issued by De Stefano Engineering Group PL, dated 11/06/2014, signed and sealed by Mark A. de Stefano, P.E.
2. Distributor agreement dated 12/12/2014.
3. No financial interest letter issued by De Stefano Engineering Group PL, dated 12/08/2008, signed and sealed by Mark A. de Stefano, P.E. *"Submitted under NOA # 08-1219.01"*

02/02/2015

Carlos M. Utrera, P.E.
Product Control Examiner
NOA No. 14-0708.07
Expiration Date: December 2, 2019
Approval Date: February 12, 2015

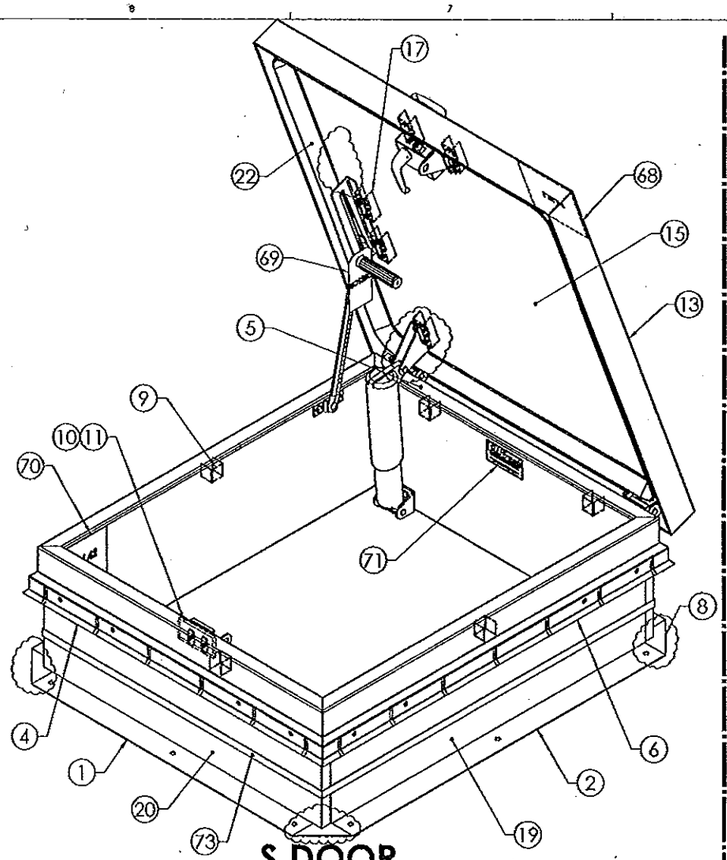

S DOOR

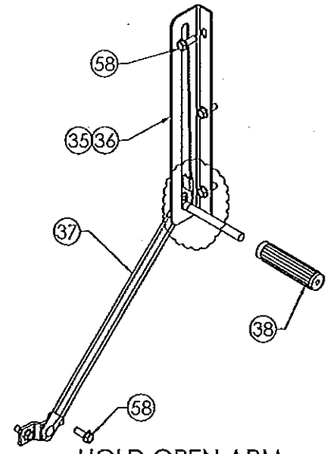

HOLD OPEN ARM

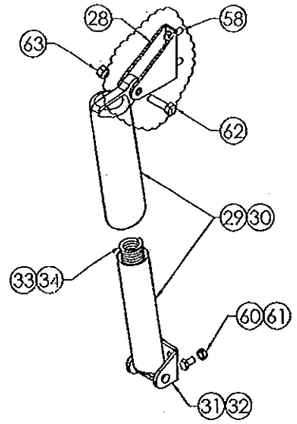

LIFTING MECHANISM

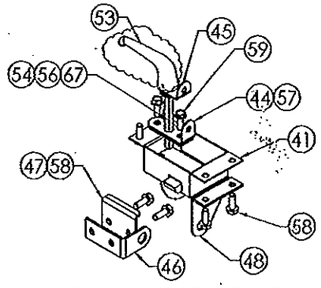

LOCK - SINGLE POINT

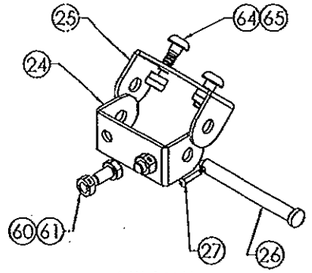

HINGE

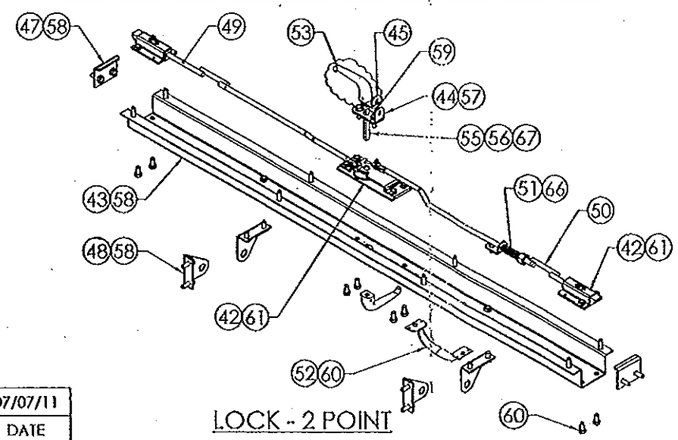

LOCK - 2 POINT

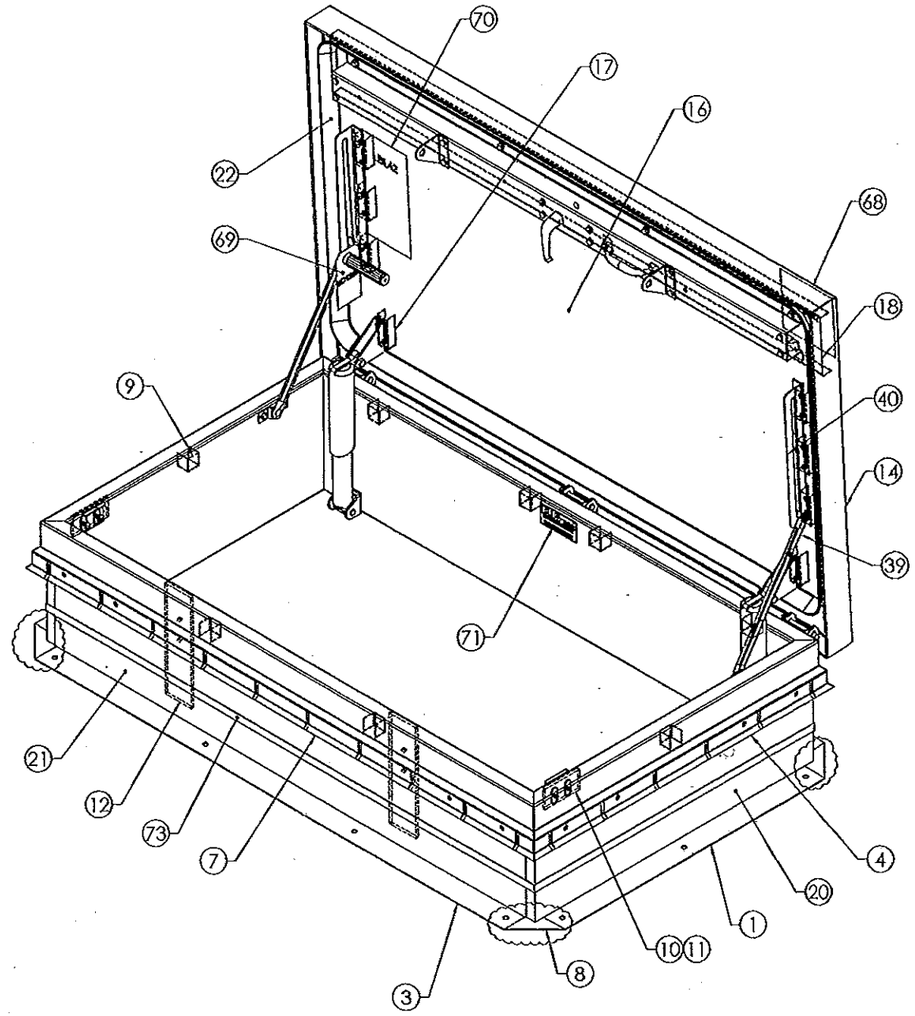

NB DOOR

NOTES:
1. THE DESIGN CONTAINED HEREIN HAS BEEN DESIGN AND TESTED IN ACCORDANCE WITH THE FLORIDA BUILDING CODE
2. THE SHORT TERM LOAD FACTOR HAS NOT BEEN USED.
3. ATTACHMENT TO STRUCTURE SHALL MEET THE FOLLOWING ALLOWABLE LOAD CONDITIONS. THE VALUES PROVIDED ASSUME THE ATTACHMENT DIRECTLY TO THE STRUCTURAL ELEMENTS WITHOUT SPACE. ALLOWABLE MINIMUM LOAD VALUES PULLOUT: 185 LBS. SHEAR: 90 LBS. USE THE FASTENER MANUFACTURES RECOMMENDED SAFETY FACTORS. IF DIFFERENT CONDITIONS EXIST PLEASE CONTACT BILCO OR A FLORIDA LICENSED ENGINEER FOR CONSULTATION.
4. ALL LABELS TO BE LOCATED IN APPROXIMATE LOCATIONS AS SHOWN.

Design Pressure Rating	Impact Rating
+/- 70 PSF	Large and Small Missile Impact

REV.	DESCRIPTION	BY	DATE
X4	S COVER BLANK, HOLD OPEN ARM, SPRING EARS & LOADS, LABELS, LOCK HANDLE	DJC	07/07/11

UNLESS OTHERWISE SPECIFIED:
UNLESS OTHERWISE SPECIFIED REMOVE ALL BURRS & SHARP CORNERS
DIMENSION TOLERANCES
.XXX +/- .010
.XX +/- .015
.X +/- .030
ANGLES +/- 2°
FRACTIONS +/- 1/32
INTERPRET GEOMETRIC TOLERANCING PER:
MATERIAL
FINISH
DO NOT SCALE DRAWING

	NAME/#	DATE
DRAWN	CID	10/15/09
ORG. AUTHOR	CID	
ORG. ECR	23431	
Q.A.		

3RD-ANGLE PROJECTION

THE BILCO COMPANY
P.O. Box 1203 New Haven, Connecticut 06505
(203) 934-6363 Fax (203) 933-8478
www.bilco.com e-mail: bilco@bilco.com

TITLE: S/NB DOOR ASSY

SIZE	DWG. NO.	REV
B	S/NB DOOR ASSY	X4

SCALE: 1:6 WEIGHT: SHEET 1 OF 10

MARK A. de STEFANO
LICENSE
No 61657
STATE OF
FLORIDA
PROFESSIONAL ENGINEER

DE STEFANO
ENGINEERING GROUP, PL
1800 Second Street, Ste. 712 Ph: (941)371-1724
Sarasota Florida 34236 Fax:(941)847-0870
Email: MarkD@DeStefanoEngineering.com
Website: www.DeStefanoEngineering.com
Certificate of Authorization Number 27383
MARK A. DE STEFANO, PE
FL. REGISTRATION # 61657

PRODUCT REVISED
as complying with the Florida Building Code
Acceptance No 11-0722.10
Expiration Date 12/02/2014
By
Miami Dade Product Control

PRODUCT RENEWED
as complying with the Florida Building Code
Acceptance No 14-0708.07
Expiration Date 12/02/2019
By
Miami Dade Product Control

ITEM NO.	PART NO.	DESCRIPTION	NB-20	S-20
		FRAME		
KEY>1	SD504A	FRM-RS 30" GALV. FORMED, SEE SHEET 8	2	2
KEY>2	SD505A	FRM-RS 36" GALV. FORMED, SEE SHEET 8	-	2
KEY>3	SD513	FRM-RS FORMED STEEL 54", SEE SHEET 8	2	-
KEY>4	SD506	FLASHING-RS FORMED STEEL 30", SEE SHEET 9	2	1
KEY>5	SD506P	FLASHING-RS FORMED STEEL 30", SEE SHEET 9	-	1
KEY>6	SD507	FLASHING-RS TYPE "S" GALV FORMED 36", SEE SHEET 9	-	2
KEY>7	SD524	FLASHING-RS FORMED STEEL 54", SEE SHEET 9	2	-
KEY>8	SD1649	FRM-CORNER STANDARD GALV.	4	4
KEY>9	SD15	SPACER-FRAME & FLASHING STEEL	8	5
10	SD165	NUT-WELD, 5/16-18 STEEL	4	2
11	SD159AL	BUP-1/4" X 2" X 4" ALUM	4	2
12	SD536	PLATE-REINF 1/4" X 3" X 11" ALUM	2	-
		COVER		
KEY>13	SD502	CVR-RS 3", 48 1/2" X 42" STEEL, SEE SHEET 10	-	1
KEY>14	SD511E	CVR-RS 3", 46" X 68 3/4" STEEL, SEE SHEET 10	1	-
KEY>15	SD521	LINER-CVR RS 41 1/4" X 34 3/4" STEEL, SEE SHEET 10	-	1
KEY>16	SD512	LINER-CVR NB 2PT LOCK STEEL, SEE SHEET 10	1	-
KEY>17	SD36	SPACER-COVER 1" STEEL, SEE SHEET 10	8	5
KEY>18	SD527	STIFFENER-COVER NB 2PT FORMED STEEL, SEE SHEET 10	1	-
		INSULATION & GASKET		
19	SD16-2	FIBERBOARD 1" X 9 1/2" X 36 1/4"	-	2
20	SD16-1	FIBERBOARD 1" X 9 1/2" X 32"	2	2
21	SD16-3	FIBERBOARD 1" X 9 1/2" X 54 1/4"	2	-
22	SD4026	GASKET-EPDM	15 FT	11 FT
* 23	SD2	FIBERGLASS COVER INSULATION	15 SQ FT	11 SQ FT
		HINGE		
24	SD14-P	HINGE-RS FRAME PLATED	3	2
25	SD13-P	HINGE-RS COVER PLATED	3	2
26	SD12-Y	PIN-HINGE 3/8" X 3 1/2", .368/.374 DIA., PLATED	3	2
27	SD96A	RIVET-HINGE PIN 1/8" DIA. STEEL	3	2
		LIFTING MECHANISM		
28	SD685	BRACKET-SPRING HOUSING, PLATED	2	1
29	SD4100-1	TUBES-SMALL LIFT MECH. ASSM COMP.	2	-
30	SD4101-1	TUBES-LARGE LIFT MECH. ASSM COMP.	-	1
31	SD4083-W	BRACKET-SPRING SM W/PIN	2	-
32	SD4086-W	BRACKET-SPRING LG W/PIN	-	1
33	SD20	SPRING-180#	2	-
34	SD65	SPRING-360#	-	1
		HOLD OPEN & GUIDE ARMS		
35	SD548L	BRACKET-ARM, 14 1/4" & 18 7/8" W/ DETENT LH PLATED	1	-
36	SD562L	BRACKET-ARM, 70°, 14 1/4" W/ DETENT LH PLATED	-	1
37	SD3445-P	HOA-RS LH PLATED, 14 1/4"	1	1
38	SD4	HANDLE-GRIP RED VINYL G-2R7	1	1
39	SD4820-P	GUIDE-ARM RS 14 1/4" ASSM PLATED	1	-
40	SD1-P	BRACKET-GUIDE ARM FORMED PLATED	1	-

ITEM NO.	PART NO.	DESCRIPTION	NB-20	S-20
		LOCK		
41	SD41-2	LOCK-BOX SINGLE PT. ASSM PLATED	-	1
42	SD66XNB	LOCK-HANSEN 2 POINT ASSM STEEL	1	-
43	PR0071	NB-20 LOCK BOX FORMED STEEL	1	-
44	SD24-P	HASP-PADLOCK COVER PLATED	1	1
45	SD25-P	HASP-PADLOCK HANDLE PLATED	2	1
46	SD49A-P	HASP-PADLOCK PLATED	-	1
47	SD49B-P	STRIKE-PADLOCK PLATED	2	1
48	SD50-P	HASP-RS COVER PLATED	4	1
49	SD66-3	ROD-THREADED CTL 3/8-16 X 6" STEEL	2	-
50	SD518-1	ROD-3/8-16 X 10"	2	-
51	SD519	SPRING-HELPER 7/16"x2" STEEL	1	-
52	SD86-P	HANDLE-GRIP PLATED	2	-
53	SD112	HANDLE-DIE CAST RS ZAMAK	2	2
54	SD31	LOCK-SHAFT 5/16" SQ X 4 5/8" PLATED	-	1
55	SD62	LOCK-SHAFT 5/16" SQ X 4 15/16" PLATED	1	-
56	SD26	PIN-RS HANDLE LOCK STEEL	2	2
57	SD30	GASKET-COVER HASP	1	1
		HARDWARE		
58	SD3-Y	SCREW-TAPTITE 5/16-18 X 7/8" YELLOW CHRMT	31	13
59	SD3-1-Y	SCREW-TAPTITE LOW 5/16-18 X 7/8" YELLOW CHRMT	1	1
60	SD27-Y	SCREW-HHCS 5/16-18 X 5/8" YELLOW CHRMT	24	6
61	SD18-Y	NUT-HEX LOCK 5/16-18 YELLOW CHRMT	24	6
62	SD234	BOLT-HH STOP THREAD 3/8-16 X 1 3/8" YELLOW CHRMT	2	1
63	SD185-Y	NUT-HEX LOCK 3/8-16 YELLOW CHRMT	2	1
64	SD94-Y	AVDEL-BOLT 2621-1004 YELLOW CHRMT	6	4
65	SD95-Y	AVDEL-COLLAR HUCKBOLT YELLOW CHRMT	6	4
66	SD196	NUT-HEX 1/2-13 PLATED	1	-
67	SD29-A-Y	WASHER-FLAT .469 ID X .922 OD X .065 YELLOW CHRMT	5	5
		LABELS & MISC.		
68	LBL41	LABEL-BIL CLIP/INSTALL INSTRUCTIONS	1	1
69	SD129C	TAG-HOA ENGLISH & FRENCH	1	1
70	LBL42	LABEL-OPERATION & MAINTENANCE	1	1
71	LBL520	LABEL-SERIAL NUMBER, PATENTS	1	1
* 72	SD1030	RED OXIDE PRIMER	A/R	A/R
73	SD125	3/4" FIBERGLASS TAPE	15 FT	12 FT
* 74	SD1901	GREASE-SHELL ALVANIA EP2	A/R	A/R

* NOT SHOWN ON ASSEMBLY

NOTE: S-20 & NB-20 STEEL VERSION SHOWN

FOR S-20 & NB-20 ALUMINUM VERSION, THE ITEM NUMBERS WITH KEY> INDICATOR SYMBOL INCREASE IN MATERIAL THICKNESS FROM .075" TO .090"

REV.	DESCRIPTION	BY	DATE
X4	S COVER BLANK, HOLD OPEN ARM, SPRING EARS & LOADS, LABELS, LOCK HANDLE	DJC	07/07/11

UNLESS OTHERWISE SPECIFIED:
UNLESS OTHERWISE SPECIFIED REMOVE ALL BURRS & SHARP CORNERS
DIMENSION TOLERANCES
.XXXX +/- .010
.XXX +/- .015
.XX +/- .030
ANGLES +/- 2°
FRACTIONS +/- 1/32
INTERPRET GEOMETRIC TOLERANCING PER:
MATERIAL
FINISH
DO NOT SCALE DRAWING

	NAME/#	DATE
DRAWN	CTD	10/15/09
ORG. AUTHOR	CTD	
ORG. ECR	23431	
Q.A.		

3RD-ANGLE PROJECTION

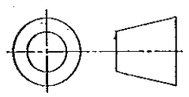

THE BILCO COMPANY
P.O. Box 1203 New Haven, Connecticut 06505
(203) 934-6363 Fax (203) 933-8478
www.bilco.com e-mail: bilco@bilco.com

TITLE: S/NB DOOR ASSY

SIZE B | DWG. NO. S/NB DOOR ASSY | REV X4

SCALE: 1:6 | WEIGHT: | SHEET 2 OF 10

MARK A. de STEFANO LICENSE No 61657 STATE OF FLORIDA PROFESSIONAL ENGINEER

DE STEFANO ENGINEERING GROUP, PL
1800 Second Street, Ste. 712 Ph: (941)371-1724
Sarasota Florida 34236 Fax:(941)847-0870
Email: MarkD@DeStefanoEngineering.com
Website: www.DeStefanoEngineering.com
Certificate of Authorization Number 27383
MARK A. DE STEFANO, PE
FL. REGISTRATION # 61657

PRODUCT REVISED
as complying with the Florida Building Code
Acceptance No 11-0722.10
Expiration Date 12/02/2014
By
Miami Dade Product Control

PRODUCT RENEWED
as complying with the Florida Building Code
Acceptance No 14-0708.07
Expiration Date 12/02/2019
By
Miami Dade Product Control

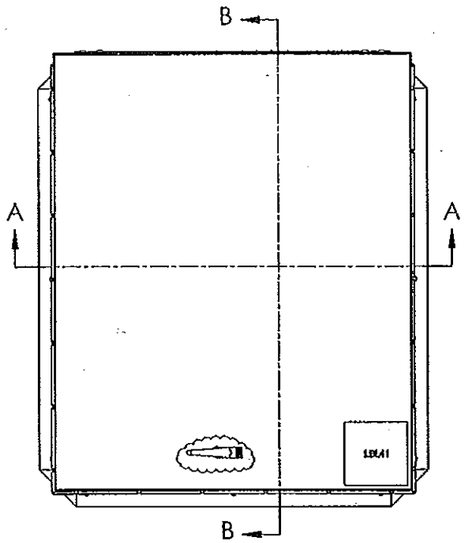

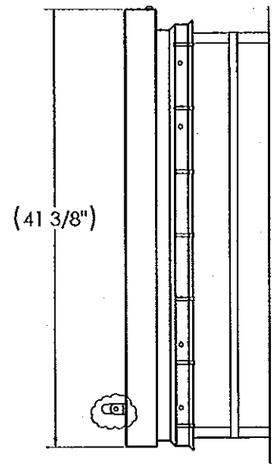

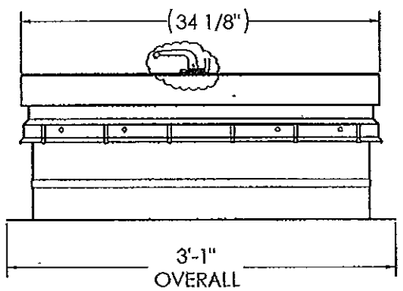

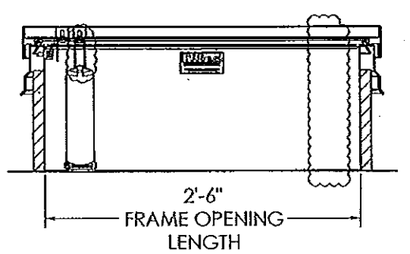

SECTION A-A

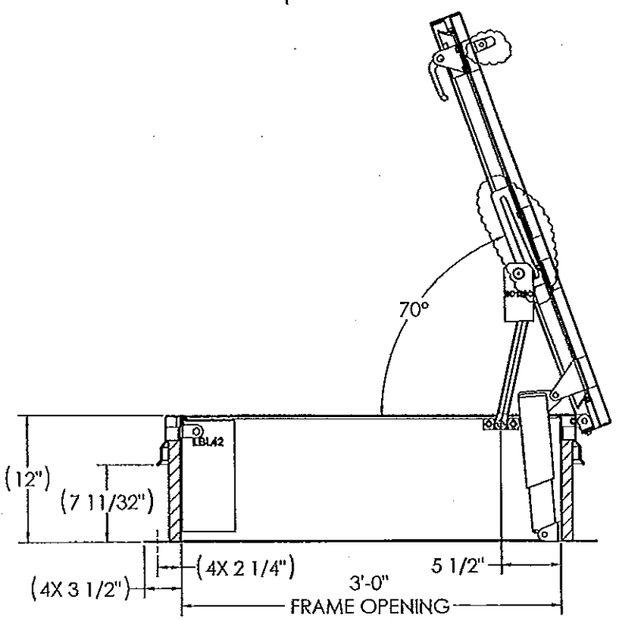

SECTION B-B
OPEN POSITION

"S" DOOR

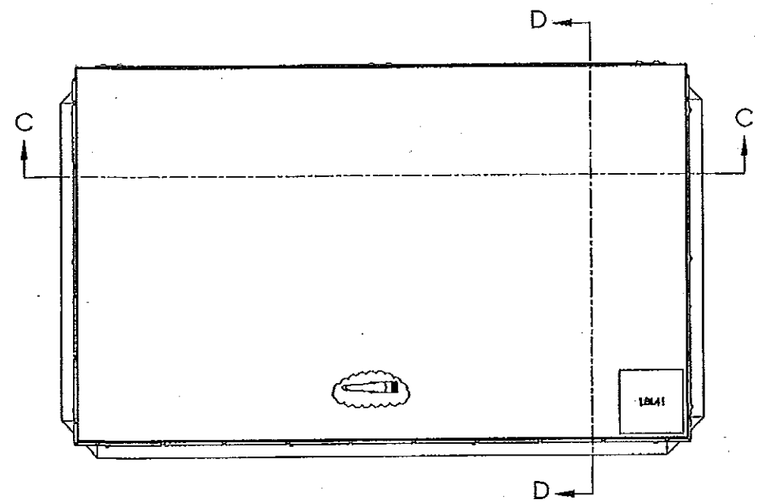

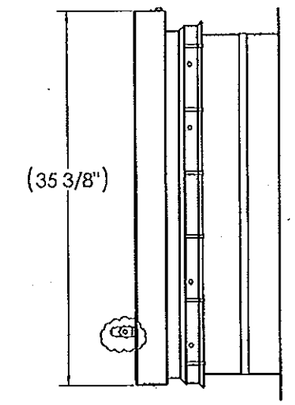

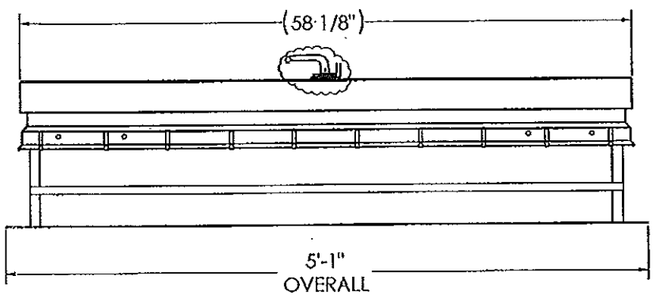

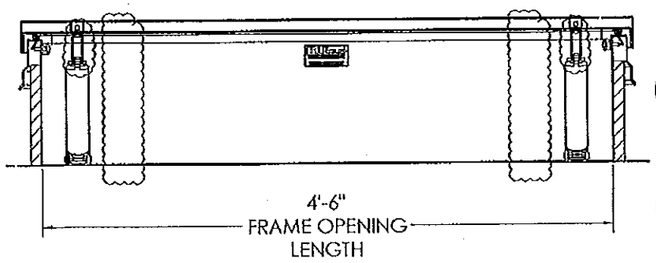

SECTION C-C

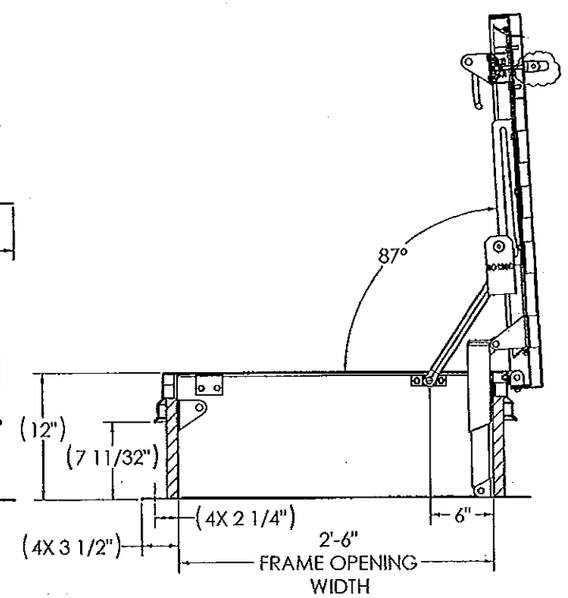

SECTION D-D
OPEN POSITION

"NB" DOOR

REV.	DESCRIPTION	BY	DATE
X4	S COVER BLANK, HOLD OPEN ARM, SPRING EARS & LOADS, LABELS, LOCK HANDLE	DJC	07/07/11

UNLESS OTHERWISE SPECIFIED:
UNLESS OTHERWISE SPECIFIED REMOVE ALL BURRS & SHARP CORNERS
DIMENSION TOLERANCES
X.XXX +/- .010
X.XX +/- .015
X.X +/- .030
ANGLES +/- 2°
FRACTIONS +/- 1/32
INTERPRET GEOMETRIC TOLERANCING PER:
MATERIAL
FINISH
DO NOT SCALE DRAWING

	NAME/#	DATE
DRAWN	CTD	10/15/09
ORG. AUTHOR	CTD	
ORG. ECR	23431	
Q.A.		

3RD-ANGLE PROJECTION

THE BILCO COMPANY
P.O. Box 1203 New Haven, Connecticut 06505
(203) 934-6363 Fax (203) 933-8478
www.bilco.com e-mail: bilco@bilco.com

TITLE: S/NB DOOR ASSY

SIZE	DWG. NO.	REV
B	S/NB DOOR ASSY	X4

SCALE: 1:7 WEIGHT: SHEET 3 OF 10

MARK A. de STEFANO
LICENSE
No 61657
STATE OF
FLORIDA
PROFESSIONAL ENGINEER

DE STEFANO
ENGINEERING GROUP, PL
1800 Second Street, Ste. 712 Ph: (941)371-1724
Sarasota Florida 34236 Fax:(941)847-0870
Email: MarkD@DeStefanoEngineering.com
Website: www.DeStefanoEngineering.com
Certificate of Authorization Number 27383

MARK A. DE STEFANO, PE
FL. REGISTRATION # 61657

PRODUCT REVISED
as complying with the Florida Building Code
Acceptance No 11-0722.10
Expiration Date 12/02/2014
By
Miami Dade Product Control

PRODUCT RENEWED
as complying with the Florida Building Code
Acceptance No 14-0708.07
Expiration Date 12/02/2019
By
Miami Dade Product Control

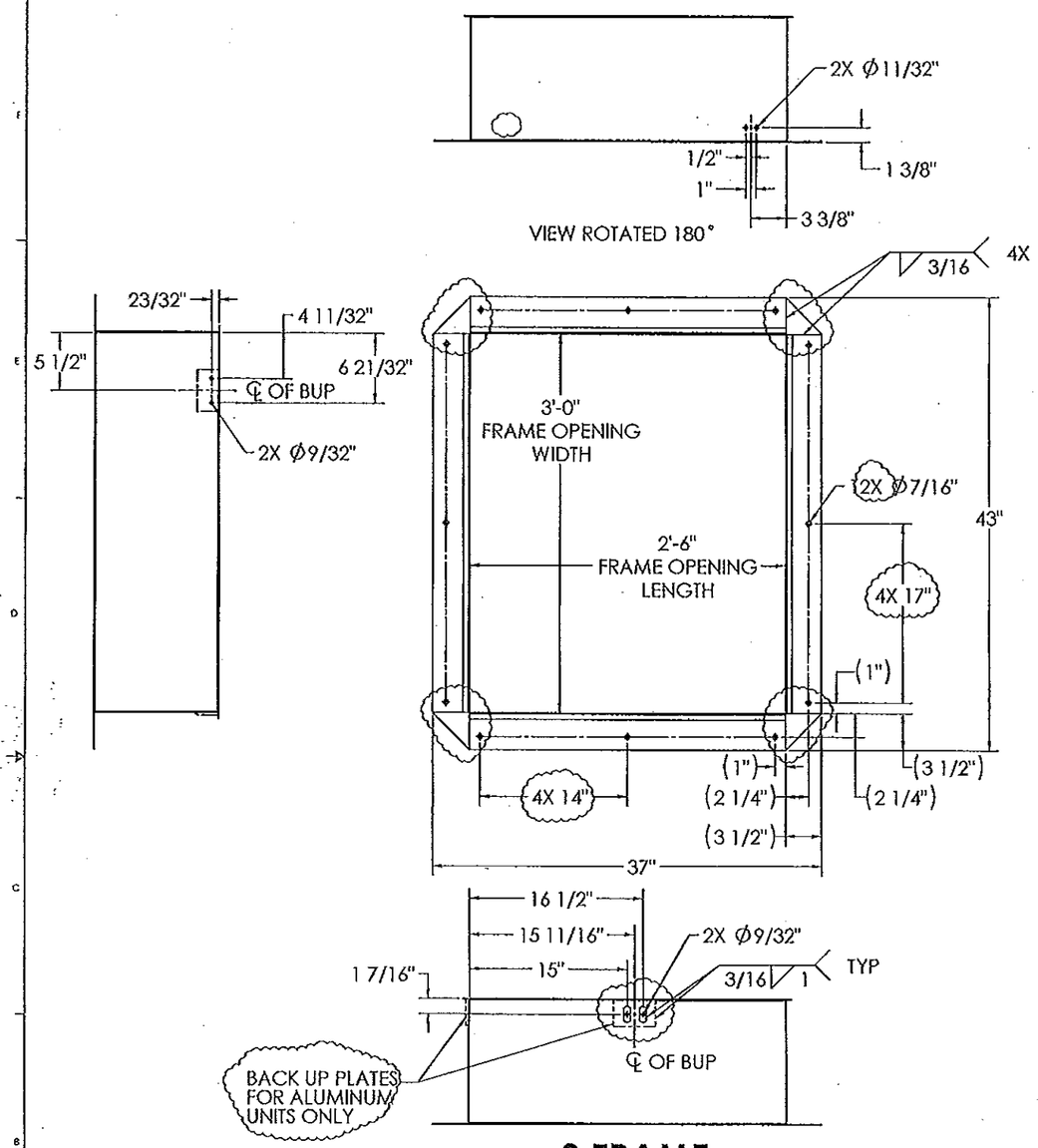

S FRAME

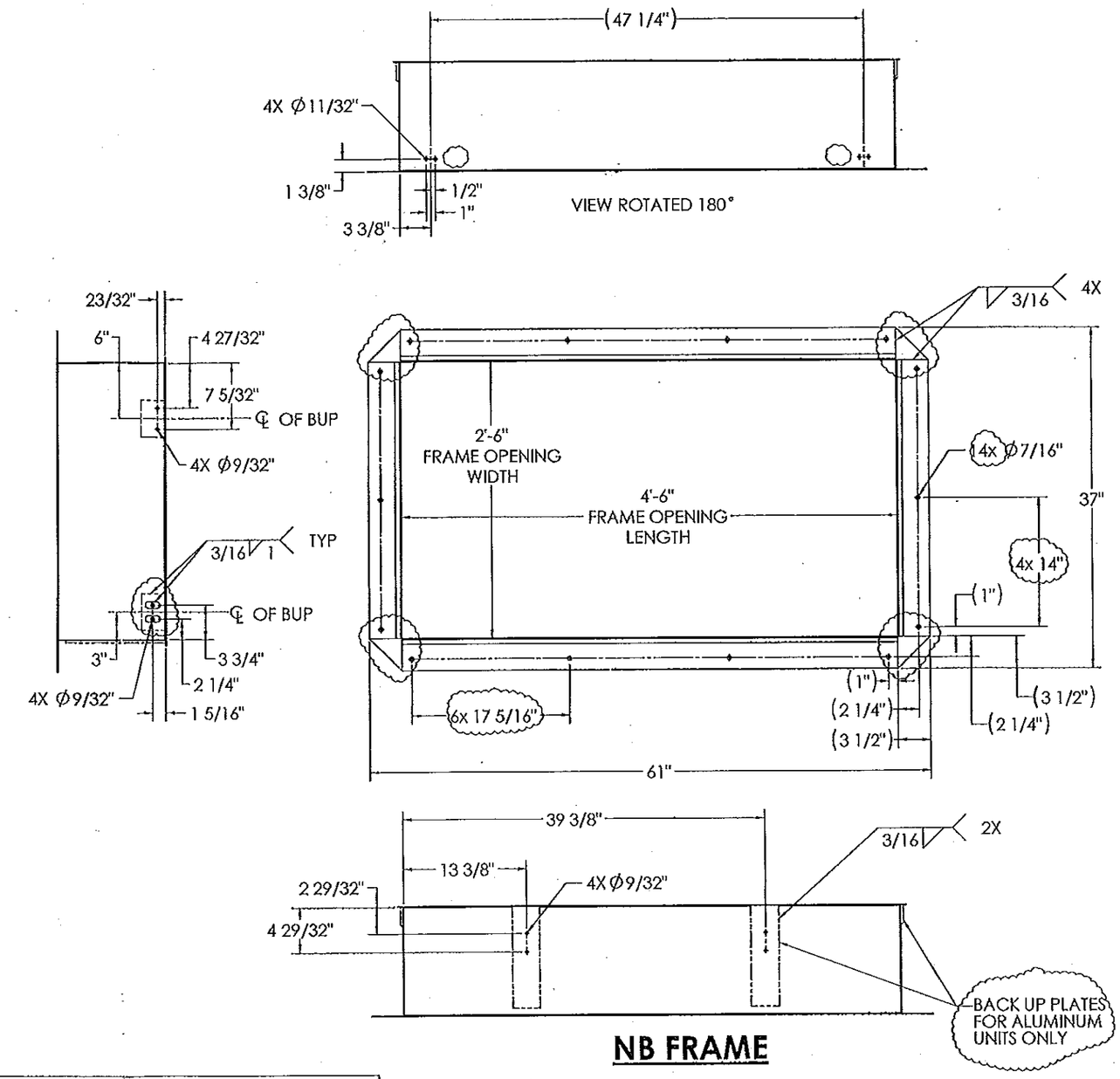

NB FRAME

REV.	DESCRIPTION	BY	DATE
X4	S COVER BLANK, HOLD OPEN ARM, SPRING EARS & LOADS, LABELS, LOCK HANDLE	DJC	07/07/11

UNLESS OTHERWISE SPECIFIED:
UNLESS OTHERWISE SPECIFIED REMOVE ALL BURRS & SHARP CORNERS
DIMENSION TOLERANCES
x.xxx +/- .010
x.xx +/- .015
x.x +/- .030
ANGLES +/- 2°
FRACTIONS +/- 1/32

INTERPRET GEOMETRIC TOLERANCING PER:

MATERIAL

FINISH

DO NOT SCALE DRAWING

	NAME/#	DATE
DRAWN	CID	10/15/09
ORG. AUTHOR	CID	
ORG. ECR	23431	
Q.A.		

3RD-ANGLE PROJECTION

THE BILCO COMPANY
P.O. Box 1203 New Haven, Connecticut 06505
(203) 934-6363 Fax (203) 933-8478
www.bilco.com e-mail: bilco@bilco.com

TITLE: S/NB DOOR ASSY

SIZE	DWG. NO.	REV
B	S/NB DOOR ASSY	X4

SCALE: 1:7 WEIGHT: SHEET 4 OF 10

MARK A. de STEFANO
LICENSE
No 61657
STATE OF
FLORIDA
PROFESSIONAL ENGINEER

DE STEFANO
ENGINEERING GROUP, PL
1800 Second Street, Ste. 712 Ph: (941)371-1724
Sarasota Florida 34236 Fax:(941)847-0870
Email: MarkD@DeStefanoEngineering.com
Website: www.DeStefanoEngineering.com
Certificate of Authorization Number 27383

MARK A. DE STEFANO, PE
FL. REGISTRATION # 61657

PRODUCT REVISED
as complying with the Florida Building Code
Acceptance No 11-0722.10
Expiration Date 12/02/2014
By
Miami Dade Product Control

PRODUCT RENEWED
as complying with the Florida Building Code
Acceptance No 14-0708.07
Expiration Date 12/02/2019
By
Miami Dade Product Control

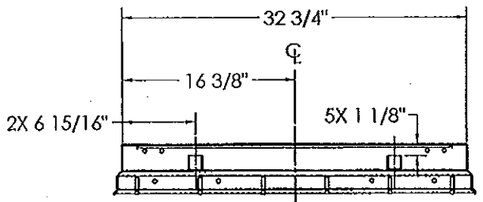

SECTION E-E

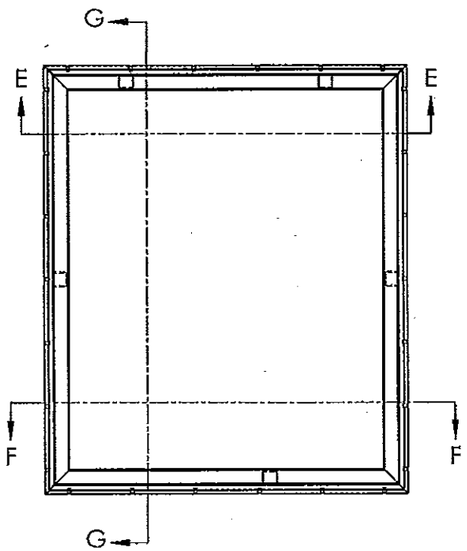

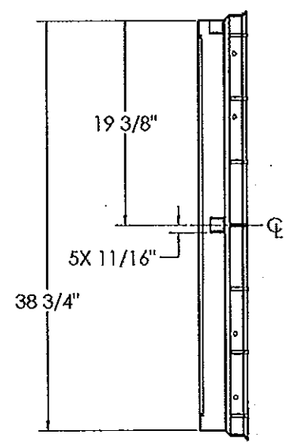

SECTION G-G

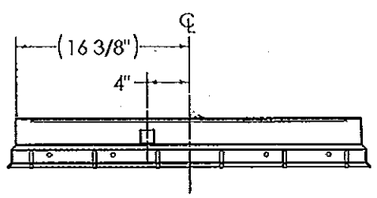

SECTION F-F

S FLASHING

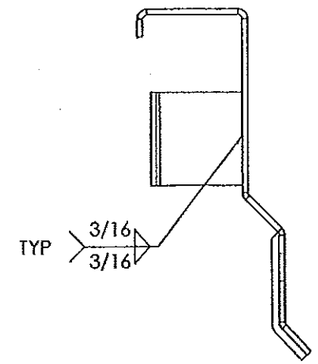

FLASHING SIDE VIEW

NOTE: DIMENSIONS ARE MEASURED FROM THIS TYPICAL SURFACE FOR FLASHING

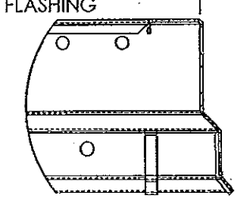

FLASHING FRONT VIEW

FLASHING COMMON VIEWS

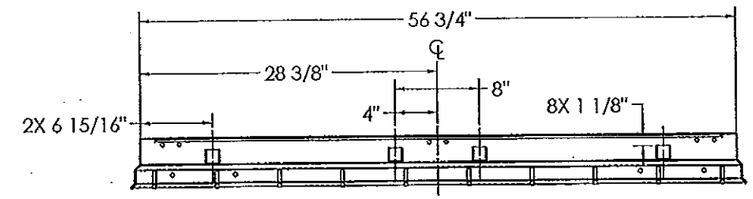

SECTION H-H

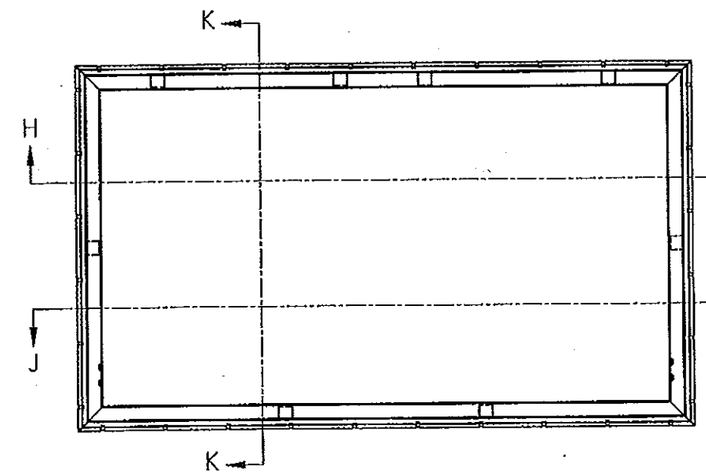

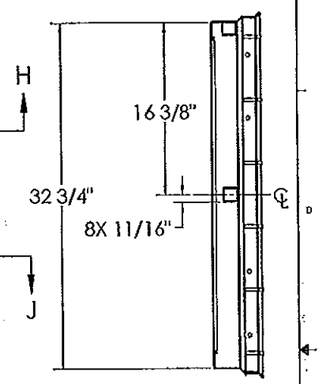

SECTION K-K

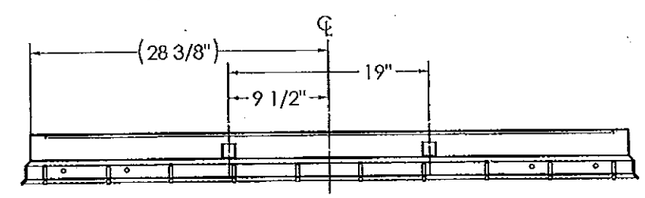

SECTION J-J

NB FLASHING

REV.	DESCRIPTION	BY	DATE
X4	S COVER BLANK, HOLD OPEN ARM, SPRING EARS & LOADS, LABELS, LOCK HANDLE	DJC	07/07/11

UNLESS OTHERWISE SPECIFIED:
UNLESS OTHERWISE SPECIFIED REMOVE ALL BURRS & SHARP CORNERS
DIMENSION TOLERANCES
XXXX +/- .010
XXX +/- .015
XX +/- .030
ANGLES +/- 2°
FRACTIONS +/- 1/32
INTERPRET GEOMETRIC TOLERANCING PER:
MATERIAL
FINISH
DO NOT SCALE DRAWING

	NAME/#	DATE
DRAWN	CTD	10/15/09
ORG. AUTHOR	CTD	
ORG. ECR	23431	
Q.A.		

3RD-ANGLE PROJECTION

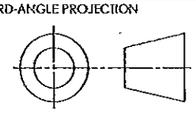

THE BILCO COMPANY
P.O. Box 1203 New Haven, Connecticut 06505
(203) 934-6363 Fax (203) 933-8478
www.bilco.com e-mail: bilco@bilco.com

TITLE: S/NB DOOR ASSY

SIZE	DWG. NO.	REV
B	S/NB DOOR ASSY	X4
SCALE: 1:7	WEIGHT:	SHEET 5 OF 10

MARK A. de STEFANO
LICENSE
No 61657
STATE OF FLORIDA
PROFESSIONAL ENGINEER

DE STEFANO ENGINEERING GROUP, PL
1800 Second Street, Sto. 712 Ph: (941)371-1724
Sarasota Florida 34236 Fax:(941)847-0870
Email: MarkD@DeStefanoEngineering.com
Website: www.DeStefanoEngineering.com
Certificate of Authorization Number 27383

MARK A. DE STEFANO, PE
FL. REGISTRATION # 61657

PRODUCT REVISED
as complying with the Florida Building Code
Acceptance No 11-0722.10
Expiration Date 12/02/2014
By
Miami Dade Product Control

PRODUCT RENEWED
as complying with the Florida Building Code
Acceptance No 14-0708.07
Expiration Date 12/02/2019
By
Miami Dade Product Control

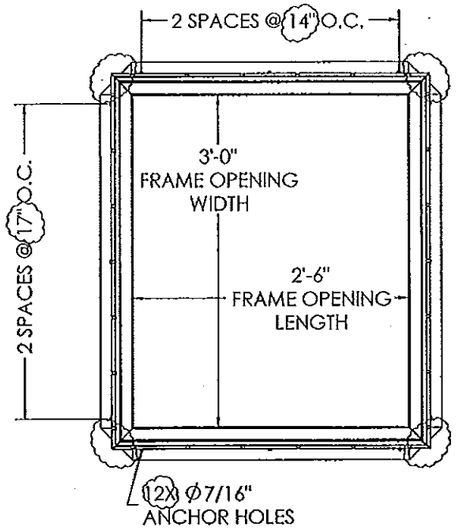

S ANCHOR LAYOUT

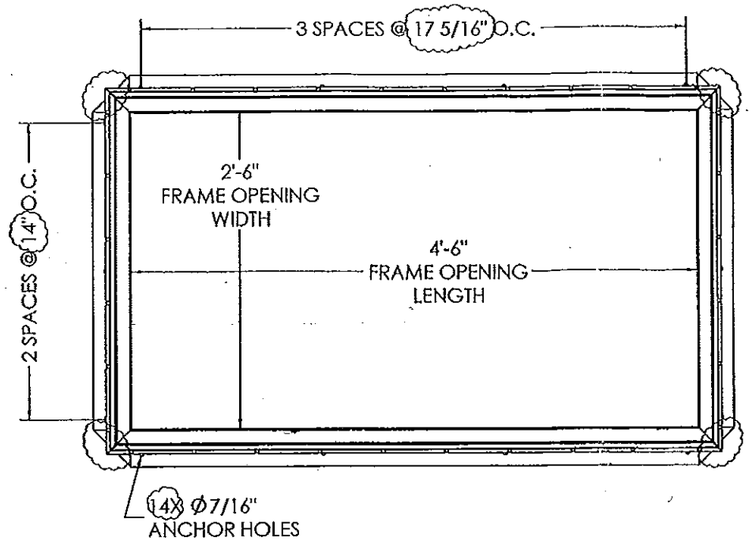

NB ANCHOR LAYOUT

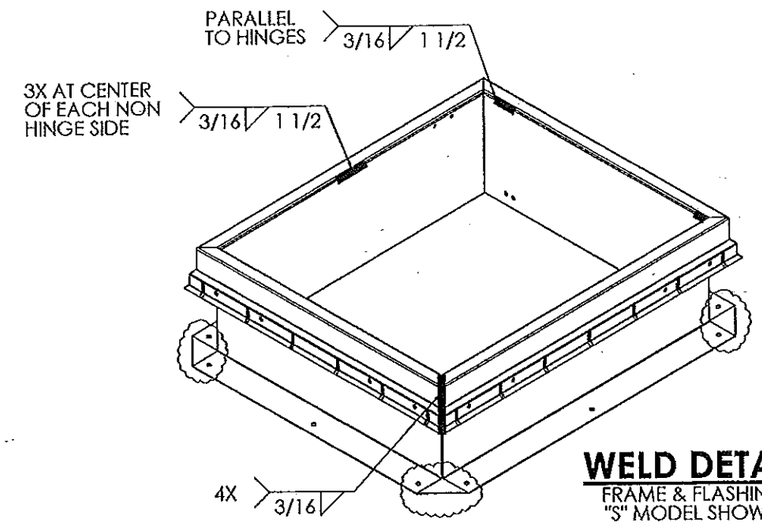

WELD DETAIL

FRAME & FLASHING
"S" MODEL SHOWN

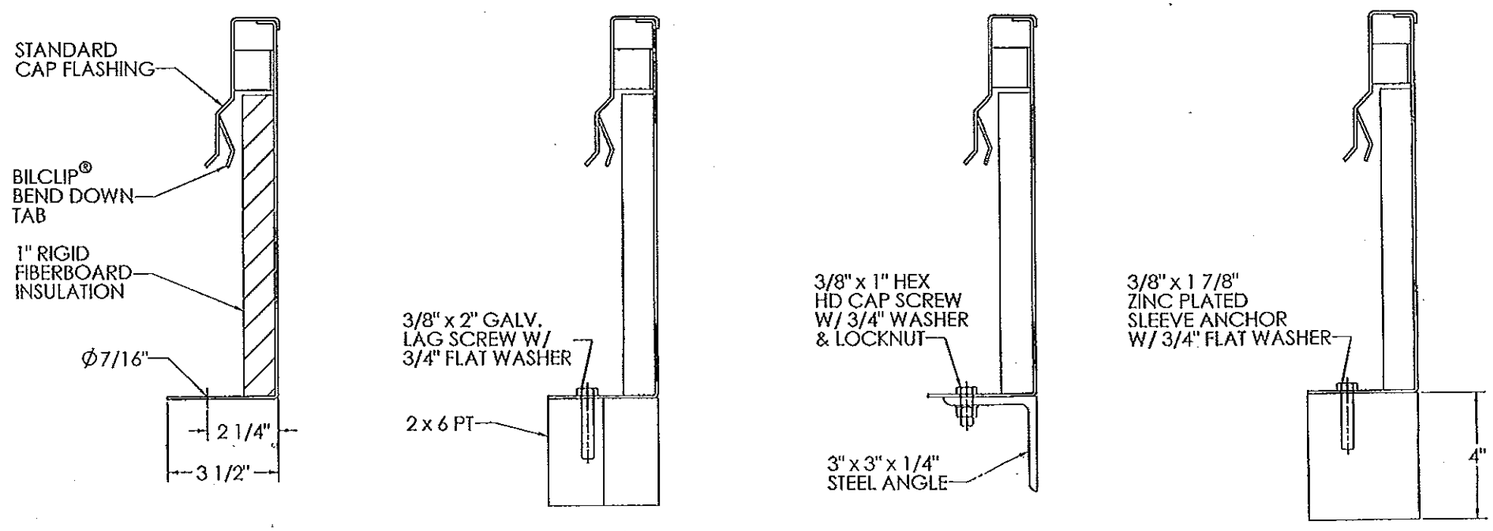

STANDARD 12" CURB | WOOD CURB | STEEL CURB | CONCRETE CURB

ANCHORING OPTIONS

REV.	DESCRIPTION	BY	DATE
X4	S COVER BLANK, HOLD OPEN ARM, SPRING EARS & LOADS, LABELS, LOCK HANDLE	DJC	07/07/11

UNLESS OTHERWISE SPECIFIED:		NAME/#	DATE
UNLESS OTHERWISE SPECIFIED REMOVE ALL BURRS & SHARP CORNERS DIMENSION TOLERANCES x.xxx +/- .010 x.xx +/- .015 x.x +/- .030 ANGLES +/- 2° FRACTIONS +/- 1/32	DRAWN	CID	10/15/09
	ORG. AUTHOR	CID	
	ORG. ECR	23431	
INTERPRET GEOMETRIC TOLERANCING PER:	Q.A.		
MATERIAL	3RD-ANGLE PROJECTION		
FINISH			
DO NOT SCALE DRAWING			

THE BILCO COMPANY
P.O. Box 1203 New Haven, Connecticut 06505
(203) 934-6363 Fax (203) 933-8478
www.bilco.com e-mail: bilco@bilco.com

TITLE: S/NB DOOR ASSY

SIZE	DWG. NO.	REV
B	S/NB DOOR ASSY	X4

SCALE: 1:7 | WEIGHT: | SHEET 6 OF 10

MARK A. de STEFANO
LICENSE
No 61657
STATE OF
FLORIDA
PROFESSIONAL ENGINEER

DE STEFANO
ENGINEERING GROUP, PL
1800 Second Street, Ste. 712 Ph: (941)371-1724
Sarasota Florida 34236 Fax:(941)847-0870
Email: MarkD@DeStefanoEngineering.com
Website: www.DeStefanoEngineering.com
Certificate of Authorization Number 27383
MARK A. DE STEFANO, PE
FL. REGISTRATION # 61657

PRODUCT REVISED
as complying with the Florida
Building Code
Acceptance No 11-0723.10
Expiration Date 12/02/2014
By
Miami Dade Product Control

PRODUCT RENEWED
as complying with the Florida
Building Code
Acceptance No 14-0708.07
Expiration Date 12/02/2019
By
Miami Dade Product Control

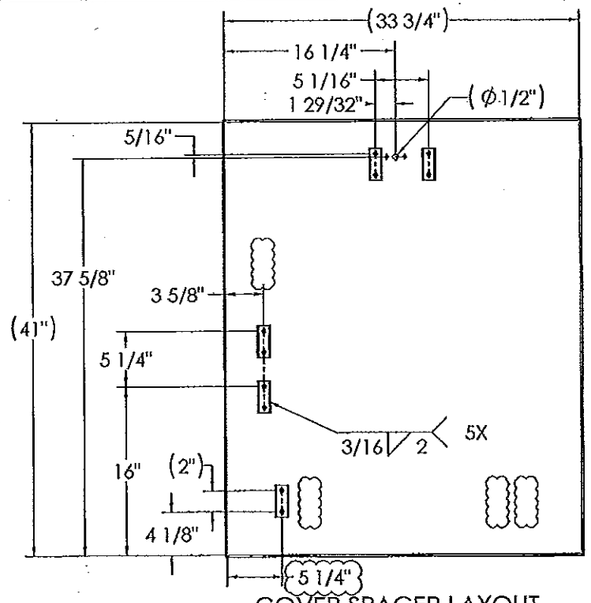

COVER SPACER LAYOUT

NOTE: WHEN LOCATING SD36 COVER SPACER AND EPDM GASKET, INSIDE DIMENSIONS ARE MEASURED FROM THIS TYPICAL SURFACE ON COVER.

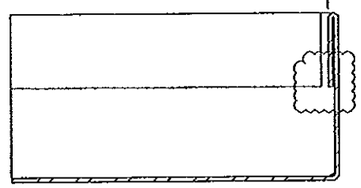

COVER END VIEW

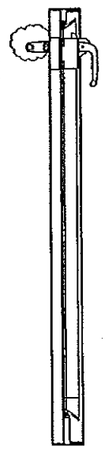

SECTION L-L

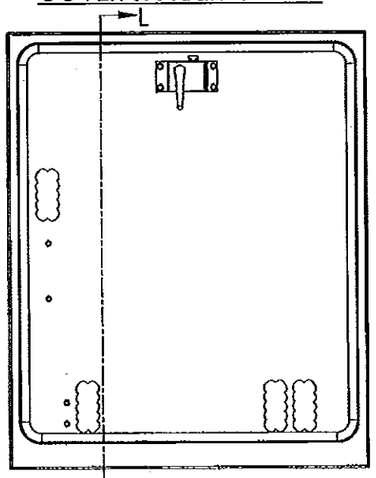

COVER LINER, GASKET & LOCK MOUNTING

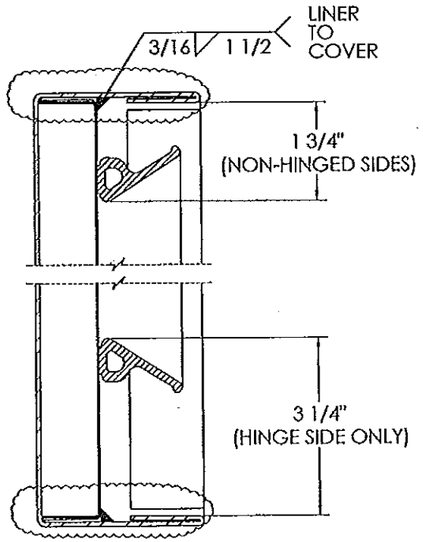

GASKET & LINER POSITIONS

S COVER

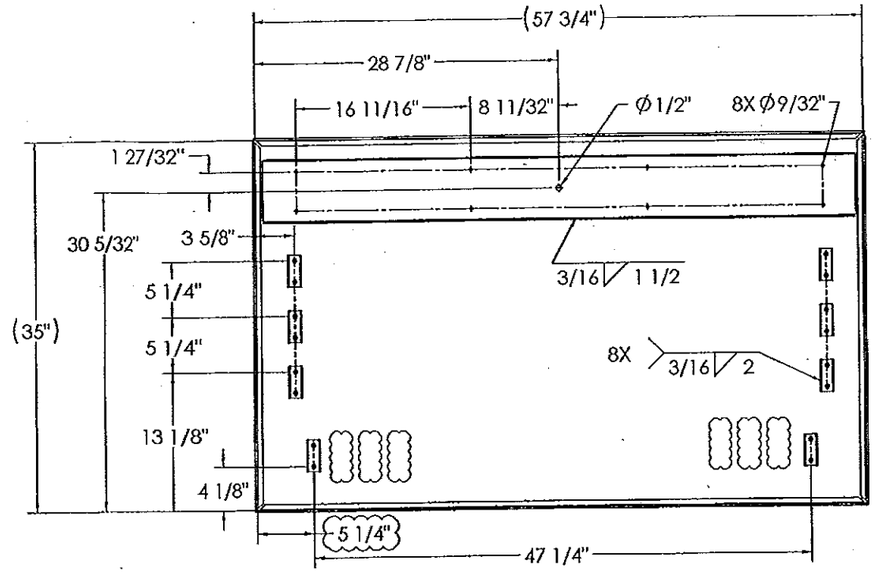

COVER SPACER LAYOUT

NOTE: WHEN LOCATING SD36 COVER SPACER AND EPDM GASKET, INSIDE DIMENSIONS ARE MEASURED FROM THIS TYPICAL SURFACE ON COVER.

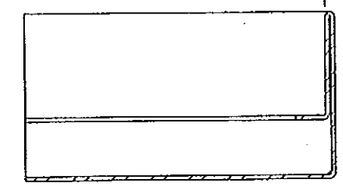

COVER END VIEW

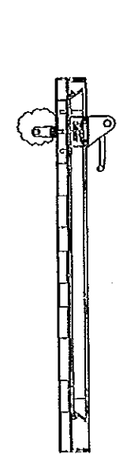

SECTION M-M

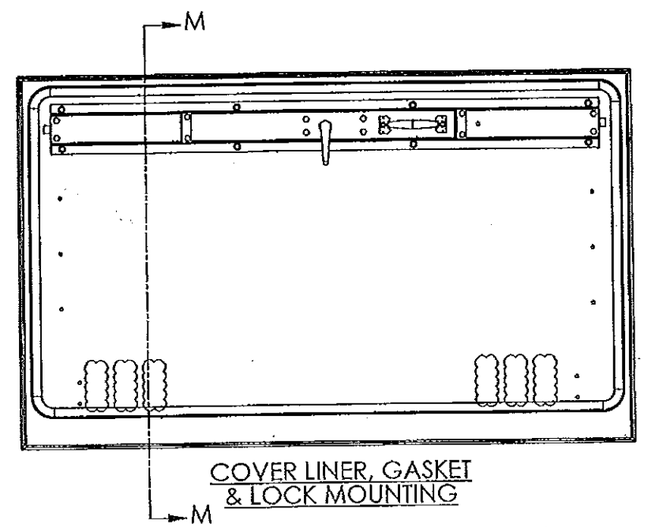

COVER LINER, GASKET & LOCK MOUNTING

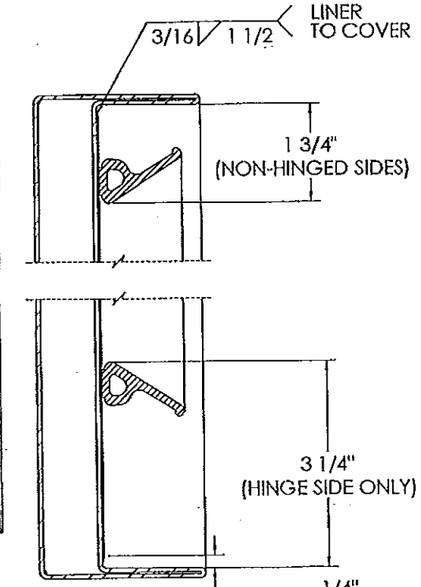

GASKET & LINER POSITIONS

NB COVER

REV.	DESCRIPTION	BY	DATE
X4	S COVER BLANK, HOLD OPEN ARM, SPRING EARS & LOADS, LABELS, LOCK HANDLE	DJC	07/07/11

UNLESS OTHERWISE SPECIFIED:
UNLESS OTHERWISE SPECIFIED REMOVE ALL BURRS & SHARP CORNERS
DIMENSION TOLERANCES
x.xxx +/- .010
x.xx +/- .015
x.x +/- .030
ANGLES +/- 2°
FRACTIONS +/- 1/32
INTERPRET GEOMETRIC TOLERANCING PER:
MATERIAL
FINISH
DO NOT SCALE DRAWING

	NAME/#	DATE
DRAWN	CID	10/15/09
ORG. AUTHOR	CID	
ORG. ECR	23431	
Q.A.		

3RD-ANGLE PROJECTION

THE BILCO COMPANY
P.O. Box 1203 New Haven, Connecticut 06505
(203) 934-6363 Fax (203) 933-8478
www.bilco.com e-mail: bilco@bilco.com

TITLE: S/NB DOOR ASSY

SIZE: B | DWG. NO.: S/NB DOOR ASSY | REV: X4

SCALE: 1:7 | WEIGHT: | SHEET 7 OF 10

MARK A. de STEFANO LICENSE No 61657 STATE OF FLORIDA PROFESSIONAL ENGINEER

DE STEFANO ENGINEERING GROUP, PL
1800 Second Street, Ste. 712 Ph: (941)371-1724
Sarasota Florida 34236 Fax:(941)847-0870
Email: MarkD@DeStefanoEngineering.com
Website: www.DeStefanoEngineering.com
Certificate of Authorization Number 27383
MARK A. DE STEFANO, PE
FL. REGISTRATION # 61657

PRODUCT REVISED
as complying with the Florida Building Code
Acceptance No 11-0722.10
Expiration Date 12/02/2014
By
Miami Dade Product Control

PRODUCT RENEWED
as complying with the Florida Building Code
Acceptance No 14-0708.07
Expiration Date 12/02/2019
By
Miami Dade Product Control

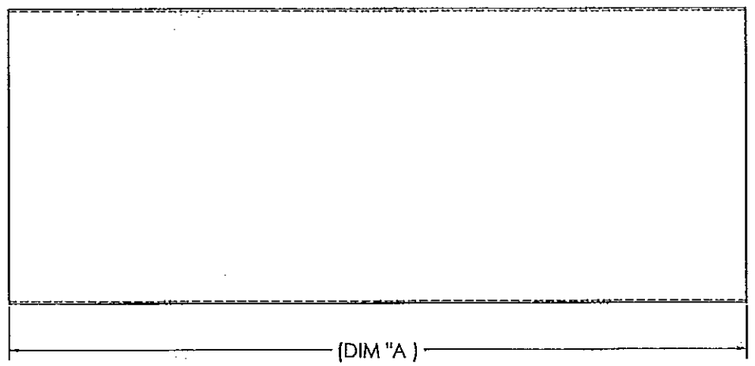

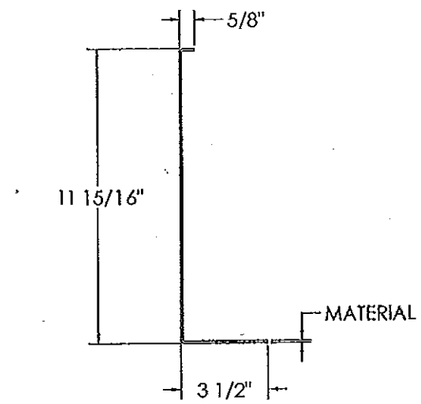

UNIT	PART NO.	MATERIAL	DIM "A"
S & NB	SD504A	14 GA. (.075") GALV STEEL	30"
S-DOOR	SD505A	14 GA. (.075") GALV STEEL	36"
S & NB	SD504A-AL	11 GA. (.090) 3003 H14 ALUM	30"
S-DOOR	SD505A-AL	11 GA. (.090) 3003 H14 ALUM	36"
NB-DOOR	SD513	14 GA. (.075") GALV STEEL	54"
NB-DOOR	SD513AL	11 GA. (.090") 3003 H14 ALUM	54"

FRAME

NOTES:

1. MATERIAL MUST BE ABLE TO BEND 180° BACK UPON ITSELF WITHOUT FRACTURE AND FLATNESS CRITICAL DIAGONAL MEASUREMENT IS ±1/32", CORNERS MUST BE 90°.

REV.	DESCRIPTION	BY	DATE
X4	S COVER BLANK, HOLD OPEN ARM, SPRING EARS & LOADS, LABELS, LOCK HANDLE	DJC	07/07/11

UNLESS OTHERWISE SPECIFIED:
UNLESS OTHERWISE SPECIFIED REMOVE ALL BURRS & SHARP CORNERS
DIMENSION TOLERANCES
XXXX +/- .010
XXX +/- .015
XX +/- .030
ANGLES +/- 2°
FRACTIONS +/- 1/32
INTERPRET GEOMETRIC TOLERANCING PER:
MATERIAL
FINISH
DO NOT SCALE DRAWING

	NAME/#	DATE
DRAWN	DMP	10/15/09
ORG. AUTHOR	DMP	
ORG. ECR	21665	
Q.A.		

3RD-ANGLE PROJECTION

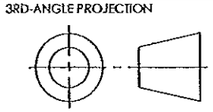

THE BILCO COMPANY
P.O. Box 1203 New Haven, Connecticut 06505
(203) 934-6363 Fax (203) 933-8478
www.bilco.com e-mail: bilco@bilco.com

TITLE: S/NB DOOR ASSY

SIZE	DWG. NO.	REV
B	S/NB DOOR ASSY	X4

SCALE: 1:3 WEIGHT: SHEET 8 OF 10

MARK A. de STEFANO LICENSE No 61657 STATE OF FLORIDA PROFESSIONAL ENGINEER

DE STEFANO ENGINEERING GROUP, PL
1800 Second Street, Ste. 712 Ph: (941)371-1724
Sarasota Florida 34236 Fax:(941)847-0870
Email: MarkD@DeStefanoEngineering.com
Website: www.DeStefanoEngineering.com
Certificate of Authorization Number 27383
MARK A. DE STEFANO, PE
FL. REGISTRATION # 61657

PRODUCT REVISED
as complying with the Florida Building Code
Acceptance No 11-0722.10
Expiration Date 12/02/2014
By
Miami Dade Product Control

PRODUCT RENEWED
as complying with the Florida Building Code
Acceptance No 14-0708.07
Expiration Date 12/02/2019
By
Miami Dade Product Control

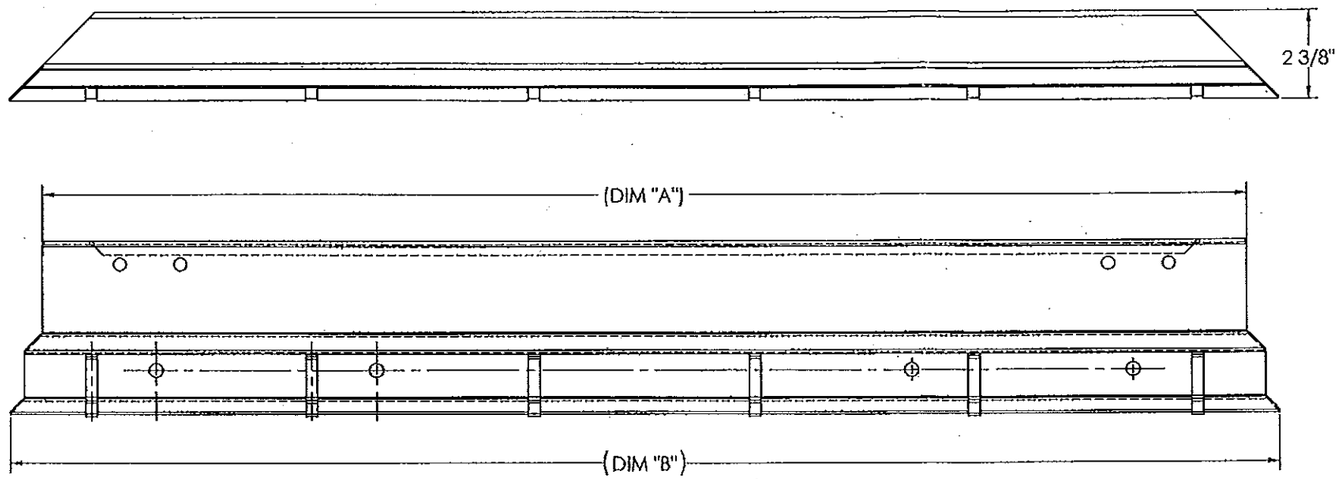

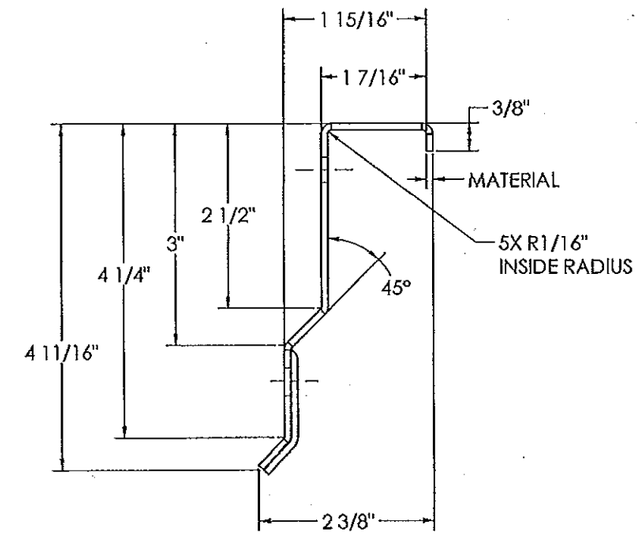

UNIT	PART NO.	MATERIAL	DIM "A"	DIM "B"
S-DOOR	SD506P	14 GA. (.075") GALV STEEL	32 11/16"	34 7/16"
S & NB	SD506	14 GA. (.075") GALV STEEL	32 11/16"	34 7/16"
S & NB	SD506ALP1	11 GA. (.090") 3003 H14 ALUM	32 11/16"	34 7/16"
S-DOOR	SD506AL1	11 GA. (.090") 3003 H14 ALUM	32 11/16"	34 7/16"
S-DOOR	SD507	14 GA. (.075") GALV STEEL	38 11/16"	40 7/16"
S-DOOR	SD507AL	11 GA. (.090") 3003 H14 ALUM	38 11/16"	40 7/16"
NB-DOOR	SD524P	14 GA. (.075") GALV STEEL	56 11/16"	58 7/16"
NB-DOOR	SD524	14 GA. (.075") GALV STEEL	56 11/16"	58 7/16"
NB-DOOR	SD524PAL	11 GA. (.090") 3003 H14 ALUM	56 11/16"	58 7/16"
NB-DOOR	SD524AL	11 GA. (.090") 3003 H14 ALUM	56 11/16"	58 7/16"

FLASHING

REV.	DESCRIPTION	BY	DATE
X4	S COVER BLANK, HOLD OPEN ARM, SPRING EARS & LOADS, LABELS, LOCK HANDLE	DJC	07/07/11

UNLESS OTHERWISE SPECIFIED:
UNLESS OTHERWISE SPECIFIED REMOVE ALL BURRS & SHARP CORNERS
DIMENSION TOLERANCES
XXXX +/- .010
XXX +/- .015
XX +/- .030
ANGLES +/- 2°
FRACTIONS +/- 1/32
INTERPRET GEOMETRIC TOLERANCING PER:
MATERIAL
FINISH
DO NOT SCALE DRAWING

	NAME/#	DATE
DRAWN	DMP	10/15/09
ORG. AUTHOR	DMP	
ORG. ECR	21665	
Q.A.		

3RD-ANGLE PROJECTION

THE BILCO COMPANY
P.O. Box 1203 New Haven, Connecticut 06505
(203) 934-6363 Fax (203) 933-8478
www.bilco.com e-mail: bilco@bilco.com

TITLE: S/NB DOOR ASSY

SIZE: B | DWG. NO.: S/NB DOOR ASSY | REV: X4

SCALE: 1:2 | WEIGHT: | SHEET 9 OF 10

MARK A. de STEFANO LICENSE No 61657 STATE OF FLORIDA PROFESSIONAL ENGINEER

DE STEFANO ENGINEERING GROUP, PL
1800 Second Street, Ste. 712 Ph: (941)371-1724
Sarasota Florida 34236 Fax:(941)847-0870
Email: MarkD@DeStefanoEngineering.com
Website: www.DeStefanoEngineering.com
Certificate of Authorization Number 27383

MARK A. DE STEFANO, PE
FL. REGISTRATION # 61657

PRODUCT REVISED
as complying with the Florida Building Code
Acceptance No 11-0722.10
Expiration Date 12/02/2014
By
Miami Dade Product Control

PRODUCT RENEWED
as complying with the Florida Building Code
Acceptance No 14-0708.02
Expiration Date 12/02/2019
By
Miami Dade Product Control

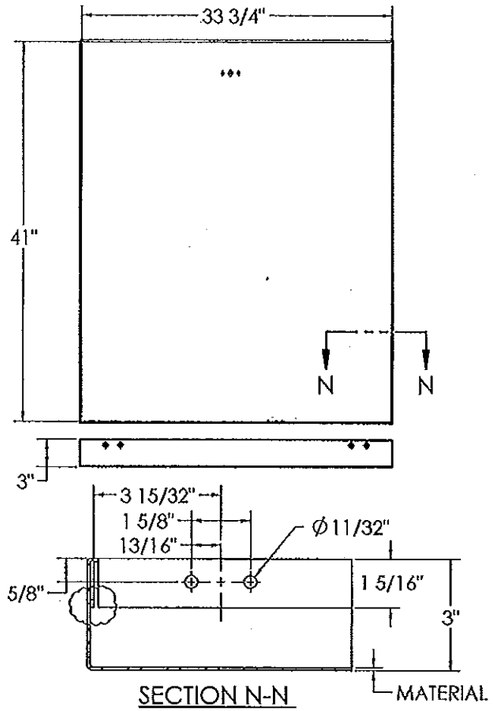

SECTION N-N

UNIT	PART NO.	MATERIAL
S	SD502	14 GA. (.075") GALV STEEL
S	SD502AL	11 GA. (.090") 3003 H14 ALUM

S COVER

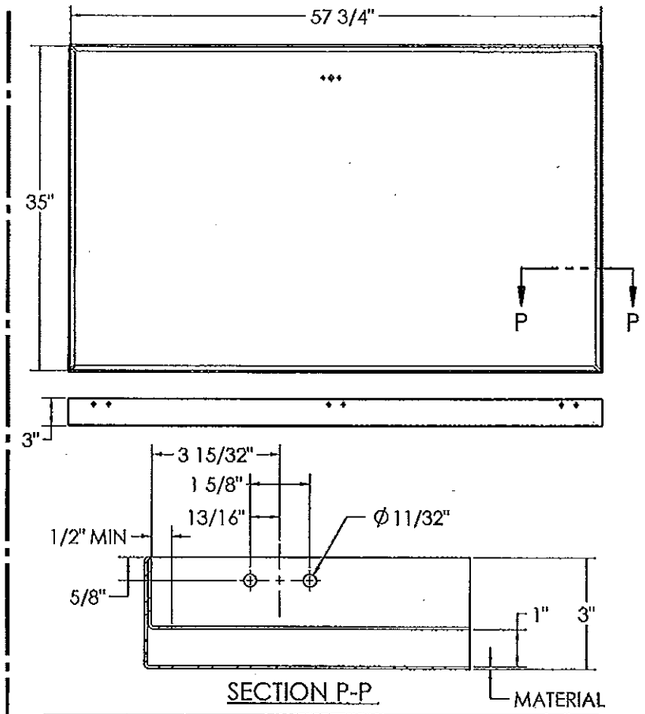

SECTION P-P

UNIT	PART NO.	MATERIAL
NB	SD511E	14 GA. (.075") GALV STEEL
NB	SD583A	11 GA. (.090") 3003 H14 ALUM

NB COVER

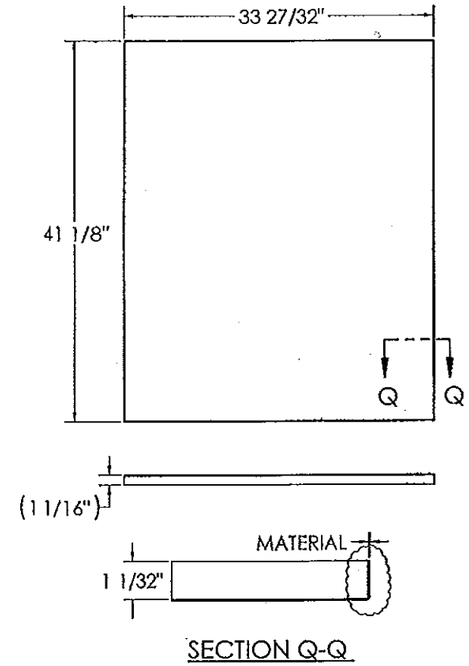

SECTION Q-Q

UNIT	PART NO.	MATERIAL
S	SD521	22 GA. (.032") GALV STEEL
S	SD521AL	18 GA. (.040") 3003 H14 ALUM

S LINER

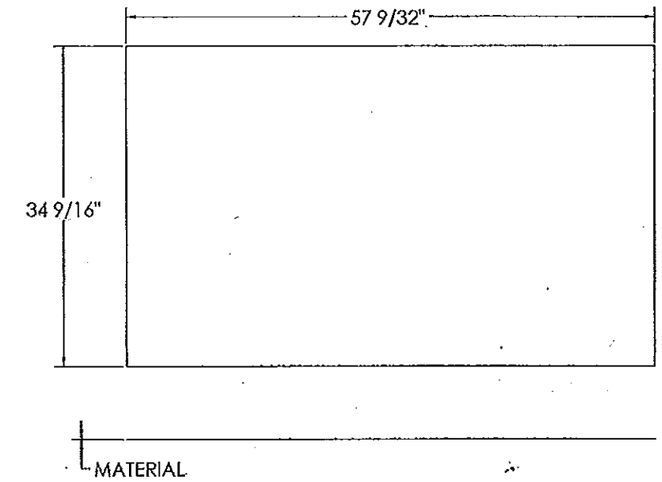

UNIT	PART NO.	MATERIAL
NB	SD512	22 GA. (.032") GALV STEEL
NB	SD584AL	18 GA. (.040") 3003 H14 ALUM

NB LINER

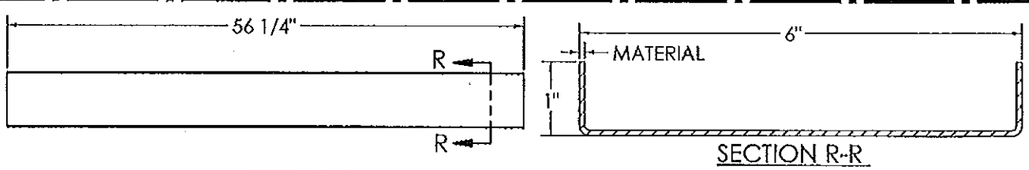

SECTION R-R

UNIT	PART NO.	MATERIAL
NB	SD527NB	14 GA. (.075") GALV STEEL
NB	SD527NB-AL	11 GA. (.090") 3003 H14 ALUM

STIFFENER

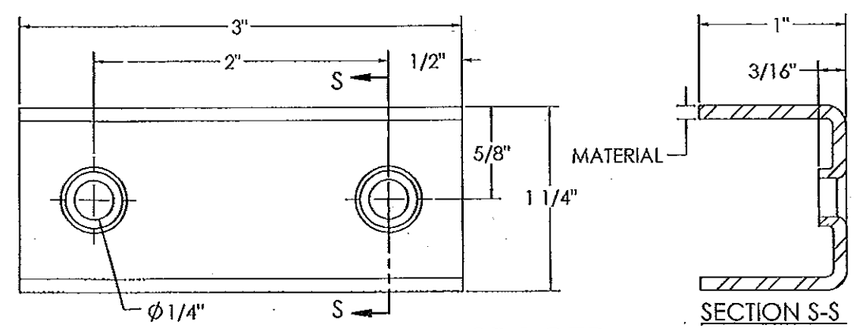

SECTION S-S

UNIT	PART NO.	MATERIAL
S & NB	SD36	13 GA. (.090") GALV STEEL
S & NB	SD36AL	11 GA. (.090") 3003 H14 ALUM

SPACER

REV.	DESCRIPTION	BY	DATE
X4	S COVER DESIGN, HOLD OPEN ARM, SPRING EARS & LOADS, LABELS, LOCK HANDLE	DJC	07/07/11

UNLESS OTHERWISE SPECIFIED:
UNLESS OTHERWISE SPECIFIED REMOVE ALL BURRS & SHARP CORNERS
DIMENSION TOLERANCES
x.xxx +/- .010
x.xx +/- .015
x.x +/- .030
ANGLES +/- 2°
FRACTIONS +/- 1/32
INTERPRET GEOMETRIC TOLERANCING PER:
MATERIAL
FINISH
DO NOT SCALE DRAWING

	NAME/#	DATE
DRAWN	CTD	10/15/09
ORG. AUTHOR	CTD	
ORG. ECR	23431	
Q.A.		

3RD-ANGLE PROJECTION

THE BILCO COMPANY
P.O. Box 1203 New Haven, Connecticut 06505
(203) 934-6363 Fax (203) 933-8478
www.bilco.com e-mail: bilco@bilco.com

TITLE: S/NB DOOR ASSY

SIZE	DWG. NO.	REV
B	S/NB DOOR ASSY	X4

SCALE: 1:8 WEIGHT: SHEET 10 OF 10

MARK A. de STEFANO LICENSE No 61657 STATE OF FLORIDA PROFESSIONAL ENGINEER

DE STEFANO ENGINEERING GROUP, PL
1800 Second Street, Ste. 712 Ph: (941)371-1724
Sarasota Florida 34236 Fax:(941)847-0870
Email: MarkD@DeStefanoEngineering.com
Website: www.DeStefanoEngineering.com
Certificate of Authorization Number 27383
MARK A. DE STEFANO, PE
FL. REGISTRATION # 61657

PRODUCT REVISED
as complying with the Florida Building Code
Acceptance No 11-0722.10
Expiration Date 12/02/2014
By
Miami Dade Product Control

PRODUCT RENEWED
as complying with the Florida Building Code
Acceptance No 14-0708.07
Expiration Date 12/02/2019
By
Miami Dade Product Control