MIAMI-DADE COUNTY
PRODUCT CONTROL SECTION
11805 SW 26 Street, Room 208
Miami, Florida 33175-2474
T (786) 315-2590 F (786) 315-2599
www.miamidade.gov/economy

DEPARTMENT OF REGULATORY AND ECONOMIC RESOURCES (RER)
BOARD AND CODE ADMINISTRATION DIVISION

NOTICE OF ACCEPTANCE (NOA)

Accurex, LLC
P.O. Box 410
Schofield, WI 54476

SCOPE:

This NOA is being issued under the applicable rules and regulations governing the use of construction materials. The documentation submitted has been reviewed and accepted by Miami-Dade County RER-Product Control Section to be used in Miami Dade County and other areas where allowed by the Authority Having Jurisdiction (AHJ).

This NOA shall not be valid after the expiration date stated below. The Miami-Dade County Product Control Section (In Miami Dade County) and/or the AHJ (in areas other than Miami Dade County) reserve the right to have this product or material tested for quality assurance purposes. If this product or material fails to perform in the accepted manner, the manufacturer will incur the expense of such testing and the AHJ may immediately revoke, modify, or suspend the use of such product or material within their jurisdiction. RER reserves the right to revoke this acceptance, if it is determined by Miami-Dade County Product Control Section that this product or material fails to meet the requirements of the applicable building code.

This product is approved as described herein, and has been designed to comply with the Florida Building Code, including the High Velocity Hurricane Zone.

DESCRIPTION: Series "XRUD/SED", "XRUB/SEB", "XRED" and "XREB" Aluminum Rooftop and Sidewall Mounted Exhaust Fans

APPROVAL DOCUMENT: Drawing No. **HSA4001** to **HSA4008**, titled "XRUD/XRUB, XRED/XREB and XSED/XSEB-060-300", Sheets 1 through 8 of 8, dated 02/09/2010 and 03/02/2012, prepared by the manufacturer, signed and sealed by L. David Rice, P.E., bearing the Miami-Dade County Product Control renewal stamp with the Notice of Acceptance number and expiration date by the Miami-Dade County Product Control Section.

MISSILE IMPACT RATING: Large and Small Missile Impact Resistant

LIMITATION: Models G-060 through G-133 and GB-071 through GB-131 are not Large Missile Impact Resistant.

LABELING: Each unit shall bear a permanent label with the manufacturer's name or logo, Schofield, WI or Kings Mountain, NC, model/series, and following statement: "Miami-Dade County Product Control Approved", unless otherwise noted herein.

RENEWAL of this NOA shall be considered after a renewal application has been filed and there has been no change in the applicable building code negatively affecting the performance of this product.

TERMINATION of this NOA will occur after the expiration date or if there has been a revision or change in the materials, use, and/or manufacture of the product or process. Misuse of this NOA as an endorsement of any product, for sales, advertising or any other purposes shall automatically terminate this NOA. Failure to comply with any section of this NOA shall be cause for termination and removal of NOA.

ADVERTISEMENT: The NOA number preceded by the words Miami-Dade County, Florida, and followed by the expiration date may be displayed in advertising literature. If any portion of the NOA is displayed, then it shall be done in its entirety.

INSPECTION: A copy of this entire NOA shall be provided to the user by the manufacturer or its distributors and shall be available for inspection at the job site at the request of the Building Official.

This NOA **renews NOA # 13-0220.09** and consists of this page 1 and evidence pages E-1 and E-2, as well as approval document mentioned above.

The submitted documentation was reviewed by **Carlos M. Utrera, P.E.**

MIAMI-DADE COUNTY APPROVED

10/27/2014

NOTICE OF ACCEPTANCE: EVIDENCE SUBMITTED

A. DRAWINGS ***"Submitted under NOA # 13-0220.09"***

1. Drawing No. **HSA4001** to **HSA4008**, titled "XRUD/XRUB, XRED/XREB and XSED/XSEB-060-300", Sheets 1 through 8 of 8, dated 02/09/2010 and 03/02/2012, prepared by the manufacturer, signed and sealed by L. David Rice, P.E.

B. TESTS ***"Submitted under NOA # 13-0220.08"***

1. Test report on 1) Uniform Static Air Pressure Test per FBC, TAS 202-94
   2) Large Missile Impact Test per FBC, TAS 201-94,
   3) Cyclic Wind Pressure Test per FBC, TAS 203-94,
   along with marked-up drawings and installation diagram of Model Cube-300, CUBE-161/HP and CUE-075 Rooftop Ventilating Fans, prepared by Architectural Testing, Inc., Test Report No. **C0120.01-602-18**, dated 08/07/2012, with revision 2 dated 05/28/2013, signed and sealed by Shawn G. Collins, P.E.
2. Test report on 1) Uniform Static Air Pressure Test per FBC, TAS 202-94
   2) Large Missile Impact Test per FBC, TAS 201-94,
   3) Cyclic Wind Pressure Test per FBC, TAS 203-94,
   along with marked-up drawings and installation diagram of Model GB-300, GB-161/HP and GB-141/HP Rooftop Ventilating Fans, prepared by Architectural Testing, Inc., Test Report No. **C0120.02-602-18**, dated 08/07/2012, with revision 2 dated 05/28/2013, signed and sealed by Shawn G. Collins, P.E.

"Submitted under NOA # 12-0120.13"

3. Test report on Large Missile Impact Test per FBC, TAS 201-94 of Model Cube-300 Side Wall Ventilating Fans, prepared by Architectural Testing, Inc., Test Report No. **B3520.01-602-18**, dated 11/18/2011, signed and sealed by Shawn G. Collins, P.E.

"Submitted under NOA # 09-0624.09"

4. Test report on 1) Uniform Static Air Pressure Test per FBC, TAS 202-94
   2) Large Missile Impact Test per FBC, TAS 201-94,
   3) Cyclic Wind Pressure Test per FBC, TAS 203-94,
   along with marked-up drawings and installation diagram of Model Cube-300 Belt Drive Rooftop Ventilating Fans, prepared by Architectural Testing, Inc., Test Report No. **88029.01-602-18**, dated 02/04/2009, signed and sealed by Joseph A. Reed, P.E.
5. Test report on 1) Uniform Static Air Pressure Test per FBC, TAS 202-94
   2) Large Missile Impact Test per FBC, TAS 201-94,
   3) Cyclic Wind Pressure Test per FBC, TAS 203-94,
   along with marked-up drawings and installation diagram of Model GB-300 Belt Drive Rooftop Ventilating Fans, prepared by Architectural Testing, Inc., Test Report No. **88799.01-602-18**, dated 04/06/2009, signed and sealed by Joseph A. Reed, P.E.

10/27/2014

Carlos M. Utrera, P.E.
Product Control Examiner
NOA No. 14-0731.04
Expiration Date: September 23, 2019
Approval Date: November 6, 2014

NOTICE OF ACCEPTANCE: EVIDENCE SUBMITTED

C. CALCULATIONS

"Submitted under NOA # 13-0220.08"

1. Anchor verification calculations, prepared by Rice Engineering, dated 03/05/2012, signed and sealed by L. David Rice, P.E.

"Submitted under NOA # 12-0120.13"

2. Anchor verification calculations, prepared by Rice Engineering, dated 03/05/2012, signed and sealed by L. David Rice, P.E.

"Submitted under NOA # 09-0624.09"

3. Anchor verification calculations, prepared by Rice Engineering, dated 06/12/2009, signed and sealed by L. David Rice, P.E.

D. QUALITY ASSURANCE

1. Miami-Dade Department of Regulatory and Economic Resources (RER)

E. MATERIAL CERTIFICATIONS

1. None.

F. STATEMENTS

1. Statement letter of code conformance to 2010 FBC issued by Rice Engineering, dated 07/22/2014, signed and sealed by L. David Rice, P.E.

"Submitted under NOA # 13-0220.08"

2. No financial interest letter issued by Rice Engineering, dated 01/17/2013, signed and sealed by L. David Rice, P.E.

"Submitted under NOA # 10-0303.04"

3. Private label agreement dated 03/10/2010.

10/27/2014

Carlos M. Utrera, P.E.
Product Control Examiner
NOA No. 14-0731.04
Expiration Date: September 23, 2019
Approval Date: November 6, 2014

MODEL	FASTENER G		FASTENER H		FASTENER J		FASTENER K	
	QTY.	DESCRIPTION	QTY.	DESCRIPTION	QTY.	DESCRIPTION	QTY.	DESCRIPTION
XRUD/SEO-060-065-070-075 080-085-090-095-	12 EA.	TCS ¼-20 X ¾ DACROMET COATED	4	RIVET, ¼ X 5/16 SEMI TUBULAR 5052 ALUM.	4	SCREW, ¼-20 X ⅝ 18-8/SS	4	PAL NUT, ¼-20 SPRING STEEL
XRUD/SEO-098-099-101-121 131-141-161/HP	16 EA.							
XRUD/SEO-180/HP-200	24 EA.		6					
XRUB/SEB-098-099-101/HP 121-131-141/HP-161/HP/XP	16 EA.		4					
XRUB/SEB-180/HP-200/HP 220/HP-240/HP/XP-300/HP/XP	24 EA.		6					

DESIGN LIMITS	
Max: Design Load:	±150 psf (3.6 Kpa)
Max: Overall Enclosure Dia.	48.31 in. (1227 mm)
Max: Overall Unit Height:	44.50 in. (1130 mm)

REVISION	BY	DATE	SH
CREATED DWG	DFY	12/20/2010	8
ADDED XRUB-099 AND XRUB-099	SPI	06/20/2011	1
ADDED XSEO AND XSEB UNITS	SPI	05/20/2011	8
REMOVED MAX WIND VELOCITY AND UPDATED NOTE NUMBER 7	SPI	06/20/2011	8
UPDATE DESIGN LOAD TO 150	SPI	06/20/2011	8
UPDATE FASTENER G QTY	SPI	05/20/2011	4

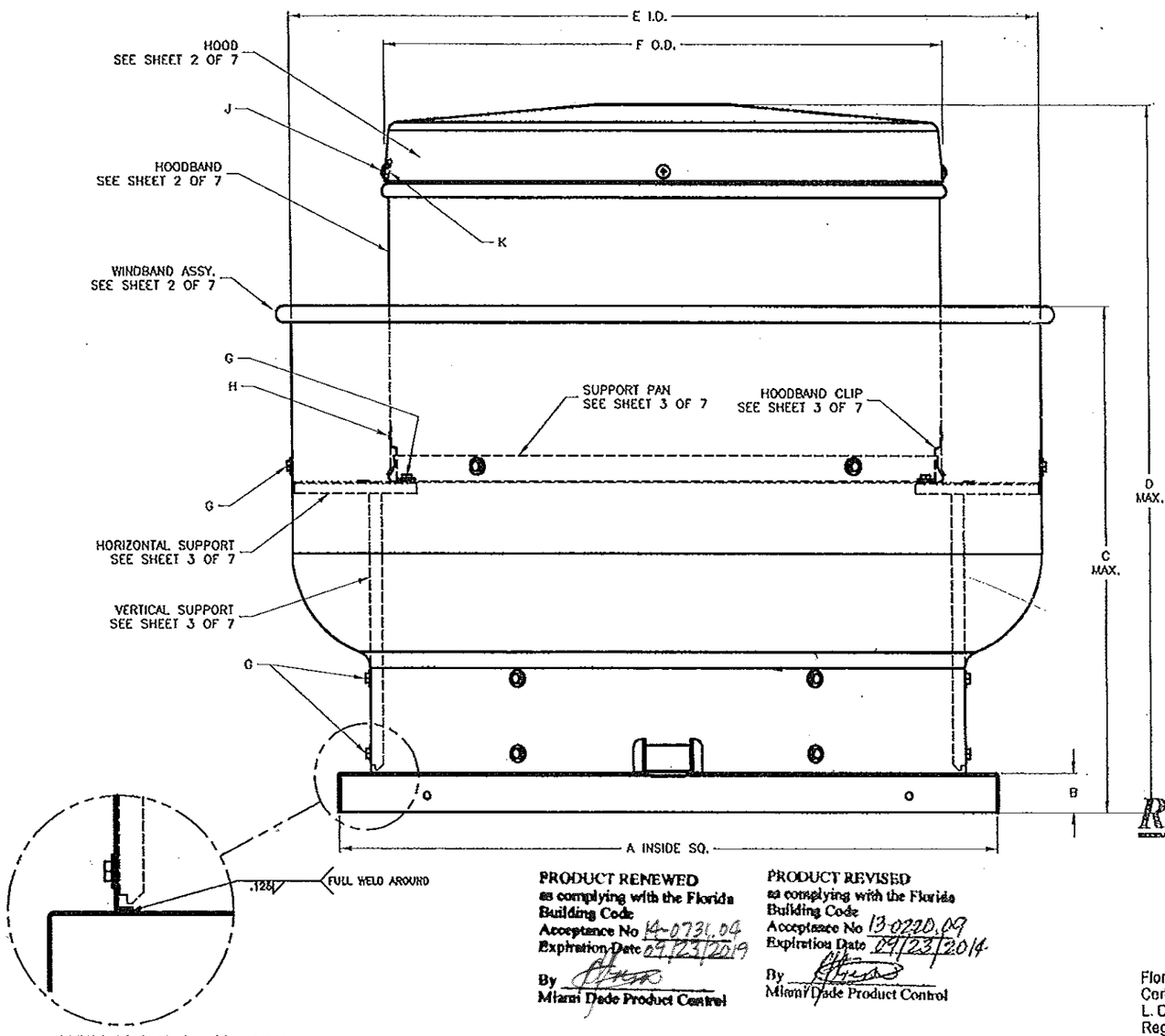

WINDBAND TO CURB CAP CONNECTION
TYP. ALL MODELS

ALL DIMENSIONS ARE IN INCHES

MODEL	A	B	C	D	E	F	WEIGHT LBS.
XRUD/SEO-060	17.00	1.75	13.13	15.41	18.38	12.63	29
XRUD/SEO-065	17.00	1.75	13.13	15.41	18.38	12.63	29
XRUD/SEO-070	17.00	1.75	13.13	15.41	18.38	12.63	29
XRUD/SEO-075	17.00	1.75	13.13	15.41	18.38	12.63	29
XRUD/SEO-080	19.00	1.75	13.13	15.37	21.00	14.38	40
XRUD/SEO-085	19.00	1.75	13.13	15.37	21.00	14.38	40
XRUD/SEO-090	19.00	1.75	13.13	15.37	21.00	14.38	40
XRUD/SEO-095	19.00	1.75	15.19	17.31	21.00	14.38	40
XRUD/SEO-098	19.00	1.75	19.50	27.00	23.63	14.38	53
XRUD/SEO-099	19.00	1.75	19.50	27.00	23.63	14.38	53
XRUD/SEO-101	19.00	1.75	19.50	27.00	23.63	18.63	53
XRUD/SEO-121	19.00	1.75	19.50	27.00	23.63	18.63	64
XRUD/SEO-131	19.00	1.75	19.50	27.00	23.63	18.63	64
XRUD/SEO-141/HP	22.00	1.75	20.35	32.20	27.70	21.00	90
XRUD/SEO-161/HP	22.00	1.75	20.35	32.20	27.70	21.00	90
XRUD/SEO-180/HP	30.00	1.75	22.72	31.57	34.20	25.20	142
XRUD/SEO-200	30.00	1.75	22.72	31.57	34.20	25.20	142
XRUB/SEB-098	19.00	1.75	19.50	27.00	23.63	18.63	58
XRUB/SEB-099	19.00	1.75	19.50	27.00	23.63	18.63	58
XRUB/SEB-101/HP	19.00	1.75	19.50	27.00	23.63	18.63	58
XRUB/SEB-121	19.00	1.75	19.50	27.00	23.63	18.63	66
XRUB/SEB-131	19.00	1.75	19.50	27.00	23.63	18.63	66
XRUB/SEB-141/HP	22.00	1.75	20.35	32.20	27.70	21.00	84
XRUB/SEB-161/HP/XP	22.00	1.75	20.35	32.20	27.70	21.00	87
XRUB/SEB-180/HP	30.00	1.75	22.72	33.75	34.20	25.20	126
XRUB/SEB-200/HP	30.00	1.75	22.72	33.75	34.20	25.20	142
XRUB/SEB-220/HP	34.00	1.75	27.25	40.00	40.90	29.20	174
XRUB/SEB-240/HP/XP	34.00	1.75	27.25	40.00	40.90	29.20	175
XRUB/SEB-300/HP/XP	40.00	1.75	30.84	44.50	48.31	36.02	313

NOTES:

1. MODELS XRUD, XRUB, SEO, SEB AND HAVE BEEN SUCCESSFULLY TESTED IN ACCORDANCE WITH MIAMI DADE TEST PROTOCOL TAS-201 (LARGE MISSILE IMPACT), TAS-203(CYCLIC WIND LOADING.) AND TAS-202 (STATIC LOADING).
2. ROOF STRUCTURE MUST BE DESIGNED TO WITHSTAND THE WEIGHT AND LOADING TRANSMITTED BY ROOF TOP FANS. FASTENERS SHALL BE AS SPECIFIED AND INSTALLED AS DETAILED.
3. DESIGN TESTING AND INSTALLATION CONFORMS TO AISC MANUAL OF STEEL CONSTRUCTION AND ALUMINUM DESIGN MANUAL.
4. FAN CURBS MUST BE ANCHORED TO ROOF FRAMING MEMBERS AND NOT TO THE ROOFING SYSTEM.
5. DESIGN, TESTING, AND INSTALLATION CONFORMS TO FLORIDA BUILDING CODE.
6. THIS APPROVAL IS FOR THE STRUCTURAL PERFORMANCE AND IMPACK RESISTANCE ONLY. INTERIOR MECHANISM AND/OR ELECTRICAL CIRCUITRY ARE OUTSIDE THE SCOPE OF THIS APPROVAL.
7. THIS PRODUCT HAS NOT BEEN TESTED FOR WATER PENETRATION ACCORDING TO FLORIDA BUILDING CODE, TAS 100(A), WIND DRIVEN RAIN TEST. IT CANNOT BE INSTALLED WITHIN THE RIDGE AREA FBC 1523.6.5.2.13

PRODUCT RENEWED
as complying with the Florida Building Code
Acceptance No 14-0731.04
Expiration Date 09/23/2019
By
Miami Dade Product Control

PRODUCT REVISED
as complying with the Florida Building Code
Acceptance No 13-0220.09
Expiration Date 09/23/2014
By
Miami Dade Product Control

RICE ENGINEERING
105 School Creek Trail
Luxemburg, WI 54217
Phone: 920.845.1042
Fax: 920.845.1048
www.rice-inc.com

Florida Firm No: F-01000005061
Certificate of Authorization: #9090
L. David Rice
Registration No: 50923

L. DAVID RICE
LICENSED
No. 50923
STATE OF FLORIDA
PROFESSIONAL ENGINEER

JUN 0.5 2013

ACCUREX

XRUD/XRUB-060-300
SHEET 1 OF 8

12/09/2010

1/3

HSA4001

REVISION	PCR	BY	DATE	REV
CREATED DWG.		DFY	12/29/2009	0
ADDED XRUD-099 AND XRUB-099		SPI	06/12/2011	1
ADDED XSED AND XSEB UNITS		SPI	03/26/2012	2

PRODUCT RENEWED
as complying with the Florida
Building Code
Acceptance No 14-0731.04
Expiration Date 07/23/2019
By
Miami Dade Product Control

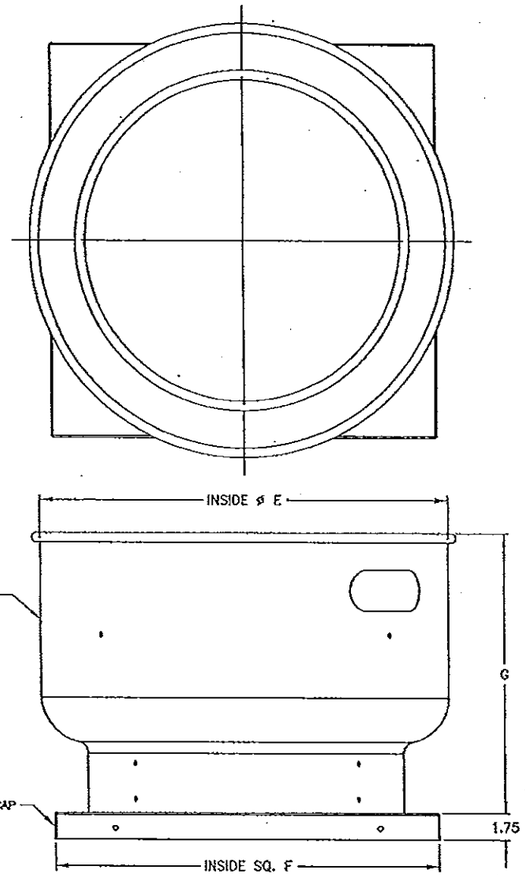

WINDBAND ASSY.
1 REQ'D. PER UNIT

MODEL	E	F	G	WINDBAND	CURB CAP
XURO-060-65-70-75	18.38	17.00	11.38	.051 ALUM. 1100-H12	.051 ALUM. 1100-H14
XRUO-080-85-90	21.00	19.00	11.50	.051 ALUM. 1100-H12	.063 ALUM. 1100-H12
XRUO-095	21.00	19.00	13.44	.051 ALUM. 1100-H12	.063 ALUM. 1100-H12
XRUO-098-099-101-121-131	23.63	19.00	17.75	.051 ALUM. 1100-H12	.063 ALUM. 1100-H12
XRUO-141/HP-161/HP	27.63	22.00	18.56	.051 ALUM. 1100-H12	.063 ALUM. 1100-H12
XRUO-180/HP-200	34.13	30.00	20.97	.063 ALUM. 1100-H22	.063 ALUM. 1100-H14
XRUB-098-099-101/HP-121-131	23.63	19.00	17.75	.051 ALUM. 1100-H12	.063 ALUM. 1100-H12
XRUB-141/HP-161/HP/XP	27.63	22.00	17.75	.051 ALUM. 1100-H12	.063 ALUM. 1100-H12
XRUB-180/HP-200/HP	34.13	30.00	20.97	.063 ALUM. 1100-H22	.063 ALUM. 1100-H14
XRUB-220/HP-240/HP/XP	40.78	34.00	25.50	.063 ALUM. 1100-H22	.063 ALUM. 1100-H12
XRUB-300/HP/XP	48.16	40.00	29.09	.080 ALUM. 1100-H22	.063 ALUM. 1100-H12

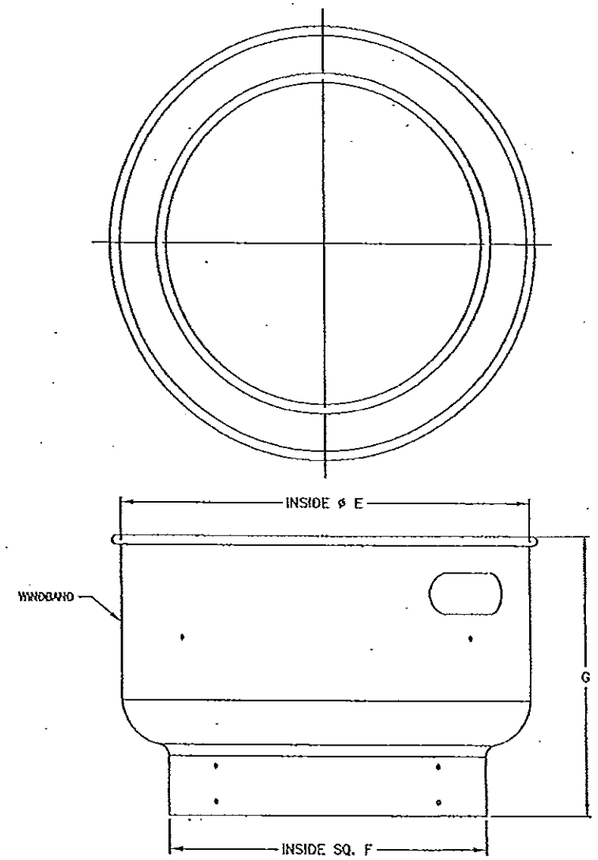

WINDBAND ASSY.
1 REQ'D. PER UNIT

MODEL	E	F	G	WINDBAND
XSED-060-65-70-75	18.38	14.750	11.38	.051 ALUM. 1100-H12
XSED-080-85-90	21.00	17.875	11.50	.051 ALUM. 1100-H12
XSED-095	21.00	17.875	13.44	.051 ALUM. 1100-H12
XSED-098-099-101-121-131	23.63	19.75	17.75	.051 ALUM. 1100-H12
XSED-141/HP-161/HP	27.63	22.125	18.56	.051 ALUM. 1100-H12
XSED-180/HP-200	34.13	27.750	20.97	.063 ALUM. 1100-H22
XSEB-098-099-101/HP-121-131	23.63	19.75	17.75	.051 ALUM. 1100-H12
XSEB-141/HP-161/HP/XP	27.63	22.125	17.75	.051 ALUM. 1100-H12
XSEB-180/HP-200/HP	34.13	27.750	20.97	.063 ALUM. 1100-H22
XSEB-220/HP-240/HP/XP	40.78	31.250	25.50	.063 ALUM. 1100-H22
XSEB-300/HP/XP	48.16	38.375	29.09	.080 ALUM. 1100-H22

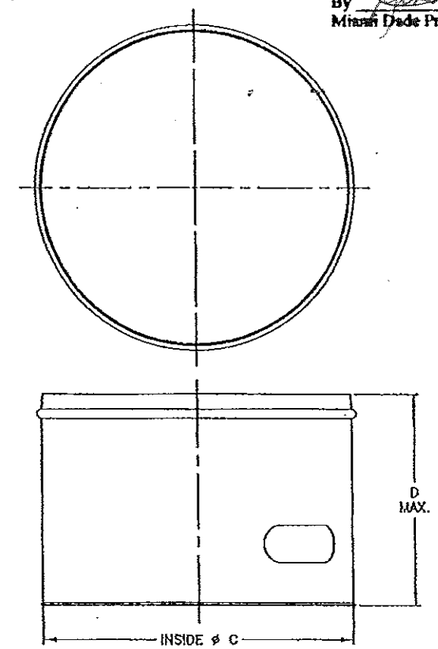

HOODBAND
1 REQ'D. PER UNIT

MODEL	C	D	HOOD
XRUD/XSED-060-65-70-75	12.41	5.47	.040 ALUM. 1100-H14
XRUD/XSED-080-85-90-95	14.29	5.47	.040 ALUM. 1100-H14
XRUD/XSED-098-099-101-121-131	18.43	12.00	.040 ALUM. 1100-H14
XRUD/XSED-141-161/HP	20.94	14.25	.040 ALUM. 1100-H14
XRUD/XSED-180/HP-200	25.13	14.25	.040 ALUM. 1100-H14
XRUB/XSEB-098-099-101/HP-121-131	18.43	12.00	.040 ALUM. 1100-H14
XRUB/XSEB-141/HP-161/HP/XP	20.94	14.25	.040 ALUM. 1100-H14
XRUB/XSEB-180/HP-200/HP	25.13	18.00	.040 ALUM. 1100-H14
XRUB/XSEB-220/HP-240/HP/XP	28.81	18.00	.040 ALUM. 1100-H14
XRUB/XSEB-300/HP/XP	35.94	23.50	.051 ALUM. 1100-H14

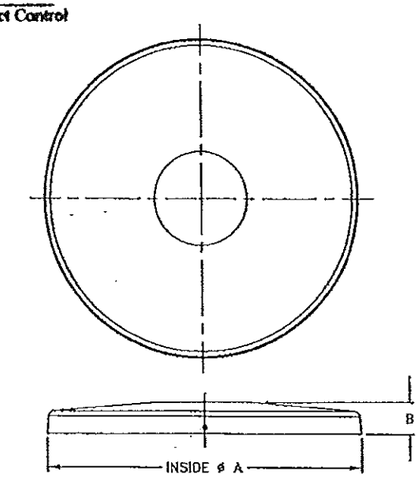

HOOD
1 REQ'D. PER UNIT

MODEL	A	B	HOOD
XRUD/XSED-060-65-70-75	12.50	1.85	.051 ALUM. 1100-H12
XRUD/XSED-080-85-90-95	14.38	1.94	.051 ALUM. 1100-H12
XRUD/XSED-098-099-101-121-131	18.63	2.66	.040 ALUM. 1100-H14
XRUD/XSED-141-161/HP	21.25	2.13	.040 ALUM. 1100-H14
XRUD/XSED-180/HP-200	25.44	3.44	.040 ALUM. 1100-H14
XRUB/XSEB-098-099-101/HP-121-131	18.63	2.66	.040 ALUM. 1100-H14
XRUB/XSEB-141/HP-161/HP/XP	21.25	2.13	.040 ALUM. 1100-H14
XRUB/XSEB-180/HP-200/HP	25.44	3.44	.040 ALUM. 1100-H14
XRUB/XSEB-220/HP-240/HP/XP	29.13	3.09	.051 ALUM. 1100-H14
XRUB/XSEB-300/HP/XP	36.25	3.81	.051 ALUM. 1100-H14

PRODUCT REVISED
as complying with the Florida
Building Code
Acceptance No 13-0220.29
Expiration Date 07/23/2014
By
Miami Dade Product Control

L. DAVID RICE
LICENSE
No. 60923
STATE OF FLORIDA
PROFESSIONAL ENGINEER

JAN 17 2013

RICE
ENGINEERING
105 School Creek Trail
Luxemburg, WI 54217
Phone 920.845 1042
Fax: 920.845 1048
www.rice-inc.com

Florida Firm No: F-01000005051
Certificate of Authorization: #9090
L. David Rice
Registration No: 60923

ALL DIMENSIONS ARE IN INCHES

ACCUREX

DRAWN BY	YAKLOVICH
DATE	12/09/2010
SCALE	1/4.8
DWG NO.	HSA4002

XRUD/XRUB-060-300
SHEET 2 OF 8

REVISION	DCK	BY	DATE	REV
CREATED DWG.		DFY	02/09/2010	0
ADDED XRUD-099 AND XRUB-099		SPI	06/03/2011	1
ADDED XSED AND XSEB UNITS		SPI	03/05/2012	2

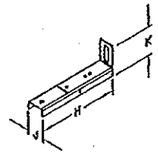

HORIZONTAL SUPPORT

MODEL	H	J	K	QTY.	HORIZONTAL SUPPORT
XRUD/XSED-060--65-70-75	4.68	1.03	2.00	4	16 GA. GALV. G90
XRUD/XSED-080-85-90-95	4.68	1.03	2.00	4	16 GA. GALV. G90
XRUD/XSED-098--099--101-121-131	5.18	1.03	2.00	4	16 GA. GALV. G90
XRUD/XSED-141-161/HP	4.68	1.03	2.00	4	16 GA. GALV. G90
XRUD/XSED-180/HP-200	5.72	1.03	2.00	6	16 GA. GALV. G90
XRUB/XSEB-098--099-101/HP-121--131	5.18	1.03	2.00	4	16 GA. GALV. G90
XRUB/XSEB-141/HP--161/HP/XP	4.68	1.03	2.00	4	16 GA. GALV. G90
XRUB/XSEB-180/HP-200/HP	5.72	1.03	2.00	6	16 GA. GALV. G90
XRUB/XSEB--220/HP--240/HP/XP	7.25	1.03	2.00	6	16 GA. GALV. G90
XRUB/XSEB--300/HP/XP	7.94	1.55	2.50	6	14 GA. GALV. G90

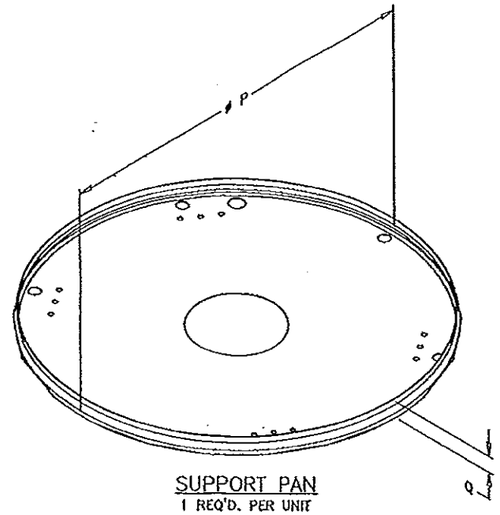

SUPPORT PAN

1 REQ'D. PER UNIT

MODEL	P	Q	SUPPORT PAN
XRUD/XSED-060-65-70-75	12.31	1.75	18 GA. GALV G90
XRUD/XSED-080--85--90--95	14.19	1.94	18 GA. GALV G90
XRUD/XSED-098--099	18.38	3.94	18 GA. GALV G90
XRUD/XSED-101	18.38	3.19	18 GA. GALV G90
XRUD/XSED--121	18.38	4.94	18 GA. GALV G90
XRUD/XSED--131	18.38	4.44	18 GA. GALV G90
XRUD/XSED-141--161/HP	20.88	2.41	20 GA. GALV G90
XRUD/XSED-180/HP--200	25.06	3.48	20 GA. GALV G90
XRUB/XSEB--098--099101/HP--121-131	18.38	2.75	18 GA. GALV G90
XRUB/XSEB-141/HP-161/HP/XP	20.88	1.50	20 GA. GALV G90
XRUB/XSEB-180/HP--200/HP	25.06	1.19	20 GA. GALV G90
XRUB/XSEB-220/HP--240/HP/XP	28.75	1.19	18 GA. GALV G90
XRUB/XSEB-300/HP/XP	35.88	1.19	16 GA. GALV G90

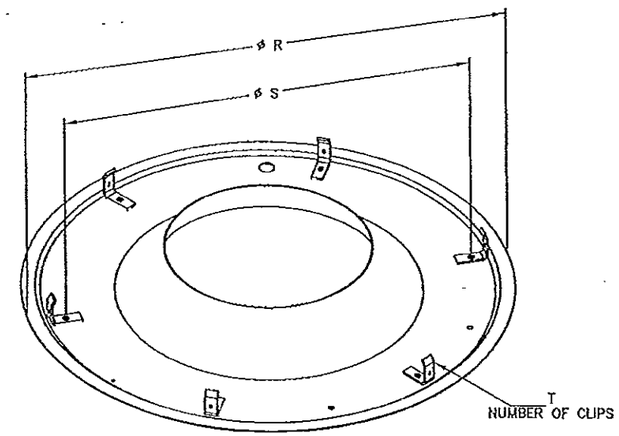

MOUNTING PLATE

1 REQ'D. PER UNIT

MODEL	R	S	T	SUPPORT PAN
XSED-060-65-70-75	14.750	11.750	4	18 GA. GALV G90
XSED-080-85--90-95	17.875	15.000	4	18 GA. GALV G90
XSED/XSEB--098--099--101--121--131	19.750	16.875	4	18 GA. GALV G90
XSED/XSEB-141/HP-161/HP	22.125	19.375	4	18 GA. GALV G90
XSED/XSEB-180/HP-200	27.750	25.000	6	18 GA. GALV G90
XSEB--220/HP-240/HP	31.250	28.375	6	18 GA. GALV G90
XSEB-300/HP	38.375	35.844	6	18 GA. GALV G90

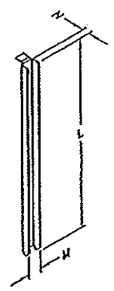

VERTICAL SUPPORT

MODEL	L	M	N	QTY.	VIRTICAL SUPPORT
XRUD--060-65-70-75-080-085-090	8.69	0.93	0.56	4	16 GA. GALV. G90
XRUD--095	8.63	0.93	0.56	4	16 GA. GALV. G90
XRUD-098-099-101-121-131	9.47	0.93	0.56	4	16 GA. GALV. G90
XRUD--141-161	10.88	0.93	0.56	4	16 GA. GALV. G90
XRUD--161HP	7.44	0.93	0.56	4	16 GA. GALV. G90
XRUD--180-200	12.78	0.93	0.56	6	16 GA. GALV. G90
XRUD--180HP	10.88	0.93	0.56	6	16 GA. GALV. G90
XRUB-098-099-101/HP-121-131	9.47	0.93	0.56	4	16 GA. GALV. G90
XRUB--141/HP--161/HP	10.88	0.93	0.56	4	16 GA. GALV. G90
XRUB--161XP	8.63	0.93	0.56	4	16 GA. GALV. G90
XRUB-180/HP-200/HP	12.78	0.93	0.56	6	16 GA. GALV. G90
XRUB--220/HP--240/HP	17.60	0.93	0.56	6	16 GA. GALV. G90
XRUB--240XP	12.78	0.93	0.56	6	16 GA. GALV. G90
XRUB--300/HP	18.09	1.39	0.69	6	14 GA. GALV. G90
XRUB--300XP	13.13	1.39	0.69	6	14 GA. GALV. G90

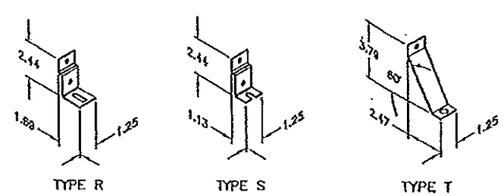

HOODBAND CLIPS

MODEL	TYPE	QTY.	HOODBAND CLIP
XRUD/XSED-060-65-70-75	R	3	16 GA. GALV G90
XRUD/XSED--080--85--90--95	R	3	16 GA. GALV G90
XRUD/XSED-098--099--101--121--131	T	3	16 GA. GALV G90
XRUD/XSED-141/HP-161/HP	R	4	16 GA. GALV G90
XRUD/XSED-180/HP-200	S	6	16 GA. GALV G90
XURB/XSEB-098--099--101/HP--121-131	T	3	16 GA. GALV G90
XRUB/XSEB-141/HP-161/HP/XP	R	4	16 GA. GALV G90
XRUB/XSEB-180/HP-200/HP	S	6	16 GA. GALV G90
XRUB/XSEB--220/HP-240/HP/XP	R	6	16 GA. GALV G90
XRUB/XSEB-300/HP/XP	R	6	16 GA. GALV G90

PRODUCT RENEWED
as complying with the Florida Building Code
Acceptance No 14-0731.04
Expiration Date 07/23/2019
By _____
Miami Dade Product Control

PRODUCT REVISED
as complying with the Florida Building Code
Acceptance No 13-0220.09
Expiration Date 07/23/2014
By _____
Miami/Dade Product Control

JAN 17 2013

RICE ENGINEERING
105 School Creek Trail
Luxemburg, WI 54217
Phone 920.845 1042
Fax: 920.845 1048
www.rice-inc.com

Florida Firm No: F-01000005061
Certificate of Authorization: #9090
L. David Rice
Registration No: 50923

L. DAVID RICE LICENSE No. 50923 STATE OF FLORIDA PROFESSIONAL ENGINEER

ALL DIMENSIONS ARE IN INCHES

ACCUREX

DFY 02/09/2010

XRUD/XRUB-060-300
SHEET 3 OF 8

1/4

HSA4003

MODEL	FASTENER J QTY.	FASTENER J DESCRIPTION	FASTENER K QTY.	FASTENER K DESCRIPTION	FASTENER L QTY.	FASTENER L DESCRIPTION	FASTENER M QTY.	FASTENER M DESCRIPTION	FASTENER N QTY.	FASTENER N DESCRIPTION	FASTENER P QTY.	FASTENER P DESCRIPTION	FASTENER Q QTY.	FASTENER Q DESCRIPTION
XRED-060-065-070-075-080-085-090-095-097-098-099	4	RIVET, 7/32 X 3/8 AL FH SLD	8	RIVET, 3/16 X 3/8 AL FH SLD	—	TCS 1/4-20 X 3/4 DACROMET COATED	4	TCS 1/4-20 X 1 DACROMET COATED	4	SCREW, 1/4-20 X 3/8 PTH 18-8 SS	—	SMS, #10 X 1/2 PTH 18-8 SS	4	SCREW, # 12X1 SELF DRILLING
XRED-101/HP-103/HP-121-123											4			
XRED-131-133-141/HP-143/HP	6		12		9		6		6		—		12	
XRED-150-160-163/HP-170														
XRED-180-183/HP-203														
XREB-071-081-091-101/HP	4		8		6		4		4		4		8	
XREB-121-131														
XREB-141/HP-161/HP	6		12		9		6		6				6	
XREB-180/HP-200/HP														
XREB-220/HP-240/HP			12	TCS 1/4-20 X 3/4 DACROMET COATED									12	
XREB-260-300/HP		TCS 1/4-20 X 3/4 DACROMET COATED												

REVISION	BY	DATE	NO.
CREATED DWG.	RFY	[illegible]	0
ADDED XRED-097 [illegible]	SPI	[illegible]	1
REMOVED MAX WIND VELOCITY AND UPDATED NOTE NUMBER 7	SPI	[illegible]	2
UPDATE DESIGN LOAD TO 150	SPI	[illegible]	3

DESIGN LIMITS	
Max: Design Load:	±150 psf (3.6 Kpa)
Max: Overall Enclosure Dia.	48.31 in. (1227 mm)
Max: Overall Unit Height:	44.50 in. (1130 mm)

ALL DIMENSIONS ARE IN INCHES

MODEL	A	B	C	D	E	F	G	H	WEIGHT LBS.	IMPACT RATED.
XRED-060	17.00	1.75	4.69	8.44	13.88	18.50	11.63	12.38	18	NO
XRED-065	17.00	1.75	4.69	8.44	13.88	18.50	11.63	12.38	18	
XRED-070	17.00	1.75	4.69	8.44	13.88	18.50	11.63	12.38	18	
XRED-075	17.00	1.75	4.69	8.44	13.88	18.50	11.63	12.38	18	
XRED-080	17.00	1.75	5.63	10.38	16.31	21.00	14.50	14.25	26	
XRED-085	17.00	1.75	5.63	10.38	16.31	21.00	14.50	14.25	26	
XRED-090	17.00	1.75	5.63	10.38	16.31	21.00	14.50	14.25	26	
XRED-095	17.00	1.75	5.63	10.38	16.31	21.00	14.50	14.25	26	
XRED-101	19.00	1.75	6.52	10.38	20.13	23.72	19.68	18.19	43	
XRED-121	19.00	1.75	7.25	10.38	20.13	23.72	19.68	18.19	43	
XRED-131	22.00	1.75	6.71	10.38	20.13	27.63	22.19	21.08	59	
XRED-141	22.00	1.75	6.71	12.38	28.07	27.63	22.19	21.08	59	YES
XRED-150	26.00	1.75	5.38	12.38	22.43	34.25	26.23	24.00	59	
XRED-160	30.00	1.75	6.63	13.63	23.68	34.25	26.23	27.00	59	
XRED-170	30.00	1.75	6.63	13.63	23.68	34.25	26.23	27.00	81	
XRED-180	30.00	1.75	7.63	14.63	31.90	34.25	26.34	27.23	81	
XREB-071 : XRED-097	17.00	1.75	6.01	11.56	29.66	23.63	19.75	18.19	58	NO
XREB-081 : XRED-098	17.00	1.75	6.01	11.56	29.66	23.63	19.75	18.19	58	
XREB-091 : XRED-099	17.00	1.75	6.01	11.56	29.66	23.63	19.75	18.19	58	
XREB-101/HP : XRED-103/HP	19.00	1.75	6.01	11.56	29.66	23.63	19.75	18.19	63	
XREB-121 : XRED-123	19.00	1.75	6.01	11.56	29.66	23.63	19.75	18.19	66	
XREB-131 : XRED-133	19.00	1.75	6.01	11.63	29.66	27.63	19.75	18.19	67	
XREB-141/HP : XRED-143/HP	22.00	1.75	6.00	11.56	27.31	27.63	22.19	21.00	83	YES
XREB-161/HP : XRED-163/HP	22.00	1.75	6.00	11.56	27.31	27.63	22.19	21.00	89	
XREB-180/HP : XRED-183/HP	30.00	1.75	7.75	14.75	36.94	34.37	26.40	27.30	125	
XREB-200/HP : XRED-203	30.00	1.75	7.75	14.75	36.94	34.37	26.40	27.30	138	
XREB-220/HP	34.00	1.75	9.62	18.06	40.56	40.75	30.00	30.50	158	
XREB-240/HP	34.00	1.75	9.62	18.06	40.56	40.75	30.00	30.50	158	
XREB-260	40.00	1.75	11.64	19.77	45.16	46.20	35.94	36.00	305	
XREB-300/HP	40.00	1.75	11.64	19.77	45.16	46.20	35.94	36.00	320	

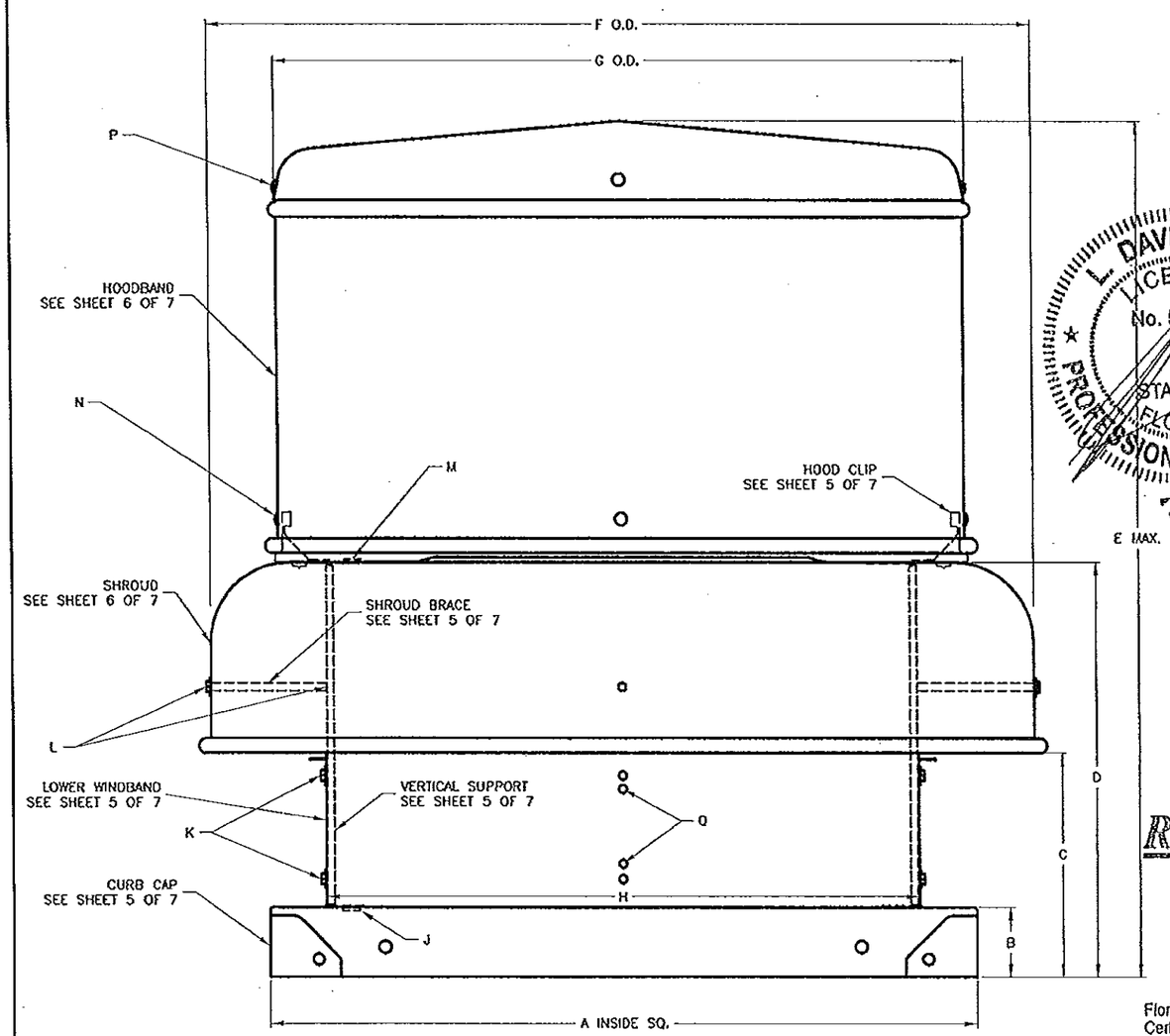

L. DAVID RICE LICENSED No. 50923 STATE OF FLORIDA PROFESSIONAL ENGINEER

JUN 0 5 2013

NOTES:

1. MODELS XRED AND XREB HAVE BEEN SUCCESSFULLY TESTED IN ACCORDANCE WITH MIAMI DADE TEST PROTOCOL TAS-202 (STATIC LOADING), TAS 201 (MISSLE IMPACT) AND TAS-203 (CYCLIC WIND) FANS ARE IMPACT RESISTANT (LIMITED SIZES, SEE CHART ABOVE).
2. ROOF STRUCTURE MUST BE DESIGNED TO WITHSTAND THE WEIGHT AND LOADING TRANSMITTED BY ROOF TOP FANS. FASTENERS SHALL BE AS SPECIFIED AND INSTALLED AS DETAILED.
3. DESIGN TESTING AND INSTALLATION CONFORMS TO AISC MANUAL OF STEEL CONSTRUCTION AND ALUMINUM DESIGN MANUAL.
4. FAN CURBS MUST BE ANCHORED TO ROOF FRAMING MEMBERS AND NOT TO THE ROOFING SYSTEM.
5. DESIGN, TESTING, AND INSTALLATION CONFORMS TO FLORIDA BUILDING CODE.
6. THIS APPROVAL IS FOR THE STRUCTURAL PERFORMANCE AND IMPACK RESISTANCE ONLY. INTERIOR MECHANISM AND/OR ELECTRICAL CIRCUITRY ARE OUTSIDE THE SCOPE OF THIS APPROVAL.
7. THIS PRODUCT HAS NOT BEEN TESTED FOR WATER PENETRATION ACCORDING TO FLORIDA BUILDING CODE, TAS 100(A), WIND DRIVEN RAIN TEST. IT CANNOT BE INSTALLED WITHIN THE RIDGE AREA FBC 1523.6.5.2.13

RICE ENGINEERING
105 School Creek Trail
Luxemburg, WI 54217
Phone: 920.845.1042
Fax: 920.845.1048
www.rice-inc.com

Florida Firm No: F-01000005061
Certificate of Authorization: #9090
L. David Rice
Registration No: 50923

PRODUCT REVISED
as complying with the Florida Building Code
Acceptance No 13-0220.09
Expiration Date 09/23/2019
By _____
Miami Dade Product Control

PRODUCT RENEWED
as complying with the Florida Building Code
Acceptance No 14-0736.04
Expiration Date 09/23/2019
By _____
Miami Dade Product Control

ACCUREX

XRED/XREB-060-300
SHEET 4 OF 8

DATE 12/09/2010
SCALE 1/4
HSA4004

REVISION	BY	DATE	REV
CREATED DWG.	DFY	12/15/2011	0
ADDED XRED-097-098-099-103/HP-123-133 143/HP-163/HP-183/HP-203	SPJ	06/12/2013	1

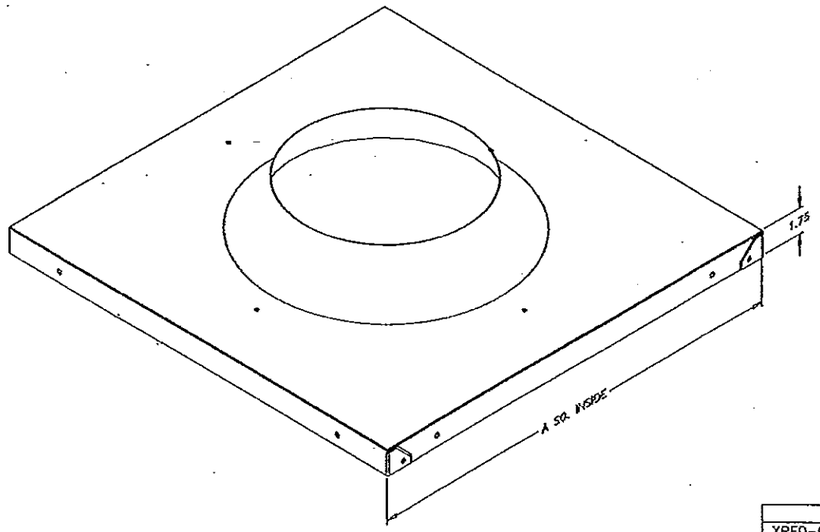

CURB CAP

1 REQ'D. PER UNIT

MODEL	A	CURB CAP
XRED-060-065-070-075-080-085-090-095	17.00	.051 ALUM. 1100-H14
XRED-101-121	19.00	.063 ALUM. 1100-H12
XRED-131-141	22.00	.063 ALUM. 1100-H12
XRED-150	26.00	.063 ALUM. 1100-H12
XRED-160-170-180	30.00	.063 ALUM. 1100-H14
XREB-071-081-091 ; XRED-097-098-099	17.00	.063 ALUM. 1100-H12
XREB-101/HP-121-131 ; XRED-103/HP-123-133	19.00	.063 ALUM. 1100-H12
XREB-141/HP-161/HP ; XRED-143/HP-163/HP	22.00	.063 ALUM. 1100-H12
XREB-180/HP-200/HP ; XRED-183/HP-203	30.00	.063 ALUM. 1100-H14
XREB-220/HP-240/HP	34.00	.063 ALUM. 1100-H12
XREB-260-300/HP	40.00	.063 ALUM. 1100-H12

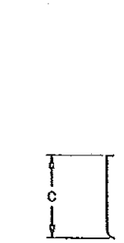

LOWER WINDBAND PROFILE

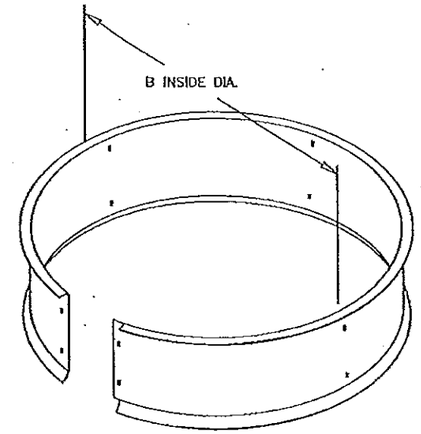

LOWER WINDBAND

ALUM. – 2 REQ'D. PER UNIT
GALV. – 1 REQ'D. PER UNIT

MODEL	B	C	LOWER WINDBAND
XRED-060-065-070-075	12.38	3.31	.040 ALUM. 3105-H14 OR 18 GA. GALV. G90 OR EQUIVALENT
XRED-080-085-090-095	14.25	4.00	
XRED-101-121	18.19	5.06	
XRED-131-141	21.08	5.06	
XRED-150	24.00	4.00	
XRED-160-170	27.00	5.06	
XRED-180	27.30	5.875	
XREB-071-081-091-101/HP-121-131 XRED-097-098-099-103/HP-123-133	18.34	4.00	
XREB-141/HP ; XRED-143/HP	21.41	4.00	
XREB-161/HP ; XRED-163/HP	21.41	5.88	
XREB-180/HP-200/HP ; XRED-183/HP-203	27.30	5.88	
XREB-220/HP-240/HP	30.50	7.88	
XREB-260-300/HP	36.00	9.38	

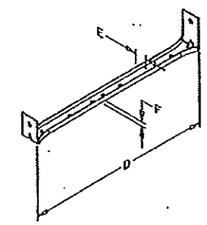

VERTICAL SUPPORT

MODEL	D	E	F	QTY.	VERTICAL SUPPORT
XRED-060-065-070-075	6.69	0.75	0.30	4	18 GA. GALV. G90
XRED-080-085-090-095	8.63	0.75	0.30	4	18 GA. GALV. G90
XRED-101-121	10.63	0.87	0.43	4	16 GA. GALV. G90
XRED-131-141-150	10.63	0.87	0.43	6	16 GA. GALV. G90
XRED-160-170	11.88	0.87	0.43	6	16 GA. GALV. G90
XRED-180	12.88	0.87	0.43	6	16 GA. GALV. G90
XREB-071-081-091-101/HP-121-131 XRED-097-098-099-103/HP-123/133	9.81	0.87	0.43	4	14 GA. GALV. G90
XREB-141/HP ; XRED-143/HP	9.81	0.87	0.43	6	14 GA. GALV. G90
XREB-161/HPM ; XRED-163/HP	11.75	0.87	0.43	6	14 GA. GALV. G90
XREB-180/HP-200/HP ; XRED-183/HP-203	12.81	0.87	0.43	6	14 GA. GALV. G90
XREB-220/HP-240/HP	16.31	0.87	0.43	6	14 GA. GALV. G90
XREB-260-300/HP	18.19	1.37	0.79	6	12 GA. GALV. G90

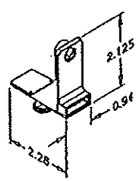

HOOD CLIP

MODEL	QTY.	HOOD CLIP
XRED-060-065-070-075	4	NYLON N1000 STL
XRED-080-085-090-095	4	NYLON N1000 STL
XRED-101-121	4	NYLON N1000 STL
XRED-131-141	4	NYLON N1000 STL
XRED-150-160-170	6	NYLON N1000 STL
XRED-180	6	NYLON N1000 STL
XREB-071-081-091-101/HP-121-131 XRED-097-098-099-103/HP-123-133	4	NYLON N1000 STL
XREB-141/HP-161/HP ; XRED-143/HP-163/HP	4	NYLON N1000 STL
XREB-180/HP-200/HP ; XRED-183/HP-203	6	NYLON N1000 STL
XREB-220/HP-240/HP	6	NYLON N1000 STL
XREB-260-300/HP	6	NYLON N1000 STL

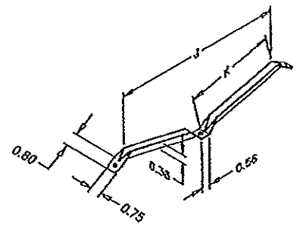

SHROUD BRACE

MODEL	J	K	QTY.	SHROUD BRACE
XRED-060-065-070-075	—	—	0	
XRED-080-085-090-095	—	—	0	
XRED-101-121	—	—	0	
XRED-131-141	13.12	6.43	3	18 GA. GALV. G90
XRED-150	16.44	8.47	3	18 GA. GALV. G90
XRED-160-170-180	16.44	8.07	3	18 GA. GALV. G90
XREB-071	—	—	0	
XREB-081-091-101-101/HP-121	11.12	5.39	2	18 GA. GALV. G90
XREB-131	13.12	6.89	2	18 GA. GALV. G90
XREB-141/HP-161HP	13.12	6.43	3	18 GA. GALV. G90
XREB-180/HP-200/HP ; XRED-183/HP-203	16.43	8.07	3	18 GA. GALV. G90
XREB-220/HP-240/HP	9.79	6.39	3	18 GA. GALV. G90
XRED-260-300/HP	11.18	6.83	3	18 GA. GALV. G90

PRODUCT RENEWED
as complying with the Florida
Building Code
Acceptance No 14-0731.04
Expiration Date 09/23/2019
By
Miami Dade Product Control

PRODUCT REVISED
as complying with the Florida
Building Code
Acceptance No 13-0229.09
Expiration Date 09/23/2014
By
Miami/Dade Product Control

L. DAVID RICE
LICENSE
No. 50923
STATE OF FLORIDA
PROFESSIONAL ENGINEER

RECEIVED 17 2013

RICE ENGINEERING
105 School Creek Trail
Luxemburg, WI 54217
Phone 920.845.1042
Fax: 920.845.1048
www.rice-inc.com

Florida Firm No: F-01000005061
Certificate of Authorization: #9090
L. David Rice
Registration No: 50923

ALL DIMENSIONS ARE IN INCHES

ACCUREX

XRED/XREB-060-300
SHEET 5 OF 8

02/09/2010

1/4

HSA4005

REVISION	BY	DATE	
CREATED DWG.	DFY	06/28/2010	0
ADDED XRED-097-098-099-101-103/HP-121-123-133 XRE-150/HP-160/HP-180/HP-183/HP-203	DFY	09/28/2010	1

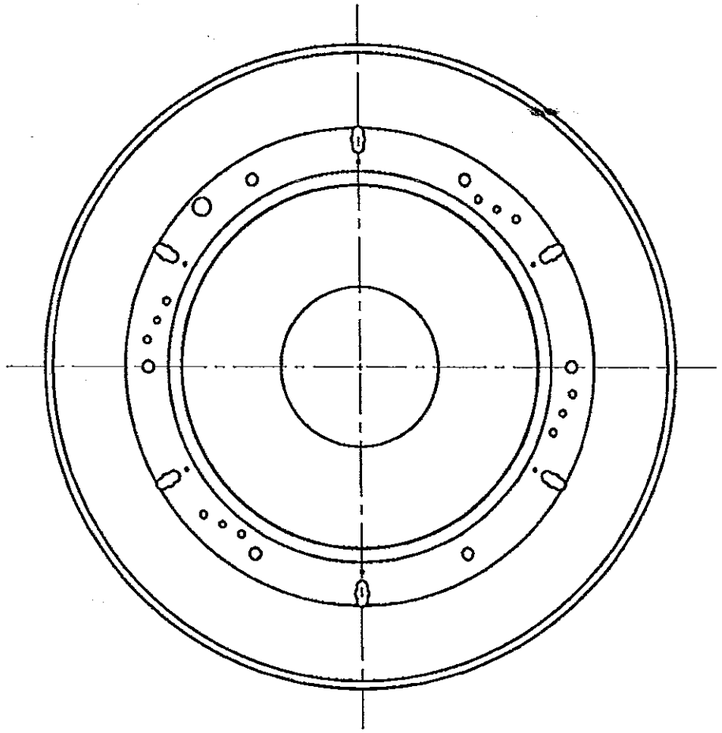

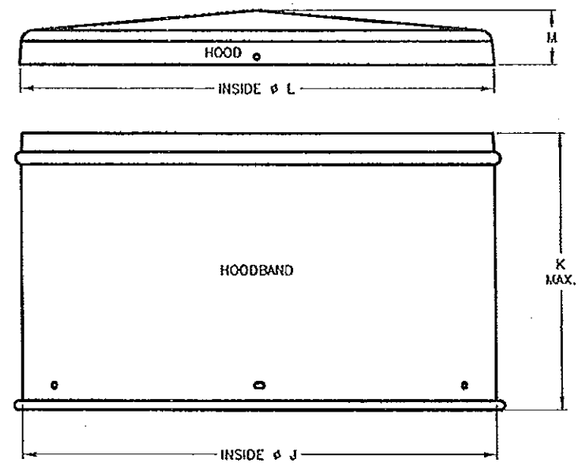

HOODBAND/HOOD
1 EA. REQ'D. PER UNIT

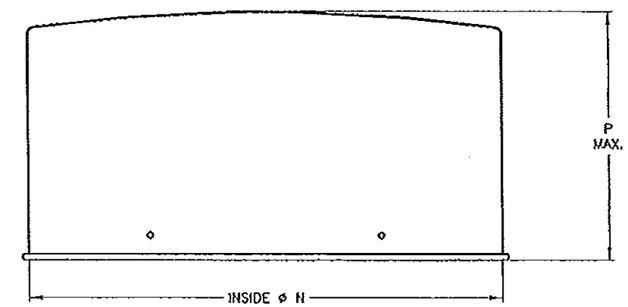

COVER
1 REQ'D. PER UNIT

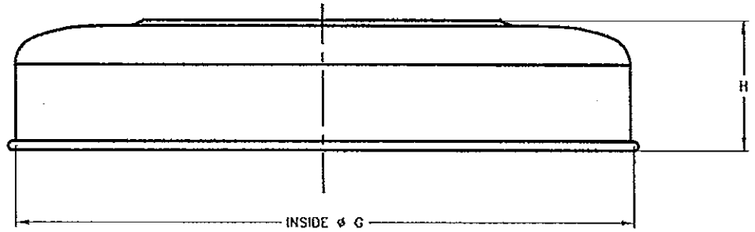

SHROUD
1 REQ'D. PER UNIT

MODEL	HOODBAND/HOOD						COVER		
	J	K	L	M	HOODBAND	HOOD	N	P	COVER
XRED-060-065-070-075	——	——	——	——	——	——	11.63	5.13	.040 ALUM. 1100-H14
XRED-080-085-090-095	——	——	——	——	——	——	14.50	5.63	.040 ALUM. 1100-H14
XRED-097-098-099-101-103/HP-121-123-133	19.61	13.06	19.75	2.09	.040 ALUM. 1100-H14	.040 ALUM. 1100-H14	19.61	11.25	.040 ALUM. 3003-H0
XRED-131-141-143/HP-163/HP	22.15	13.48	22.25	2.75	.040 ALUM. 1100-H14	.040 ALUM. 1100-H14	22.15	7.75	.040 ALUM. 3003-H0
XRED-150-160-170	——	——	——	——	——	——	26.30	13.63	.040 ALUM. 3003-H0
XRED-180-183/HP-203	26.36	14.94	26.44	2.94	.040 ALUM. 1100-H14	.040 ALUM. 1100-H14	26.36	13.63	.040 ALUM. 3003-H0
XREB-071-081-091-101/HP-121-131	19.65	16.81	19.75	2.09	.040 ALUM. 1100-H14	.040 ALUM. 1100-H14	19.61	11.25	.040 ALUM. 3003-H0
XREB-141/HP-161/HP	22.15	13.48	22.25	2.75	.040 ALUM. 1100-H14	.040 ALUM. 1100-H14	22.15	11.75	.040 ALUM. 3003-H0
XREB-180/HP-200/HP	26.34	20.00	26.44	2.94	.040 ALUM. 1100-H14	.040 ALUM. 1100-H14	26.34	13.63	.040 ALUM. 3003-H0
XREB-220/HP-240/HP	29.88	19.75	30.14	3.50	.040 ALUM. 1100-H14	.063 ALUM. 1100-H12	29.88	12.5	.040 ALUM. 3003-H0
XREB-260-300/HP	35.94	23.25	36.25	3.81	.050 ALUM. 1100-H14	.050 ALUM. 1100-H14	——	——	——

NOTE: SIZES SHOWN WITH BOTH HOODBAND/HOOD AND COVER WILL HAVE ONE OR THE OTHER DEPENDING ON SIZE OF MOTOR ORDERED

MODEL	G	H	SHROUD
XRED-060-065-070-075	18.50	3.75	.051 ALUM. 1100-H14
XRED-080-085-090-095	21.00	4.75	.051 ALUM. 1100-H14
XRED-101-121	23.63	5.50	.051 ALUM. 1100-H14
XRED-131-141	27.63	5.94	.051 ALUM. 1100-H14
XRED-150-160-170-180	34.25	7.25	.063 ALUM. 1100-H14
XREB-071-081-091-101/HP-121 XRED-097-098-099-103/HP-123	23.63	5.56	.051 ALUM. 1100-H14
XREB-131 : XRED-133	27.63	6.06	.051 ALUM. 1100-H14
XREB-141/HP-161/HP : XRED-143/HP-163/HP	27.63	5.88	.051 ALUM. 1100-H14
XREB-180/HP-200/HP : XRED-183/HP-203	34.25	7.25	.063 ALUM. 1100-H14
XREB-220/HP-240/HP	40.75	8.75	.063 ALUM. 1100-H14
XREB-260-300/HP	46.00	8.75	.063 ALUM. 1100-H14

PRODUCT RENEWED
as complying with the Florida Building Code
Acceptance No 14-0731.04
Expiration Date 04/27/2019
By
Miami Dade Product Control

PRODUCT REVISED
as complying with the Florida Building Code
Acceptance No 13-0220.09
Expiration Date 04/25/2014
By
Miami Dade Product Control

RICE ENGINEERING
105 School Creek Trail
Luxemburg, WI 54217
Phone: 920.845.1042
Fax: 920.845.1048
www.rice-inc.com

Florida Firm No: F-01000005061
Certificate of Authorization: #9090
L. David Rice
Registration No: 50923

L. DAVID RICE LICENSE No. 50923 STATE OF FLORIDA PROFESSIONAL ENGINEER

JUN 0 5 2013

ALL DIMENSIONS ARE IN INCHES

ACCUREX

XRED/XREB-060-300
SHEET 6 OF 8

1/4

HSA4006

REVISION	BY	IT	DATE	REV
CREATED DWG.		DFY	02/09/2010	0
ADDED XRUB/B-099 & XRED/D-097-098-099 183/HP-123-133-143/HP-163/HP-183/HP-203		SPI	06/01/2011	1
ADD FASTENER TOTALS		SPI	06/16/2013	2

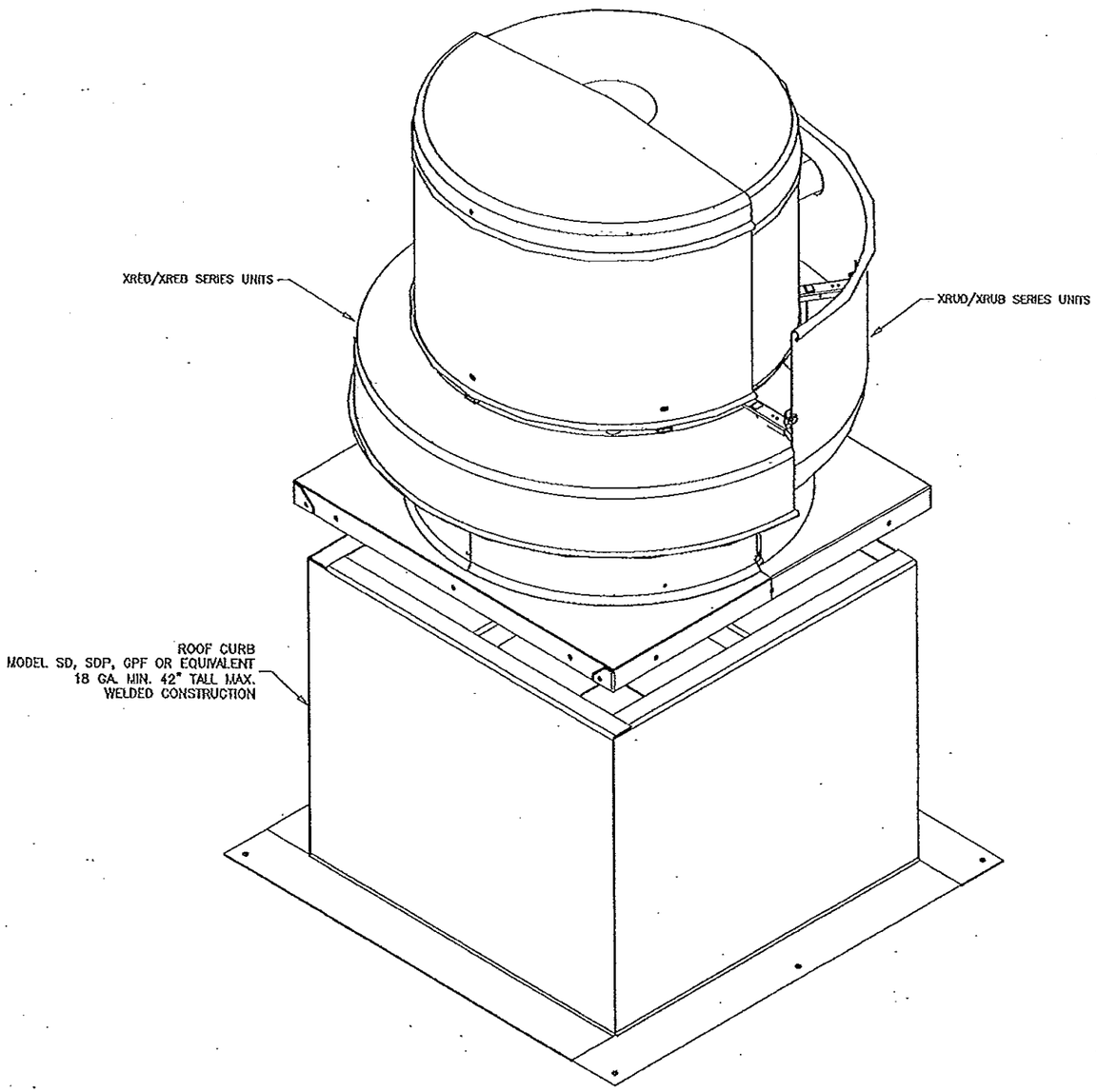

FAN TO CURB MOUNTING

UNIT SIZE	FASTENERS PER SIDE	FASTENERS TOTAL
XRUD-060-065-070-075-080-085-090-095-098-099-101-121-131-141/HP-161/HP XRUB-098-099-101/HP-121-131-141/HP-161/HP/XP XRED-060-065-070-075-080-085-090-095-097-098-099-101-103/HP-121-123-131-133 141-143/HP-163/HP XREB-071-081-091-101/HP-121-131-141/HP-161/HP	3	12
XRUD-180/HP-200 XRUB-180/HP-200/HP-220/HP-240/HP/XP XRED-150-160-170-180-183/HP-203 XREB-180/HP-200/HP-220/HP-240/HP	5	20
XREB-300/HP/XP XREB-260-300/HP	9	36

FASTENERS ON EACH SIDE OF THE FAN ARE TO BE INSTALLED WITH ONE FASTENER 4 INCHES FROM EACH EDGE AND ONE FASTENER CENTERED. THE FASTENERS ARE TO BE EQUALLY SPACED. 5/16 INCH SELF-DRILLING SCREWS.

CURB TO DECK MOUNTING

UNIT SIZE	CONCRETE ANCHORING NO. OF FASTENERS		STEEL DECK ANCHORING NO. OF FASTENERS		TIMBER ANCHORING NO. OF FASTENERS	
	PER SIDE	TOTAL	PER SIDE	TOTAL	PER SIDE	TOTAL
XRUD/XRUB ≤ 161 XRED/XREB ≤ 141	3	12	3	12	3	12
XRUD/XRUB > 161 XRED/XREB > 141	3	12	4	16	4	16

FASTENERS NEED TO BE LOCATED ON ALL 4 SIDES OF FAN CURB.

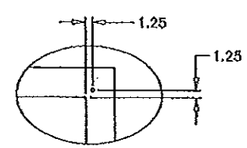

CURB CORNER ANCHOR DETAIL

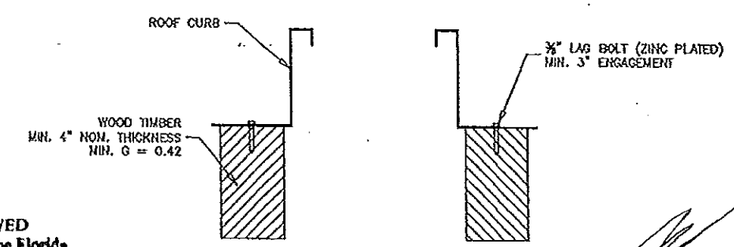

TIMBER ANCHORING

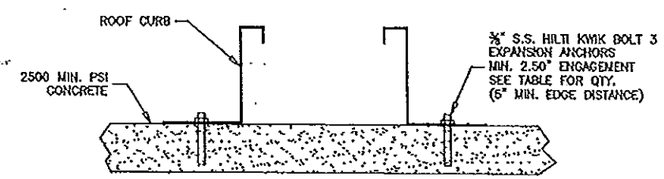

CONCRETE DECK ANCHORING

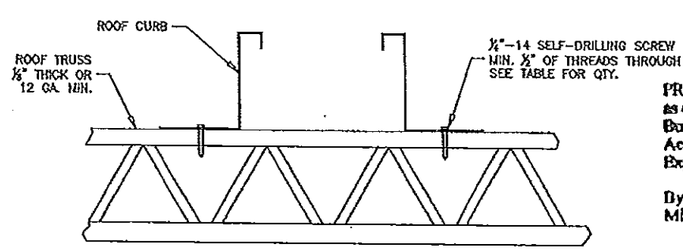

STEEL ANCHORING

PRODUCT RENEWED
as complying with the Florida Building Code
Acceptance No 14-0731.04
Expiration Date 09/23/2019
By
Miami Dade Product Control

PRODUCT REVISED
as complying with the Florida Building Code
Acceptance No 13-0220.09
Expiration Date 09/23/2014
By
Miami Dade Product Control

JAN 17 2013

RICE ENGINEERING
105 School Creek Trail
Luxemburg, WI 54217
Phone 920.845 1042
Fax 920.845 1048
www.rice-inc.com

Florida Firm No: F-01000005061
Certificate of Authorization: #9030
L. David Rice
Registration No: 50923

L. DAVID RICE
LICENSE
No. 50923
STATE OF FLORIDA
PROFESSIONAL ENGINEER

ACCUREX

XRUD/XRUB-060-300
XRED/XREB-060-300
CURB MOUNTING
SHEET 7 OF 8

YAKLOVICH
02/09/2010
1/4.5
HSA4007

REVISION	BOX	BY	DATE	SYM
ADD FASTENER TOTALS		SP1	[illegible]	1

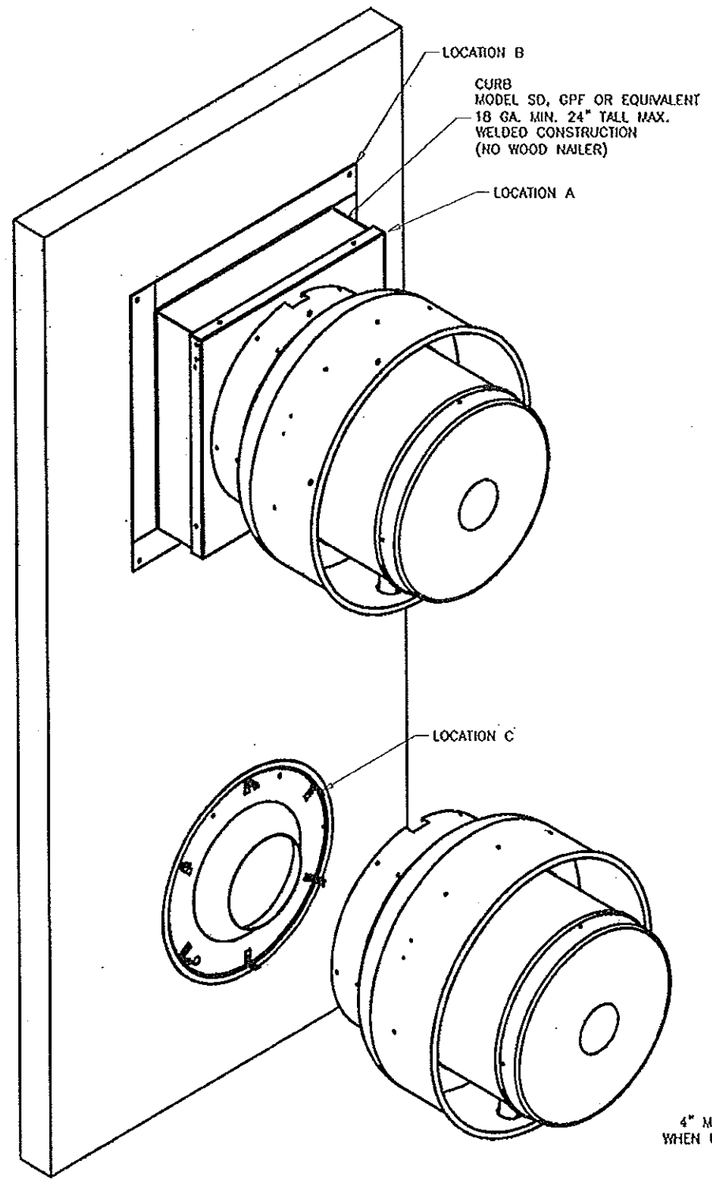

FAN TO CURB MOUNTING – LOCATION A

UNIT SIZE	FASTENERS	
	PER SIDE	TOTAL
XRUD-060-065-070-075-080-085-090-095-098-099-101-121-131-141/HP-161/HP XRUB-098-099-101/HP-121-131-141/HP-161/HP/XP	3	12
XRUD-180/HP-200 XRUB-180/HP-200/HP-220/HP-240/HP/XP	5	20
XRUB-300/HP/XP	9	36

FASTENERS ON EACH SIDE OF THE FAN ARE TO BE INSTALLED WITH ONE FASTENER 4 INCHES FROM EACH EDGE AND ONE FASTENER CENTERED. THE FASTENERS ARE TO BE EQUALLY SPACED. 5/16 INCH SELF-DRILLING SCREWS.

XSED/XSEB MOUNTING – LOCATION C

UNIT SIZE	NO. OF FASTENERS
	TOTAL
60 – 161	12
180 – 300	24

CURB TO DECK MOUNTING – LOCATION B

UNIT SIZE	CONCRETE ANCHORING NO. OF FASTENERS		STEEL DECK ANCHORING NO. OF FASTENERS		TIMBER ANCHORING NO. OF FASTENERS	
	PER SIDE	TOTAL	PER SIDE	TOTAL	PER SIDE	TOTAL
XRUD/XRUB ≤ 161	2	8	2	8	2	8
XRUD/XRUB > 161	3	12	3	12	4	16

FASTENERS NEED TO BE LOCATED ON ALL 4 SIDES OF FAN CURB, EITHER TOP AND BOTTOM OR LEFT AND RIGHT SIDES.

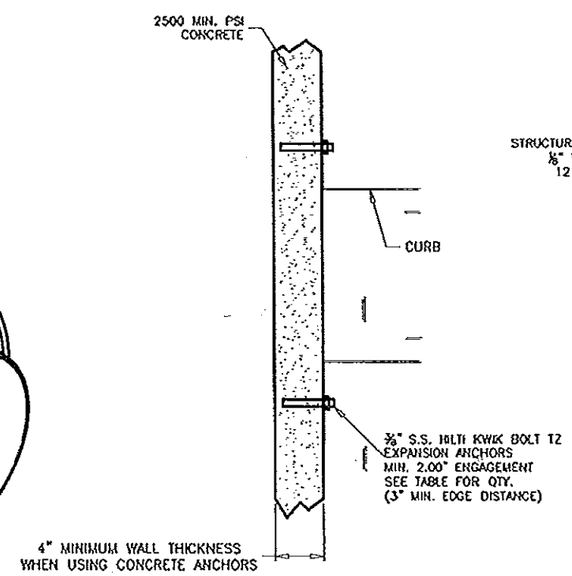

CONCRETE DECK ANCHORING

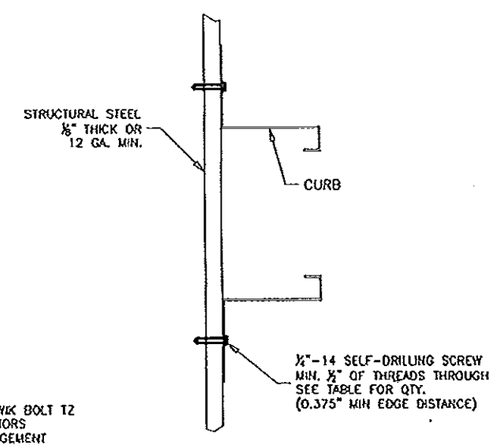

STEEL ANCHORING

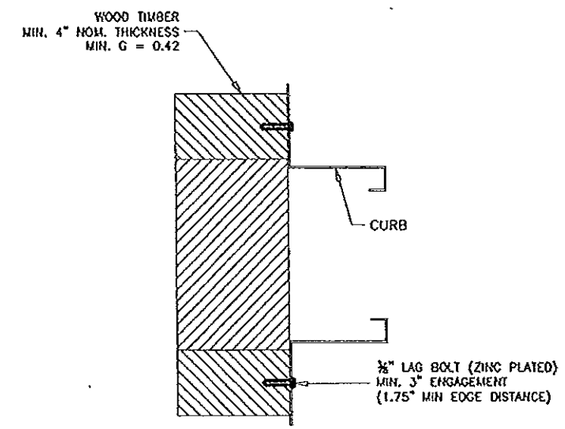

TIMBER ANCHORING

WALL SUBSTRATE DETAILS – LOCATION B AND

PRODUCT RENEWED
as complying with the Florida Building Code
Acceptance No 14-0731.04
Expiration Date 09/23/2019
By [signature]
Miami Dade Product Control

PRODUCT REVISED
as complying with the Florida Building Code
Acceptance No 13-0220.09
Expiration Date 09/23/2014
By [signature]
Miami Dade Product Control

RICE ENGINEERING
105 School Creek Trail
Luxemburg, WI 54217
Phone: 920.845.1042
Fax: 920.845.1048
www.rice-inc.com

Florida Firm No: F-01000005061
Certificate of Authorization: #9090
L. David Rice
Registration No: 50923

L. DAVID RICE
LICENSE
No. 50923
STATE OF FLORIDA
PROFESSIONAL ENGINEER

JUN 05 2013

ACCUREX

XRUD/XRUB-060-300
XSED/XSEB-060-300
SIDEWALL MOUNTING
SHEET 8 OF 8

PFEIFFER
03/02/2012
1/48
HSA4008