MIAMI-DADE COUNTY
PRODUCT CONTROL SECTION
11805 SW 26 Street, Room 208
Miami, Florida 33175-2474
T (786) 315-2590 F (786) 315-2599
www.miamidade.gov/economy

DEPARTMENT OF REGULATORY AND ECONOMIC RESOURCES (RER)
BOARD AND CODE ADMINISTRATION DIVISION

NOTICE OF ACCEPTANCE (NOA)

Craftsmen In Wood Manufacturing
5441 West Hadley Street
Phoenix, AZ 85043

SCOPE:

This NOA is being issued under the applicable rules and regulations governing the use of construction materials. The documentation submitted has been reviewed and accepted by Miami-Dade County RER -Product Control Section to be used in Miami Dade County and other areas where allowed by the Authority Having Jurisdiction (AHJ).

This NOA shall not be valid after the expiration date stated below. The Miami-Dade County Product Control Section (In Miami Dade County) and/or the AHJ (in areas other than Miami Dade County) reserve the right to have this product or material tested for quality assurance purposes. If this product or material fails to perform in the accepted manner, the manufacturer will incur the expense of such testing and the AHJ may immediately revoke, modify, or suspend the use of such product or material within their jurisdiction. RER reserves the right to revoke this acceptance, if it is determined by Miami-Dade County Product Control Section that this product or material fails to meet the requirements of the applicable building code.

This product is approved as described herein, and has been designed to comply with the Florida Building Code, including the High Velocity Hurricane Zone.

DESCRIPTION: Inswing Opaque Wood Doors-LMI

APPROVAL DOCUMENT: Drawing No **15-143**, titled "Double & Single In-swing Wood Entrance Doors", sheets 1 through 15 of 15, dated 06/28/16, prepared by Tilteco Inc., signed and sealed by Walter A. Tillit Jr. P. E., bearing the Miami-Dade County Product Control Approval stamp with the Notice of Acceptance number and approval date by the Miami-Dade County Product Control Section.

MISSILE IMPACT RATING: Large Missile Impact Resistant

Limitations:

1. Doors are **not** approved where Air and water infiltration is needed.
2. Refer to Design pressure tables sheet **2** thru **7** for O.C. spacing "**S**" of the anchors at head, sill & jambs
3. See Raised panels options in sheet **9**.
4. Two (2) surface bolts at each active & in-active panels are required.
5. See sheet **15** for corner construction.

LABELING: Each unit shall bear a permanent label with the manufacturer's name or logo, city, state and model/series and following statement: "Miami-Dade County Product Control Approved", unless otherwise noted herein.

RENEWAL of this NOA shall be considered after a renewal application has been filed and there has been no change in the applicable building code negatively affecting the performance of this product.

TERMINATION of this NOA will occur after the expiration date or if there has been a revision or change in the materials, use, and/or manufacture of the product or process. Misuse of this NOA as an endorsement of any product, for sales, advertising or any other purposes shall automatically terminate this NOA. Failure to comply with any section of this NOA shall be cause for termination and removal of NOA.

ADVERTISEMENT: The NOA number preceded by the words Miami-Dade County, Florida, and followed by the expiration date may be displayed in advertising literature. If any portion of the NOA is displayed, then it shall be done in its entirety.

INSPECTION: A copy of this entire NOA shall be provided to the user by the manufacturer or its distributors and shall be available for inspection at the job site at the request of the Building Official.

This NOA consists of this page 1 and evidence pages E-1, as well as approval document mentioned above.

The submitted documentation was reviewed by **Ishaq I. Chanda, P.E.**

MIAMI-DADE COUNTY APPROVED

6/28/16

NOA No. 14-0731.11
Expiration Date: April 21, 2021
Approval Date: June 28, 2016

NOTICE OF ACCEPTANCE: EVIDENCE SUBMITTED

A. DRAWINGS

1. Manufacturer's die drawings and sections
2. Drawing No **15-143**, titled "Double & Single In-swing Wood Entrance Doors", sheets 1 through 15 of 15, dated 06/28/16, prepared by Tilteco Inc., signed and sealed by Walter A. Tillit Jr., P.E.

B. TESTS

1. Test reports on 1) Air Infiltration Test, per FBC, TAS 202-94(Not conducted)
   2) Uniform Static Air Pressure Test, Loading per FBC, TAS 202-94(Not conducted).
   3) Water Resistance Test, per FBC, TAS 202-94.
   4) Large Missile Impact Test per FBC, TAS 201-94
   5) Cyclic Wind Pressure Loading per FBC, TAS 203-94
   6) Forced Entry Test, per FBC 2411 3.2.1 and TAS 202-94

Along with the manufacturer's parts drawings, installation diagram and marked-up drawings of outswing wood doors, prepared by Element Materials Technology, Test Report No. **EPS010117P, P1, P2 & P3**, dated 09/04/03, signed and sealed by Ramesh Patel, P.E.
Addendum letter, along w/ Marked-up parts drawings dated June 30, 2015, issued by Certified Testing Lab (Former Element Materials Technology), signed & sealed by Ramesh Patel, P.E.
Addendum letter, along w/ Marked-up parts drawings dated January 22, 2015, issued by Certified Testing Lab (Former Element Materials Technology), signed & sealed by Ramesh Patel, P.E.

C. CALCULATIONS

1. Anchor verification calculations complying w/ FBC 2014(5th Edition), prepared by Tilteco Inc., dated 09-14-15, signed and sealed by Walter A. Tillit, Jr., P.E.

D. QUALITY ASSURANCE

1. Miami–Dade Department of Regulatory and Economic Resources (RER).

E. MATERIAL CERTIFICATIONS

1. None.

F. STATEMENTS

1. Statement letter of conformance to FBC 2014, dated 09/14/15, prepared by Tilteco Inc., both signed and sealed by Walter A. Tillit Jr., P. E.
2. Statement letter of "No financial interest", dated 07/24/14, prepared by Tilteco Inc., both signed and sealed by Walter A. Tillit Jr., P. E
3. Lab compliance as part of the above referenced test report.
4. Addendum letters dated 06/30/15 and 01/22/15, issued by Certified Testing Lab (Former Element Materials Technology), signed & sealed by Ramesh Patel, P.E.

G. OTHER

1. Test proposal **11-1574** dated Jan 17, 2012, approved by RER.

Ishaq I. Chanda

Ishaq I. Chanda, P.E.
Product Control Examiner
NOA No. 14-0731.11
Expiration Date: April 21, 2021
Approval Date: June 28, 2016

GENERAL NOTES AND SPECIFICATIONS:

1. DOORS SHOWN ON THIS PRODUCT APPROVAL DOCUMENT (P.A.D.) HAVE BEEN VERIFIED FOR COMPLIANCE IN ACCORDANCE WITH THE 2014 (5th EDITION) OF THE FLORIDA BUILDING CODE. DOORS MAY BE INSTALLED AT HIGH VELOCITY HURRICANE ZONES.

DESIGN WIND LOADS SHALL BE DETERMINED AS PER SECTION 1620 OF THE ABOVE MENTIONED CODE, USING ASCE 7–10 AND SHALL NOT EXCEED THE MAXIMUM (A.S.D.) DESIGN PRESSURE RATING INDICATED ON NOTE 2 BELOW.

IN ORDER TO VERIFY THE ABOVE CONDITION, ULTIMATE DESIGN WIND LOADS DETERMINED PER ASCE 7–10 SHALL BE FIRST REDUCED TO A.S.D. DESIGN WIND LOADS BY MULTIPLYING THEM BY 0.6 IN ORDER TO COMPARE THESE W/ MAX. (A.S.D) DESIGN PRESSURE RATINGS INDICATED ON NOTE 2 BELOW.

IN ORDER TO VERIFY THAT ANCHORS ON THIS P.A.D., AS TESTED, WERE **NOT** OVER STRESSED, A 33% INCREASE IN ALLOWABLE STRESS FOR WIND LOADS WAS **NOT** USED IN THEIR ANALYSIS. A DURATION FACTOR CD= 1.60 WAS USED TO VERIFY FASTENERS IN WOOD.
DOORS'S ADEQUACY FOR IMPACT AND CYCLIC RESISTANCE HAS BEEN VERIFIED IN ACCORDANCE WITH SECTION 1626 OF THE ABOVE MENTIONED CODES PER ELEMENT LAB REPORTS No.ESP010117 P1, ESP010117 P3, ESP010117 P, ESP010117 P2, PROTOCOLS AND AS PER SUBMITTED STRUCTURAL CALCULATIONS, PERFORMED AS PER SECTION 1616 OF THE FLORIDA BUILDING CODE.

2. **MAXIMUM A.S.D. DESIGN PRESSURE RATING +66.0 psf, –66.0 psf.**

3. THESE DOORS ARE NOT APPROVED FOR AIR/WATER INFILTRATION, AND SHALL COMPLY WITH FLORIDA BUILDING CODE REQUIREMENTS.

4. ALL DOOR COMPONENTS SHALL BE AS PER BILL OF MATERIALS ON SHEET 11.

5. WOOD BUCKS, BY OTHERS, MUST BE ANCHORED PROPERLY TO TRANSFER LOADS TO THE BUILDING STRUCTURE. WOOD BUCKS MUST BE SOUTHERN PINE, G=0.55. AND SHALL COMPLY WITH SECTIONS 2411.3.3.3 & 2326 OF THE FLORIDA BUILDING CODE.

6. PROVIDE 1/4" MAX. LOAD BEARING SHIM, WHEN ALLOWED BY THIS DRAWING.

7. ALL FRAME MEMBERS SHALL BE ANCHORED TO EXISTING STRUCTURE FOLLOWING SPECS INDICATED ON SHEETS 2 THRU 10 AS APPLICABLE.

8. **THESE DOORS WILL NOT REQUIRE A HURRICANE PROTECTION DEVICE.**

9. DOORS'S MANUFACTURER LABEL SHALL BE PLACED ON A READILY VISIBLE LOCATION. ONE LABEL SHALL BE PLACED FOR EVERY OPENING. LABEL SHALL READ AS FOLLOWS:
Craftsmen In Wood, Mfg.
PHOENIX, AZ.
MIAMI–DADE COUNTY PRODUCT CONTROL APPROVED.

10. DOORS INSTALLATION SHALL COMPLY WITH SPECS INDICATED IN THIS DRAWING PLUS ANY BUILDING AND ZONING REGULATIONS PROVIDED BY THE JURISDICTION WHERE PERMIT IS APPLIED TO.

11. ALL DOORS COMPONENT EDGES WHICH REMAIN IN CONTINUOUS CONTACT WITH THE BUILDING SHALL BE SEAL/CAULK TO PREVENT WIND/RAIN INTRUSION. CAULK AND SEAL ALL AROUND FULL LENGTH.

12. (a) THIS P.A.D. PREPARED BY THIS ENGINEER IS GENERIC AND DOES NOT PROVIDE INFORMATION FOR A SITE SPECIFIC PROJECT; i.e. WHERE THE SITE CONDITIONS DEVIATE FROM THE P.A.D.

(b) CONTRACTOR TO BE RESPONSIBLE FOR THE SELECTION, PURCHASE AND INSTALLATION INCLUDING LIFE SAFETY OF THIS PRODUCT, BASED ON THIS P.A.D., PROVIDED HE/SHE DOES NOT DEVIATE FROM THE CONDITIONS DETAILED ON THIS DOCUMENT. CONSTRUCTION SAFETY AT SITE IS THE CONTRACTOR'S RESPONSIBILITY.

(c) THIS P.A.D. WILL BE CONSIDERED INVALID IF ALTERED BY ANY MEANS.

(d) SITE SPECIFIC PROJECTS SHALL BE PREPARED BY A FLORIDA REGISTERED ENGINEER OR ARCHITECT WHICH WILL BECOME THE ENGINEER OF RECORD (E.O.R.) FOR THE PROJECT AND WHO WILL BE RESPONSIBLE FOR THE PROPER USE OF THE P.A.D. ENGINEER OF RECORD, ACTING AS A DELEGATED ENGINEER TO THE P.A.D. ENGINEER SHALL SUBMIT TO THIS LATTER THE SITE SPECIFIC DRAWINGS FOR REVIEW IN ADDITION TO A MANDATORY SUBMITTAL TO MIAMI DADE COUNTY BUILDING CODE COMPLIANCE OFFICE FOR EITHER A PRODUCT APPROVAL REVISION OR A ONE TIME APPROVAL.

(e) ORIGINAL P.A.D. SHALL BEAR THE DATE, SEAL AND SIGNATURE OF THE PROFESSIONAL ENGINEER OF RECORD THAT PREPARED IT.

Approved as complying with the
Florida Building Code
Date APRIL 21, 2016
NOA# 14-0731.11
Miami Dade Product Control
By Ishaq I. Chanda

THIS DRAWING SHALL ONLY BE USED TO OBTAIN PERMITS IN THE STATE OF FLORIDA

WALTER A. TILLIT JR. LICENSE No. 44167 STATE OF FLORIDA PROFESSIONAL ENGINEER

P.E. SEAL/SIGNATURE/DATE

FLORIDA BUILDING CODE (HIGH VELOCITY HURRICANE ZONE)

© 2015 TILTECO INC.

TILTECO INC.
TILLIT TESTING & ENGINEERING COMPANY
6355 N.W. 36th. St., Ste.305, VIRGINIA GARDENS, Fl 33166
Phone : (305)871–1530 . Fax : (305)871–1531
e–mail: tilteco@aol.com
EB–0006719
WALTER A. TILLIT Jr., P.E.
FLORIDA Lic. 44167

DOUBLE & SINGLE IN-SWING WOOD ENTRANCE DOORS

Craftsmen In Wood, Mfg.
5441 West Hadley St., Phoenix, AZ 85043
Phone: (602) 296-1050 Fax: (602) 296-1052

REV. NO	DESCRIPTION	DATE	REV. No	DESCRIPTION	DATE
1	OLD 14–057	06/17/15	3		
2	IN–SWING	06/28/16	4		

M.L.
DRAWN BY

06/17/15
DATE

15–143
DRAWING No

SHEET 1 OF 15

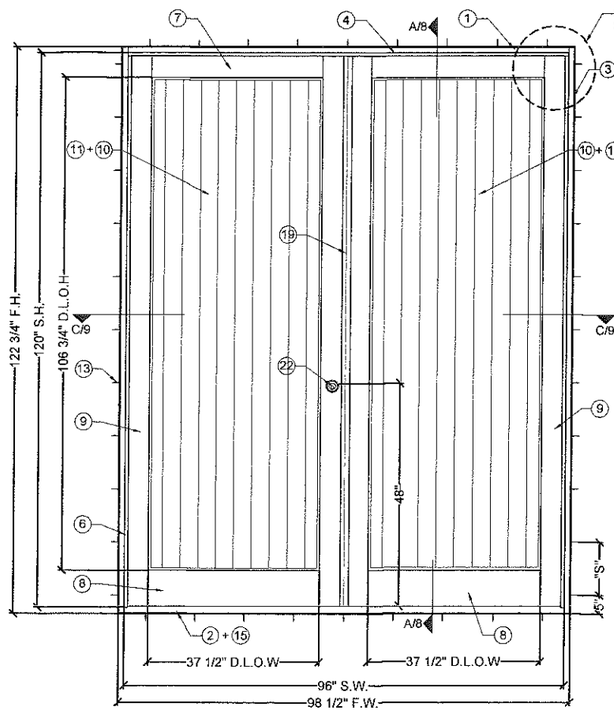

EXTERIOR ELEVATION

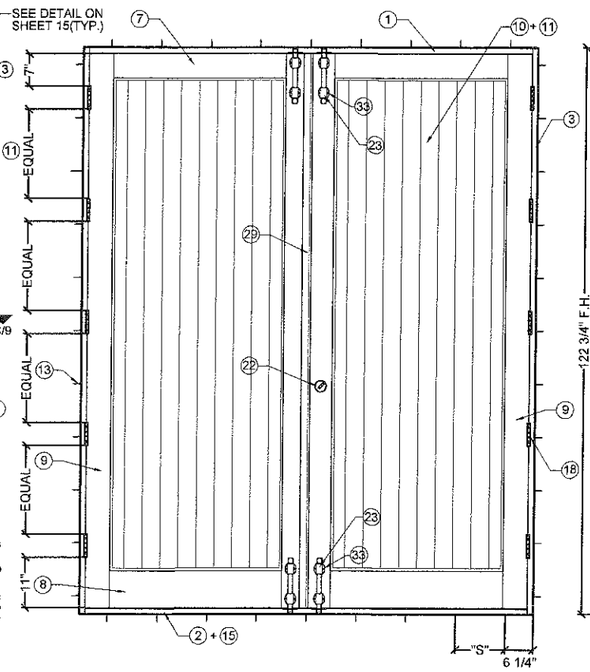

INTERIOR ELEVATION

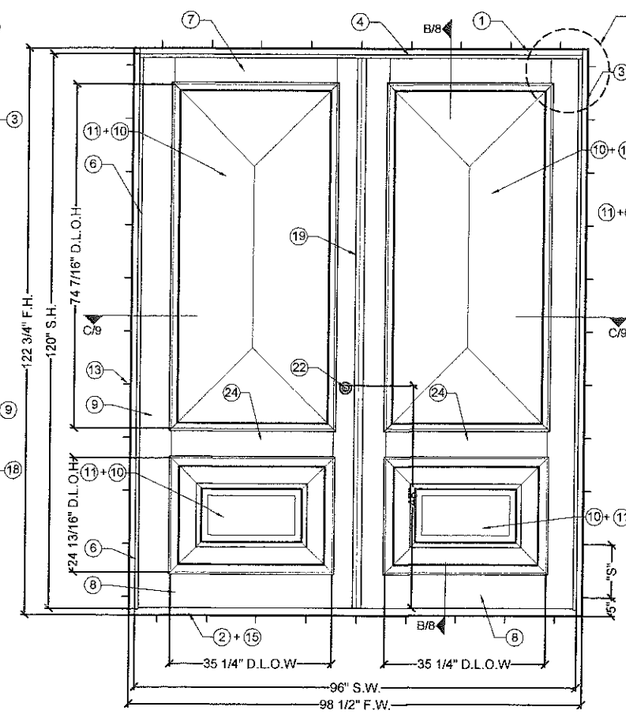

EXTERIOR ELEVATION

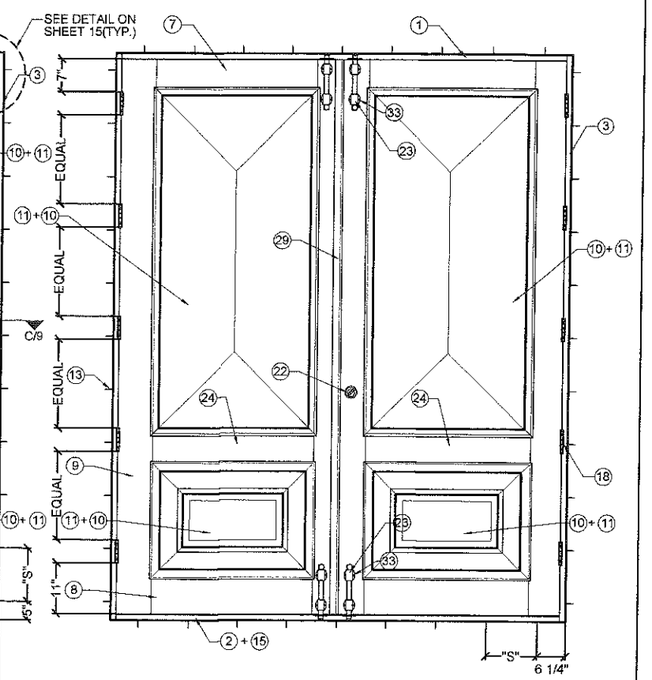

INTERIOR ELEVATION

REGULAR WOOD IN-SWING DOUBLE DOOR : (XX)

MODEL 1

N.T.S.

ANCHOR TYPE (13) MAX. ANCHOR SPACING SCHEDULE AT JAMBS, HEAD & SILL			
DESIGN PRESSURE RATING W (PSF)	"S"		
	CONCRETE (Min. f'c = 2000 psi)	CONCRETE BLOCK (Min. ASTM C-90) (Min. γ =117 pcf)	WOOD (Min. G=0.55)
50	9"	9"	6"
60	7"	7"	5"
66	7"	7"	5"

PREFIX LEGEND
- F.W.: MAX. FRAME WIDTH
- F.H.: MAX. FRAME HEIGHT
- S.W.: MAX. SASH WIDTH
- S.H.: MAX. SASH HEIGHT
- D.L.O.H, D.L.O.W : MAX. DAYLIGHT OPENING

MAX. A.S.D. DESIGN PRESSURE RATING	
POSITIVE	+66 psf *
NEGATIVE	-66 psf

* SEE NOTE 3 ON SHEET 1.

D.L.O. SCHEDULE	
D.L.O.H	PANEL HEIGHT-14 5/16"
D.L.O.W	PANEL WIDTH-12"

Approved as complying with the Florida Building Code
Date 4/21/16
NOA# 14-0731.11
Miami Dade Product Control
By Isaac L. Chank

WALTER A. TILLIT JR. LICENSE No. 44167 STATE OF FLORIDA PROFESSIONAL ENGINEER
6/28/16
P.E. SEAL, SIGNATURE/DATE

© 2015 TILTECO INC.

TILTECO INC.
TILLIT TESTING & ENGINEERING COMPANY
8355 N.W. 36th. St., Ste.305, VIRGINIA GARDENS, Fl 33166
Phone : (305)871-1530 . Fax : (305)871-1531
e-mail: tilteco@aol.com
EB-0006719
WALTER A. TILLIT Jr., P.E.
FLORIDA Lic. 44167

FLORIDA BUILDING CODE (HIGH VELOCITY HURRICANE ZONE)

DOUBLE & SINGLE IN-SWING WOOD ENTRANCE DOORS

Craftsmen In Wood, Mfg.
5441 West Hadley St., Phoenix, AZ 85043
Phone: (602) 296-1050 Fax: (602) 296-1052

REV. NO	DESCRIPTION	DATE	REV. No	DESCRIPTION	DATE
1	OLD 14-057	06/17/15	3		
2	IN-SWING	06/28/16	4		

M.L.
DRAWN BY

06/17/15
DATE

15-143
DRAWING No

SHEET 2 OF 15

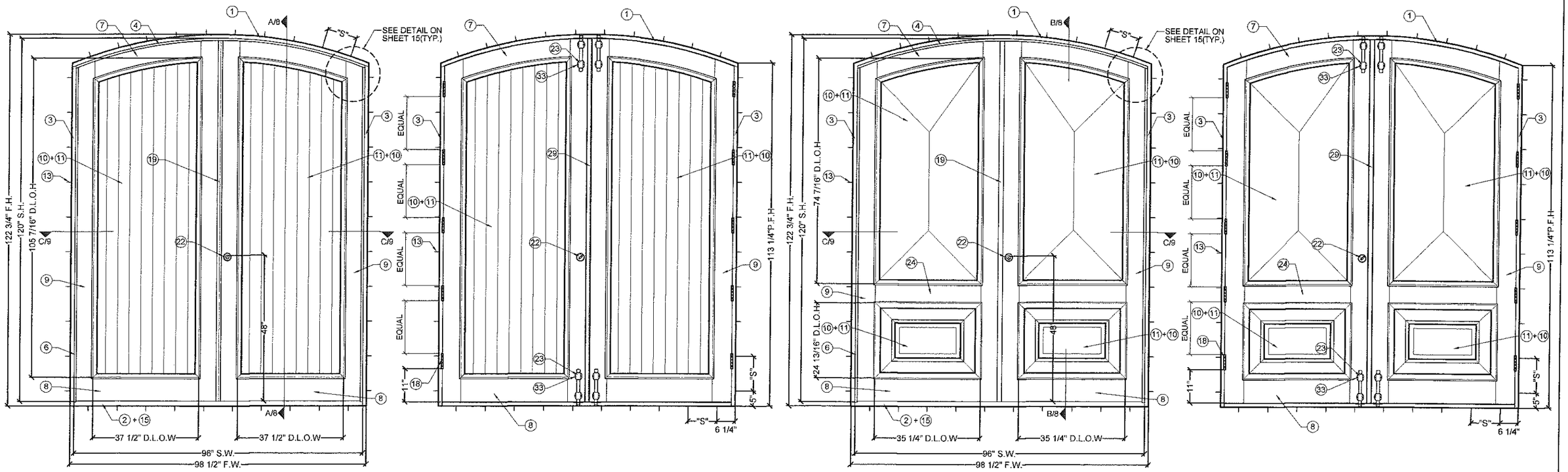

EXTERIOR ELEVATION | INTERIOR ELEVATION | EXTERIOR ELEVATION | INTERIOR ELEVATION

EYEBROW WOOD IN-SWING DOUBLE DOOR : (XX)

MODEL 2

N.T.S.

ANCHOR TYPE (13) MAX. ANCHOR SPACING SCHEDULE AT JAMBS, HEAD & SILL			
DESIGN PRESSURE RATING W (PSF)	"S"		
	CONCRETE (Min. f'c = 2000 psi)	CONCRETE BLOCK (Min. ASTM C-90) (Min. γ =117 pcf)	WOOD (Min. G=0.55)
50	9"	9"	6"
60	7"	7"	5"
66	7"	7"	5"

PREFIX LEGEND
- F.W.: MAX. FRAME WIDTH
- F.H.: MAX. FRAME HEIGHT
- S.W.: MAX. SASH WIDTH
- S.H.: MAX. SASH HEIGHT
- D.L.O.H, D.L.O.W : MAX. DAYLIGHT OPENING
- P.F.H.: MAX. PARTIAL FRAME HEIGHT

MAX. A.S.D. DESIGN PRESSURE RATING	
POSITIVE	+66 psf*
NEGATIVE	-66 psf

* SEE NOTE 3 ON SHEET 1.

D.L.O. SCHEDULE	
D.L.O.H	PANEL HEIGHT-14 5/16"
D.L.O.W	PANEL WIDTH-12"

Approved as complying with the Florida Building Code
Date 4/21/16
NOA# 14-0731.11
Miami Dade Product Control
By Ishaq I. Chanda

WALTER A. TILLIT JR. LICENSE No. 44167 STATE OF FLORIDA PROFESSIONAL ENGINEER

P.E. SEAL/SIGNATURE/DATE

FLORIDA BUILDING CODE (HIGH VELOCITY HURRICANE ZONE)

© 2015 TILTECO INC.

TILTECO INC.
TILLIT TESTING & ENGINEERING COMPANY
6355 N.W. 36th. St., Ste.305, VIRGINIA GARDENS, Fl 33166
Phone : (305)871-1530 . Fax : (305)871-1531
e-mail: tilteco@aol.com
EB-0006719
WALTER A. TILLIT Jr., P.E.
FLORIDA Lic. 44167

DOUBLE & SINGLE IN-SWING WOOD ENTRANCE DOORS

Craftsmen In Wood, Mfg.
5441 West Hadley St., Phoenix, AZ 85043
Phone: (602) 296-1050 Fax: (602) 296-1052

REV. NO	DESCRIPTION	DATE	REV. No	DESCRIPTION	DATE
1	OLD 14-057	06/17/15	3		
2	IN-SWING	06/28/16	4		

M.L. DRAWN BY	
06/17/15 DATE	
15-143 DRAWING No	
SHEET 3 OF 15	

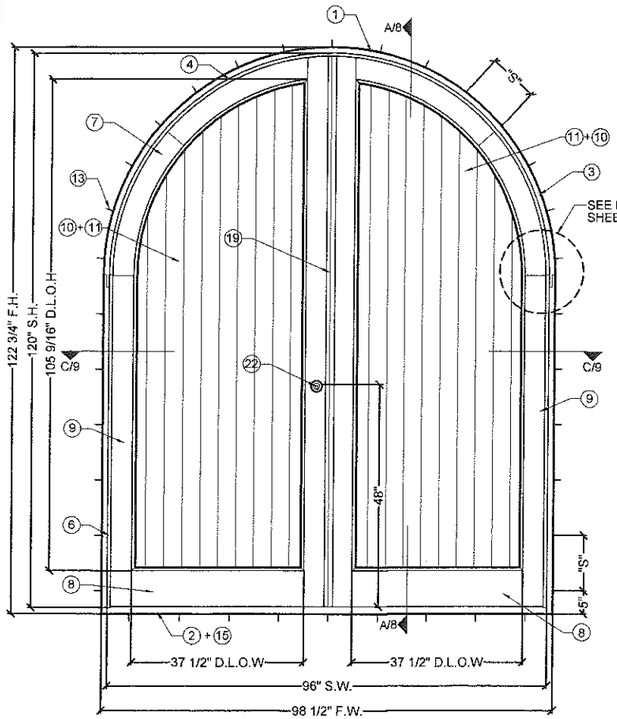

EXTERIOR ELEVATION

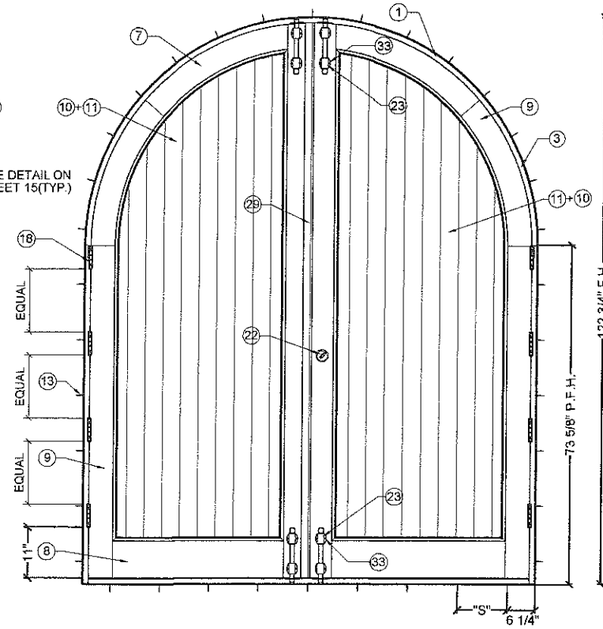

INTERIOR ELEVATION

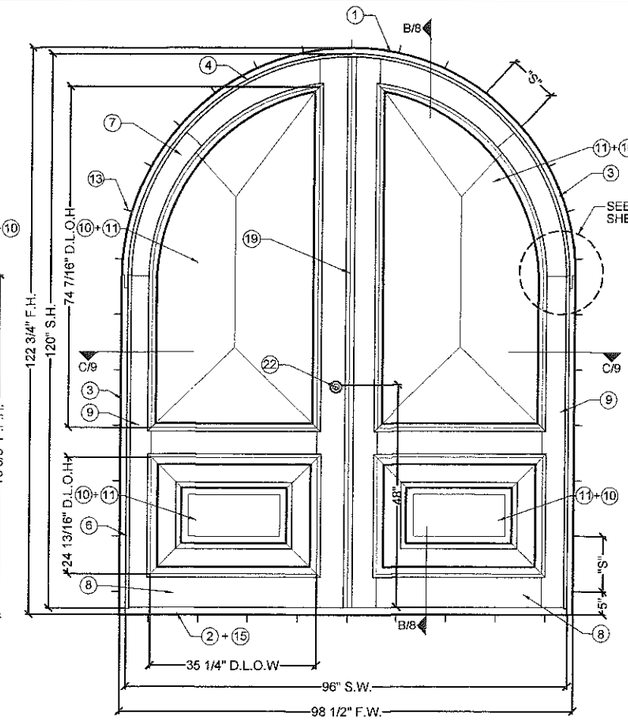

EXTERIOR ELEVATION

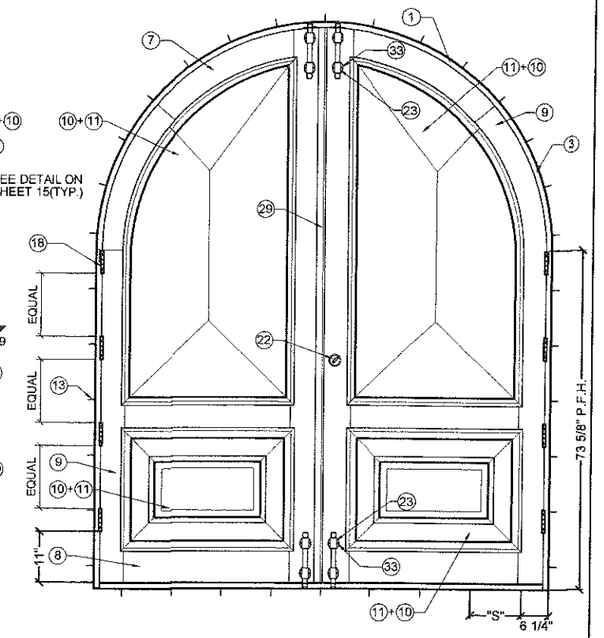

INTERIOR ELEVATION

ARCH WOOD IN-SWING DOUBLE DOOR: (XX)

MODEL 3

N.T.S.

ANCHOR TYPE (13) MAX. ANCHOR SPACING SCHEDULE AT JAMBS, HEAD & SILL			
DESIGN PRESSURE RATING W (PSF)	"S"		
	CONCRETE (Min. f'c = 2000 psi)	CONCRETE BLOCK (Min. ASTM C-90) (Min. γ =117 pcf)	WOOD (Min. G=0.55)
50	9"	9"	6"
60	7"	7"	5"
66	7"	7"	5"

PREFIX LEGEND
- F.W.: MAX. FRAME WIDTH
- F.H.: MAX. FRAME HEIGHT
- S.W.: MAX. SASH WIDTH
- S.H.: MAX. SASH HEIGHT
- D.L.O.H, D.L.O.W : MAX. DAYLIGHT OPENING
- P.F.H.: MAX. PARTIAL FRAME HEIGHT

MAX. A.S.D. DESIGN PRESSURE RATING	
POSITIVE	+66 psf *
NEGATIVE	-66 psf

* SEE NOTE 3 ON SHEET 1.

D.L.O. SCHEDULE	
D.L.O.H	PANEL HEIGHT-14 5/16"
D.L.O.W	PANEL WIDTH-12"

Approved as complying with the Florida Building Code
Date 4/21/16
NOA# 14-0731.11
Miami Dade Product Control
By Ichael Chanda

WALTER A. TILLIT JR. LICENSE No. 44167 STATE OF FLORIDA PROFESSIONAL ENGINEER

P.E. SEAL/SIGNATURE/DATE

© 2015 TILTECO INC.

TILTECO INC.
TILLIT TESTING & ENGINEERING COMPANY
6355 N.W. 36th. St., Ste.305, VIRGINIA GARDENS, Fl 33166
Phone : (305)871-1530 . Fax : (305)871-1531
e-mail: tilteco@aol.com
EB-0006719
WALTER A. TILLIT Jr., P.E.
FLORIDA Lic. 44167

FLORIDA BUILDING CODE (HIGH VELOCITY HURRICANE ZONE)

DOUBLE & SINGLE IN-SWING WOOD ENTRANCE DOORS

Craftsmen In Wood, Mfg.
5441 West Hadley St., Phoenix, AZ 85043
Phone: (602) 296-1050 Fax: (602) 296-1052

REV. NO	DESCRIPTION	DATE	REV. No	DESCRIPTION	DATE
1	OLD 14-057	06/17/15	3		
2	IN-SWING	06/28/16	4		

M.L.
DRAWN BY

06/17/15
DATE

15-143
DRAWING No

SHEET 4 OF 15

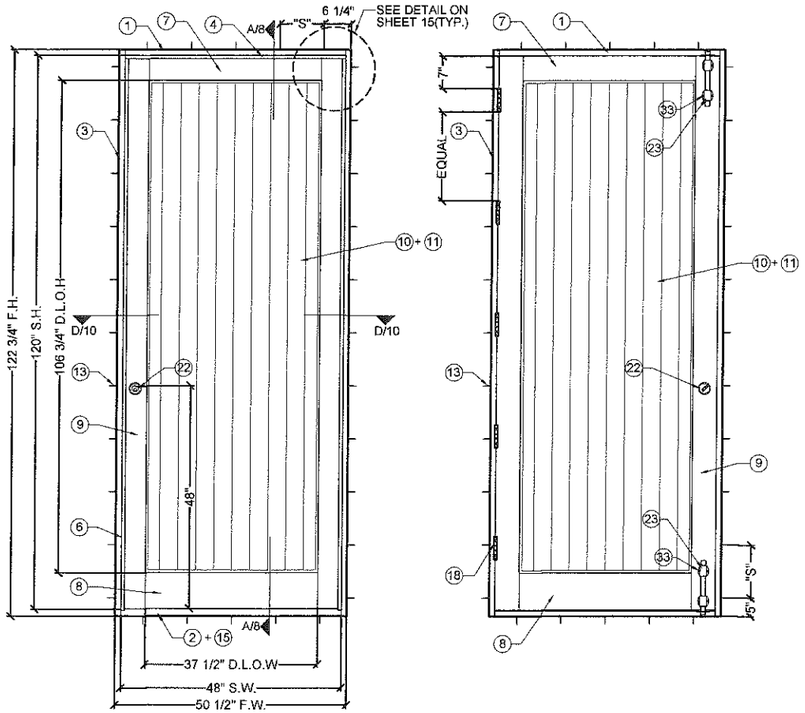

EXTERIOR ELEVATION

INTERIOR ELEVATION

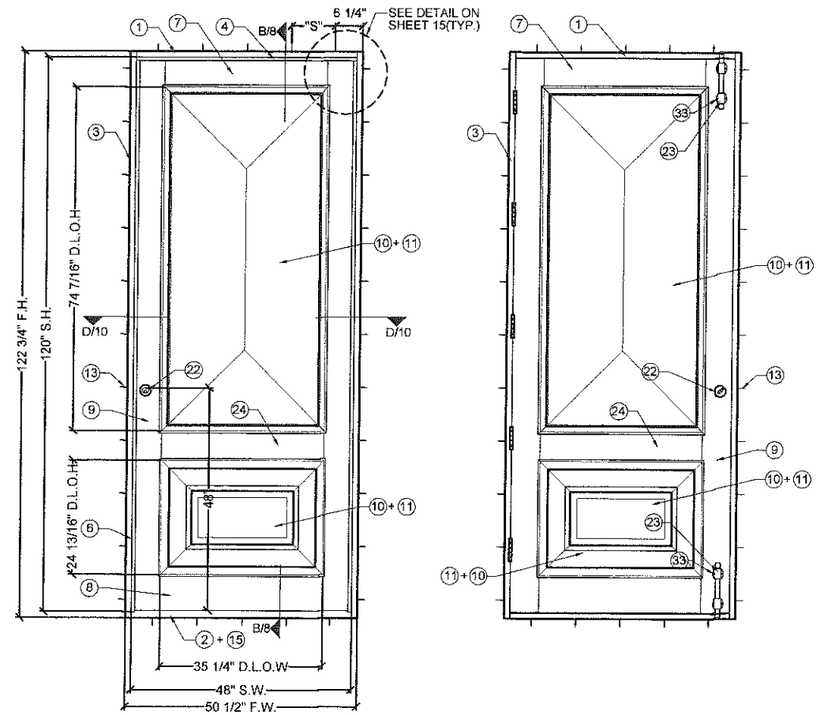

EXTERIOR ELEVATION

INTERIOR ELEVATION

ANCHOR TYPE (13) MAX. ANCHOR SPACING SCHEDULE AT JAMBS, HEAD & SILL		
DESIGN PRESSURE RATING W (PSF)	"S"	
	CONCRETE (Min. f'c = 2000 psi) OR CONCRETE BLOCK (Min. ASTM C-90) (Min. γ =117 pcf)	WOOD (Min. G=0.55)
50	10"	10"
60	10"	10"
66	10"	9"

REGULAR WOOD IN-SWING SINGLE DOOR: (X)
MODEL 1

N.T.S.

PREFIX LEGEND
- F.W.: MAX. FRAME WIDTH
- F.H.: MAX. FRAME HEIGHT
- S.W.: MAX. SASH WIDTH
- S.H.: MAX. SASH HEIGHT
- D.L.O.H, D.L.O.W : MAX. DAYLIGHT OPENING

MAX. A.S.D. DESIGN PRESSURE RATING	
POSITIVE	+66 psf*
NEGATIVE	-66 psf

SEE NOTE 3 ON SHEET 1.

D.L.O. SCHEDULE	
D.L.O.H	PANEL HEIGHT-14 5/16"
D.L.O.W	PANEL WIDTH-12"

Approved as complying with the Florida Building Code
Date 4/21/16
NOA# 14-0731.11
Miami Dade Product Control
By Ishaq I. Chunk

WALTER A. TILLIT JR. LICENSE No. 44167 STATE OF FLORIDA PROFESSIONAL ENGINEER

LIC. SEAL SIGNATURE/DATE

© 2015 TILTECO INC.

TILTECO INC.
TILLIT TESTING & ENGINEERING COMPANY
6355 N.W. 36th. St., Ste.305, VIRGINIA GARDENS, Fl 33166
Phone : (305)871-1530 . Fax : (305)871-1531
e-mail: tilteco@aol.com
EB-0006719
WALTER A. TILLIT Jr., P.E.
FLORIDA Lic. 44167

FLORIDA BUILDING CODE (HIGH VELOCITY HURRICANE ZONE)

DOUBLE & SINGLE IN-SWING WOOD ENTRANCE DOORS

Craftsmen In Wood, Mfg.
5441 West Hadley St., Phoenix, AZ 85043
Phone: (602) 296-1050 Fax: (602) 296-1052

REV. NO	DESCRIPTION	DATE	REV. No	DESCRIPTION	DATE
1	OLD 14-057	08/17/15	3		
2	IN-SWING	08/28/15	4		

M.L.
DRAWN BY

06/17/15
DATE

15-143
DRAWING No

SHEET 5 OF 15

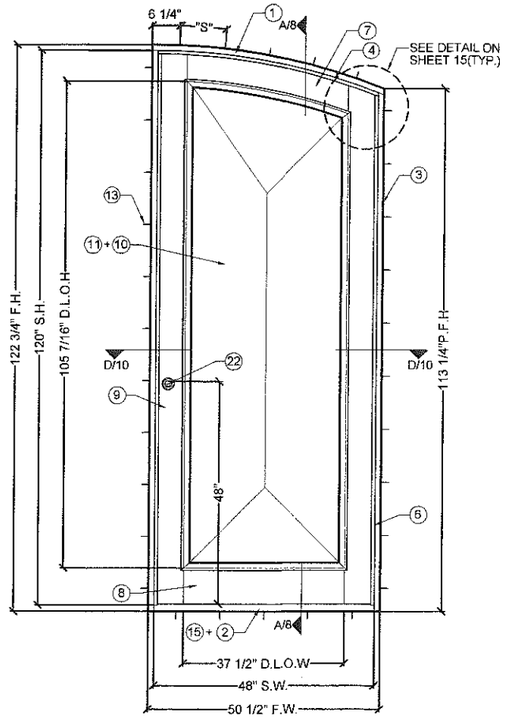

EXTERIOR ELEVATION

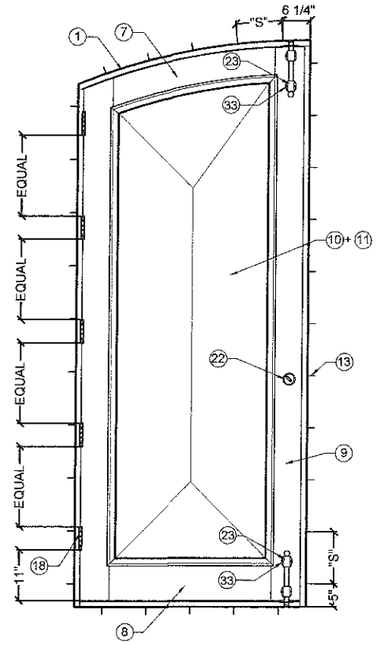

INTERIOR ELEVATION

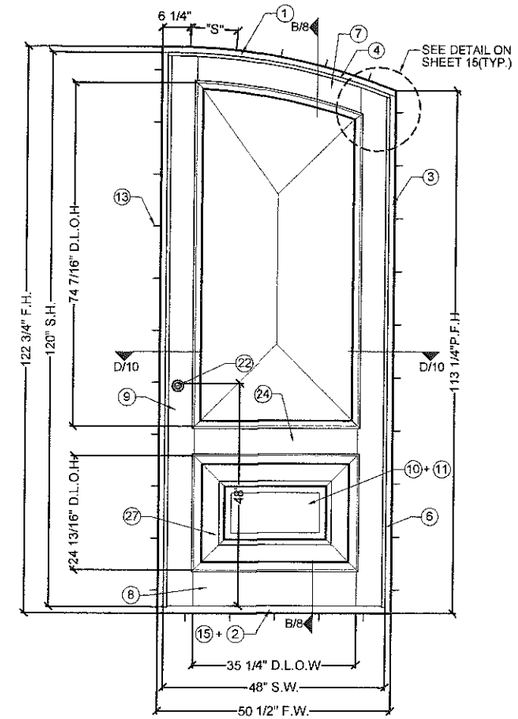

EXTERIOR ELEVATION

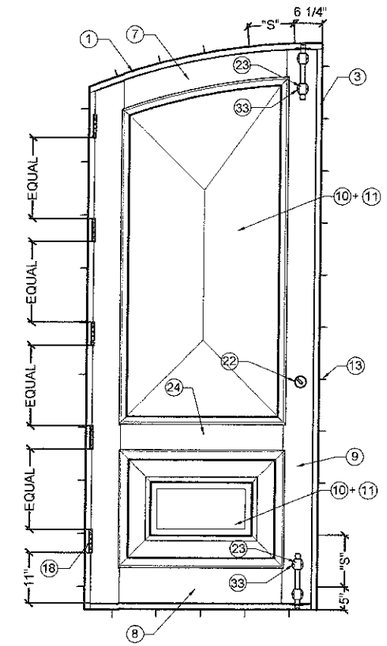

INTERIOR ELEVATION

EYEBROW WOOD IN-SWING SINGLE DOOR: (X)
MODEL 2
N.T.S.

ANCHOR TYPE (13) MAX. ANCHOR SPACING SCHEDULE AT JAMBS, HEAD & SILL		
DESIGN PRESSURE RATING W (PSF)	"S"	
	CONCRETE (Min. f'c = 2000 psi) OR CONCRETE BLOCK (Min. ASTM C-90) (Min. γ =117 pcf)	WOOD (Min. G=0.55)
50	10"	10"
60	10"	10"
66	10"	9"

PREFIX LEGEND
- F.W.: MAX. FRAME WIDTH
- F.H.: MAX. FRAME HEIGHT
- S.W.: MAX. SASH WIDTH
- S.H.: MAX. SASH HEIGHT
- D.L.O.H, D.L.O.W : MAX. DAYLIGHT OPENING
- P.F.H.: MAX. PARTIAL FRAME HEIGHT

MAX. A.S.D. DESIGN PRESSURE RATING	
POSITIVE	+66 psf*
NEGATIVE	-66 psf

* SEE NOTE 3 ON SHEET 1.

D.L.O. SCHEDULE	
D.L.O.H	PANEL HEIGHT-14 5/16"
D.L.O.W	PANEL WIDTH-12"

Approved as complying with the Florida Building Code
Date 4/21/16
NOA# 14-0731.11
Miami Dade Product Control
By Ishwar L. Chanda

WALTER A. TILLIT JR. LICENSE No. 44167 STATE OF FLORIDA PROFESSIONAL ENGINEER

SEAL/SIGNATURE/DATE

FLORIDA BUILDING CODE (HIGH VELOCITY HURRICANE ZONE)

© 2015 TILTECO INC.

TILTECO INC.
TILLIT TESTING & ENGINEERING COMPANY
6355 N.W. 36th. St., Ste.305, VIRGINIA GARDENS, Fl 33166
Phone : (305)871-1530 . Fax : (305)871-1531
e-mail: tilteco@aol.com
EB-0006719
WALTER A. TILLIT Jr., P.E.
FLORIDA Lic. 44167

DOUBLE & SINGLE IN-SWING WOOD ENTRANCE DOORS

Craftsmen In Wood, Mfg.
5441 West Hadley St., Phoenix, AZ 85043
Phone: (602) 296-1050 Fax: (602) 296-1052

REV. NO	DESCRIPTION	DATE	REV. No	DESCRIPTION	DATE
1	OLD 14-057	06/17/15	3		
2	IN-SWING	06/29/16	4		

M.L.
DRAWN BY

06/17/15
DATE

15-143
DRAWING No

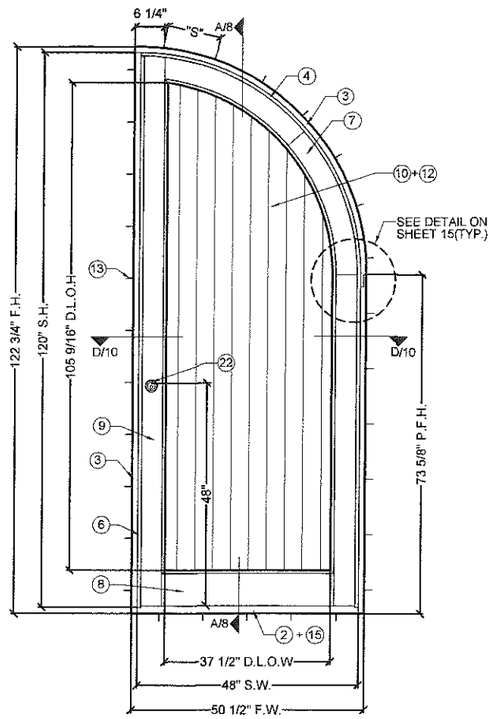

EXTERIOR ELEVATION

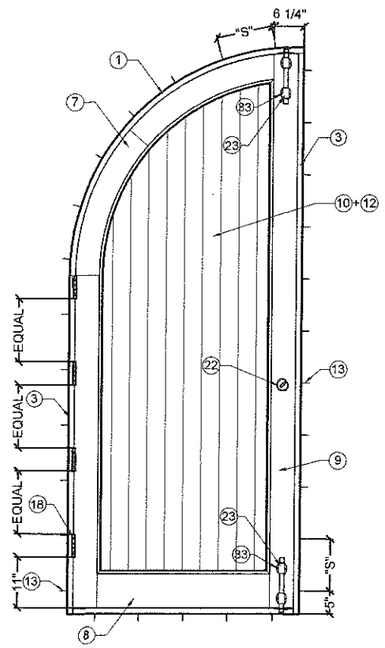

INTERIOR ELEVATION

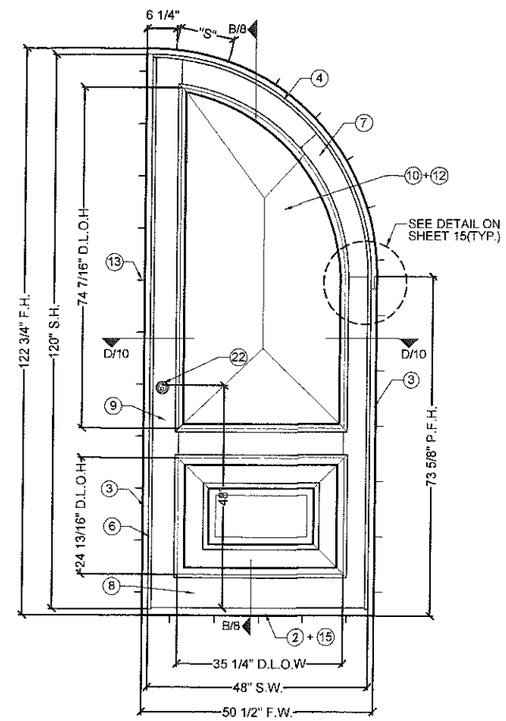

EXTERIOR ELEVATION

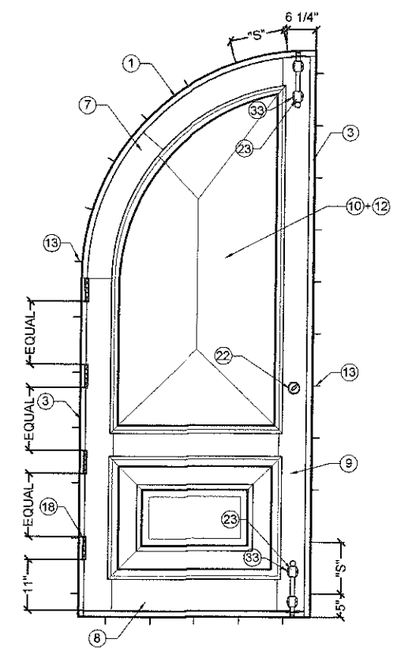

INTERIOR ELEVATION

ARCH WOOD IN-SWING SINGLE DOOR: (X)
MODEL 3
N.T.S.

ANCHOR TYPE (13) MAX. ANCHOR SPACING SCHEDULE AT JAMBS, HEAD & SILL		
DESIGN PRESSURE RATING W (PSF)	"S"	
	CONCRETE (Min. f'c = 2000 psi) OR CONCRETE BLOCK (Min. ASTM C-90) (Min. γ =117 pcf)	WOOD (Min. G=0.55)
50	10"	10"
60	10"	10"
66	10"	9"

PREFIX LEGEND
- F.W.: MAX. FRAME WIDTH
- F.H.: MAX. FRAME HEIGHT
- S.W.: MAX. SASH WIDTH
- S.H.: MAX. SASH HEIGHT
- D.L.O.H, D.L.O.W : MAX. DAYLIGHT OPENING
- P.F.H.: MAX. PARTIAL FRAME HEIGHT

MAX. A.S.D. DESIGN PRESSURE RATING	
POSITIVE	+66 psf*
NEGATIVE	-66 psf

SEE NOTE 3 ON SHEET 1.

D.L.O. SCHEDULE	
D.L.O.H	PANEL HEIGHT-14 5/16"
D.L.O.W	PANEL WIDTH-12"

Approved as complying with the Florida Building Code
Date 4/21/16
NOA# 14-0731.11
Miami Dade Product Control
By Ishaq I. Chanda

FLORIDA BUILDING CODE (HIGH VELOCITY HURRICANE ZONE)

WALTER A. TILLIT JR. LICENSE No. 44167 STATE OF FLORIDA PROFESSIONAL ENGINEER

P.E. SEAL/SIGNATURE/DATE

© 2015 TILTECO INC.

TILTECO INC.
TILLIT TESTING & ENGINEERING COMPANY
6355 N.W. 36th. St., Ste.305, VIRGINIA GARDENS, Fl 33166
Phone : (305)871-1530 . Fax : (305)871-1531
e-mail: tilteco@aol.com
EB-0006719
WALTER A. TILLIT Jr., P.E.
FLORIDA Lic. 44167

DOUBLE & SINGLE IN-SWING WOOD ENTRANCE DOORS

Craftsmen In Wood, Mfg.
5441 West Hadley St., Phoenix, AZ 85043
Phone: (602) 296-1050 Fax: (602) 296-1052

REV. NO	DESCRIPTION	DATE	REV. No	DESCRIPTION	DATE
1	OLD 14-057	06/17/15	3		
2	IN-SWING	06/28/16	4		

M.L. DRAWN BY
06/17/15 DATE
15-143 DRAWING No
SHEET 7 OF 15

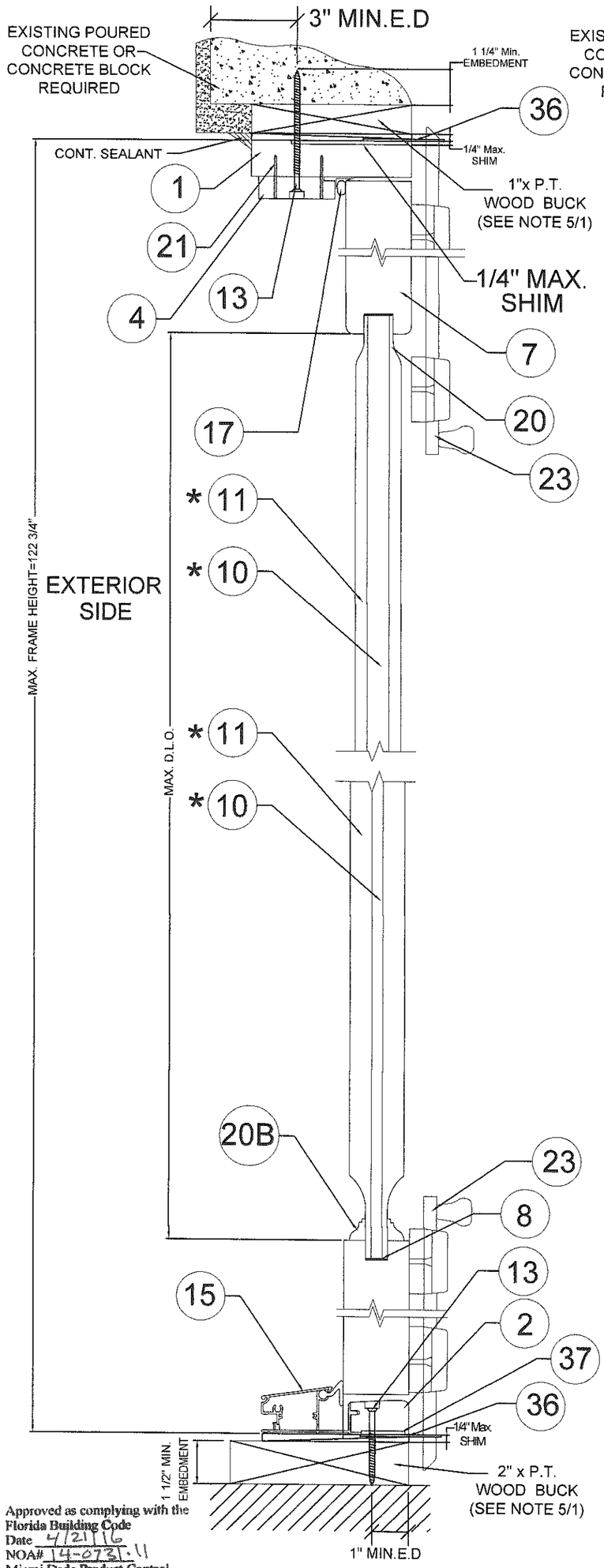

SECTION A
SCALE: 1/4"=1"

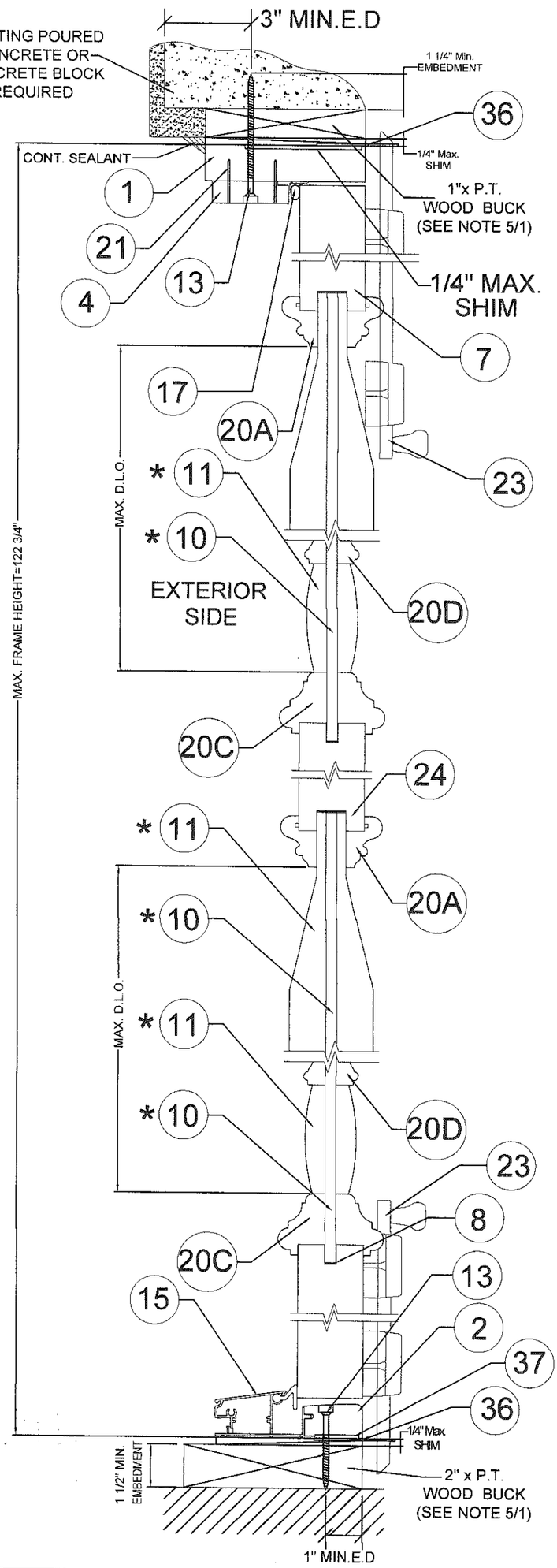

SECTION B
SCALE: 1/4"=1"

Approved as complying with the Florida Building Code
Date 4/21/16
NOA# 14-0731.11
Miami Dade Product Control
By

* GLAZING WOOD PANEL DETAIL OPTIONS #1, 2 & 3, SHOWN ON SHEET 10 MAY BE COMBINED AS NEEDED TO SUIT ANY INSTALLATION.

WALTER A. TILLIT JR. LICENSE No. 44167 STATE OF FLORIDA PROFESSIONAL ENGINEER

SEAL/SIGNATURE/DATE

© 2015 TILTECO INC.

TILTECO INC.
TILLIT TESTING & ENGINEERING COMPANY
6355 N.W. 36th. St., Ste.305, VIRGINIA GARDENS, Fl 33166
Phone : (305)871-1530 , Fax : (305)871-1531
e-mail: tilteco@aol.com
EB-0006719
WALTER A. TILLIT Jr., P.E.
FLORIDA Lic. 44167

FLORIDA BUILDING CODE (HIGH VELOCITY HURRICANE ZONE)

DOUBLE & SINGLE IN-SWING WOOD ENTRANCE DOORS

Craftsmen In Wood, Mfg.
5441 West Hadley St., Phoenix, AZ 85043
Phone: (602) 296-1050 Fax: (602) 296-1052

REV. NO	DESCRIPTION	DATE	REV. No	DESCRIPTION	DATE
1	OLD 14-057	06/17/15	3		
2	IN-SWING	06/22/15	4		

M.L.	DRAWN BY
06/17/15	DATE
15-143	DRAWING No
SHEET 8 OF 15	

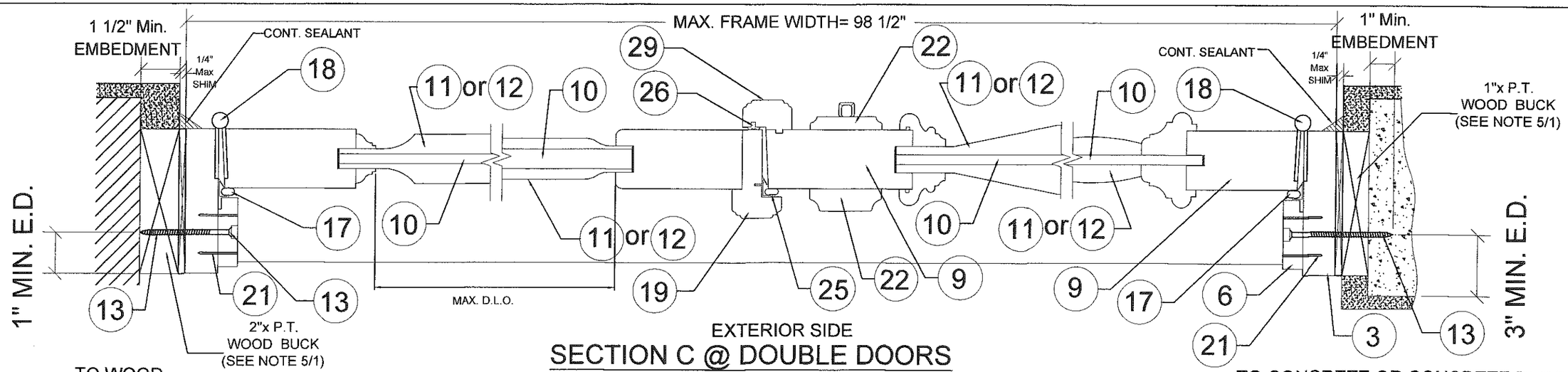

SECTION C @ DOUBLE DOORS

SCALE: 1/4"=1"

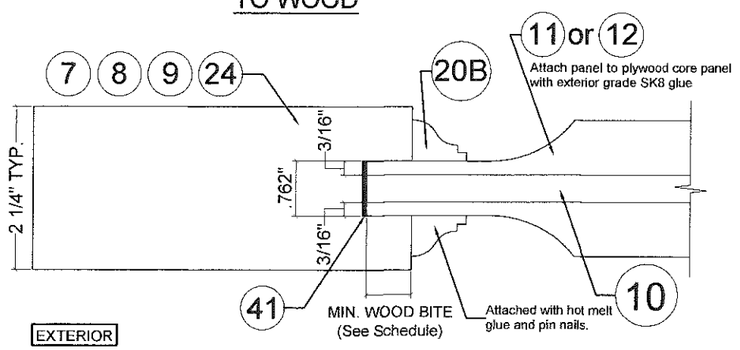

GLAZING WOOD PANEL DETAIL DOUBLE DOORS OPTION #1

SCALE: 1/2"=1"

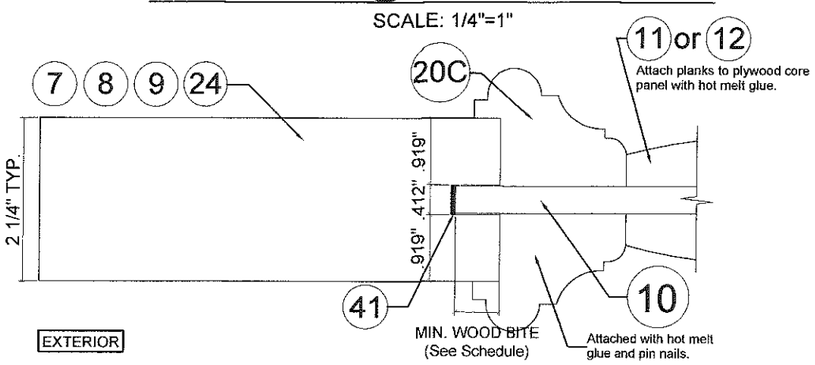

GLAZING WOOD PANEL DETAIL @DOUBLE DOORS OPTION #2

SCALE: 1/2"=1"

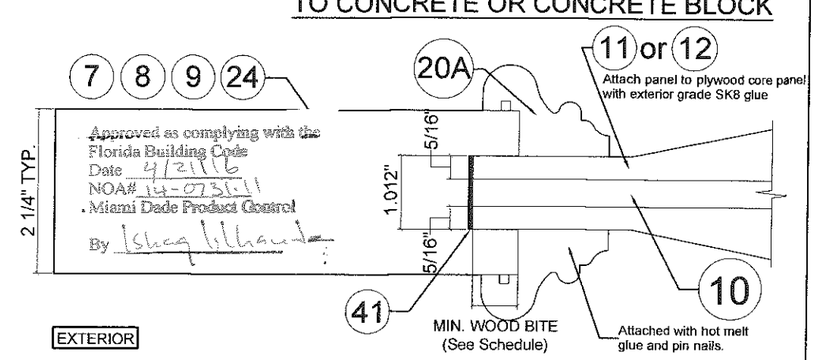

Approved as complying with the Florida Building Code
Date 4/21/16
NOA# 14-0731.11
Miami Dade Product Control
By Ishaq Lilhaus

GLAZING WOOD PANEL DETAIL @ DOUBLE DOORS OPTION #3

SCALE: 1/2"=1"

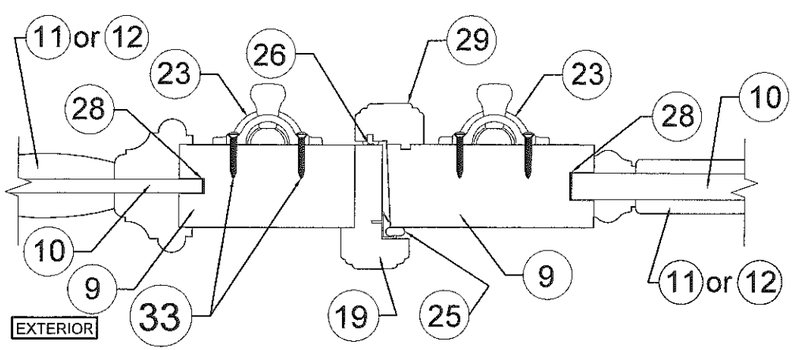

CENTER TOP/BOTTOM SECTION AT SURFACE BOLT 23 @ DOUBLE DOORS

SCALE: 1/4"=1"

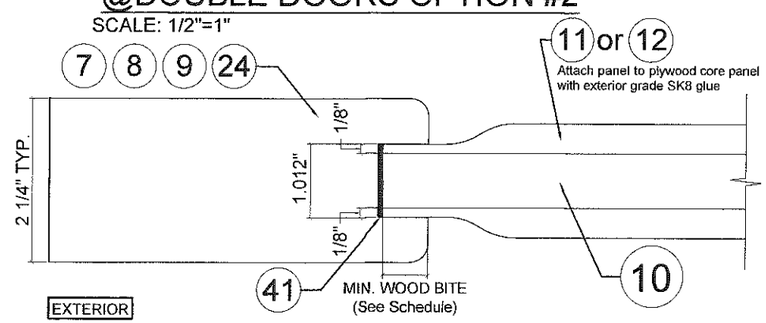

GLAZING WOOD PANEL DETAIL @ DOUBLE DOORS OPTION #4

SCALE: 1/2"=1"

WOOD BITE SCHEDULE	
DOOR TYPE	MIN. BITE @ OPTION #1, #2, #3, #4
REGULAR	11/16"
ARCH	11/16"
EYEBROW	11/16"

WALTER A. TILLIT JR. LICENSE No. 44167 STATE OF FLORIDA PROFESSIONAL ENGINEER

SEAL/SIGNATURE/DATE

© 2015 TILTECO INC.

TILTECO INC.
TILLIT TESTING & ENGINEERING COMPANY
6355 N.W. 36th. St., Ste.305, VIRGINIA GARDENS, Fl 33166
Phone : (305)871-1530 . Fax : (305)871-1531
e-mail: tilteco@aol.com
EB-0006719
WALTER A. TILLIT Jr., P.E.
FLORIDA Lic. 44167

FLORIDA BUILDING CODE (HIGH VELOCITY HURRICANE ZONE)

DOUBLE & SINGLE IN-SWING WOOD ENTRANCE DOORS

Craftsmen In Wood, Mfg.
5441 West Hadley St., Phoenix, AZ 85043
Phone: (602) 296-1050 Fax: (602) 296-1052

REV. NO	DESCRIPTION	DATE	REV. No	DESCRIPTION	DATE
1	OLD 14-057	08/17/15	3		
2	IN-SWING	08/28/16	4		

M.L. DRAWN BY

06/17/15 DATE

15-143 DRAWING No

SHEET 9 OF 15

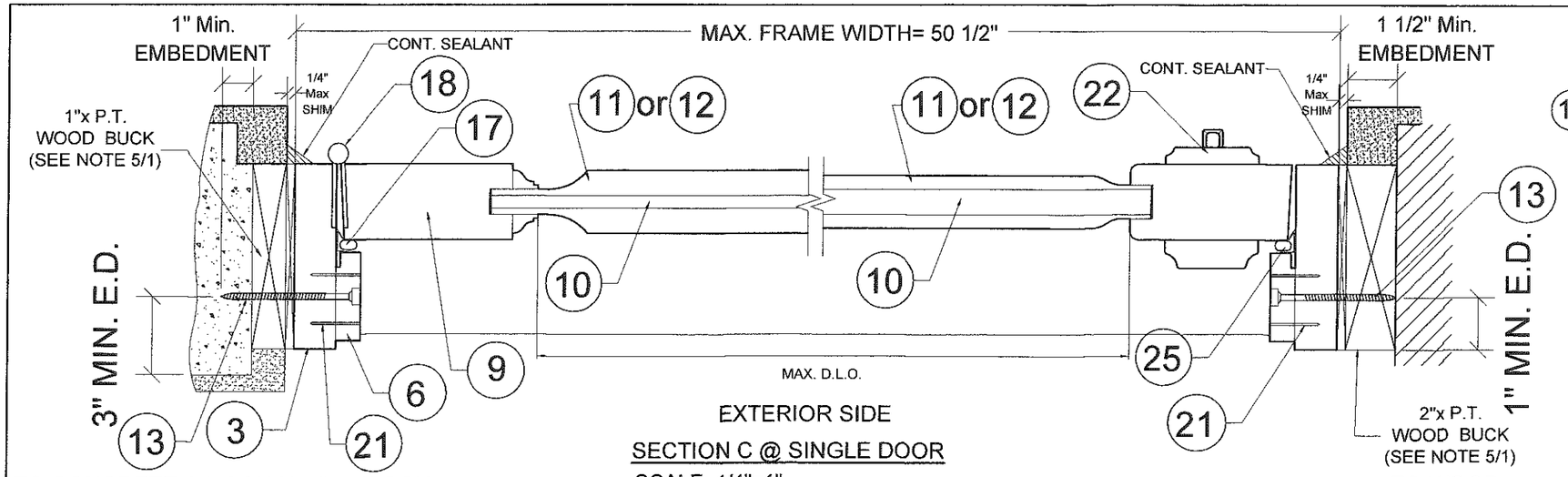

SECTION C @ SINGLE DOOR
SCALE: 1/4"=1"

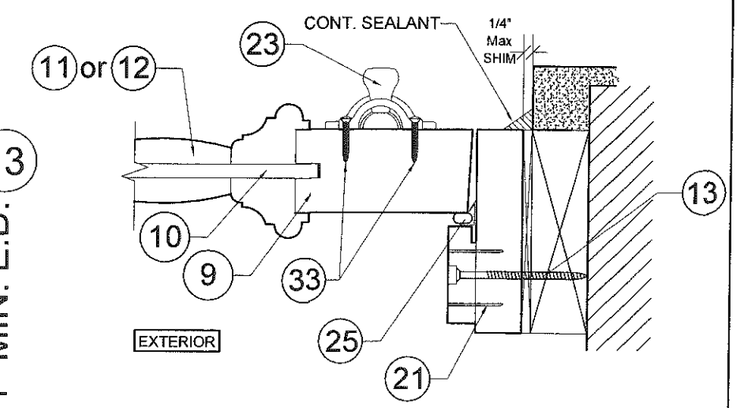

CENTER TOP/BOTTOM SECTION AT SURFACE BOLT 23 @ SINGLE DOOR
SCALE: 1/4"=1"

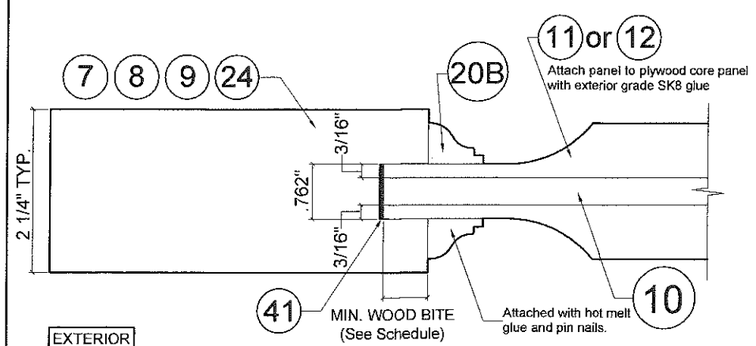

GLAZING WOOD PANEL DETAIL @ SINGLE DOOR OPTION #1
SCALE: 1/2"=1"

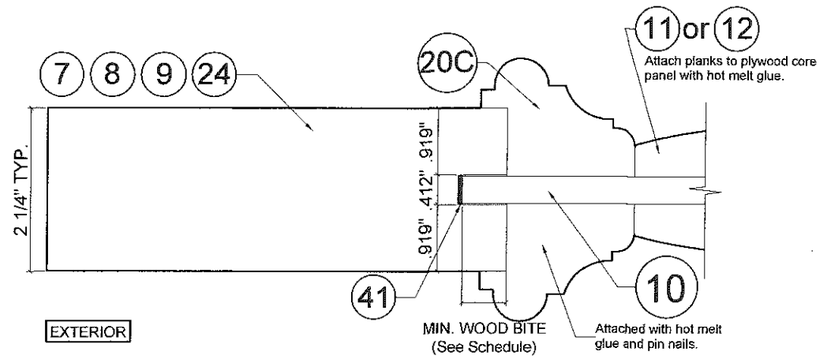

GLAZING WOOD PANEL DETAIL @ SINGLE DOOR OPTION #2
SCALE: 1/2"=1"

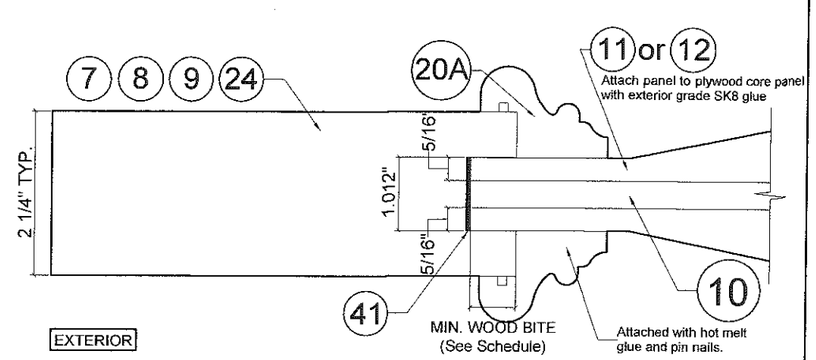

GLAZING WOOD PANEL DETAIL @ SINGLE DOOR OPTION #3
SCALE: 1/2"=1"

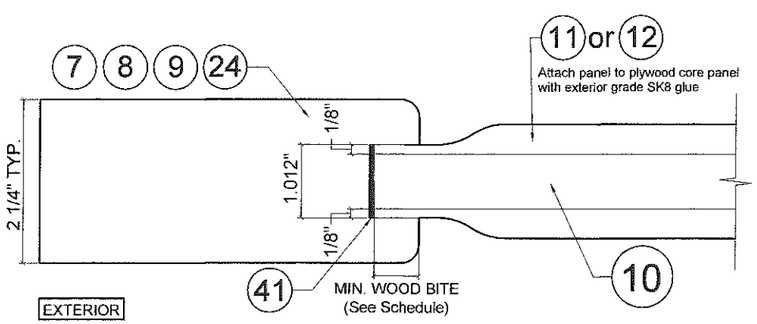

GLAZING WOOD PANEL DETAIL @ SINGLE DOOR OPTION #4
SCALE: 1/2"=1"

WOOD BITE SCHEDULE	
DOOR TYPE	MIN. BITE @ OPTION #1, #2, #3, #4
REGULAR	11/16"
ARCH	11/16"
EYEBROW	11/16"

Approved as complying with the Florida Building Code
Date 4/21/16
NOA# 14-0731.11
Miami Dade Product Control
By [signature]

WALTER A. TILLIT JR. LICENSE No. 44167 STATE OF FLORIDA PROFESSIONAL ENGINEER
6/28/16
P.E. SEAL/SIGNATURE/DATE

FLORIDA BUILDING CODE (HIGH VELOCITY HURRICANE ZONE)

© 2015 TILTECO INC.

TILTECO INC.
TILLIT TESTING & ENGINEERING COMPANY
6355 N.W. 36th. St., Ste.305, VIRGINIA GARDENS, Fl 33166
Phone : (305)871-1530 . Fax : (305)871-1531
e-mail: tilteco@aol.com
EB-0006719
WALTER A. TILLIT Jr., P.E.
FLORIDA Lic. 44167

DOUBLE & SINGLE IN-SWING WOOD ENTRANCE DOORS

Craftsmen In Wood, Mfg.
5441 West Hadley St., Phoenix, AZ 85043
Phone: (602) 296-1050 Fax: (602) 296-1052

REV. NO	DESCRIPTION	DATE	REV. No	DESCRIPTION	DATE
1	OLD 14-057	06/17/15	3		
2	IN-SWING	06/28/16	4		

M.L. DRAWN BY
06/17/15 DATE
15-143 DRAWING No
SHEET 10 OF 15

BIN OF MATERIALS

WOOD DOORS W/ FRAME HEIGHT UP TO 122-3/4"

ITEM #	QTY	PART DESCRIPTION	SIZE	MATERIAL REMARKS
1	1	FRAME HEAD	1-1/4" x 5-1/2"	DOUG FIR(.51), ALD(.41), ENG. MAH(.45), CHERRY(.50), MESQ(.65), OAK (.61),TEAK (.55), WALNUT (.55), CYPRESS (.46), SPANISH CEDAR (.41)
2	1	FRAME SILL	1-3/16" x 2"	OAK (.61)
3	2	FRAME JAMB	1-1/4" x 5-1/2"	DOUG FIR(.51), ALD(.41), ENG. MAH(.45), CHERRY(.50), MESQ(.65), OAK (.61),TEAK (.55), WALNUT (.55), CYPRESS (.46), SPANISH CEDAR (.41)
4	1	FRAME HEAD STOP	3/4" x 2-5/8"	DOUG FIR(.51), ALD(.41), ENG. MAH(.45), CHERRY(.50), MESQ(.65), OAK (.61),TEAK (.55), WALNUT (.55), CYPRESS (.46), SPANISH CEDAR (.41)
6	2	FRAME JAMB STOP	3/4" x 2-5/8"	DOUG FIR(.51), ALD(.41), ENG. MAH(.45), CHERRY(.50), MESQ(.65), OAK (.61),TEAK (.55), WALNUT (.55), CYPRESS (.46), SPANISH CEDAR (.41)
7	2	DOOR TOP RAIL	2-1/4" x 6" (Min.)	DOUG FIR CORE(.51), EDGE STRIPS & VENEERS MADE OF: ALD(.41), ENG. MAH(.45), CHERRY(.50), MESQ(.65), OAK (.61),TEAK (.55), WALNUT (.55), CYPRESS (.46), SPANISH CEDAR (.41), DOUG FIR (.51)
8	1	DOOR BOTTOM RAIL	2-1/4" x 8" (Min.)	DOUG FIR CORE(.51), EDGE STRIPS & VENEERS MADE OF: ALD(.41), ENG. MAH(.45), CHERRY(.50), MESQ(.65), OAK (.61),TEAK (.55), WALNUT (.55), CYPRESS (.46), SPANISH CEDAR (.41), DOUG FIR (.51)
9	4	DOOR STILE	2-1/4" x 6" (Min.)	DOUG FIR CORE(.51), EDGE STRIPS & VENEERS MADE OF: ALD(.41), ENG. MAH(.45), CHERRY(.50), MESQ(.65), OAK (.61),TEAK (.55), WALNUT (.55), CYPRESS (.46), SPANISH CEDAR (.41), DOUG FIR (.51)
10	AS REQD	PLYWOOD CORE PANEL	3/8" OR 3/4" THICK	SUPER PLY
11	AS REQD	RAISED PANEL	5/8" MIN.	DOUG FIR(.51), ALD(.41), ENG. MAH(.45), CHERRY(.50), MESQ(.65), OAK (.61),TEAK (.55), WALNUT (.55), CYPRESS (.46), SPANISH CEDAR (.41)
12	AS REQD	PLANKS	3/8" THICK	DOUG FIR(.51), ALD(.41), ENG. MAH(.45), CHERRY(.50), MESQ(.65), OAK (.61),TEAK (.55), WALNUT (.55), CYPRESS (.46), SPANISH CEDAR (.41)
13	(SEE SCHEDULE ON SHEETS 2 THRU 7)	FRAME INSTALLATION SCREWS	1/4" TAPCON ITW/BUILDEX	@ SILL, HEAD & JAMB
15	1	ALUMINUM THRESHOLD	4-1/8" x 1-5/16"	SCHLEGEL #5000D, 6063-T6 ALLOY, t = 0.062"
17	AS REQD	WEATHERSTRIP	.665 x .850	PVC (PELLA 09L60093)
18	10	HINGES	5 x 5 x 12 GAGE	HAGER BB-1279 OR STANLEY FBB179 (FULL ARCH 8EA. HINGES)
19	1	T-ASTRAGAL	1-7/8" x 3-3/8"	DOUG FIR(.51), ALD(.41), ENG. MAH(.45), CHERRY(.50), MESQ(.65), OAK (.61),TEAK (.55), WALNUT (.55), CYPRESS (.46), SPANISH CEDAR (.41)
20A	AS REQD	GLASS STOP / MOULDING (OPTION #1)	1-1/4" x 1-3/4" MIN.	DOUG FIR(.51), ALD(.41), ENG. MAH(.45), CHERRY(.50), MESQ(.65), OAK (.61),TEAK (.55), WALNUT (.55), CYPRESS (.46), SPANISH CEDAR (.41)
20B	AS REQD	GLASS STOP / MOULDING (OPTION #2)	9/16" x 3/4" MIN.	DOUG FIR(.51), ALD(.41), ENG. MAH(.45), CHERRY(.50), MESQ(.65), OAK (.61),TEAK (.55), WALNUT (.55), CYPRESS (.46), SPANISH CEDAR (.41)
20C	AS REQD	GLASS STOP / MOULDING (OPTION #3)	1-5/16" x 2-1/8" MIN.	DOUG FIR(.51), ALD(.41), ENG. MAH(.45), CHERRY(.50), MESQ(.65), OAK (.61),TEAK (.55), WALNUT (.55), CYPRESS (.46), SPANISH CEDAR (.41)
20D	AS REQD	GLASS STOP / MOULDING (OPTION #4)	3/4" x 1-1/8" MIN.	DOUG FIR(.51), ALD(.41), ENG. MAH(.45), CHERRY(.50), MESQ(.65), OAK (.61),TEAK (.55), WALNUT (.55), CYPRESS (.46), SPANISH CEDAR (.41)
21	10" O.C.	STEEL NAILS	16ga. x 1-1/2" T-NAIL	CRAFTSMEN IN WOOD
22	1	DEADBOLT	1-5/8" DIA. BORE	VARIES
23	4	SURFACE BOLT	15/16" x 12"	ROCKY MOUNTAIN HARDWARE. LOCATED ONE AT TOP & BOTTOM OF EACH PANEL LOCK STILE. SEE SHEET 14
24	2	DOOR LOCK (INTERMEDIATE) RAIL	2-1/4" x6-3/4" (Min.)	DOUG FIR CORE(.51), EDGE STRIPS & VENEERS MADE OF: ALD(.41), ENG. MAH(.45), CHERRY(.50), MESQ(.65), OAK (.61),TEAK (.55), WALNUT (.55), CYPRESS (.46), SPANISH CEDAR (.41), DOUG FIR (.51)
25	1	WEATHERSTRIP T-AST	3/4" x 7/8"	PVC PELLA 09ZR0094
26	1	WEATHERSTRIP T-AST	1/8" x 7/16"	GV 22-B MT
27	2	IMPACT RESISTANT GLASS	9/16" x VARIES	LAMINATED GLASS, 1/4" TEMP + .090" INTERLAYER SAFLEX PVB BY EASTMAN CHEMICAL COMPANY (MA) + 1/4" ANNEALED - ARCH ALUMINUM/SAFLEX
28	AS REQD	GLAZING SEALANT		POLOYSIL #PST-10 BK.
29	1	T-ASTRAGAL	1-1/8" x 1-7/8"	DOUG FIR(.51), ALD(.41), ENG. MAH(.45), CHERRY(.50), MESQ(.65), OAK (.61),TEAK (.55), WALNUT (.55), CYPRESS (.46), SPANISH CEDAR (.41)
30	1	STEEL PLATE @ FRAME HEAD	1/8" x 4" x 14" & 17" (SEE REMARKS)	Craftsmen In Wood, #4141 hot rolled steel plate w/rust-oleum stops (rust hammered metal finish)
30A	1	STEEL PLATE @ FRAME HEAD	1/8" x 4" x 7 1/2" or 9" (SEE REMARKS)	Craftsmen In Wood, #4141 hot rolled steel plate w/rust-oleum stops (rust hammered metal finish)
31	8" O.C.	TRIM SCREW	#6 x 1 5/8"	STEEL
33	8	OVAL HEAD WOOD SCREW	#8 x 1-1/4"	BRASS WOOD SCREW
36	4	SURFACE BOLT STRIKE	3/16" x 3" x 3"	CRAFTSMEN IN WOOD
37	1	STEEL PLATE @ FRAME SILL	1/8" x 1 1/2" x 14" & 17" (SEE REMARKS)	Craftsmen In Wood, #4141 hot rolled steel plate w/rust-oleum stops (rust hammered metal finish)
37A	1	STEEL PLATE @ FRAME SILL	1/8" x 1 1/2" x 7 1/2" or 9" (SEE REMARKS)	Craftsmen In Wood, #4141 hot rolled steel plate w/rust-oleum stops (rust hammered metal finish)
38	8	SURFACE BOLT STRIKE SCREWS	10/32 x 1-1/4"	Craftsmen In Wood, Socket Head Screw Grade 8
39	12	STEEL PLATE SCREWS	12GA x 3/4"	Craftsmen In Wood, F.H. Stainless Steel Wood Screw
40	8	HINGE SCREWS	#12 x 1-1/4"	Craftsmen In Wood, F.H. Stainless Steel Wood Screw
41	AS REQD	SILICONE		DOW 995

Approved as complying with the Florida Building Code
Date 4/21/16
NOA# 14-0731.11
Miami Dade Product Control
By Ishay Idlewyne

WALTER A. TILLIT JR. LICENSE No. 44167 STATE OF FLORIDA PROFESSIONAL ENGINEER

P.E. SEAL, SIGNATURE/DATE

© 2015 TILTECO INC.

TILTECO INC.
TILLIT TESTING & ENGINEERING COMPANY
6355 N.W. 36th. St., Ste.305, VIRGINIA GARDENS, Fl 33166
Phone : (305)871-1530 . Fax : (305)871-1531
e-mail: tilteco@aol.com
EB-0006719
WALTER A. TILLIT Jr., P.E.
FLORIDA Lic. 44167

FLORIDA BUILDING CODE (HIGH VELOCITY HURRICANE ZONE)

DOUBLE & SINGLE IN-SWING WOOD ENTRANCE DOORS

Craftsmen In Wood, Mfg.
5441 West Hadley St., Phoenix, AZ 85043
Phone: (602) 296-1050 Fax: (602) 296-1052

REV. NO	DESCRIPTION	DATE	REV. No	DESCRIPTION	DATE
1	OLD 14-057	06/17/15	3		
2	IN-SWING	06/26/15	4		

M.L.
DRAWN BY

06/17/15
DATE

15-143
DRAWING No

SHEET 11 OF 15

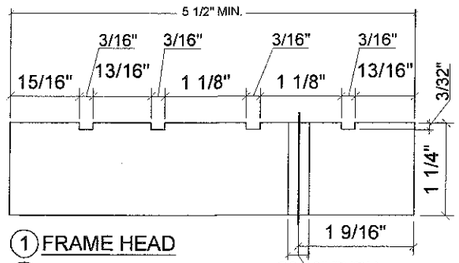

(1) FRAME HEAD
(3) FRAME JAMB
SCALE: 1/2"=1"

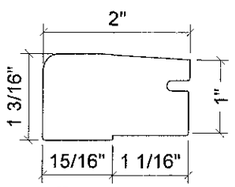

(2) SILL
SCALE: 1/2"=1"

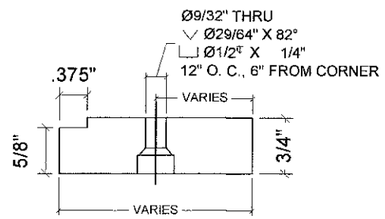

(4) FRAME HEAD STOP
(6) FRAME JAMB STOP
SCALE: 1/2"=1"

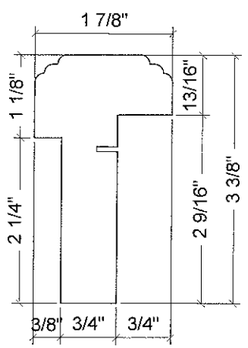

(19) T-ASTRAGAL

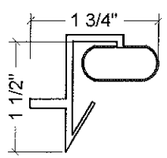

(25) WEATHERSTRIP T-AST
SCALE: 1/2"=1"

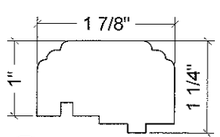

(29) T-ASTRAGAL

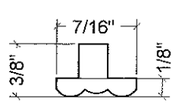

(26) WEATHERSTRIP T-AST
SCALE: 1/2"=1"

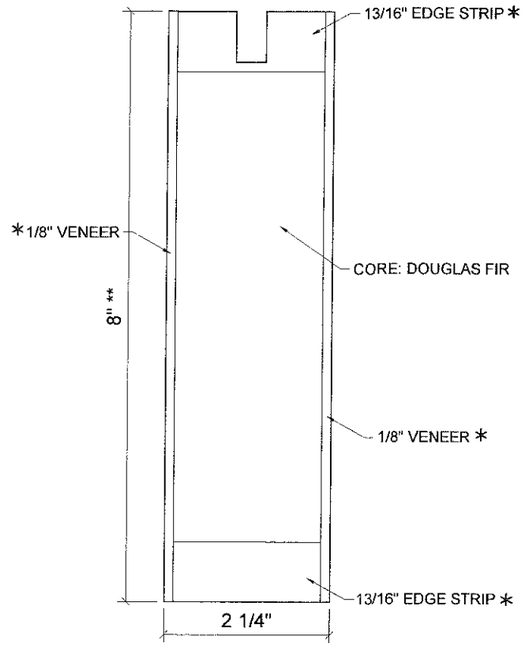

(8) DOOR BOTTOM RAIL

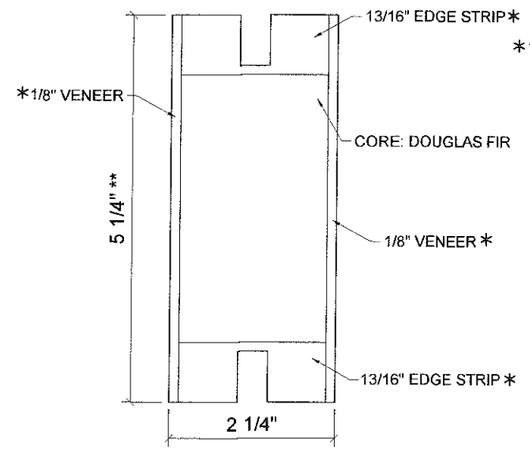

(24) DOOR LOCK (INTERMEDIATE) RAIL

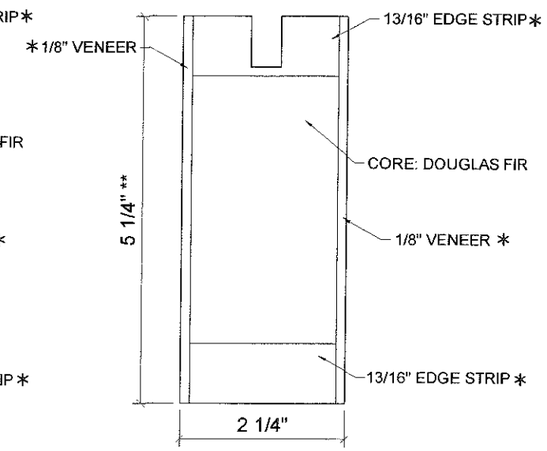

(7) DOOR TOP RAIL
(9) DOOR STILE

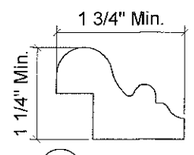

(20A) OPTION #1

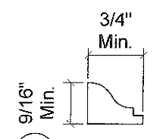

(20B) OPTION #2

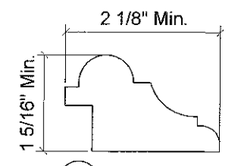

(20C) OPTION #3

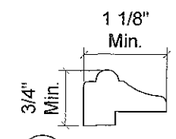

(20D) OPTION #4

MOULDING OPTIONS

Approved complying with the Florida Building Code
Date 4/21/16
NOA# 14-0731.11
Miami Dade Product Control
By Chang L. Chang

GLASS STOP MOULDING
@ GLAZING OPTIONS

* NOTE: VENEER'S & EDGESTRIP'S WOOD TYPE AS PER BILL OF MATERIALS ON SHEET 11

** NOTE: MINIMUM PROFILE DIMENSIONS ARE SHOWN. LARGER DIMENSIONS ARE ACCEPTABLE.

WALTER A. TILLIT JR. LICENSE No. 44167 STATE OF FLORIDA PROFESSIONAL ENGINEER

P.E. SEAL/SIGNATURE/DATE

© 2015 TILTECO INC.

TILTECO INC.
TILLIT TESTING & ENGINEERING COMPANY
6355 N.W. 36th. St., Ste.305, VIRGINIA GARDENS, Fl 33166
Phone : (305)871-1530 . Fax : (305)871-1531
e-mail: tilteco@aol.com
EB-0006719
WALTER A. TILLIT Jr., P.E.
FLORIDA Lic. 44167

FLORIDA BUILDING CODE (HIGH VELOCITY HURRICANE ZONE)

DOUBLE & SINGLE IN-SWING WOOD ENTRANCE DOORS

Craftsmen In Wood, Mfg.
5441 West Hadley St., Phoenix, AZ 85043
Phone: (602) 296-1050 Fax: (602) 296-1052

REV. NO	DESCRIPTION	DATE	REV. No	DESCRIPTION	DATE
1	OLD 14-057	06/17/15	3		
2	IN-SWING	06/22/16	4		

M.L.
DRAWN BY

06/17/15
DATE

15-143
DRAWING No

SHEET 12 OF 15

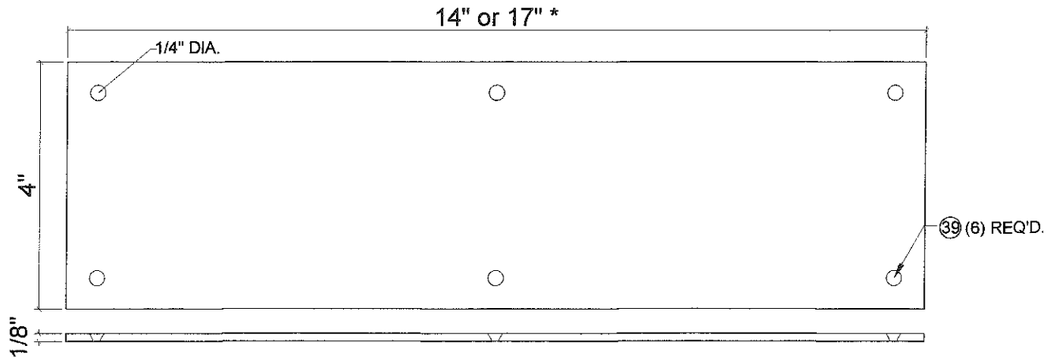

30 1/8" STEEL PLATE @ FRAME HEAD @DOBLE DOOR
SCALE: 1/2"=1"

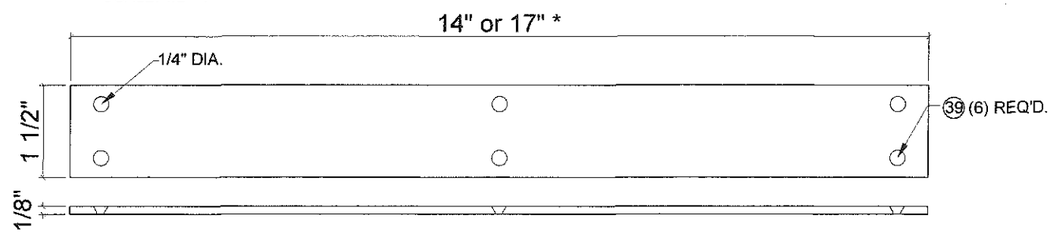

37 1/8" STEEL PLATE @ FRAME SILL@DOBLE DOOR
SCALE: 1/2"=1"

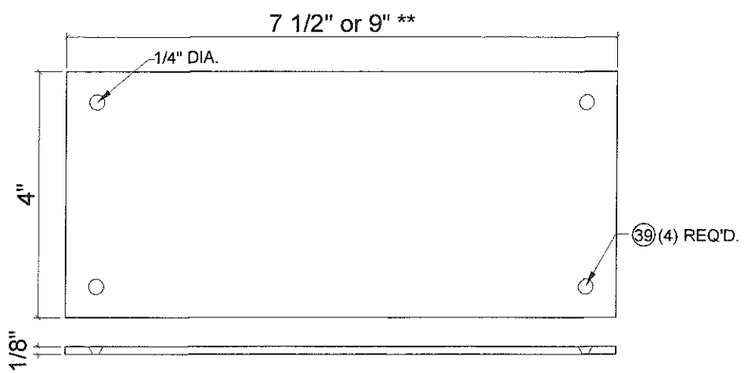

30A 1/8" STEEL PLATE@ FRAME HEAD@SINGLE DOOR
SCALE: 1/2"=1"

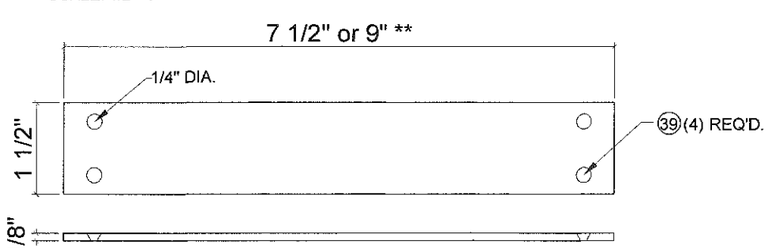

37A 1/8" STEEL PLATE @ FRAME SILL@SINGLE DOOR
SCALE: 1/2"=1"

*17" REQ'D FOR REGULAR DOUBLE DOOR.
*14" REQ'D FOR EYEBROW OR ARCH DOUBLE DOORS

**9" REQ'D FOR REGULAR SINGLE DOOR.
** 7 1/2" REQ'D FOR EYEBROW OR ARCH SINGLE DOORS

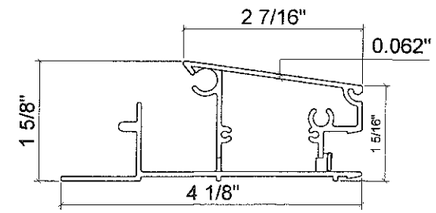

15 ALUMINUM THRESHOLD

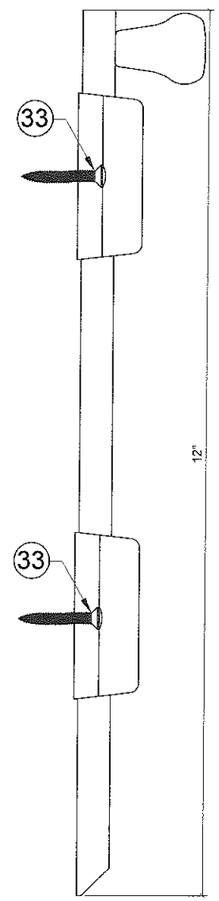

23 SURFACE BOLT

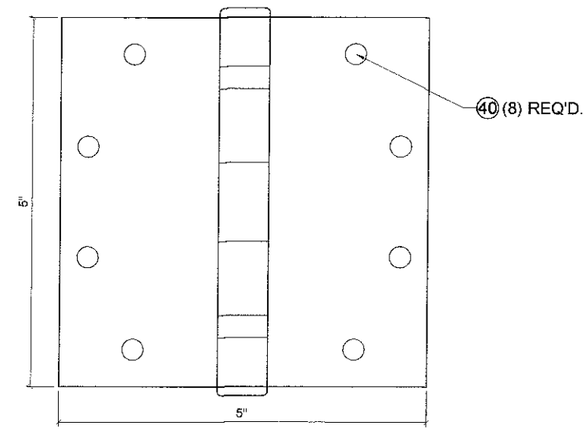

18 HINGE

NOTE: Attach hinge to door & jamb with (8) #12 x 1-1/4" wood screws
SCALE: 1/2"=1"

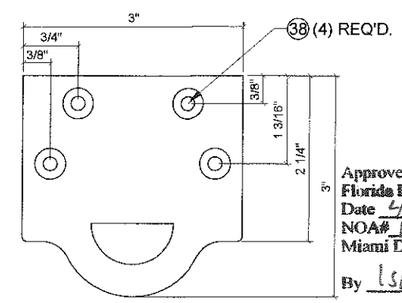

36 SURFACE BOLT STRIKE

Approved as complying with the Florida Building Code
Date 4/21/16
NOA# 14-0731.11
Miami Dade Product Control
By Ishaq I. Chand

WALTER A. TILLIT JR. LICENSE No. 44167 STATE OF FLORIDA PROFESSIONAL ENGINEER
6/21/16
P.E. SEAL/SIGNATURE/DATE

FLORIDA BUILDING CODE (HIGH VELOCITY HURRICANE ZONE)

© 2015 TILTECO INC.

TILTECO INC.
TILLIT TESTING & ENGINEERING COMPANY
6355 N.W. 36th. St., Ste.305, VIRGINIA GARDENS, Fl 33166
Phone : (305)871-1530 . Fax : (305)871-1531
e-mail: tilteco@aol.com
EB-0006719
WALTER A. TILLIT Jr., P.E.
FLORIDA Lic. 44167

DOUBLE & SINGLE IN-SWING WOOD ENTRANCE DOORS

Craftsmen In Wood, Mfg.
5441 West Hadley St., Phoenix, AZ 85043
Phone: (602) 296-1050 Fax: (602) 296-1052

REV. NO	DESCRIPTION	DATE	REV. No	DESCRIPTION	DATE
1	OLD 14-057	06/17/15	3		
2	IN-SWING	06/28/16	4		

M.L.
DRAWN BY
06/17/15
DATE
15-143
DRAWING No
SHEET 13 OF 15

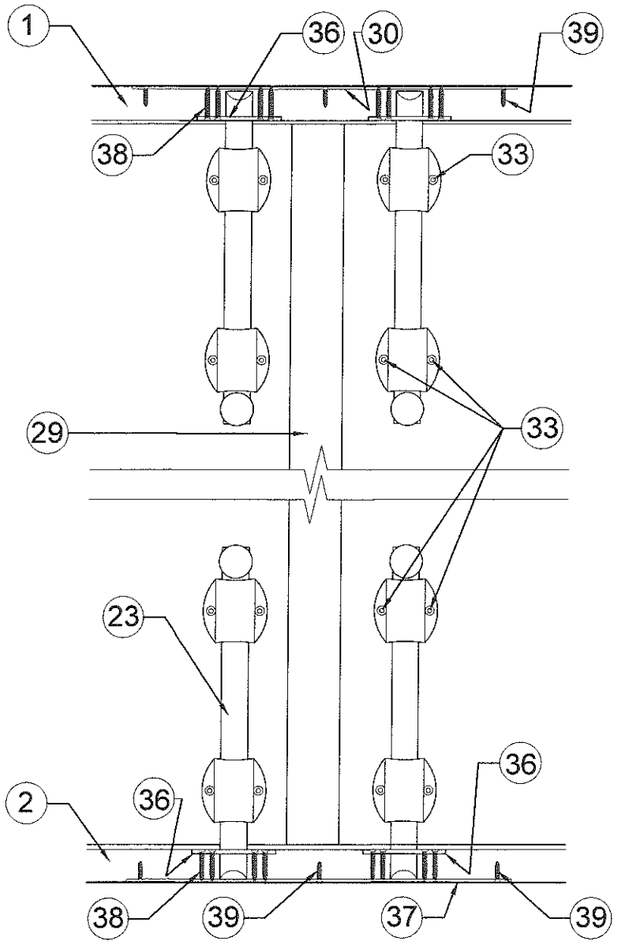

FRAME DETAIL @ STEEL PLATES
& SURFACE BOLT STRIKES (ELEVATION)

DOUBLE DOORS

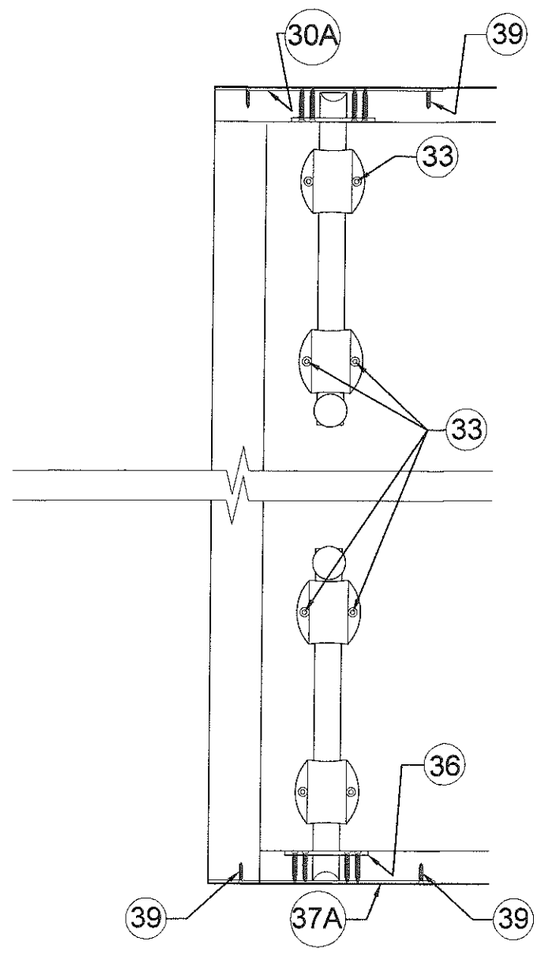

FRAME DETAIL @ STEEL PLATES
& SURFACE BOLT STRIKES (ELEVATION)

SINGLE DOORS

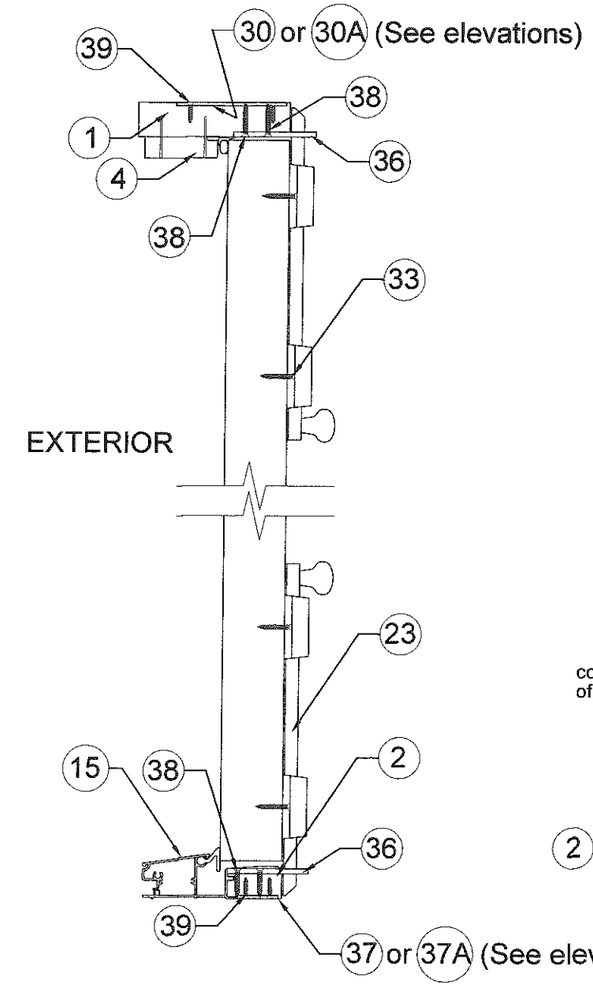

FRAME DETAIL @ STEEL PLATES
& SURFACE BOLT STRIKES (SIDE VIEW)

SINGLE & DOUBLE DOORS

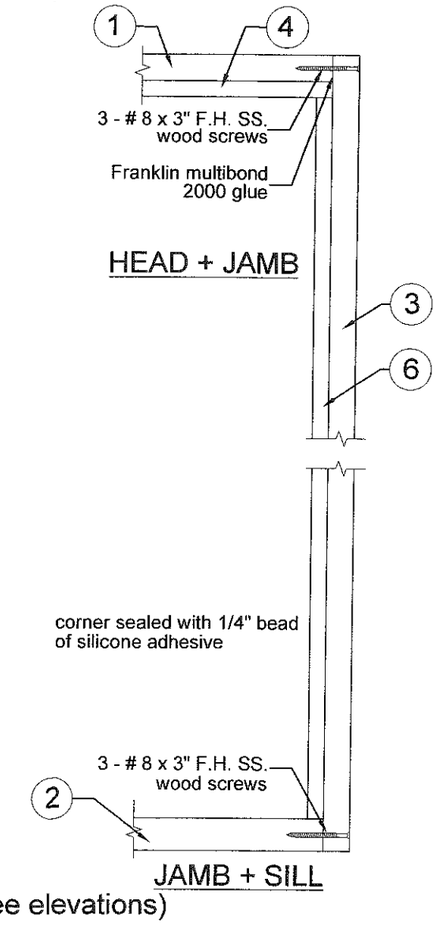

FRAME CORNER
DETAIL(ELEVATION)

Approved as complying with the
Florida Building Code
Date 4/21/16
NOA# 14-0731.11
Miami Dade Product Control
By [illegible]

FRAME DETAIL @ STEEL PLATES
& SURFACE BOLT W/ STRIKES

WALTER A. TILLIT JR. LICENSE No. 44167 STATE OF FLORIDA PROFESSIONAL ENGINEER

P.E. SEAL/SIGNATURE/DATE

FLORIDA BUILDING CODE (HIGH VELOCITY HURRICANE ZONE)

© 2015 TILTECO INC.

TILTECO INC.
TILLIT TESTING & ENGINEERING COMPANY
6355 N.W. 36th. St., Ste.305, VIRGINIA GARDENS, Fl 33166
Phone : (305)871-1530 . Fax : (305)871-1531
e-mail: tilteco@aol.com
EB-0006719
WALTER A. TILLIT Jr., P.E.
FLORIDA Lic. 44167

DOUBLE & SINGLE IN-SWING WOOD
ENTRANCE DOORS

Craftsmen In Wood, Mfg.
5441 West Hadley St., Phoenix, AZ 85043
Phone: (602) 296-1050 Fax: (602) 296-1052

REV. NO	DESCRIPTION	DATE	REV. No	DESCRIPTION	DATE
1	OLD 14-057	06/17/15	3		
2	IN-SWING	06/22/16	4		

M.L.
DRAWN BY

06/17/15
DATE

15-143
DRAWING No

SHEET 14 OF 15

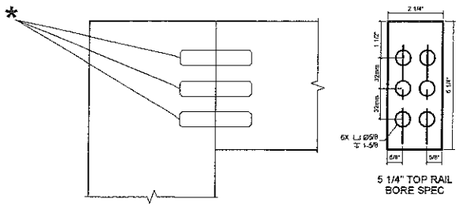

TOP CORNER DETAIL - ELEVATION
@ 5 1/4" RAIL

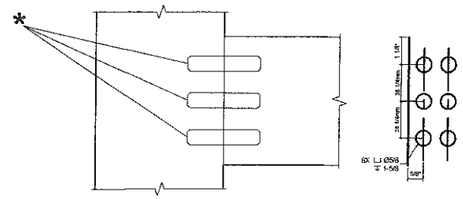

@ 5 1/4" INTERMEDIATE RAIL

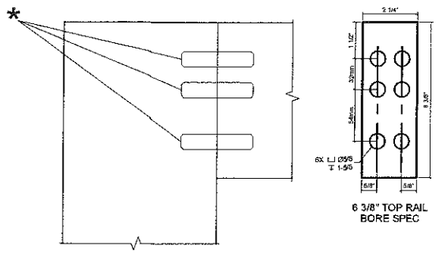

TOP CORNER DETAIL - ELEVATION
@ 6 3/8" RAIL

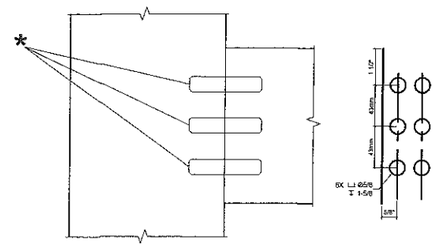

@ 6 3/8" INTERMEDIATE RAIL

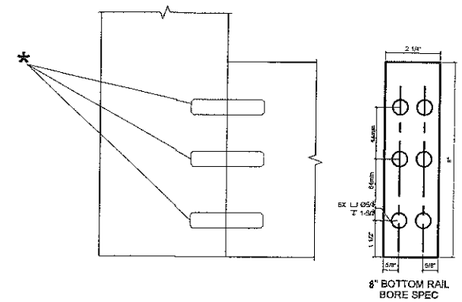

BOTTOM CORNER DETAIL - ELEVATION
@ 8" BOTTOM RAIL

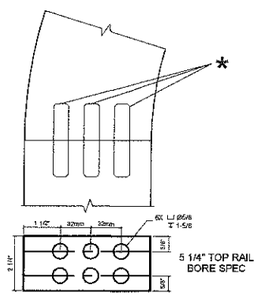

OUTSIDE CORNER DETAIL - ELEVATION
FULL ARCH @ 5 1/4" STILE/RAIL

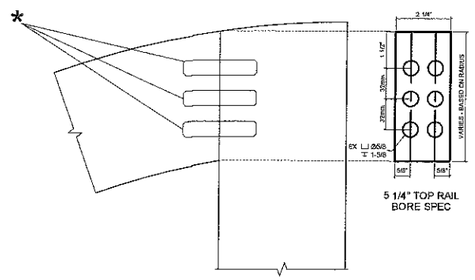

TOP CORNER DETAIL - ELEVATION
FULL ARCH @ 5 1/4" STILE/RAIL

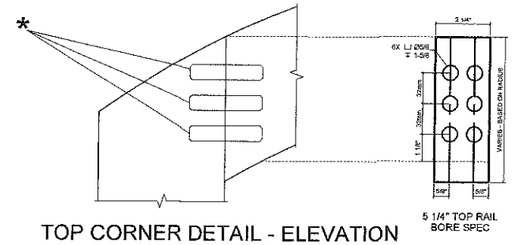

TOP CORNER DETAIL - ELEVATION
EYEBROW ARCH @ 5 1/4" STILE/RAIL

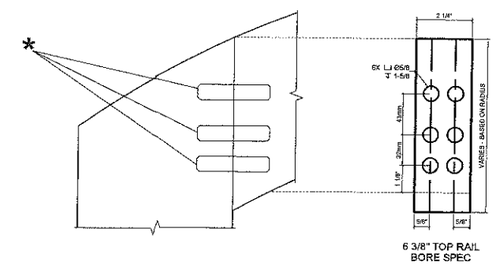

TOP CORNER DETAIL - ELEVATION
EYEBROW ARCH @ 6 3/8" STILE/RAIL

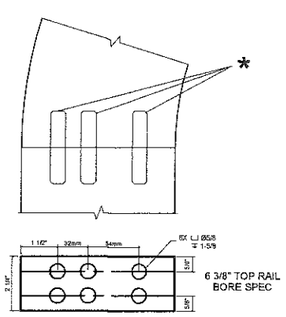

OUTSIDE CORNER DETAIL - ELEVATION
FULL ARCH @ 6 3/8" STILE/RAIL

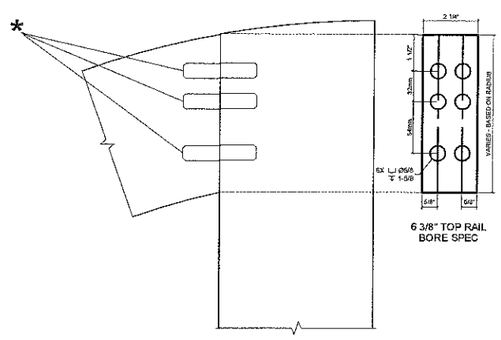

TOP CORNER DETAIL - ELEVATION
FULL ARCH @ 6 3/8" STILE/RAIL

* 5/8Ø x 3"
WOOD DOWELS

Approved as complying with the
Florida Building Code
Date APRIL 21, 2016
NOA# 14-0731.11
Miami Dade Product Control
By Ishwar L. Chandra

WALTER A. TILLIT JR.
LICENSE
No. 44167
STATE OF FLORIDA
PROFESSIONAL ENGINEER

SEAL/SIGNATURE/DATE

© 2015 TILTECO INC.

TILTECO INC.
TILLIT TESTING & ENGINEERING COMPANY
8355 N.W. 36th. St., Ste.305, VIRGINIA GARDENS, Fl 33166
Phone : (305)871-1530 . Fax : (305)871-1531
e-mail: tilteco@aol.com
EB-0006719
WALTER A. TILLIT Jr., P.E.
FLORIDA Lic. 44167

FLORIDA BUILDING CODE (HIGH VELOCITY HURRICANE ZONE)

DOUBLE & SINGLE IN-SWING WOOD
ENTRANCE DOORS

Craftsmen In Wood, Mfg.
5441 West Hadley St., Phoenix, AZ 85043
Phone: (602) 296-1050 Fax: (602) 296-1052

REV. NO	DESCRIPTION	DATE	REV. No	DESCRIPTION	DATE
1	OLD 14-057	06/17/15	3		
2	IN-SWING	06/28/16	4		

M.L.
DRAWN BY

06/17/15
DATE

15-143
DRAWING No

SHEET 15 OF 15