MIAMI-DADE COUNTY
PRODUCT CONTROL SECTION
11805 SW 26 Street, Room 208
Miami, Florida 33175-2474
T (786) 315-2590 F (786) 315-2599
www.miamidade.gov/economy

DEPARTMENT OF REGULATORY AND ECONOMIC RESOURCES (RER)
BOARD AND CODE ADMINISTRATION DIVISION

NOTICE OF ACCEPTANCE (NOA)

Global Performance Windows, Inc. dba Epsylon, USA
2115 S. W. 2nd Street
Pompano, FL 33069

SCOPE:

This NOA is being issued under the applicable rules and regulations governing the use of construction materials. The documentation submitted has been reviewed and accepted by Miami-Dade County RER -Product Control Section to be used in Miami Dade County and other areas where allowed by the Authority Having Jurisdiction (AHJ).
This NOA shall not be valid after the expiration date stated below. The Miami-Dade County Product Control Section (In Miami Dade County) and/or the AHJ (in areas other than Miami Dade County) reserve the right to have this product or material tested for quality assurance purposes. If this product or material fails to perform in the accepted manner, the manufacturer will incur the expense of such testing and the AHJ may immediately revoke, modify, or suspend the use of such product or material within their jurisdiction. RER reserves the right to revoke this acceptance, if it is determined by Miami-Dade County Product Control Section that this product or material fails to meet the requirements of the applicable building code.
This product is approved as described herein, and has been designed to comply with the Florida Building Code, including the High Velocity Hurricane Zone.

DESCRIPTION: Series "EUSA SD-20" Aluminum Sliding Glass Door-L.M.I.

APPROVAL DOCUMENT: Drawing No. **EUSA MDC-005**, titled "Series EUSA SD-20 Aluminum Sliding Glass Door (L.M.I.)", sheets 1 thru 19 of 19, dated 07/03/14 and last revised on 04/09/15, prepared by Paramount Consulting & Engineering, signed and sealed by Cesar I. Soto, P.E., bearing the Miami-Dade County Product Control Approval stamp with the Notice of Acceptance number and approval date by the Miami-Dade County Product Control Section.

MISSILE IMPACT RATING: Large Missile Impact Resistant

Limitations:

1. See Sheets 02 thru 04 (glass types) & sheet 11 &12 (shim gaps) for Allowable Design Pressure for **System 1 (HD)** and sheets 05 thru 07 (glass types) & sheet 13 (shim gaps) for Allowable Design Pressure for **System 2**. Lower capacity from head, sill or jamb (glass types/shim gaps) shall control for the entire assembly.
2. Window Wall System is **not** a part of this approval, when SGD is mulled to such system, Authority Having Jurisdiction (AHJ) to review & approve such system for structural adequacy, limitations and attachments.
3. See glazing **options** in sheet 04 for **System 1** & sheet 07 for **System 2**. See glazing detail **GT-C & GT-D,** sheet 08.
4. See sheet 08 for applicable head/sill anchors and sheet 09 for applicable jamb anchors.

LABELING: Each unit shall bear a permanent label with the manufacturer's name or logo, Quebec, Canada and series and following statement: "Miami-Dade County Product Control Approved", noted herein.

RENEWAL of this NOA shall be considered after a renewal application has been filed and there has been no change in the applicable building code negatively affecting the performance of this product.

TERMINATION of this NOA will occur after the expiration date or if there has been a revision or change in the materials, use, and/or manufacture of the product or process. Misuse of this NOA as an endorsement of any product, for sales, advertising or any other purposes shall automatically terminate this NOA. Failure to comply with any section of this NOA shall be cause for termination and removal of NOA.

ADVERTISEMENT: The NOA number preceded by the words Miami-Dade County, Florida, and followed by the expiration date may be displayed in advertising literature. If any portion of the NOA is displayed, then it shall be done in its entirety.

INSPECTION: A copy of this entire NOA shall be provided to the user by the manufacturer or its distributors and shall be available for inspection at the job site at the request of the Building Official.
This NOA consists of this page 1 and evidence pages E-1 & E-2, as well as approval document mentioned above.
The submitted documentation was reviewed by **Ishaq I. Chanda, P.E.**

MIAMI-DADE COUNTY APPROVED

4/21/15

NOTICE OF ACCEPTANCE: EVIDENCE SUBMITTED

A. DRAWINGS

1. Manufacturer's die drawings and sections
2. Drawing No. **EUSA MDC-005**, titled "Series EUSA SD-20 Aluminum Sliding Glass Door (L.M.I.)", sheets 1 through 19 of 19, dated 07/03/14 and last revised on 04/09/15, prepared by Paramount Consulting & Engineering, signed and sealed by Cesar I. Soto, P.E.

B. TESTS

1. Test reports on: 1) Air Infiltration Test, per FBC, TAS 202-94
   2) Uniform Static Air Pressure Test, Loading per FBC TAS 202-94
   3) Water Resistance Test, per FBC, TAS 202-94
   4) Large Missile Impact Test per FBC, TAS 201-94
   5) Cyclic Wind Pressure Loading per FBC, TAS 203-94
   6) Forced Entry Test, per FBC 2411 3.2.1, TAS 202-94

along with marked-up drawings and installation diagram of an aluminum SD-20sliding glass door, prepared by Fenestration Testing Lab, Inc., Test Report No. **FTL-7657**, dated 03/05/2014 revised on 01/06/15 and 03/11/15, signed & sealed by Adalmis Ortega, P. E.

along with marked-up drawings and installation diagram of an aluminum SD-20sliding glass door, prepared by Fenestration Testing Lab, Inc., Test Report No. **FTL-7349**, dated 07/05/2013, signed & sealed by Jorge A. Naya Jr., P.E. and Adalmis Ortega, P. E.

along with marked-up drawings and installation diagram of an aluminum SD-10 sliding glass door, prepared by Fenestration Testing Lab, Inc., Test Report No. **FTL-7157**, dated 03/05/2013 and revised on 08/08/14, signed & sealed by Adalmis Ortega, P. E.

Note: The above test reports have addendum letters, issued by Fenestration Testing lab.

C. CALCULATIONS

1. Anchor verification calculations and structural analysis, complying with FBC-2010, prepared by Paramount Consulting & Engineering dated 03/24/14, 07/21/14, 10/27/14 and last revised on 12/03/14, signed and sealed by Cesar I. Soto, P.E.
2. Glazing complies w/ ASTME-1300-02 & -04

D. QUALITY ASSURANCE

1. Miami Dade Department of Regulatory and Economic Resources (RER).

E. MATERIAL CERTIFICATIONS

1. Notice of Acceptance No. **11-0624.02** issued to E.I. DuPont DeNemours & Co., Inc. for their "**DuPont Sentry Glass ® interlayer**", expiring on 01/14/17.
2. Notice of Acceptance No. **12-1231.08** issued Eastman Chemical Company (MA) former Solutia Inc. for "**Saflex-CP-Saflex and Saflex Hp Composite glass interlayer w/ PET core**", expiring on 12/11/18.

F. STATEMENTS

1. Statement letter of conformance and letter of no financial interest both dated 08/01/14, prepared by Paramount Consulting & Engineering, signed and sealed by Cesar I. Soto, P.E.
2. Lab compliance as part of the above referenced test report.

Ishaq I. Chanda, P.E.
Product Control Examiner
NOA No. 14-0806.02
Expiration Date: April 30, 2020
Approval Date: April 30, 2015

NOTICE OF ACCEPTANCE: EVIDENCE SUBMITTED

F. STATEMENTS (continue)

3. Distribution agreement Epsylon Concept, Inc., Quebec, Canada and Globe Performance Inc., dba Epsylon, USA, Pompano Beach Florida, dated 10/11/14, signed by Jean LeFrancois and Gabreil Matteau, respectively on behalf of the companies.
4. Statement letter dated 12/08/14, issued by Epsylon Aluminum & Engenierie, Canada that test reports **FTL-7157, 7657 & 7349** are property of Epsylon Concept, Inc., signed by Jean Lefrancois.

G. OTHER

1. Test proposal #**12-1861** & #**13-0367**, approved by RER.
2. Reference NOA # 14-0331.03-SMI
3. Globe Performance Window Inc., active status listing with Florida Depart of State, Div. of Corporation.
4. Epsylon USA, Fictitious active status listing of Globe Performance Windows, Inc., with Florida Depart of State, Div. of Corporation.
5. Addendum letter dated March 12, 2015, issued by Fenestration Testing lab, clarifying the glazing method.
6. Glazing method, shop Inspection Report, prepared by Paramount Consulting & Engineering dated 04/09/15, signed and sealed by Cesar I. Soto, P.E.

Ishaq I. Chanda

Ishaq I. Chanda, P.E.
Product Control Examiner
NOA No. 14-0806.02
Expiration Date: April 30, 2020
Approval Date: April 30, 2015

GLOBAL PERFORMANCE WINDOWS, INC.

SERIES EUSA SD-20 ALUMINUM SLIDING GLASS DOOR LARGE MISSILE IMPACT

APPROVAL DRAWINGS

APPROVAL USE INSTRUCTIONS

1. DETERMINE APPLICABLE PROJECT WINDLOADS PER FBC APPROVED METHODS
2. VERIFY GLASS CAPACITY BASED ON DIMENSIONS AND NOT TO EXCEED PRESSURES AS INDICATED ON SHEETS 02 TO 07.
3. SELECT SYSTEM 1 OR SYSTEM 2 PER APPLICABLE SIZE AND DESIGN PRESSURE.
4. SELECT REQUIRED FASTENERS FOR SYSTEM 1 OR SYSTEM 2, BASED ON SUBSTRATE AND SHIM SPACE FROM SHEETS 9 AND 10.
5. THE LOWEST PRESSURE FROM STEPS 2 THROUGH 4 ABOVE SHALL CONTROL THE ALLOWABLE PRESSURE FOR THE OPENING.
6. WHEN THIS DOOR IS CONNECTED TO A WINDOW SYSTEM (UNDER SEPERATE APPROVAL), THE MINIMUM ALLOWABLE PRESSURE BETWEEN THIS NOA AND SEPARATE WINDOW NOA SHALL CONTROL THE ALLOWABLE PRESSURE FOR THE ENTIRE OPENING. THIS CONDITION TO BE REVIEWED BY THE AUTHORITY HAVING JURISDICTION (AHJ)

GENERAL NOTES

1. THIS PRODUCT HAS BEEN DESIGNED AND TESTED IN ACCORDANCE WITH THE FLORIDA BUILDING CODE 2010 EDITION, INCLUDING THE REQUIREMENTS FOR HIGH VELOCITY HURRICANE ZONES (HVHZ).

2. THIS PRODUCT IS AN ALUMINUM SLIDING GLASS DOOR, LARGE MISSILE IMPACT RESISTANT, THAT CAN BE USED AT ELEVATIONS BELOW 30'-0" OF GRADE LEVEL WITHOUT HURRICANE PROTECTIVE SHUTTERS. SHUTTERS ARE NOT REQUIRED.

3. THIS APPROVAL APPLIES TO TWO SLIDING GLASS DOOR SYSTEMS. SYSTEM 1 AND SYSTEM 2 (REFER TO ELEVATIONS FOR SIZES AND DESIGN PRESSURES). EACH SYSTEM IS APPROVED WITH THE FOLLOWING CONFIGURATIONS:

3.1. 2 PANEL DOOR, XO OR OX

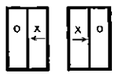

3.2. 3 PANELS DOOR, OXO RIGHT OR OXO LEFT

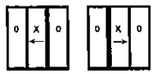

3.3. 4 PANEL DOOR, OXXO

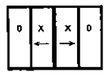

3.4. THIS SLIDING GLASS DOOR MAY BE USED IN CONJUNCTION WITH LARGE MISSILE IMPACT RESISTANT MULLIONS THAT MAY OR MAY NOT BE PART OF A SEPARATE WINDOW SYSTEM. THE TESTED MULLION MUST HAVE A VALID MIAMI-DADE OR FLORIDA STATE PRODUCT APPROVAL ALLOWING SEPARATE SYSTEMS TO BE CONNECTED TO IT. THE LOWER ALLOWABLE PRESSURE BETWEEN THE MULLION SYSTEM WITH SEPARATE APPROVAL AND THIS SLIDING GLASS DOOR SHALL APPLY TO THE ENTIRE SYSTEM. THE STRUCTURAL ADEQUACY OF THE INTERACTION AND ATTACHMENTS OF THE TWO MULLED SYSTEMS IS TO BE REVIEWED AND APPROVED BY THE AUTHORITY HAVING JURISDICTION (AHJ)..

4. DESIGN LOAD RATING FOR THIS PRODUCT TO BE AS PER SYSTEM 1 (SHEETS 2, 3 and 4) OR SYSTEM 2 (SHEETS 5, 6 and 7).

5. THE DESIGN LOADS OF THE LOCATION WHERE THE PRODUCT WILL BE USED MUST BE CERTIFIED BY A PROFESSIONAL ARCHITECT OR ENGINEER REGISTERED IN THE STATE OF FLORIDA FOR EACH SPECIFIC PROJECT.

6. ANCHORING OR LOADING CONDITIONS NOT SHOWN ON THE DETAILS HEREIN INCLUDED ARE NOT PART OF THIS APPROVAL. ANY DEVIATION, IN HVHZ, WILL REQUIRE A ONE-TIME PRODUCT APPROVAL FROM MIAMI-DADE COUNTY (PRODUCT CONTROL SECTION)

7. IT SHALL BE RESPONSIBILITY OF THE CONTRACTOR, ARCHITECT OR ENGINEER OF RECORD TO VERIFY:
7.1. THE STABILITY OF THE STRUCTURE WHERE THE PRODUCT IS TO BE INSTALLED TO ENSURE PROPER ANCHORAGE
7. 2. THE PROJECT DESIGN CRITERIA AND APPLICABLE CODES AND ORDINANCES
7. 3. THE ADEQUACY AND APPLICABILITY OF THIS APPROVAL.

Approved as complying with the Florida Building Code
Date APR 30, 2015
NOA 14-0806.02
Miami-Dade Product Control
By Ishaq I. Chanda

8. ANCHORS SHALL BE AS LISTED IN THIS DOCUMENT AND SPACED AS INDICATED ON SHEETS 02 AND 03 FOR SYSTEM 1 OR 05 AND 06 FOR SYSTEM 2. LISTED EMBEDMENT SHALL BE BEYOND EXTERIOR OR INTERIOR FINISH OF SUBSTRATES. A LOAD DURATION INCREASE HAS BEEN USED IN DESIGN OF ANCHORS INTO WOOD ONLY.

9. ALUMINUM: ALL ALUMINUM EXTRUSIONS SHALL BE 6063-T6 ALLOY MINIMUM EXCEPT WHERE OTHER WISE INDICATED. PLEASE REFER TO SHEET 17 FOR BILL OF MATERIALS.

10. GLASS: THIS PRODUCT IS APPROVED TO BE GLAZED WITH THE FOLLOWING GLASS COMPOSITIONS (SEE SYSTEMS 1 AND 2 DESIGN PRESSURE LIMITATIONS):

10.1. GT-C. 9/16 " THK. LAMINATED GLASS:
1/4 "THK. HEAT STRENGTHENED + .090" DUPONT SENTRYGLAS BY E.I. DUPONT DE NEMOURS & CO, INC. + 1/4" HEAT STRENGTHENED

10.2. GT-D. 9/16 " THK. LAMINATED GLASS:
1/4 " THK. HEAT STRENGTHENED + .077" SAFLEX CP- SAFLEX AND SAFLEX HP COMPOSITE GLASS INTERLAYERS WITH PET CORE BY EASTMAN CHEMICAL CO.(MA) + 1/4 " THK. HEAT STRENGTHENED

DRAWINGS INDEX

SHEET	TITLE	REV	DATE
01	COVER SHEET	3	03/17/2015
02	SYSTEM 1 GENERIC ELEVATION OXXO	3	03/17/2015
03	SYSTEM 1 GENERIC ELEVATION OX	3	03/17/2015
04	SYSTEM 1 APPROVED CONFIGURATIONS	3	03/17/2015
05	SYSTEM 2 GENERIC ELEVATION OXXO	3	03/17/2015
06	SYSTEM 2 GENERIC ELEVATION OX	3	03/17/2015
07	SYTEM 2 APPROVED CONFIGURATIONS	3	03/17/2015
08	GLAZING INSTRUCTIONS	3	03/17/2015
09	HEAD AND SILL ANCHORAGE SCHEDULE	3	03/17/2015
10	JAMB ANCHORAGE SCHEDULE	3	03/17/2015
11	SYSTEM 1. ANCHORS CAPACITY (GT-C)	2	12/10/2014
12	SYSTEM 1. ANCHORS CAPACITY (GT-D)	2	12/10/2014
13	SYSTEM 2. ANCHORS CAPACITY	2	12/10/2014
14	INSTALLATION DETAILS	2	12/10/2014
15	INSTALLATION DETAILS	3	03/17/2015
16	INSTALLATION DETAILS	3	03/17/2015
17	BILL OF MATERIALS	3	03/17/2015
18	ALUMINUM EXTRUSION DIMENSIONS	3	03/17/2015
19	ISOMETRIC VIEWS	2	12/10/2014

GLOBAL PERFORMANCE WINDOWS, INC.
DBA EPSYLON USA

1881 S.W. 3rd STREET
POMPANO BEACH, FL 33069
PH: 954.942.3322
FAX: 954.942.3215
www.epsylon.ca

PROJECT NAME
ALUMINUM SLIDING GLASS DOOR SERIES EUSA SD20. LARGE MISSILE IMPACT

SHEET TITLE
COVER SHEET

SCALE:

PREPARED BY: EPSYLON USA	DRAWN BY: LS
ISSUE DATE: 7/23/2014	ISSUE DATE: -

DRAWING REVISION LOG

No.	Date:	Revision:
01	10/10/14	PER REVIEWER COMMENTS
02	12/10/14	PER REVIEWER COMMENTS
03	03/17/15	PER REVIEWER COMMENTS

ENGINEER.

PARAMOUNT
CONSULTING & ENGINEERING
CA#29244
6157 NW 167th STREET SUITE F15
MIAMI, FL 33015
Ph: (305) 698-0550
F: (305) 698-0558
www.paramountce.com

SIGNED AND SEALED DRAWINGS CHECKED FOR STRUCTURAL COMPLIANCE ONLY BY:
PARAMOUNT CONSULTING AND ENGINEERING, LLC

CESAR A. SOTO LICENSE No. 0059682 STATE OF FLORIDA PROFESSIONAL ENGINEER

CESAR A. SOTO, P.E.
FL REG. # 59682

DWG No.
EUSA MDC-005
SHEET 01 of 19

SYSTEM 1

DOOR WITH HEAVY INTERLOCKS

MAXIMUM ALLOWABLE DESIGN PRESSURE	
W/ GT-C Pd= +120 PSF -130 PSF	W/ GT-D Pd= +90 PSF -100 PSF
GT-C 9/16" THK. LAMI GLASS 1/4" HS GLASS + .090 DUPONT SENTRYGLAS + 1/4" HS GLASS	GT-D 9/16" THK. LAMI GLASS 1/4" HS GLASS + .077 SAFLEX CP & SAFLEX HP W/PET CORE + 1/4" HS GLASS
REFER TO SHEET 11 FOR ANCHOR CAPACITY	REFER TO SHEET 12 FOR ANCHOR CAPACITY

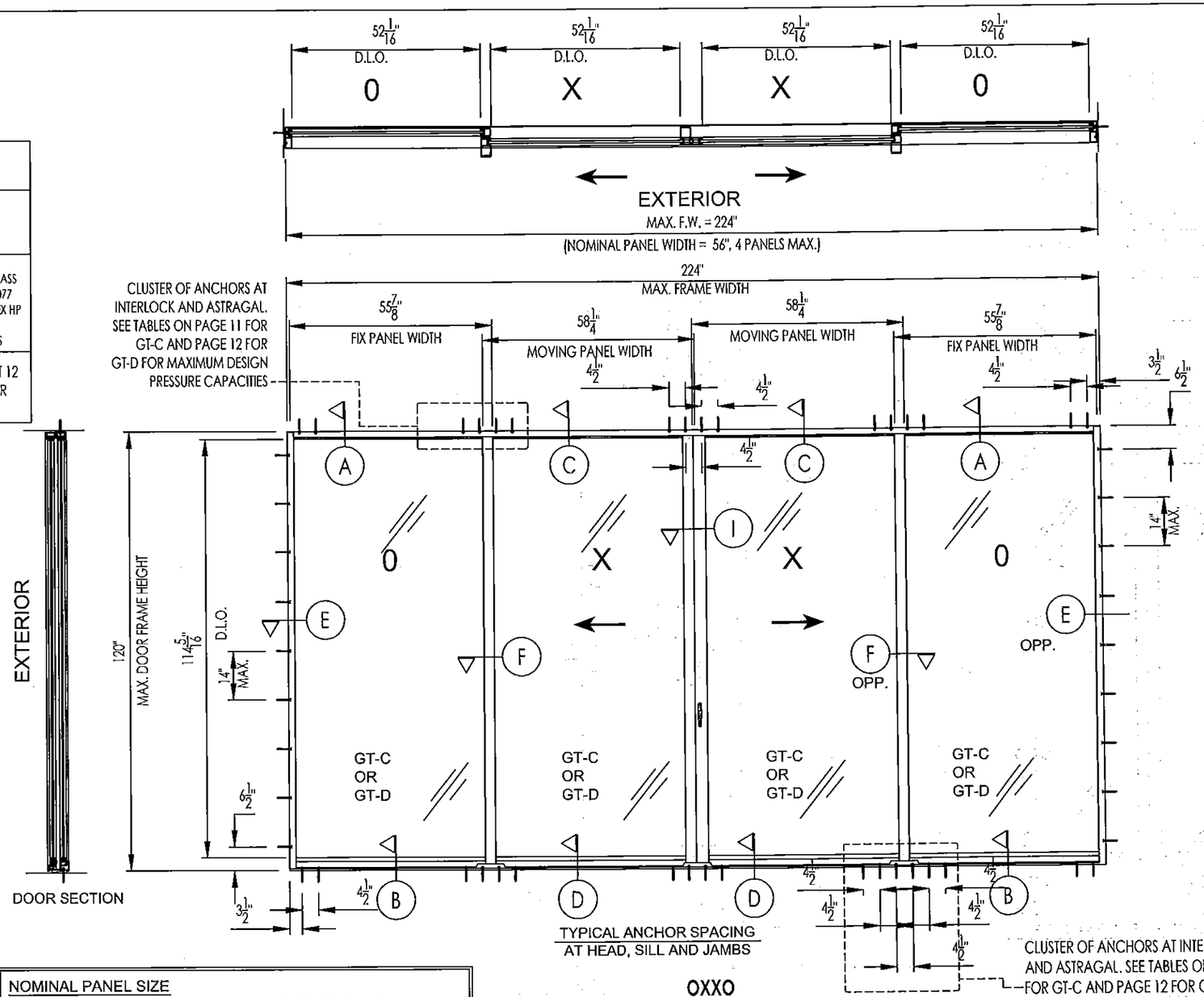

OXXO

GLOBAL PERFORMANCE WINDOWS SLIDING GLASS DOOR SERIES EUSA SD-20. SYSTEM 1 ELEVATION.

LEGEND FOR DOOR SIZES:
FW = FRAME WIDTH
FH = FRAME HEIGHT
DLO = DAYLIGHT OPENING

NOMINAL PANEL SIZE
PANEL WIDTH = FRAME WIDTH / NUMBER OF PANELS (4 MAX)
PANEL HEIGHT = FRAME HEIGHT (FH) - 1.375"

DLO SIZE:
DLO WIDTH = FIXED PANEL WIDTH - 3.8125"
DLO WIDTH = OPERABLE PANEL WIDTH - 6.1875"
DLO HEIGHT = F.H. - 5.6875"

ANCHOR SCHEDULE: REFER TO SHEETS 09 AND 10 FOR SCHEDULE AND TO SHEETS 11 AND 12 FOR CAPACITY

CLUSTER OF ANCHORS AT INTERLOCK AND ASTRAGAL. SEE TABLES ON PAGE 11 FOR GT-C AND PAGE 12 FOR GT-D FOR MAXIMUM DESIGN PRESSURE CAPACITIES ON SYSTEM 1

Approved as complying with the Florida Building Code
Date 4/30/15
NOA# 14-0806.07
Miami Dade Product Control
By [signature]

GLOBAL PERFORMANCE WINDOWS, INC. DBA EPSYLON USA

1881 S.W. 3rd STREET
POMPANO BEACH, FL 33069
PH: 954.942.3322
FAX: 954.942.3215
www.epsylon.ca

PROJECT NAME
ALUMINUM SLIDING GLASS DOOR SERIES EUSA SD20. LARGE MISSILE IMPACT

SHEET TITLE
SYSTEM 1
GENERIC ELEVATION
OXXO

SCALE: 3/8" = 1' - 0"

PREPARED BY:	DRAWN BY:
EPSYLON USA	L.S
ISSUE DATE: 7/23/2014	ISSUE DATE:

DRAWING REVISION LOG

No.	Date:	Revision:
01	10/10/14	PER REVIEWER COMMENTS
02	12/10/14	PER REVIEWER COMMENTS
03	03/17/15	PER REVIEWER COMMENTS

ENGINEER:

PARAMOUNT
CONSULTING & ENGINEERING
CA#29244
6157 NW 167th STREET SUITE F15
MIAMI, FL 33015
Ph: (305) 698-0550
F: (305) 698-0558
www.paramountce.com

SIGNED AND SEALED DRAWINGS CHECKED FOR STRUCTURAL COMPLIANCE ONLY, BY:
PARAMOUNT CONSULTING AND ENGINEERING, INC.

CESAR L. SOTO LICENSE No. 0058852 STATE OF FLORIDA PROFESSIONAL ENGINEER
CESAR L. SOTO P.E.
FL REG. # 59852

DWG No.
EUSA MDC-005

SYSTEM 1

DOOR WITH HEAVY INTERLOCKS

MAXIMUM ALLOWABLE DESIGN PRESSURE	
W/ GT-C Pd= +120 PSF -130 PSF	W/ GT-D Pd= +90 PSF -100 PSF
GT-C 9/16" THK. LAMI GLASS 1/4" HS GLASS + .090 DUPONT SENTRYGLAS + 1/4" HS GLASS	GT-D 9/16" THK. LAMI GLASS 1/4" HS GLASS + .077 SAFLEX CP & SAFLEX HP W/ PET CORE + 1/4" HS GLASS
REFER TO SHEET 11 FOR ANCHOR CAPACITY	REFER TO SHEET 12 FOR ANCHOR CAPACITY

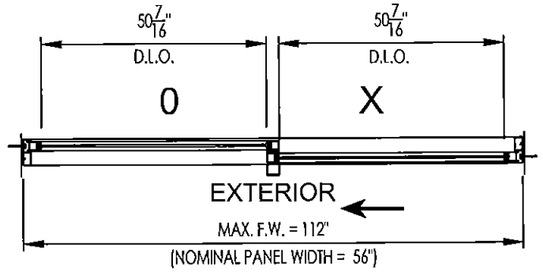

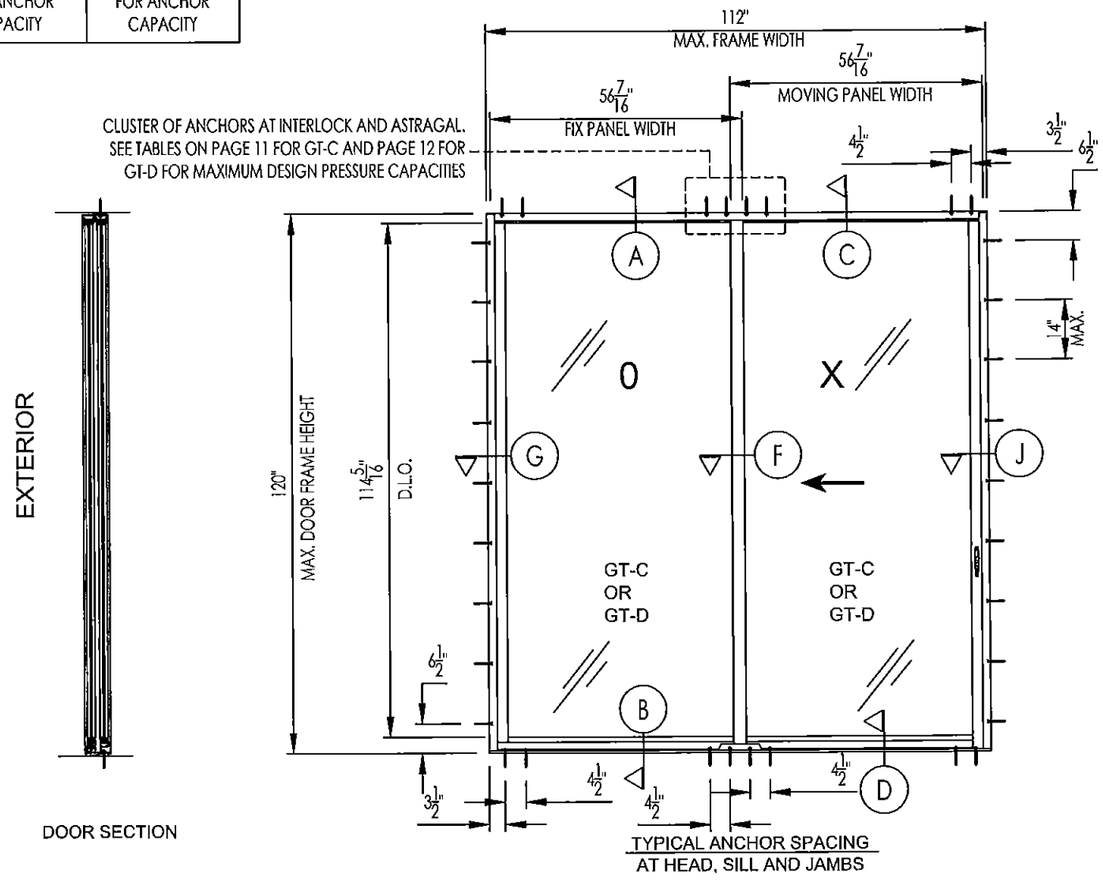

OX (SHOWN)

GLOBAL PERFORMANCE WINDOWS SLIDING GLASS DOOR
SERIES EUSA SD-20. SYSTEM 1 ELEVATION.

Approved as complying with the Florida Building Code
Date 4/30/15
NOA# 14-0806.02
Miami Dade Product Control
By Ishaq I. Chanda

LEGEND FOR DOOR SIZES:

FW = FRAME WIDTH
FH = FRAME HEIGHT
DLO = DAYLIGHT OPENING

NOMINAL PANEL SIZE:
PANEL WIDTH = FRAME WIDTH / NUMBER OF PANELS (4 MAX)
PANEL HEIGHT = FRAME HEIGHT (FH) - 1.375"

DLO SIZE
DLO WIDTH = FIXED PANEL WIDTH - 6"
DLO WIDTH = OPERABLE PANEL WIDTH - 6"
DLO HEIGHT = F.H. - 5.6875"

ANCHOR SCHEDULE: REFER TO SHEETS 09 AND 10 FOR SCHEDULE AND TO SHEETS 11 AND 12 FOR CAPACITY.

GLOBAL PERFORMANCE WINDOWS, INC.
DBA EPSYLON USA

1881 S.W. 3rd STREET
POMPANO BEACH, FL 33069
PH: 954.942.3322
FAX: 954.942.3215
www.epsylon.ca

PROJECT NAME
ALUMINUM SLIDING GLASS DOOR SERIES EUSA SD20. LARGE MISSILE IMPACT

SHEET TITLE
SYSTEM 1
GENERIC ELEVATION
OX (SHOWN)

SCALE: 3/8" = 1' - 0"

PREPARED BY: EPSYLON USA	DRAWN BY: L.S
ISSUE DATE: 7/23/2014	ISSUE DATE: -

DRAWING REVISION LOG

No.	Date:	Revision:
01	10/10/14	PER REVIEWER COMMENTS
02	12/10/14	PER REVIEWER COMMENTS
03	03/17/15	PER REVIEWER COMMENTS

ENGINEER:

PARAMOUNT
CONSULTING & ENGINEERING
CA#29244
6157 NW 167th STREET SUITE F15
MIAMI, FL 33015
Ph: (305) 698-0550
F: (305) 698-0558
www.paramountce.com

SIGNED AND SEALED DRAWINGS CHECKED FOR STRUCTURAL COMPLIANCE ONLY. BY:
PARAMOUNT CONSULTING AND ENGINEERING LLC

CESAR I. SOTO LICENSE No. 0068662 STATE OF FLORIDA PROFESSIONAL ENGINEER

DWG No.
EUSA MDC-005

SYSTEM 1 DOOR WITH HEAVY INTERLOCKS

GLOBAL PERFORMANCE WINDOWS, INC. DBA EPSYLON USA
ALUMINUM SLIDING GLASS DOOR
SERIES EUSA SD-20. TYPICAL APPROVED CONFIGURATIONS

ALLOWABLE DESIGN PRESSURE	
W/ GT-C Pd= +120 PSF -130 PSF	W/ GT-D Pd= +90 PSF -100 PSF

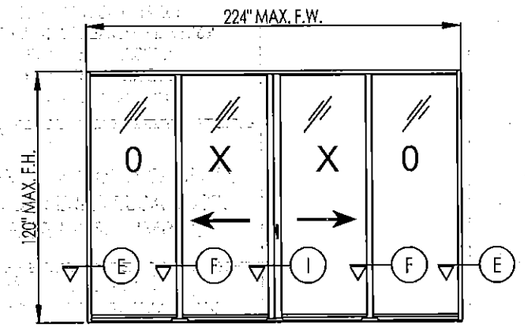

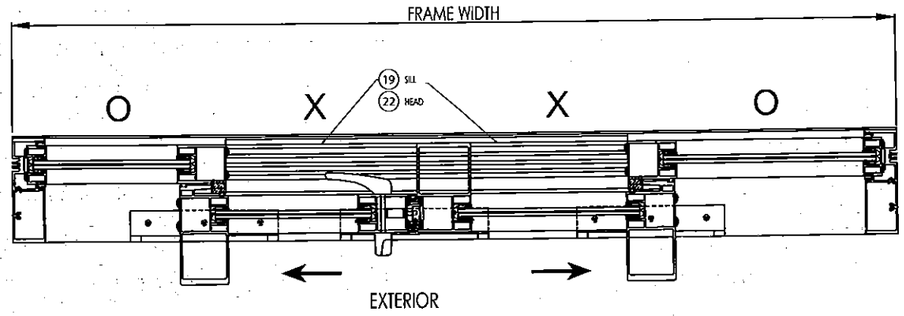

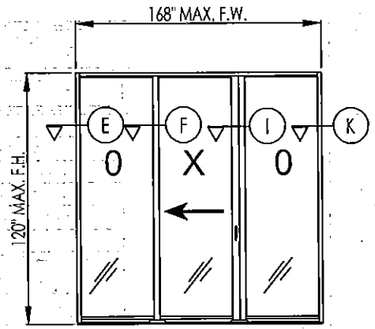

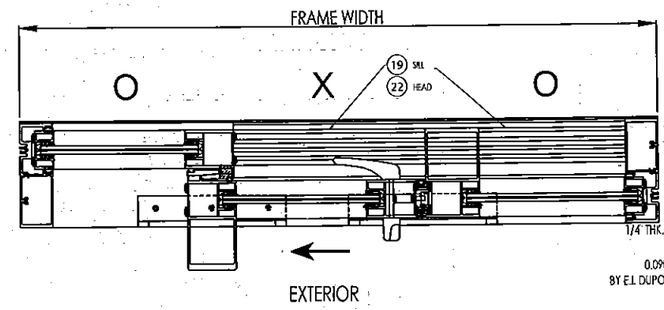

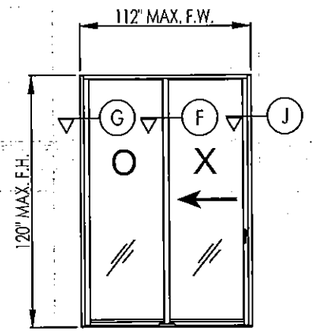

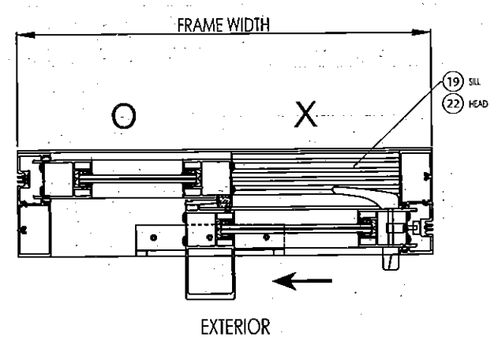

Approved as complying with the Florida Building Code
Date 4/30/15
NOA# 14-0806.02
Miami Dade Product Control
By [signature]

REFER TO SHEET 08 FOR GLAZING INSTRUCTIONS

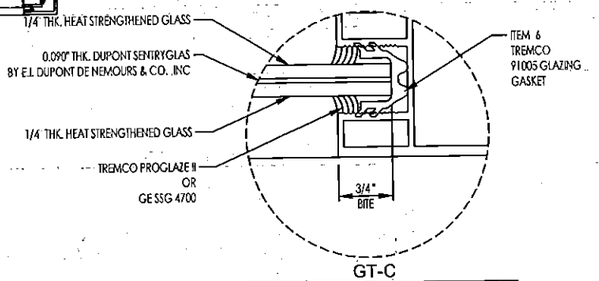

GT-C
9/16" THK. LAMINATED GLASS GLAZING DETAIL

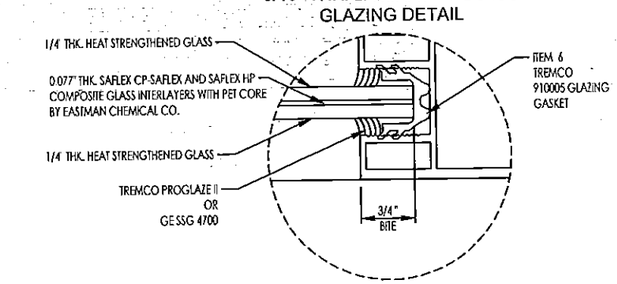

GT-D
9/16" THK. LAMINATED GLASS GLAZING DETAIL

GLOBAL PERFORMANCE WINDOWS, INC. DBA EPSYLON USA

1881 S.W. 3rd STREET
POMPANO BEACH, FL 33069
PH: 954.942.3322
FAX: 954.942.3215
www.epsylon.ca

PROJECT NAME
ALUMINUM SLIDING GLASS DOOR SERIES EUSA SD20. LARGE MISSILE IMPACT

SHEET TITLE SYSTEM 1 APPROVED CONFIGURATIONS
SCALE: N.T.S.

PREPARED BY: EPSYLON USA	DRAWN BY: L.S
ISSUE DATE: 7/23/2014	ISSUE DATE: -

DRAWING REVISION LOG

No.	Date:	Revision:
01	10/10/14	PER REVIEWER COMMENTS
02	12/10/14	PER REVIEWER COMMENTS
03	03/17/15	PER REVIEWER COMMENTS

ENGINEER:
PARAMOUNT
CONSULTING & ENGINEERING
CA#29244
6157 NW 167th STREET SUITE F15
MIAMI, FL 33015
Ph: (305) 698-0550
F: (305) 698-0558
www.paramountce.com

SIGNED AND SEALED DRAWINGS CHECKED FOR STRUCTURAL COMPLIANCE ONLY BY:
PARAMOUNT CONSULTING AND ENGINEERING, INC.

CESAR SOTO
LICENSE
No. 0[illegible]
STATE OF FLORIDA
PROFESSIONAL ENGINEER

CESAR SOTO
FL. REG. # 59652

DWG No.
EUSA MDC-005
SHEET 04 of 19

SYSTEM 2

DOOR WITH STANDARD INTERLOCKS

MAXIMUM ALLOWABLE DESIGN PRESSURE	
W/ GT-C Pd= +120 PSF -120 PSF	W/ GT-D Pd= +120 PSF -120 PSF
GT-C 9/16" THK. LAMI GLASS 1/4" HS GLASS + .090 DUPONT SENTRYGLAS + 1/4" HS GLASS	GT-D 9/16" THK. LAMI GLASS 1/4" HS GLASS + .077 SAFLEX CP & SAFLEX HP W/ PET CORE + 1/4" HS GLASS
REFER TO SHEET 13 FOR ANCHOR CAPACITY	

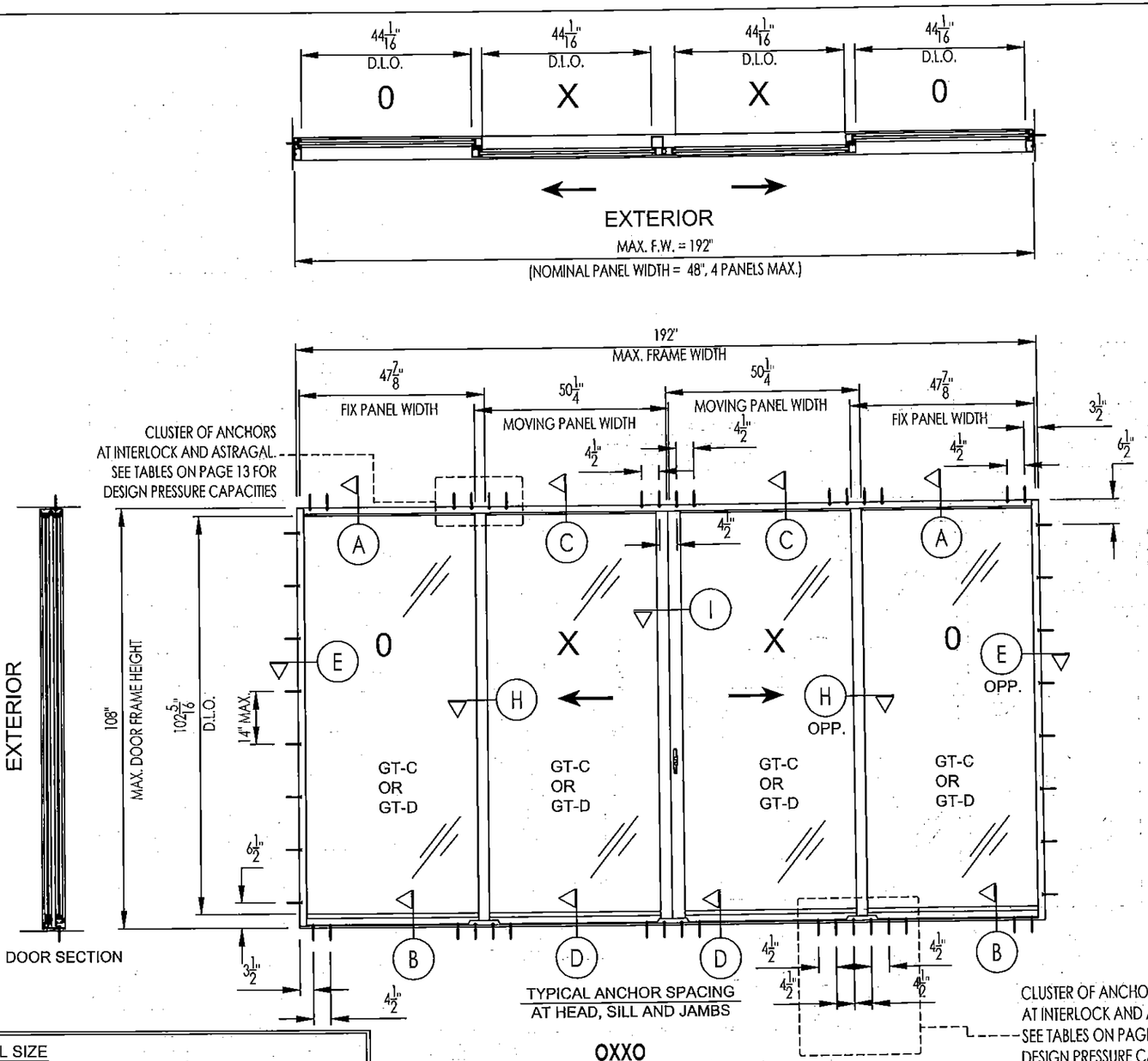

OXXO

GLOBAL PERFORMANCE WINDOWS SLIDING GLASS DOOR
SERIES EUSA SD-20. SYSTEM 2 ELEVATION.

LEGEND FOR DOOR SIZES:

FW = FRAME WIDTH
FH = FRAME HEIGHT
DLO = DAYLIGHT OPENING

NOMINAL PANEL SIZE
PANEL WIDTH = FRAME WIDTH / NUMBER OF PANELS (4 MAX)
PANEL HEIGHT = FRAME HEIGHT (FH) - 1.375"

DLO SIZE:
DLO WIDTH = FIXED PANEL WIDTH - 3.8125"
DLO WIDTH = OPERABLE PANEL WIDTH - 6.1875"
DLO HEIGHT = F.H. - 5.6875"

ANCHOR SCHEDULE: REFER TO SHEETS 09 AND 10 FOR SCHEDULE AND TO SHEET 13 FOR CAPACITY.

Approved as complying with the Florida Building Code
Date 4/30/15
NOA# 14-0806.02
Miami Dade Product Control
By

GLOBAL PERFORMANCE WINDOWS, INC.
DBA EPSYLON USA

1881 S.W. 3rd STREET
POMPANO BEACH, FL 33069
PH: 954.942.3322
FAX: 954.942.3215
www.epsylon.ca

PROJECT NAME
ALUMINUM SLIDING GLASS DOOR SERIES EUSA SD20. LARGE MISSILE IMPACT

SHEET TITLE
SYSTEM 2
GENERIC ELEVATION
OXXO

SCALE: 3/8" = 1' - 0"

PREPARED BY:	DRAWN BY:
EPSYLON USA	L.S
ISSUE DATE: 7/23/2014	ISSUE DATE:

DRAWING REVISION LOG

No.	Date:	Revision:
01	10/10/14	PER REVIEWER COMMENTS
02	12/10/14	PER REVIEWER COMMENTS
03	03/17/15	PER REVIEWER COMMENTS

ENGINEER:

PARAMOUNT
CONSULTING & ENGINEERING
CA#29244
6157 NW 167th STREET SUITE F15
MIAMI, FL 33015
Ph: (305) 698-0550
F: (305) 698-0558
www.paramountce.com

SIGNED AND SEALED DRAWINGS CHECKED FOR STRUCTURAL COMPLIANCE ONLY

PARAMOUNT CONSULTING AND ENGINEERING LLC

CESAR SOTO LICENSE No. 0068852 STATE OF FLORIDA PROFESSIONAL ENGINEER

CESAR SOTO, P.E.
FL. REG. #68852

DWG No.
EUSA MDC-005
SHEET 05 of 19

SYSTEM 2

DOOR WITH
STANDARD INTERLOCKS

MAXIMUM ALLOWABLE DESIGN PRESSURE	
W/ GT-C Pd= +120 PSF -120 PSF	W/ GT-D Pd= +120 PSF -120 PSF
GT-C 9/16" THK. LAMI GLASS 1/4" HS GLASS + .090 DUPONT SENTRYGLAS + 1/4" HS GLASS	GT-D 9/16" THK. LAMI GLASS 1/4" HS GLASS + .077 SAFLEX CP & SAFLEX HP W/ PET CORE + 1/4" HS GLASS
REFER TO SHEET 13 FOR ANCHOR CAPACITY	

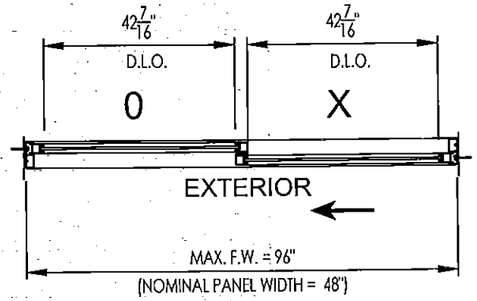

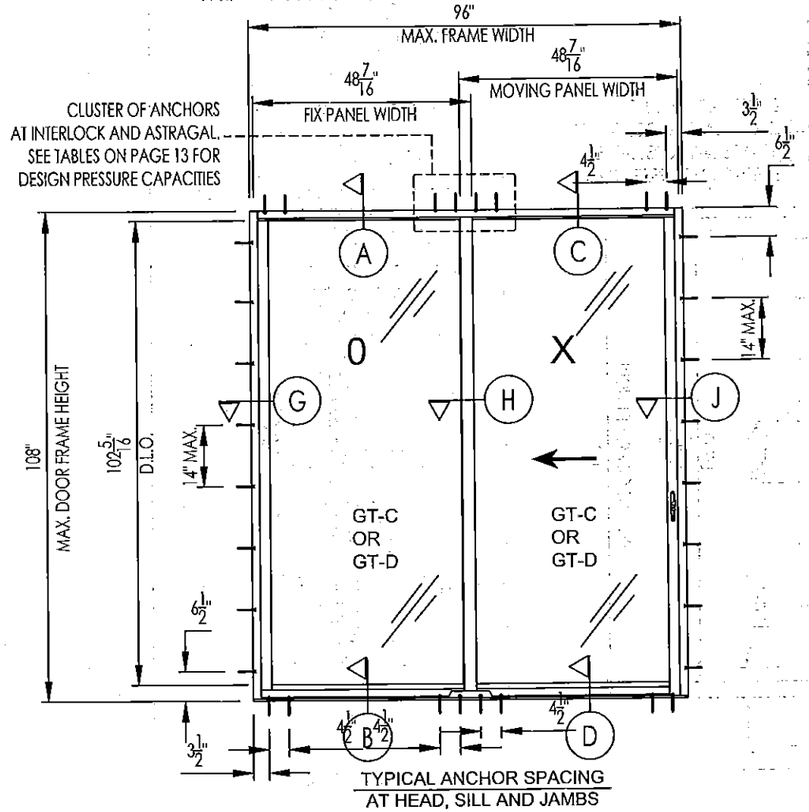

TYPICAL ANCHOR SPACING
AT HEAD, SILL AND JAMBS

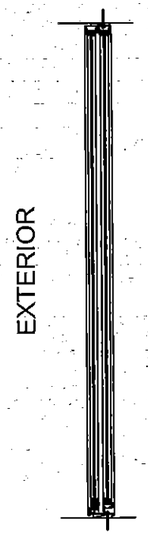

DOOR SECTION

LEGEND FOR DOOR SIZES:
FW = FRAME WIDTH
FH = FRAME HEIGHT
DLO = DAYLIGHT OPENING

NOMINAL PANEL SIZE:
PANEL WIDTH = FRAME WIDTH / NUMBER OF PANELS (4 MAX)
PANEL HEIGHT = FRAME HEIGHT (FH) - 1.375"

DLO SIZE
DLO WIDTH = FIXED PANEL WIDTH - 6"
DLO WIDTH = OPERABLE PANEL WIDTH - 6"
DLO HEIGHT = F.H. - 5.6875"

ANCHOR SCHEDULE: REFER TO SHEETS 09 AND 10 FOR SCHEDULE AND SHEET 13 FOR CAPACITY.

OX (SHOWN)
GLOBAL PERFORMANCE WINDOWS SLIDING GLASS DOOR
SERIES EUSA SD-20. SYSTEM 2 ELEVATION.

Approved as complying with the
Florida Building Code
Date 4/30/15
NOA# 14-0806.02
Miami Dade Product Control
By Ishaq I. Chand

GLOBAL PERFORMANCE WINDOWS, INC.
DBA EPSYLON USA

1881 S.W. 3rd STREET
POMPANO BEACH, FL 33069
PH: 954.942.3322
FAX: 954.942.3215
www.epsylon.ca

PROJECT NAME
ALUMINUM SLIDING GLASS DOOR SERIES EUSA SD20. LARGE MISSILE IMPACT

SHEET TITLE
SYSTEM 2
GENERIC ELEVATION
OX (SHOWN)
SCALE: 3/8" = 1' - 0"

PREPARED BY: EPSYLON USA	DRAWN BY: L.S
ISSUE DATE: 7/23/2014	ISSUE DATE: -

DRAWING REVISION LOG

No.	Date:	Revision:
01	10/10/14	PER REVIEWER COMMENTS
02	12/10/14	PER REVIEWER COMMENTS
03	03/17/15	PER REVIEWER COMMENTS

ENGINEER:
PARAMOUNT
CONSULTING & ENGINEERING
CA#29244
6157 NW 167th STREET SUITE F15
MIAMI, FL 33015
Ph: (305) 698-0550
F: (305) 698-0558
www.paramountce.com

SIGNED AND SEALED DRAWINGS CHECKED FOR STRUCTURAL COMPLIANCE ONLY. BY:
PARAMOUNT CONSULTING AND ENGINEERING, LLC

CESAR J. SOTO
LICENSE
No. 0059652
STATE OF FLORIDA
PROFESSIONAL ENGINEER

CESAR SOTO, P.E.
FL. REG. # 59652

DWG No.
EUSA MDC-005
SHEET 06 of 19

SYSTEM 2 DOOR WITH STANDARD INTERLOCKS

GLOBAL PERFORMANCE WINDOWS, INC DBA EPSYLON USA
ALUMINUM SLIDING GLASS DOOR
SERIES EUSA SD-20. TYPICAL APPROVED CONFIGURATIONS

ALLOWABLE DESIGN PRESSURE	
W/ GT-C Pd= +120 PSF -120 PSF	W/ GT-D Pd= +120 PSF -120 PSF

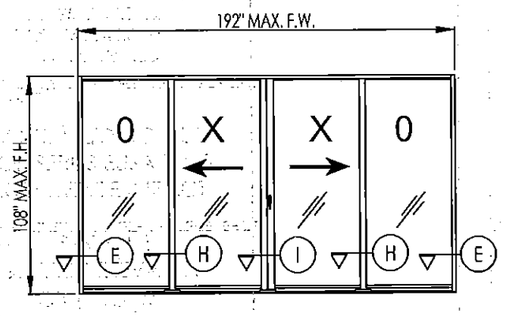

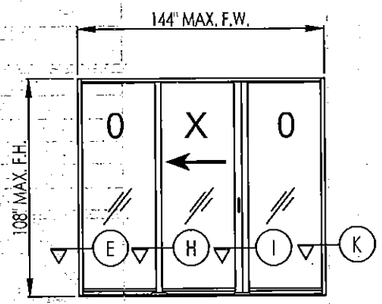

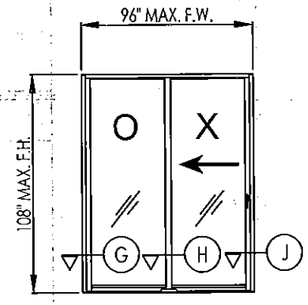

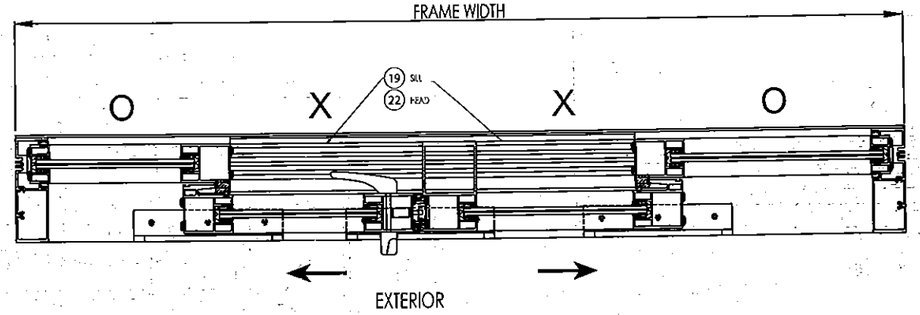

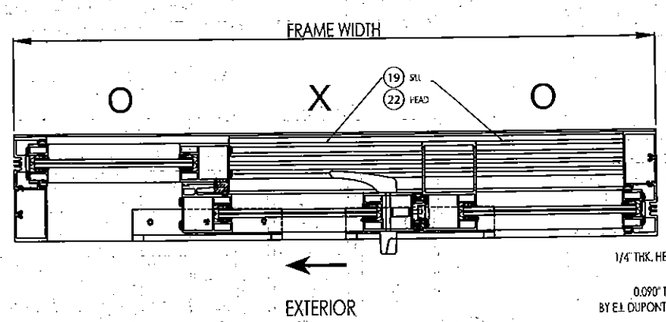

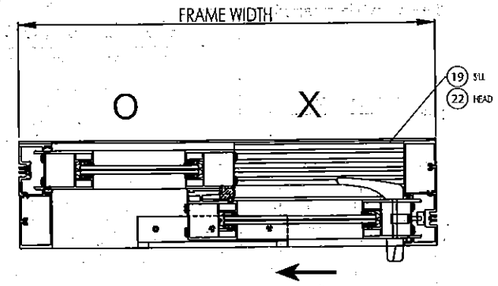

Approved as complying with the Florida Building Code
Date 4/30/15
NOA# 14-0806.02
Miami Dade Product Control
By Ishaq I. Chanda

REFER TO SHEET 08 FOR GLAZING INSTRUCTIONS

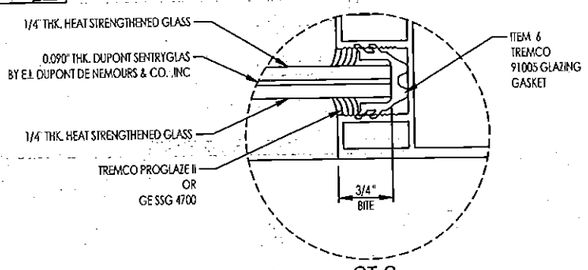

GT-C
9/16" THK. LAMINATED GLASS GLAZING DETAIL

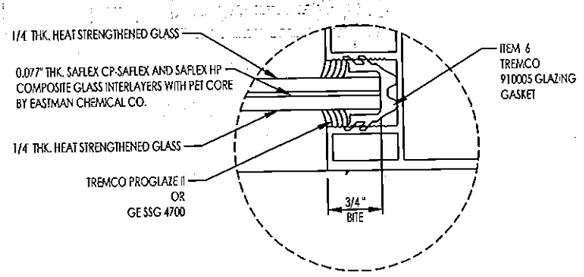

GT-D
9/16" THK. LAMINATED GLASS GLAZING DETAIL

GLOBAL PERFORMANCE WINDOWS, INC. DBA EPSYLON USA

1881 S.W. 3rd STREET
POMPANO BEACH, FL 33069
PH: 954.942.3322
FAX: 954.942.3215
www.epsylon.ca

PROJECT NAME
ALUMINUM SLIDING GLASS DOOR SERIES EUSA SD20. LARGE MISSILE IMPACT

SHEET TITLE
SYSTEM 2 APPROVED CONFIGURATIONS

SCALE: N.T.S.

PREPARED BY: EPSYLON USA	DRAWN BY: L.S
ISSUE DATE: 7/23/2014	ISSUE DATE:

DRAWING REVISION LOG

No.	Date:	Revision:
01	10/10/14	PER REVIEWER COMMENTS
02	12/10/14	PER REVIEWER COMMENTS
03	03/17/15	PER REVIEWER COMMENTS

ENGINEER:

PARAMOUNT
CONSULTING & ENGINEERING
CA#29244
6157 NW 167th STREET SUITE F15
MIAMI, FL 33015
Ph: (305) 698-0550
F: (305) 698-0558
www.paramountce.com

SIGNED AND SEALED DRAWINGS CHECKED FOR STRUCTURAL COMPLIANCE ONLY

PARAMOUNT CONSULTING AND ENGINEERING, INC.

CESAR SOTO LICENSE No. 0060052 STATE OF FLORIDA PROFESSIONAL ENGINEER

CESAR SOTO, P.E.
FL. REG. # 59652

DWG No.
EUSA MDC-005

SYSTEMS 1 AND 2
GLOBAL PERFORMANCE WINDOWS, INC. DBA EPSYLON USA
EPSYLON ALUMINUM SLIDING GLASS DOOR
SERIES SD-20. GLAZING INSTRUCTIONS

SYSTEM 1: REFER TO SHEETS 02 THRU 04 FOR DESIGN PRESSURE CAPACITY BASED ON GLASS TYPE
SYSTEM 2: REFER TO SHEETS 05 THRU 07 FOR DESIGN PRESSURE CAPACITY BASED ON GLASS TYPE

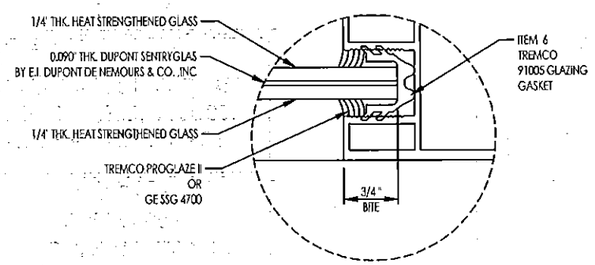

GT-C
9/16" THK. LAMINATED GLASS GLAZING DETAIL

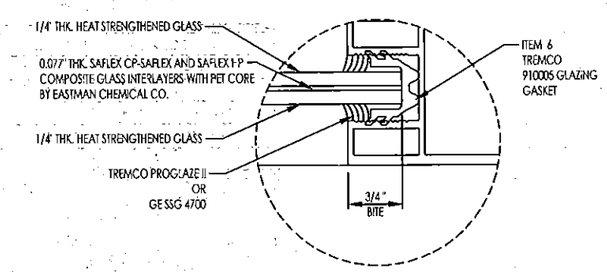

GT-D
9/16" THK. LAMINATED GLASS GLAZING DETAIL

Approved as complying with the
Florida Building Code
Date 4/30/15
NOA# 14-0806.02
Miami Dade Product Control
By

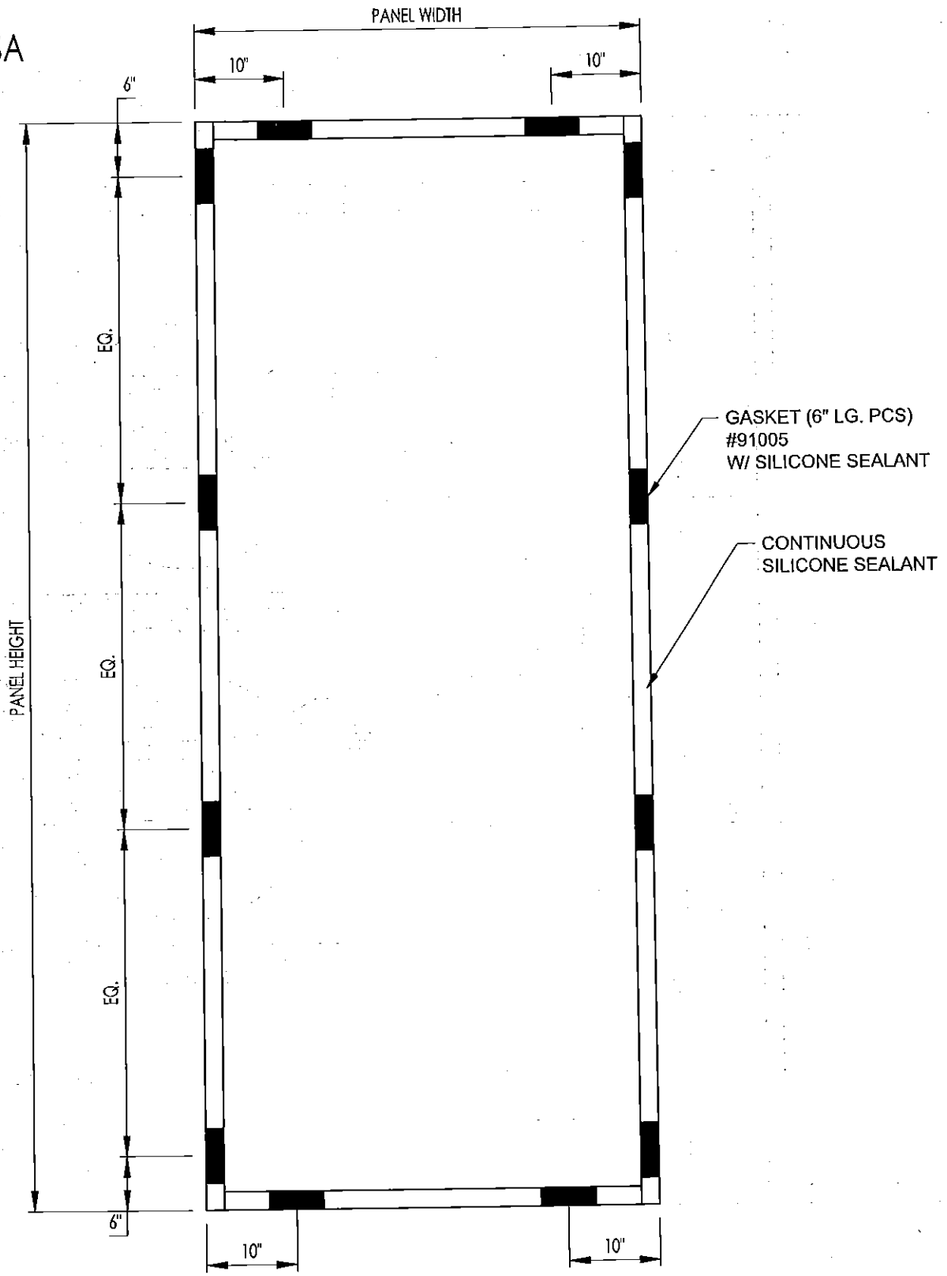

GLOBAL PERFORMANCE WINDOWS, INC. DBA EPSYLON USA

1881 S.W. 3rd STREET
POMPANO BEACH, FL 33069
PH: 954.942.3322
FAX: 954.942.3215
www.epsylon.ca

PROJECT NAME
ALUMINUM SLIDING GLASS DOOR SERIES EUSA SD20. LARGE MISSILE IMPACT

SHEET TITLE SYSTEMS 1 AND 2 APPROVED GLAZING DETAILS

SCALE: N.T.S.

PREPARED BY: EPSYLON USA	DRAWN BY: L.S
ISSUE DATE: 7/23/2014	ISSUE DATE: -

DRAWING REVISION LOG

No.	Date.	Revision:
01	10/10/14	PER REVIEWER COMMENTS
02	12/10/14	PER REVIEWER COMMENTS
03	03/17/15	PER REVIEWER COMMENTS

ENGINEER:

PARAMOUNT
CONSULTING & ENGINEERING
CA#29244
6157 NW 167th STREET SUITE F15
MIAMI, FL 33015
Ph: (305) 698-0550
F: (305) 698-0558
www.paramountce.com

SIGNED AND SEALED DRAWINGS CHECKED FOR STRUCTURAL ADEQUACY BY:
PARAMOUNT CONSULTING AND ENGINEERING, LLC

CERTIFICATE OF AUTHORIZATION LICENSE No. 0000652
STATE OF FLORIDA PROFESSIONAL ENGINEER
CESAR SOTO, P.E.
FL. REG. # 69652

DWG No.
EUSA MDC-005
SHEET 08 of 19

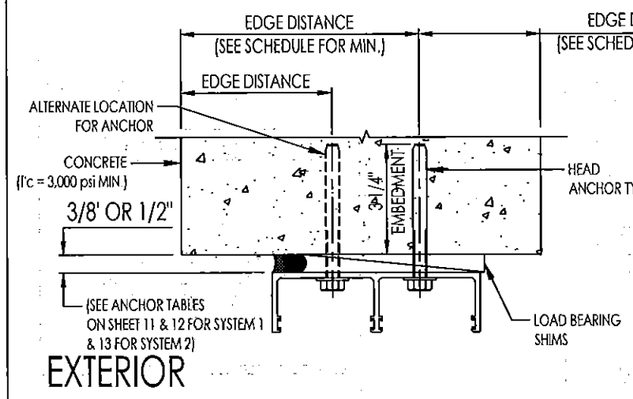

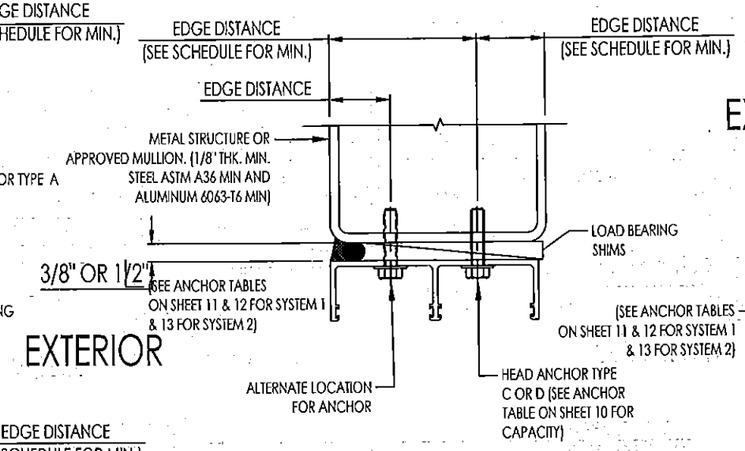

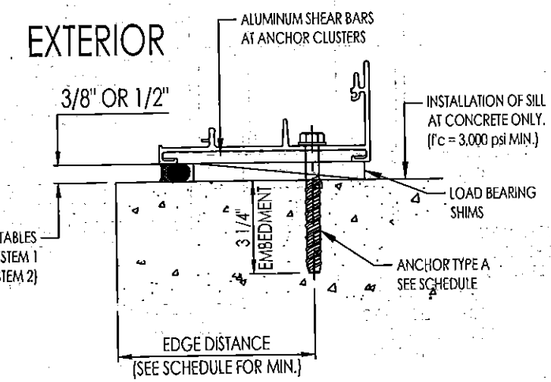

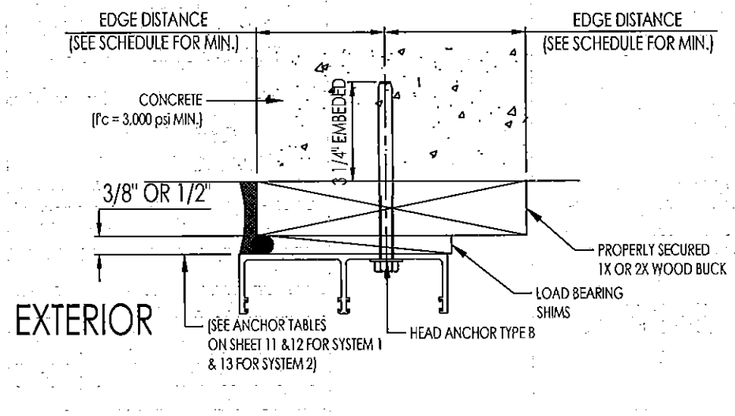

FOR SYSTEMS 1 AND 2

ANCHOR SCHEDULE FOR HEAD AND SILL (SEE ELEVATIONS FOR TYPICAL SPACING)

- ANCHOR TYPE A (HEAD AND SILL):
  3/8"Ø KWIK HUS-EZ (HILTI, Shank Diameter = 0.375 in min., Root Diameter = 0.3346 in min. Fy = 95.7 Ksi, Fu = 120.3 Ksi) WITH 3 1/4" EMBEDMENT, 4 1/2" MINIMUM SPACING AND 4 1/2" EDGE DISTANCE INTO 3,000 psi CONCRETE.
- ANCHOR TYPE B (HEAD):
  3/8"Ø KWIK HUS-EZ (HILTI, Shank Diameter = 0.375 in min., Root Diameter = 0.3346 in min. Fy = 95.7 Ksi, Fu = 120.3 Ksi) THROUGH UP TO 2x WOOD BUCK WITH 3 1/4" EMBEDMENT, 4 1/2" MINIMUM SPACING AND 4 1/2" EDGE DISTANCE INTO 3,000 psi CONCRETE. 2" MIN EDGE DISTANCE TO WOOD.
- ANCHOR TYPE C (HEAD):
  3/8"Ø GRADE 5 MACHINE SCREW (Fy = 90 Ksi , Fu = 120 Ksi) INTO METAL STRUCTURE (STEEL Fy = 36 Ksi OR ALUMINUM Fy = 25 kSI, 1/8" THK. MINIMUM) WITH MINIMUM 3 THREADS PAST SUBSTRATE.
- ANCHOR TYPE D (HEAD):
  1/2"Ø GRADE 5 MACHINE SCREW (Fy = 90 Ksi , Fu = 120 Ksi) INTO METAL STRUCTURE (STEEL Fy = 36 Ksi OR ALUMINUM Fy = 25 kSI, 1/8" THK. MINIMUM) WITH MINIMUM 3 THREADS PAST SUBSTRATE.
- WOOD BUCK ANCHORAGE BY OTHERS IS NOT PART OF THIS APPROVAL AND SHALL BE CAPABLE OF TRANSFERRING LOADS FROM GLAZING SYSTEM TO SUPPORTING STRUCTURE.

Approved as complying with the Florida Building Code
Date 4/30/15
NOA# 14-0806.02
Miami Dade Product Control
By

GLOBAL PERFORMANCE WINDOWS, INC.
DBA EPSYLON USA

1881 S.W. 3rd STREET
POMPANO BEACH, FL 33069
PH: 954.942.3322
FAX: 954.942.3215
www.epsylon.co

PROJECT NAME
ALUMINUM SLIDING GLASS DOOR SERIES EUSA SD20. LARGE MISSILE IMPACT

SHEET TITLE
HEAD AND SILL ANCHORAGE SCHEDULE AND DETAILS

SCALE:

PREPARED BY: EPSYLON USA	DRAWN BY: L.S
ISSUE DATE: 7/23/2014	ISSUE DATE:

DRAWING REVISION LOG

No.	Date:	Revision:
01	10/10/14	PER REVIEWER COMMENTS
02	12/10/14	PER REVIEWER COMMENTS
03	03/17/15	PER REVIEWER COMMENTS

ENGINEER:

PARAMOUNT
CONSULTING & ENGINEERING
CA#29244
6157 NW 167th STREET SUITE F15
MIAMI, FL 33015
Ph: (305) 698-0550
F: (305) 698-0558
www.paramountce.com

SIGNED AND SEALED DRAWINGS CHECKED FOR STRUCTURAL COMPLIANCE ONLY BY: PARAMOUNT CONSULTING AND ENGINEERING, LLC

CESAR SOTO
No. 59652
STATE OF FLORIDA
PROFESSIONAL ENGINEER

CESAR SOTO, P.E.
FL. REG. # 59652

DWG No.
EUSA MDC-005
SHEET 09 of 19

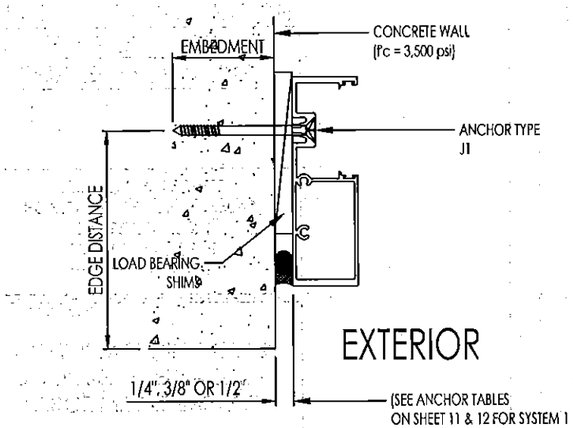

EXTERIOR

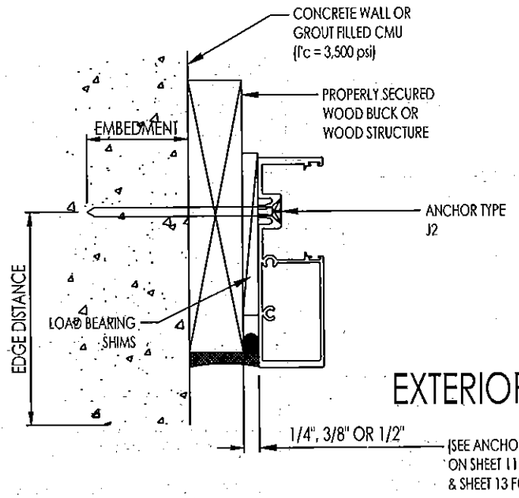

EXTERIOR

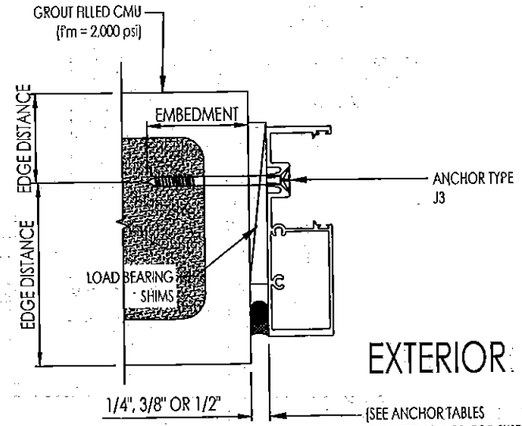

EXTERIOR

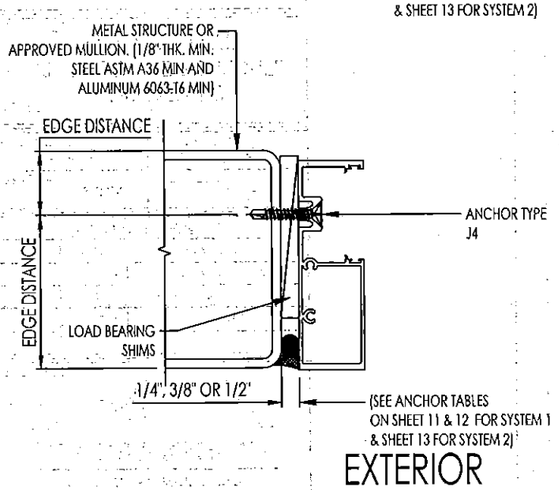

EXTERIOR

ANCHOR SCHEDULE FOR JAMBS

- ANCHOR TYPE J1:
  5/16"Ø ELCO ULTRACON (Fy= 155 Ksi, Fu = 177 Ksi) WITH 1 3/4" EMBEDMENT AND 2 1/2" EDGE DISTANCE INTO 3,500 psi CONCRETE MINIMUM

- ANCHOR TYPE J2:
  5/16"Ø ELCO ULTRACON (Fy= 155 Ksi, Fu = 177 Ksi) THROUGH UP TO 2x WOOD BUCK WITH 1 3/4" EMBEDMENT AND 2 1/2" EDGE DISTANCE INTO 3,500 psi CONCRETE MINIMUM

- ANCHOR TYPE J3:
  5/16"Ø ELCO ULTRACON (Fy= 155 Ksi, Fu = 177 Ksi) WITH 1 3/4" EMBEDMENT AND 3 1/8" EDGE DISTANCE INTO GROUT FILLED BLOCK (f'm=2,000 psi)

- ANCHOR TYPE J4:
  5/16"Ø ELCO DRILFLEX (Fy= 92 Ksi, Fu = 120 Ksi) INTO 1/8" THK. MINIMUM METAL STRUCTURE (STEEL ASTM A36 min. ALUMINUM 6063-T6 min.)

Approved as complying with the
Florida Building Code
Date 4/30/15
NOA# 14-0806.02
Miami Dade Product Control
By Ishaq I. Chanda

GLOBAL PERFORMANCE WINDOWS, INC.
DBA EPSYLON USA

1881 S.W. 3rd STREET
POMPANO BEACH, FL 33069
PH: 954.942.3322
FAX: 954.942.3215
www.epsylon.ca

PROJECT NAME

ALUMINUM SLIDING GLASS DOOR SERIES EUSA SD20. LARGE MISSILE IMPACT

SHEET TITLE

JAMB ANCHORAGE SCHEDULE AND DETAILS

SCALE:

PREPARED BY: EPSYLON USA	DRAWN BY: L.S
ISSUE DATE: 7/23/2014	ISSUE DATE:

DRAWING REVISION LOG

No.	Date:	Revision:
01	10/10/14	PER REVIEWER COMMENTS
02	12/10/14	PER REVIEWER COMMENTS
03	03/17/15	PER REVIEWER COMMENTS

ENGINEER:

PARAMOUNT
CONSULTING & ENGINEERING
CA#29244
6157 NW 167th STREET SUITE F15
MIAMI, FL 33015
Ph: (305) 698-0550
F: (305) 698-0558
www.paramountce.com

SIGNED AND SEALED DRAWINGS CHECKED FOR STRUCTURAL COMPLIANCE ONLY

PARAMOUNT CONSULTING AND ENGINEERING, LLC

CESAR SOLO LICENSE No. 0068852 STATE OF FLORIDA PROFESSIONAL ENGINEER

CESAR SOLO, P.E.
FL. REG. # 68852

DWG No.

EUSA MDC-005

ANCHORAGE CAPACITY DATA/TABLES

SYSTEM 1 With GT-C

DOOR WITH HEAVY INTERLOCKS

MAXIMUM ALLOWABLE DESIGN PRESSURE | W/ GT-C Pd= +120 PSF -130 PSF

TABLE 1.C-1. HEAD ANCHORS CAPACITY CHARTS

* SYSTEM 1: ALLOWABLE DESIGN PRESSURE (PSF) BASED ON ANCHORS AT HEAD								
56" wide by 120" tall panel with heavy duty interlock / GLASS TYPE C								
	FOR 3/8" MAX. SHIM GAP				FOR 1/2" MAX. SHIM GAP			
BOLT	4 BOLTS		6 BOLTS		4 BOLTS		6 BOLTS	
TYPE	POS (+)	NEG (-)	POS (+)	NEG (-)	POS (+)	NEG (-)	POS (+)	NEG (-)
A	120.0	130.0	120.0	130.0	110.0	110.0	120.0	130.0
B	47.5	47.5	71.3	71.3	47.5	47.5	71.3	71.3
C	77.3	77.3	110.0	116.0	62.2	62.2	93.3	93.3
D	120.0	130.0	120.0	130.0	120.0	130.0	120.0	130.0

TABLE 1.C-2. SILL ANCHORS CAPACITY CHARTS

* SYSTEM 1: ALLOWABLE DESIGN PRESSURE (PSF) BASED ON ANCHORS AT SILL								
56" wide by 120" tall panel with heavy duty interlock / GLASS TYPE C								
	FOR 3/8" MAX. SHIM GAP				FOR 1/2" MAX. SHIM GAP			
BOLT	4 BOLTS		6 BOLTS		4 BOLTS		6 BOLTS	
TYPE	POS (+)	NEG (-)	POS (+)	NEG (-)	POS (+)	NEG (-)	POS (+)	NEG (-)
A	120.0	130.0	120.0	130.0	110.0	110.0	120.0	130.0

TABLE 1.C-3. JAMB ANCHORS CAPACITY CHARTS

*SYSTEM 1: ALLOWABLE DESIGN PRESSURE (PSF) BASED ON FASTENERS AT JAMBS						
NOMINAL 56" X 120" PANELS (BOLT MAX SPACING = 14" O.C.) GLASS TYPE C						
BOLT	FOR 1/4" MAX. SHIM GAP		FOR 3/8" MAX. SHIM GAP		FOR 1/2" MAX. SHIM GAP	
TYPE	POS (+)	NEG (-)	POS (+)	NEG (-)	POS (+)	NEG (-)
J1	120.0	130.0	120.0	122.3	98.4	98.4
J2	93.3	93.3	93.3	93.3	93.3	93.3
J3	120.0	130.0	120.0	122.3	98.4	98.4
J4	120.0	129.8	96.7	96.7	77.0	77.0

* The above shown tables apply also to all sizes smaller than the nominal listed. It shall be responsibility of the contractor, architect or engineer of record to verify that all sizes are permitted by F.B.C. and meet all applicable egress, accessibility and FHA requirements, regulations and local ordinances.

TABLE USE INSTRUCTIONS

1. AFTER DETERMINING THAT SGD SYSTEM 1 IS BEING USED PER PROJECT DIMENSIONS AND MAXIMUM ALLOWABLE DESIGN PRESSURES ACCORDING TO SHEETS 02 THROUGH 04, USE GT-C FOR Pd Max = +120 / -130 psf
2. DETERMINE APPLICABLE SUBSTRATES AT HEAD, SILL AND JAMBS PER PROJECT CONDITIONS. REFER TO SHEETS 9 AND 10 FOR ANCHOR TYPE SCHEDULE DEPENDING ON SUBSTRATE.
3. DETERMINE APPLICABLE SHIM GAPS AT HEAD, SILL AND JAMBS AND, USING TABLES 1.C-1 FOR HEAD, 1.C-2 FOR SILL AND 1.C-3 FOR JAMBS, SELECT ALLOWABLE DESIGN PRESSURES FOR EACH SYSTEM BASED ON ANCHOR (BOLT) TYPE AND SHIM GAP.
4. THE LOWEST ALLOWABLE DESIGN PRESSURE FROM ITEMS 1 THRU 3 ABOVE WILL CONTROL FOR THE ENTIRE SYSTEM.

TABLE USE EXAMPLE

EXAMPLE 1.C: A SYSTEM 1 W/ GT-C. FRAME CONNECTED TO CONCRETE AT HEAD AND SILL, METAL AT JAMBS, AND HAVING 3/8" SHIM GAP AT HEAD , 1/2" SHIM GAP AT SILL, AND 1/4" SHIM GAP AT JAMBS:

DATA:

SYSTEM: SYSTEM 1 W/ GT-C
SUBSTRATE HEAD: METAL (ANCHOR C)
SUBSTRATE SILL: CONCRETE (ANCHOR A)
SUBSTRATE JAMBS: METAL (ANCHOR J4)
SHIM GAP HEAD: 3/8" WITH CLUSTER OF SIX (6) ANCHORS
SHIM GAP SILL: ½ WITH CLUSTER OF FOUR (4) ANCHORS
SHIM GAP JAMBS: 1/4"

RESULTS:

MAX. ALLOWABLE DESIGN PRESSURE FOR SYSTEM 1 FRAME W/ GT-D = + 120 PSF / -130 PSF (PER SHEETS 2, 3 AND 4)
MAX. ALLOWABLE DESIGN PRESSURE PER HEAD CONNECTION = + 110 PSF / - 116 PSF (PER TABLE 1.C-1)
MAX. ALLOWABLE DESIGN PRESSURE PER SILL CONNECTION = + 110 PSF / - 110 PSF (PER TABLE 1.C-2)
MAX. ALLOWABLE DESIGN PRESSURE PER JAMB CONNECTION = + 120 PSF / -129.8 PSF (PER TABLE 1.C-3)

THEREFORE MAX. ALLOWABLE DESIGN PRESSURE WITH LOWEST CONTROLLING VALUES FOR ENTIRE SYSTEM, Pd = + 110 PSF / -110 PSF

Approved as complying with the Florida Building Code
Date 4/30/15
NOA# 14-0806.02
Miami Dade Product Control
By Ishaq I. Chanda

GLOBAL PERFORMANCE WINDOWS, INC. DBA EPSYLON USA

1881 S.W. 3rd STREET
POMPANO BEACH, FL 33069
PH: 954.942.3322
FAX: 954.942.3215
www.epsylon.ca

PROJECT NAME

ALUMINUM SLIDING GLASS DOOR SERIES EUSA SD20. LARGE MISSILE IMPACT

SHEET TITLE

SYSTEM 1 WITH GT-C ANCHORAGE SCHEDULE

SCALE:

PREPARED BY:	DRAWN BY:
EPSYLON USA	L.S
ISSUE DATE: 7/23/2014	ISSUE DATE:

DRAWING REVISION LOG

No.	Date:	Revision:
01	10/10/14	PER REVIEWER COMMENTS
02	12/10/14	PER REVIEWER COMMENTS
03	03/17/15	PER REVIEWER COMMENTS

ENGINEER:

PARAMOUNT
CONSULTING & ENGINEERING
CA#29244
6157 NW 167th STREET SUITE F15
MIAMI, FL 33015
Ph: (305) 698-0550
F: (305) 698-0558
www.paramountce.com

FOR NOA'S SEALED DRAWINGS CHECKED FOR STRUCTURAL COMPLIANCE ONLY BY: PARAMOUNT CONSULTING ENGINEERING, LLC

CESAR SOTO LICENSE No. 0059652 STATE OF FLORIDA PROFESSIONAL ENGINEER

CESAR SOTO, P.E.
FL. REG. # 59652

DWG No.

EUSA MDC-005

ANCHORAGE CAPACITY DATA/TABLES

SYSTEM 1 With GT-D

DOOR WITH HEAVY INTERLOCKS

MAXIMUM ALLOWABLE DESIGN PRESSURE

W/ GT-D
Pd= +90 PSF
-100 PSF

TABLE 1.D-1. HEAD ANCHORS CAPACITY CHARTS

* SYSTEM 1: ALLOWABLE DESIGN PRESSURE (PSF) BASED ON ANCHORS AT HEAD								
56" wide by 120" tall panel with heavy duty interlock / GLASS TYPE D								
	FOR 3/8" MAX. SHIM GAP				FOR 1/2" MAX. SHIM GAP			
BOLT	4 BOLTS		6 BOLTS		4 BOLTS		6 BOLTS	
TYPE	POS (+)	NEG (-)	POS (+)	NEG (-)	POS (+)	NEG (-)	POS (+)	NEG (-)
A	90.0	100.0	90.0	100.0	90.0	100.0	90.0	100.0
B	48.0	48.0	72.0	72.0	48.0	48.0	72.0	72.0
C	78.1	78.1	90.0	100.0	62.8	62.8	90.0	94.3
D	90.0	100.0	90.0	100.0	90.0	100.0	90.0	100.0

TABLE 1.D-2. SILL ANCHORS CAPACITY CHARTS

* SYSTEM 1: ALLOWABLE DESIGN PRESSURE (PSF) BASED ON ANCHORS AT SILL								
56" wide by 120" tall panel with heavy duty interlock / GLASS TYPE D								
	FOR 3/8" MAX. SHIM GAP				FOR 1/2" MAX. SHIM GAP			
BOLT	4 BOLTS		6 BOLTS		4 BOLTS		6 BOLTS	
TYPE	POS (+)	NEG (-)	POS (+)	NEG (-)	POS (+)	NEG (-)	POS (+)	NEG (-)
A	90.0	100.0	90.0	100.0	90.0	100.0	90.0	100.0

TABLE 1.D-3. JAMB ANCHORS CAPACITY CHARTS

* SYSTEM 1: ALLOWABLE DESIGN PRESSURE (PSF) BASED ON FASTENERS AT JAMBS						
NOMINAL 56" X 120" PANELS (BOLT MAX SPACING = 14" O.C.) GLASS TYPE D						
BOLT	FOR 1/4" MAX. SHIM GAP		FOR 3/8" MAX. SHIM GAP		FOR 1/2" MAX. SHIM GAP	
TYPE	POS (+)	NEG (-)	POS (+)	NEG (-)	POS (+)	NEG (-)
J1	90.0	100.0	90.0	100.0	90.0	98.4
J2	90.0	93.3	90.0	93.3	90.0	93.3
J3	90.0	100.0	90.0	100.0	90.0	98.4
J4	90.0	100.0	90.0	96.7	77.0	77.0

* The above shown tables apply also to all sizes smaller than the nominal listed. It shall be responsibility of the contractor, architect or engineer of record to verify that all sizes are permitted by F.B.C. and meet all applicable egress, accessibility and FHA requirements, regulations and local ordinances.

TABLE USE INSTRUCTIONS

1. AFTER DETERMINING THAT SGD SYSTEM 1 IS BEING USED PER PROJECT DIMENSIONS AND MAXIMUM ALLOWABLE DESIGN PRESSURES ACCORDING TO SHEETS 02 THROUGH 04, USE GT-D FOR Pd Max = +90 / -100 psf
2. DETERMINE APPLICABLE SUBSTRATES AT HEAD, SILL AND JAMBS PER PROJECT CONDITIONS. REFER TO SHEETS 9 AND 10 FOR ANCHOR TYPE SCHEDULE DEPENDING ON SUBSTRATE.
3. DETERMINE APPLICABLE SHIM GAPS AT HEAD, SILL AND JAMBS AND, USING TABLES 1.D-1. FOR HEAD, 1.D-2 FOR SILL AND 1.D-3 FOR JAMBS, SELECT ALLOWABLE DESIGN PRESSURES FOR EACH SYSTEM BASED ON ANCHOR (BOLT) TYPE AND SHIM GAP.
4. THE LOWEST ALLOWABLE DESIGN PRESSURE FROM ITEMS 1 THRU 3 ABOVE WILL CONTROL FOR THE ENTIRE SYSTEM.

TABLE USE EXAMPLE

EXAMPLE 1.D: A SYSTEM 1 W/ GT-D. FRAME CONNECTED TO CONCRETE AT HEAD AND SILL, METAL AT JAMBS, AND HAVING 3/8" SHIM GAP AT HEAD , 1/2" SHIM GAP AT SILL, AND 3/8" SHIM GAP AT JAMBS:

DATA:

SYSTEM: SYSTEM 1 W/ GT-D
SUBSTRATE HEAD: CONCRETE (ANCHOR A)
SUBSTRATE SILL: CONCRETE (ANCHOR A)
SUBSTRATE JAMBS: METAL (ANCHOR J4)
SHIM GAP HEAD: 3/8" WITH CLUSTER OF FOUR (4) ANCHORS
SHIM GAP SILL: ½ WITH CLUSTER OF FOUR (4) ANCHORS
SHIM GAP JAMBS: 3/8"

RESULTS:

MAX. ALLOWABLE DESIGN PRESSURE FOR SYSTEM 1 FRAME W/ GT-D = + 90 PSF / -100 PSF (PER SHEETS 2, 3 AND 4)
MAX. ALLOWABLE DESIGN PRESSURE PER HEAD CONNECTION = + 90 PSF / - 100 PSF (PER TABLE 1.D-1)
MAX. ALLOWABLE DESIGN PRESSURE PER SILL CONNECTION = + 90 PSF / - 100 PSF (PER TABLE 1.D-2)
MAX. ALLOWABLE DESIGN PRESSURE PER JAMB CONNECTION = + 90 PSF / -96.7 PSF (PER TABLE 1.D-3)

THEREFORE MAX. ALLOWABLE DESIGN PRESSURE WITH LOWEST CONTROLLING VALUES FOR ENTIRE SYSTEM, Pd = + 90 PSF / -96.7 PSF

Approved as complying with the Florida Building Code
Date 4/30/15
NOA# 14-0806.02
Miami Dade Product Control
By Ishaq I. Chanda

GLOBAL PERFORMANCE WINDOWS, INC. DBA EPSYLON USA

1881 S.W. 3rd STREET
POMPANO BEACH, FL 33069
PH: 954.942.3322
FAX: 954.942.3215
www.epsylon.ca

PROJECT NAME

ALUMINUM SLIDING GLASS DOOR SERIES EUSA SD20. LARGE MISSILE IMPACT

SHEET TITLE

SYSTEM 1 WITH GT-D ANCHORAGE SCHEDULE

SCALE:

PREPARED BY: EPSYLON USA	DRAWN BY: LS
ISSUE DATE: 7/23/2014	ISSUE DATE:

DRAWING REVISION LOG

No.	Date:	Revision:
01	10/10/14	PER REVIEWER COMMENTS
02	12/10/14	PER REVIEWER COMMENTS
03	03/17/15	PER REVIEWER COMMENTS

ENGINEER:

PARAMOUNT
CONSULTING & ENGINEERING
CA#29244
6157 NW 167th STREET SUITE F15
MIAMI, FL 33015
Ph: (305) 698-0550
F: (305) 698-0558
www.paramountce.com

SIGNED AND SEALED DRAWINGS CHECKED FOR STRUCTURAL COMPLIANCE ONLY BY:
PARAMOUNT CONSULTING ENGINEERING, Inc.

CESAR SOTO, P.E.
No. 0059652
STATE OF FLORIDA
PROFESSIONAL ENGINEER

CESAR SOTO, P.E.
FL. REG. # 59652

DWG No.
EUSA MDC-005
SHEET 12 of 19

ANCHORAGE CAPACITY DATA/TABLES

SYSTEM 2 With GT-C or GT-D

DOOR WITH HEAVY INTERLOCKS

MAXIMUM ALLOWABLE DESIGN PRESSURE	W/ GT-C Pd= +120 PSF -120 PSF	W/ GT-D Pd= +120 PSF -120 PSF

TABLE 2-1. HEAD ANCHORS CAPACITY CHARTS

* SYSTEM 2: ALLOWABLE DESIGN PRESSURE (PSF) BASED ON ANCHORS AT HEAD								
48" wide by 108" tall panel with standard interlock / GLASS TYPE C and D								
	FOR 3/8" MAX. SHIM GAP				FOR 1/2" MAX. SHIM GAP			
BOLT	4 BOLTS		6 BOLTS		4 BOLTS		6 BOLTS	
TYPE	POS (+)	NEG (-)	POS (+)	NEG (-)	POS (+)	NEG (-)	POS (+)	NEG (-)
A	120.0	120.0	120.0	120.0	120.0	120.0	120.0	120.0
B	61.4	61.4	92.1	92.1	61.4	61.4	92.1	92.1
C	99.9	99.9	120.0	120.0	80.4	80.4	120.0	120.0
D	120.0	120.0	120.0	120.0	120.0	120.0	120.0	120.0

TABLE 2-2. SILL ANCHORS CAPACITY CHARTS

* SYSTEM 2: ALLOWABLE DESIGN PRESSURE (PSF) BASED ON ANCHORS AT SILL								
48" wide by 108" tall panel with standard interlock / GLASS TYPE C and D								
	FOR 3/8" MAX. SHIM GAP				FOR 1/2" MAX. SHIM GAP			
BOLT	4 BOLTS		6 BOLTS		4 BOLTS		6 BOLTS	
TYPE	POS (+)	NEG (-)	POS (+)	NEG (-)	POS (+)	NEG (-)	POS (+)	NEG (-)
A	120.0	120.0	120.0	120.0	120.0	120.0	120.0	120.0

TABLE 2-3. JAMB ANCHORS CAPACITY CHARTS

* SYSTEM 2: ALLOWABLE DESIGN PRESSURE (PSF) BASED ON FASTENERS AT JAMBS						
NOMINAL 48" X 108" PANELS (BOLT MAX SPACING = 14" O.C.) GLASS TYPES C and D						
BOLT	FOR 1/4" MAX. SHIM GAP		FOR 3/8" MAX. SHIM GAP		FOR 1/2" MAX. SHIM GAP	
TYPE	POS (+)	NEG (-)	POS (+)	NEG (-)	POS (+)	NEG (-)
J1	120.0	120.0	120.0	120.0	114.8	114.8
J2	108.9	108.9	108.9	108.9	108.9	108.9
J3	120.0	120.0	120.0	120.0	114.8	114.8
J4	120.0	120.0	112.8	112.8	89.8	89.8

* The above shown tables apply also to all sizes smaller than the nominal listed. It shall be responsibility of the contractor, architect or engineer of record to verify that all sizes are permitted by F.B.C. and meet all applicable egress, accessibility and FHA requirements, regulations and local ordinances.

TABLE USE INSTRUCTIONS

1. AFTER DETERMINING THAT SGD SYSTEM 2 IS BEING USED PER PROJECT DIMENSIONS AND MAXIMUM ALLOWABLE DESIGN PRESSURES ACCORDING TO SHEETS 05 THROUGH 07
2. DETERMINE APPLICABLE SUBSTRATES AT HEAD, SILL AND JAMBS PER PROJECT CONDITIONS. REFER TO SHEETS 9 AND 10 FOR ANCHOR TYPE SCHEDULE DEPENDING ON SUBSTRATE.
3. DETERMINE APPLICABLE SHIM GAPS AT HEAD, SILL AND JAMBS AND, USING TABLES 2-1 FOR HEAD, 2-2 FOR SILL AND 2-3 FOR JAMBS, SELECT ALLOWABLE DESIGN PRESSURES FOR EACH SYSTEM BASED ON ANCHOR (BOLT) TYPE AND SHIM GAP.
4. THE LOWEST ALLOWABLE DESIGN PRESSURE FROM ITEMS 1 THRU 3 ABOVE WILL CONTROL FOR THE ENTIRE SYSTEM.

TABLE USE EXAMPLE

EXAMPLE 2: A SYSTEM 2 FRAME CONNECTED TO METAL AT HEAD, TO CONCRETE AT SILL, TO CONCRETE AT JAMBS THRU WOOD BUCK, AND HAVING 1/2" SHIM GAP AT HEAD AND SILL, AND 3/8" SHIM GAP AT JAMBS:

DATA:
- SYSTEM: SYSTEM 2
- SUBSTRATE HEAD: METAL (ANCHOR D)
- SUBSTRATE SILL: CONCRETE (ANCHOR A)
- SUBSTRATE JAMBS: CONCRETE THRU WOOD BUCK (ANCHOR J2)
- SHIM GAP HEAD: 1/2" WITH CLUSTER OF FOUR (4) ANCHORS
- SHIM GAP SILL: 1/2" WITH CLUSTER OF FOUR (4) ANCHORS
- SHIM GAP JAMBS: 3/8"

RESULTS:
- MAX. ALLOWABLE DESIGN PRESSURE FOR SYSTEM 2 FRAME = + 120 PSF / -120 PSF (PER SHEETS 5, 6 AND 7)
- MAX. ALLOWABLE DESIGN PRESSURE PER HEAD CONNECTION = + 120 PSF / - 120 PSF (PER TABLE 2-1)
- MAX. ALLOWABLE DESIGN PRESSURE PER SILL CONNECTION = + 120 PSF / - 120 PSF (PER TABLE 2-2)
- MAX. ALLOWABLE DESIGN PRESSURE PER JAMB CONNECTION = + 108.9 PSF / -108.9 PSF (PER TABLE 2 -3)

THEREFORE MAX. ALLOWABLE DESIGN PRESSURE WITH LOWEST CONTROLLING VALUES FOR ENTIRE SYSTEM, Pd = + 108.9 PSF / -108.9 PSF

Approved as complying with the Florida Building Code
Date 4/30/15
NOA# 14-0306.02
Miami Dade Product Control
By Ichng I. Chen

GLOBAL PERFORMANCE WINDOWS, INC. DBA EPSYLON USA

1881 S.W. 3rd STREET
POMPANO BEACH, FL 33069
PH: 954.942.3322
FAX: 954.942.3215
www.epsylon.ca

PROJECT NAME
ALUMINUM SLIDING GLASS DOOR SERIES EUSA SD20. LARGE MISSILE IMPACT

SHEET TITLE
SYSTEM 2 WITH GT-C OR GT-D ANCHORAGE SCHEDULE

SCALE:

PREPARED BY: EPSYLON USA	DRAWN BY: LS
ISSUE DATE: 7/23/2014	ISSUE DATE:

DRAWING REVISION LOG

No.	Date.	Revision:
01	10/10/14	PER REVIEWER COMMENTS
02	12/10/14	PER REVIEWER COMMENTS
03	03/17/15	PER REVIEWER COMMENTS

ENGINEER:

PARAMOUNT
CONSULTING & ENGINEERING
CA#29244
6157 NW 167th STREET SUITE F15
MIAMI, FL 33015
Ph: (305) 698-0550
F: (305) 698-0558
www.paramountce.com

SIGNED AND SEALED DRAWINGS CHECKED FOR STRUCTURAL COMPLIANCE ONLY BY PARAMOUNT CONSULTING & ENGINEERING INC.

CESAR SOTO P.E. LICENSE NO. No. 0059652 STATE OF FLORIDA PROFESSIONAL ENGINEER

CESAR SOTO, P.E.
FL REG. #59652

DWG No.
EUSA MDC-005

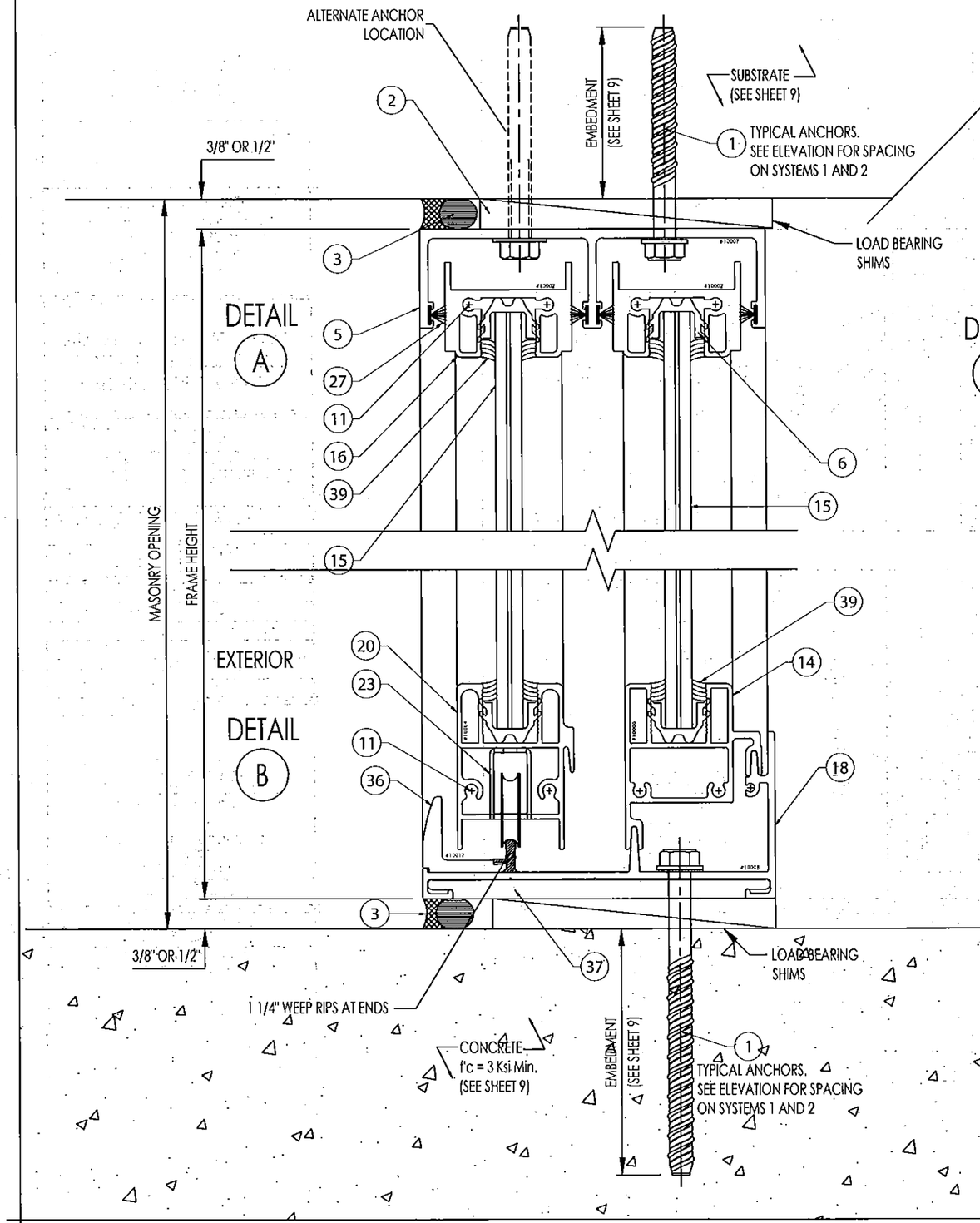

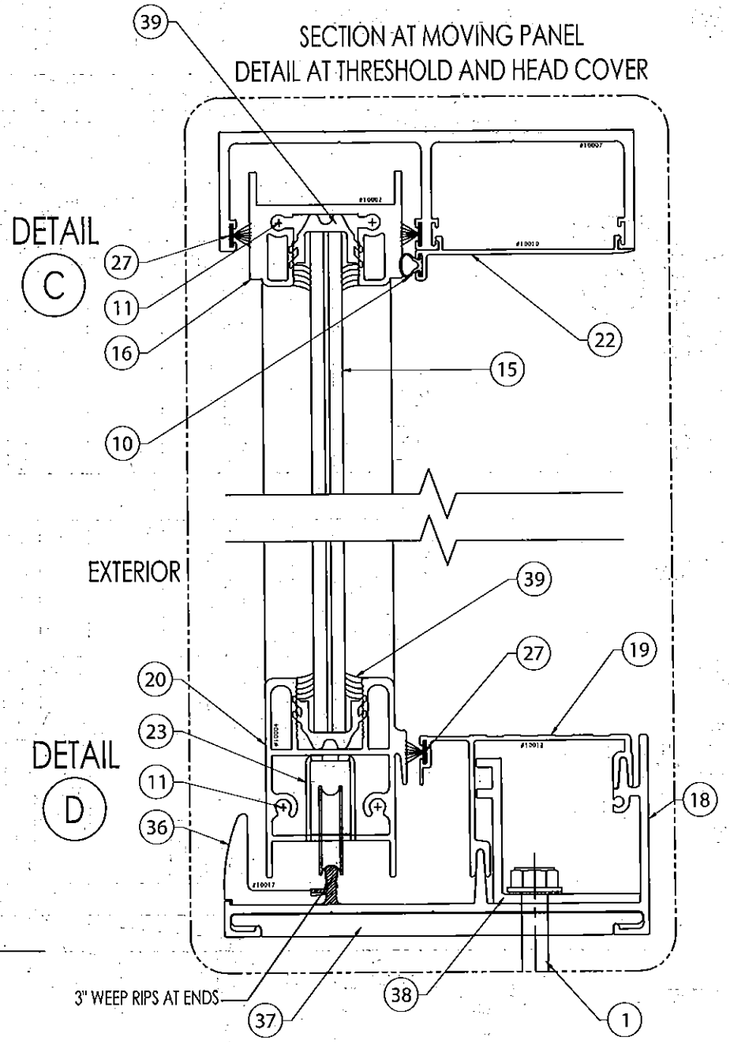

NOTE TO USER:
DETAILS APPLY FOR SYSTEMS 1 AND 2.
SYSTEM 1: REFER TO SHEETS 02 THRU 04 FOR MAXIMUM ALLOWABLE DESIGN PRESSURE AND GLASS OPTIONS.
SYSTEM 2: REFER TO SHEETS 05 THRU 07 FOR MAXIMUM ALLOWABLE DESIGN PRESSURE AND GLASS OPTIONS.

SEALANTS NOTE:
SEALANT TO BE INSTALLED AT ALL PANEL AND FRAME CORNERS, AT FIXED PANEL TO FRAME SILL FLANGE ON INTERIOR, FRAME SILL AND FIRST FRAME JAMB BOTTOM INSTALLATION FASTENERS, THRESHOLD ADAPTOR TO FRAME SILL FLANGE, AND 7" VERTICALLY AT JOINT BETWEEN FIXED PANEL AND FRAME JAMB

Approved as complying with the Florida Building Code
Date 4/30/15
NOA# 14-0806.02
Miami Dade Product Control
By Ishaq I. Chand

GLOBAL PERFORMANCE WINDOWS, INC.
DBA EPSYLON USA

1881 S.W. 3rd STREET
POMPANO BEACH, FL 33069
PH: 954.942.3322
FAX: 954.942.3215
www.epsylon.ca

PROJECT NAME
ALUMINUM SLIDING GLASS DOOR SERIES EUSA SD20. LARGE MISSILE IMPACT

SHEET TITLE
INSTALLATION DETAILS
SCALE:

PREPARED BY: EPSYLON USA	DRAWN BY: L.S
ISSUE DATE: 7/23/2014	ISSUE DATE: -

DRAWING REVISION LOG

No.	Date:	Revision:
01	10/10/14	PER REVIEWER COMMENTS
02	12/10/14	PER REVIEWER COMMENTS
03	03/17/15	PER REVIEWER COMMENTS

ENGINEER:
PARAMOUNT
CONSULTING & ENGINEERING
CA#29244
6157 NW 167th STREET SUITE F15
MIAMI, FL 33015
Ph: (305) 698-0550
F: (305) 698-0558
www.paramountce.com

SIGNED AND SEALED DRAWINGS CHECKED FOR STRUCTURAL COMPLIANCE ONLY BY
PARAMOUNT CONSULTING AND ENGINEERING LLC

CESAR SOTO
LICENSE
No. 0059652
STATE OF FLORIDA
PROFESSIONAL ENGINEER
CESAR SOTO, P.E.
FL. REG. # 59652

DWG No.
EUSA MDC-005
SHEET 14 of 19

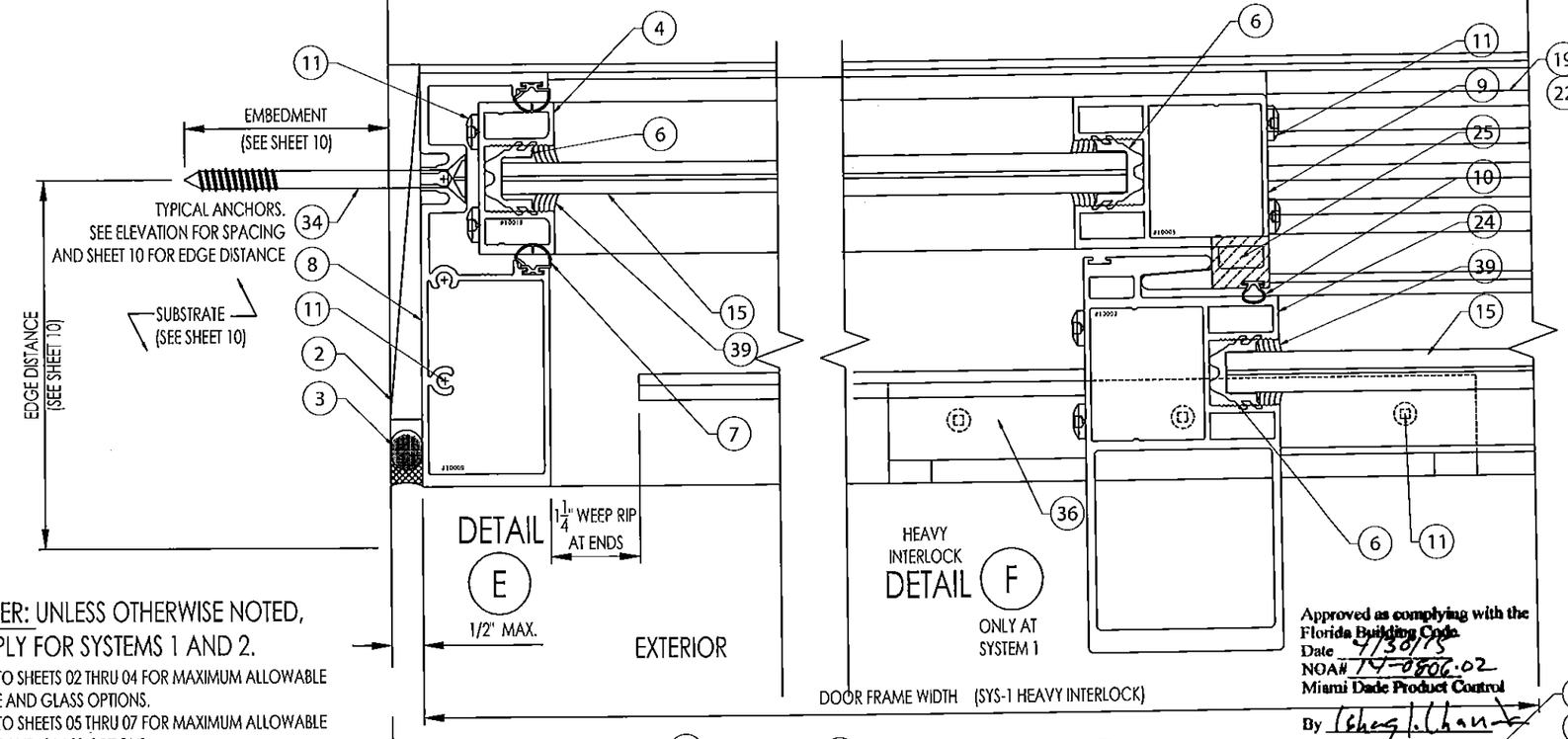

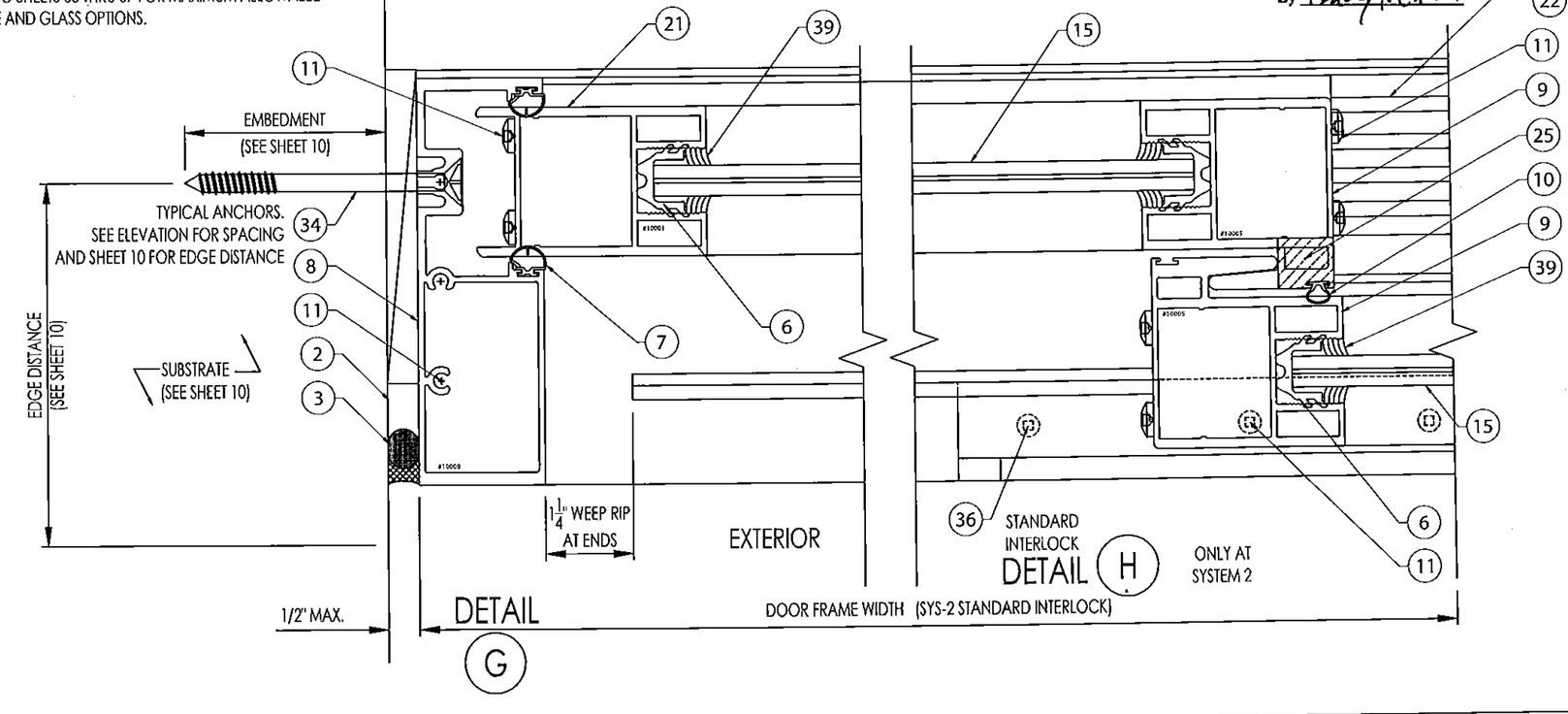

→ NOTE TO USER: UNLESS OTHERWISE NOTED, DETAILS APPLY FOR SYSTEMS 1 AND 2.

SYSTEM 1: REFER TO SHEETS 02 THRU 04 FOR MAXIMUM ALLOWABLE DESIGN PRESSURE AND GLASS OPTIONS.
SYSTEM 2: REFER TO SHEETS 05 THRU 07 FOR MAXIMUM ALLOWABLE DESIGN PRESSURE AND GLASS OPTIONS.

Approved as complying with the Florida Building Code
Date 7/30/15
NOA# 14-0806.02
Miami Dade Product Control
By Cheng J. Chan

GLOBAL PERFORMANCE WINDOWS, INC.
DBA EPSYLON USA

1881 S.W. 3rd STREET
POMPANO BEACH, FL 33069
PH: 954.942.3322
FAX: 954.942.3215
www.epsylon.ca

PROJECT NAME
ALUMINUM SLIDING GLASS DOOR SERIES EUSA SD20. LARGE MISSILE IMPACT

SHEET TITLE
INSTALLATION DETAILS

SCALE:

PREPARED BY: EPSYLON USA	DRAWN BY: L.S
ISSUE DATE: 7/23/2014	ISSUE DATE:

DRAWING REVISION LOG

No.	Date:	Revision:
01	10/10/14	PER REVIEWER COMMENTS
02	12/10/14	PER REVIEWER COMMENTS
03	03/17/15	PER REVIEWER COMMENTS

ENGINEER:

PARAMOUNT
CONSULTING & ENGINEERING
CA#29244
6157 NW 167th STREET SUITE F15
MIAMI, FL 33015
Ph: (305) 698-0550
F: (305) 698-0558
www.paramountce.com

SIGNED AND SEALED DRAWINGS CHECKED FOR STRUCTURAL COMPLIANCE ONLY, BY:
PARAMOUNT CONSULTING AND ENGINEERING, LLC

CESAR SOTO LICENSE No. 0060652 STATE OF FLORIDA PROFESSIONAL ENGINEER
Cesar Soto, P.E.
FL REG. # 60652

DWG No.
EUSA MDC-005
SHEET 15 of 19

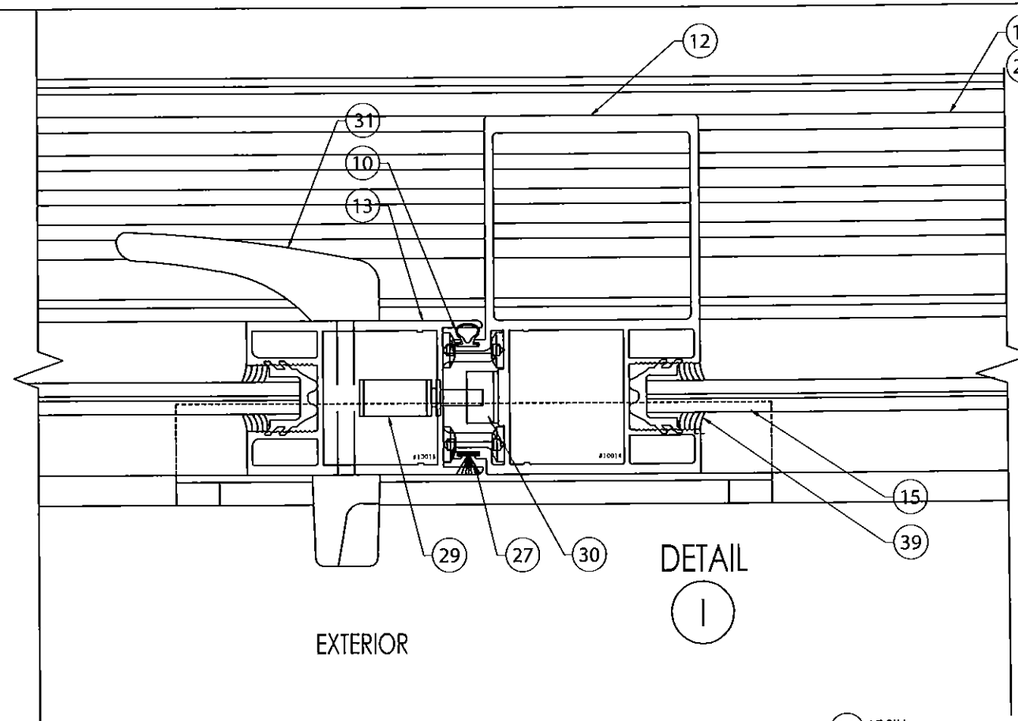

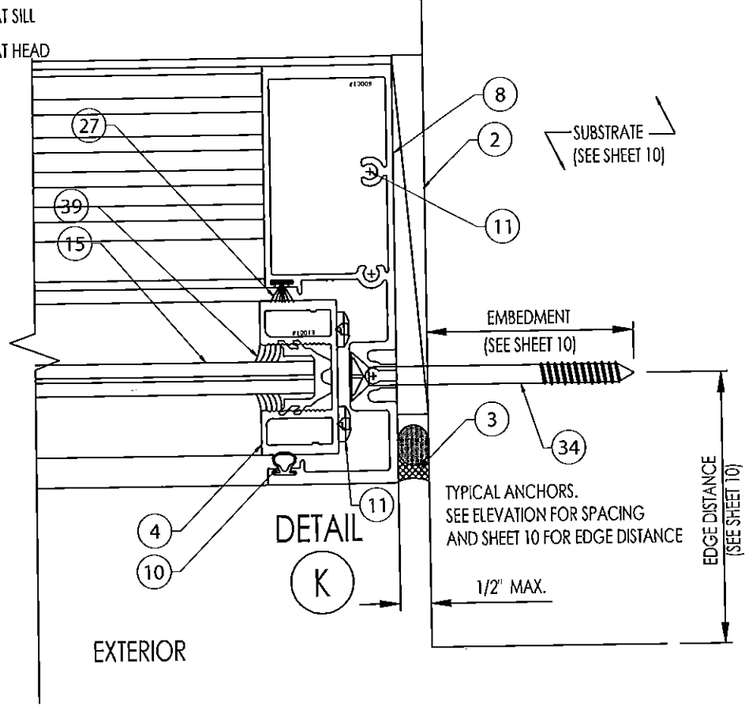

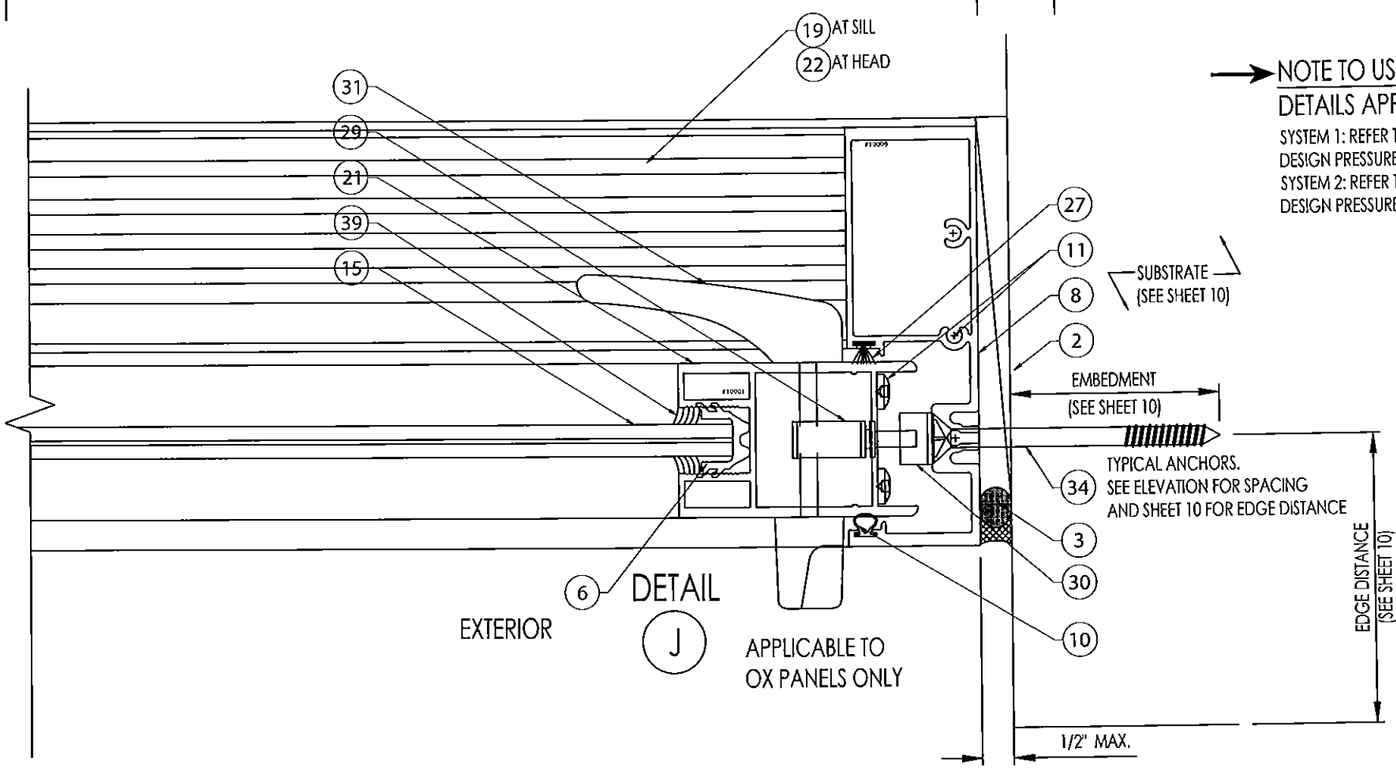

NOTE TO USER:

DETAILS APPLY FOR SYSTEMS 1 AND 2.

SYSTEM 1: REFER TO SHEETS 02 THRU 04 FOR MAXIMUM ALLOWABLE DESIGN PRESSURE AND GLASS OPTIONS.

SYSTEM 2: REFER TO SHEETS 05 THRU 07 FOR MAXIMUM ALLOWABLE DESIGN PRESSURE AND GLASS OPTIONS.

Approved as complying with the Florida Building Code
Date 4/30/15
NOA# 14-0806.02
Miami Dade Product Control
By [signature]

GLOBAL PERFORMANCE WINDOWS, INC.
DBA EPSYLON USA

1881 S.W. 3rd STREET
POMPANO BEACH, FL 33069
PH: 954.942.3322
FAX: 954.942.3215
www.epsylon.ca

PROJECT NAME

ALUMINUM SLIDING GLASS DOOR SERIES EUSA SD20. LARGE MISSILE IMPACT

SHEET TITLE

INSTALLATION DETAILS

SCALE:

PREPARED BY: EPSYLON USA	DRAWN BY: L.S
ISSUE DATE: 7/23/2014	ISSUE DATE: -

DRAWING REVISION LOG

No.	Date:	Revision:
01	10/10/14	PER REVIEWER COMMENTS
02	12/10/14	PER REVIEWER COMMENTS
03	03/17/15	PER REVIEWER COMMENTS

ENGINEER:

PARAMOUNT
CONSULTING & ENGINEERING
CA#29244
6157 NW 167th STREET SUITE F15
MIAMI, FL 33015
Ph: (305) 698-0550
F: (305) 698-0558
www.paramountce.com

SIGNED AND SEALED DRAWINGS CHECKED FOR STRUCTURAL COMPLIANCE ONLY BY:

PARAMOUNT CONSULTING AND ENGINEERING, LLC

CESAR SOTO, P.E.
FL. REG. # 69052

CESAR SOTO LICENSE No. 0059652 STATE OF FLORIDA PROFESSIONAL ENGINEER

DWG No.

EUSA MDC-005

SHEET 16 of 19

BILL OF MATERIALS

ITEM	PAT NUMBER, DESCRIPTION	MATERIAL	QUANTITY / SPACING	MANUFACTURER
1	HEAD AND SILL ANCHOR. REFER TO ANCHOR SCHEDULES FOR SYSTEMS 1 AND 2	CARBON STEEL	REFER TO ELEVATIONS	SEE SCHEDULE
2	LOAD BEARING SHIM	-	AS REQUIRED	
3	SILICONE SEALANT AND BACKER ROD.	-	-	
4	10013, FIXED STILE	6063-T6	AS REQUIRED	EPSYLON
5	10007, FRAME HEAD	6063-T6	AS REQUIRED	EPSYLON
6	91005, TREMCO GLAZING GASKET FOR 9/16" THK. GLASS AT SYSTEMS 1 AND 2 TR20115E	EPDM, DURO 60	SEE PAGES 4, 7 AND 8 6" LG. PIECES	TREMCO
7	91003, TREMCO VINYL	-	-	TREMCO
8	10009, FRAME JAMB	6063-T6	AS REQUIRED	EPSYLON
9	10005, INTERLOCK STILE	6063-T6 AT STIFF OPTION (SYSTEM 1) 6005-T5 AT STD OPTION (SYSTEM 2)	AS REQUIRED	EPSYLON
10	91002, TREMCO VYNIL	-	-	TREMCO
11	1/4-20 X 1" LG. SMS ST/ST	304 ST/ST	AS REQUIRED	
12	10014, ASTRAGAL-MEETING STILE	6063-T6	AS REQUIRED	EPSYLON
13	10015, LOCK-MEETING STILE	6063T-6	AS REQUIRED	EPSYLON
14	10006, FIXED BOTTOM RAIL	6063-T6	AS REQUIRED	EPSYLON
15	LAMINATED GLASS. REFER TO GT-C & GT-D (SYSTEM 1) OR GT-C & GT-D (SYSTEM 2)	-	-	
16	10002, TOP RAIL	6063-T6	AS REQUIRED	EPSYLON
18	10008, FRAME SILL	6063-T6	AS REQUIRED	EPSYLON
19	10012, THRESHOLD SNAP TRACK ADAPTER (BETWEEN FIXED PANEL)	6063-T6	AS REQUIRED	EPSYLON
20	10004, MOVING BOTTOM RAIL	6063-T6	AS REQUIRED	EPSYLON
21	10001, JAMB LOCK STILE	6063-T6	AS REQUIRED	EPSYLON
22	10010, HEAD SNAP-ON ADAPTER (BETWEEN FIXED PANEL)	6063-T6	AS REQUIRED	EPSYLON
23	39.13.00.202, TRUTH TANDEM ST/ST ROLLER ASSEMBLY	ST/ST	2 / MOV. PANEL	
24	10003, STIFF INTERLOCK AT SYSTEM 1 ONLY	6063-T6	AS REQUIRED	
25	91006, WTSP GASKET X 1/2" LG.	EPDM, DURO 80	-	
27	W71435NK0000, ULTRAFAB WTSP PILE	-	-	
29	22063, TRUTH MORTISE LOCK. 3 POINT LOCK	-	-	TRUTH
30	22439, TRUTH KEEPER	-	-	TRUTH
31	TRUTH HANDLE	-	-	TRUTH
34	JAMB ANCHORS. REFER TO ANCHOR SCHEDULES ON SHEET 10	CARBON STEEL	REFER TO ELEVATIONS	
36	10017, ALUMINUM RETAINER ANGLE	6063-T6	AT INTERLOCKS AND MEETING PANELS	EPSYLON
37	10028, ALUMINUM SHEAR BAR	6063-T6	AT SILL ANCHOR CLUSTERS.	EPSYLON
38	10027, THRESHOLD REINFORCEMENT	6063-T6	9" LG. AT ASTRAGAL ONLY ON DOOR FRAMES HIGHER THAN 9'	
39	SILICONE SEALANT, TREMCO PROGLAZE II OR GE SSG 4700	-	-	

Approved as complying with the Florida Building Code
Date 4/30/15
NOA# 14-0806.02
Miami Dade Product Control
By

GLOBAL PERFORMANCE WINDOWS, INC.
DBA EPSYLON USA

1881 S.W. 3rd STREET
POMPANO BEACH, FL 33069
PH: 954.942.3322
FAX: 954.942.3215
www.epsylon.ca

PROJECT NAME

ALUMINUM SLIDING GLASS DOOR SERIES EUSA SD20. LARGE MISSILE IMPACT

SHEET TITLE

BILL OF MATERIALS

SCALE:

PREPARED BY:	DRAWN BY:
EPSYLON USA	LS
ISSUE DATE: 7/23/2014	ISSUE DATE:

DRAWING REVISION LOG

No.	Date:	Revision:
01	10/10/14	PER REVIEWER COMMENTS
02	12/10/14	PER REVIEWER COMMENTS
03	03/17/15	PER REVIEWER COMMENTS

ENGINEER:

PARAMOUNT
CONSULTING & ENGINEERING
CA#29244
6157 NW 167th STREET SUITE F15
MIAMI, FL 33015
Ph: (305) 698-0550
F: (305) 698-0558
www.paramountce.com

SIGNED AND SEALED DRAWINGS CHECKED FOR STRUCTURAL COMPLIANCE ONLY BY PARAMOUNT CONSULTING AND ENGINEERING, LLC

OSCAR SOTO LICENSE No. 0058052 STATE OF FLORIDA PROFESSIONAL ENGINEER

OSCAR SOTO, P.E.
FL. REG. # 58052

DWG No.

EUSA MDC-005

ALUMINUM EXTRUSION DIMENSIONS

Approved as complying with the Florida Building Code
Date 4/30/15
NOA# 14-0506.02
Miami Dade Product Control
By Ishwar L. Chawla

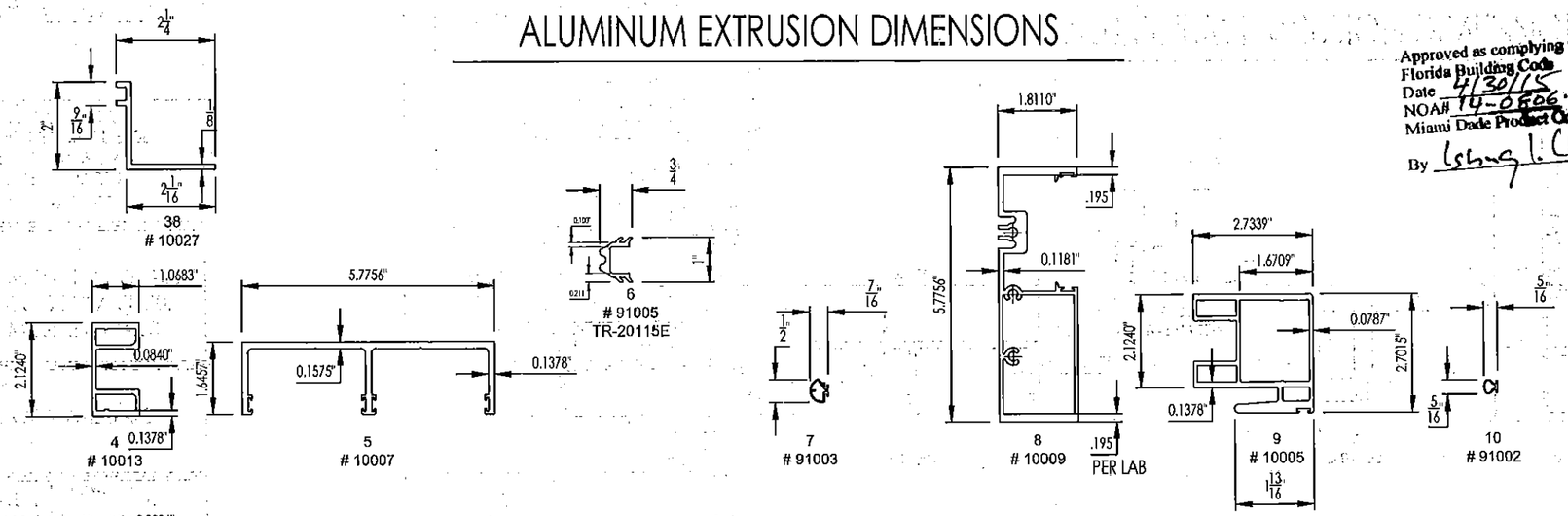

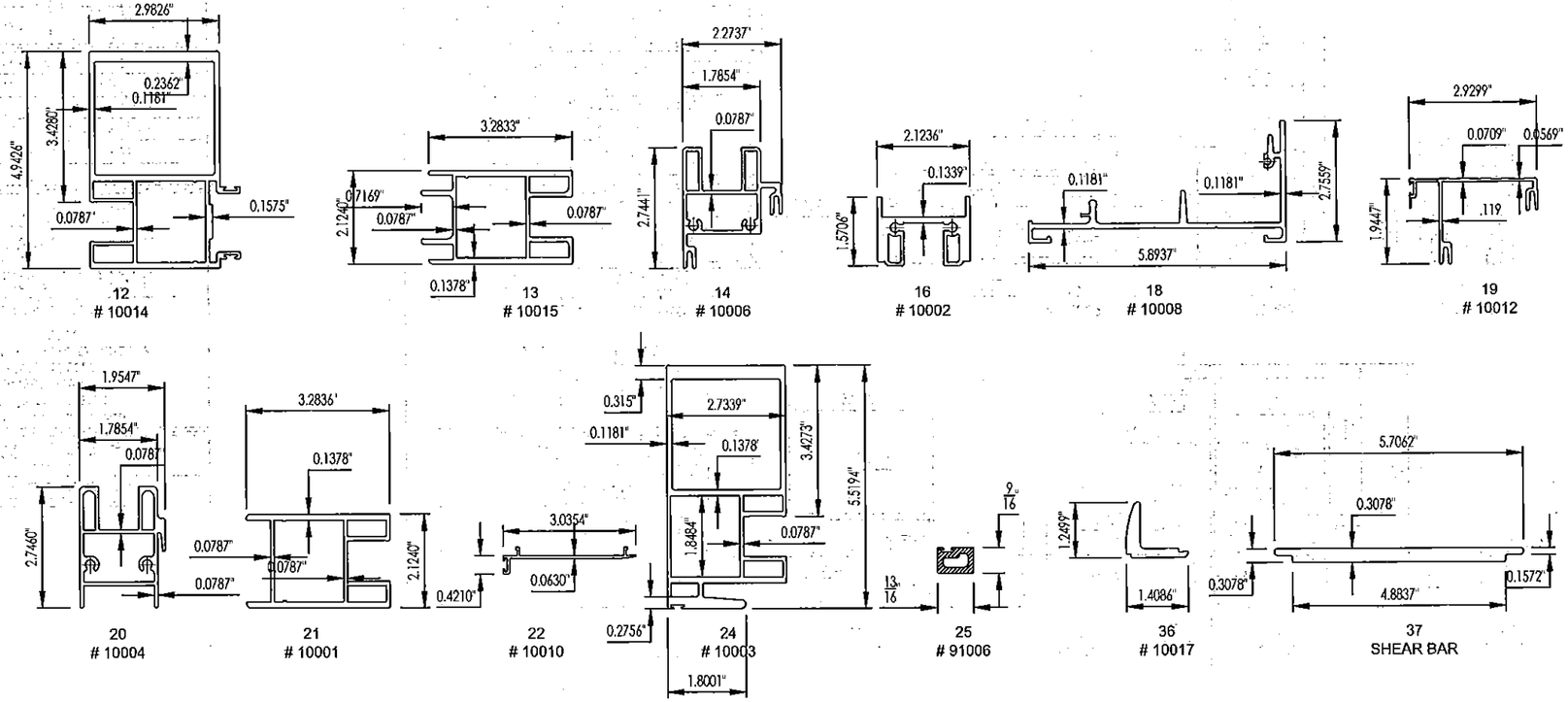

GLOBAL PERFORMANCE WINDOWS, INC.
DBA EPSYLON USA

1881 S.W. 3rd STREET
POMPANO BEACH, FL 33069
PH: 954.942.3322
FAX: 954.942.3215
www.epsylon.ca

PROJECT NAME
ALUMINUM SLIDING GLASS DOOR SERIES EUSA SD20. LARGE MISSILE IMPACT

SHEET TITLE
ALUMIMUM PARTS

SCALE: 4" = 1'-0"

PREPARED BY: EPSYLON USA	DRAWN BY: L.S
ISSUE DATE: 7/23/2014	ISSUE DATE: -

DRAWING REVISION LOG

No.	Date:	Revision:
01	10/10/14	PER REVIEWER COMMENTS
02	12/10/14	PER REVIEWER COMMENTS
03	03/17/15	PER REVIEWER COMMENTS

ENGINEER:

PARAMOUNT
CONSULTING & ENGINEERING
CA#29244
6157 NW 167th STREET SUITE F15
MIAMI, FL 33015
Ph: (305) 698-0550
F: (305) 698-0558
www.paramountce.com

SIGNED AND SEALED DRAWINGS CHECKED FOR STRUCTURAL COMPLIANCE ONLY BY: PARAMOUNT CONSULTING AND ENGINEERING, LLC.

STATE OF FLORIDA PROFESSIONAL ENGINEER No. 0059652 CESAR SOTO, P.E.

CESAR SOTO, P.E.
FL. REG. # 59652

DWG No.
EUSA MDC-005
SHEET 18 of 19

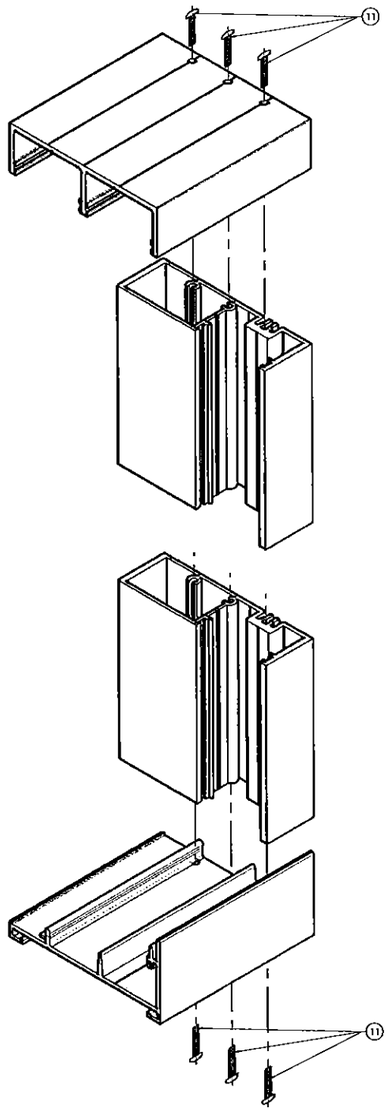

FRAME CORNER ASSEMBLY
TOP AND BOTTOM

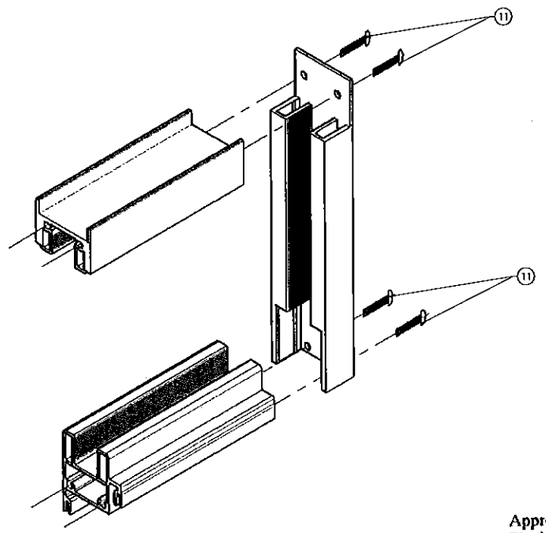

PANEL CORNER ASSEMBLY
TOP AND BOTTOM

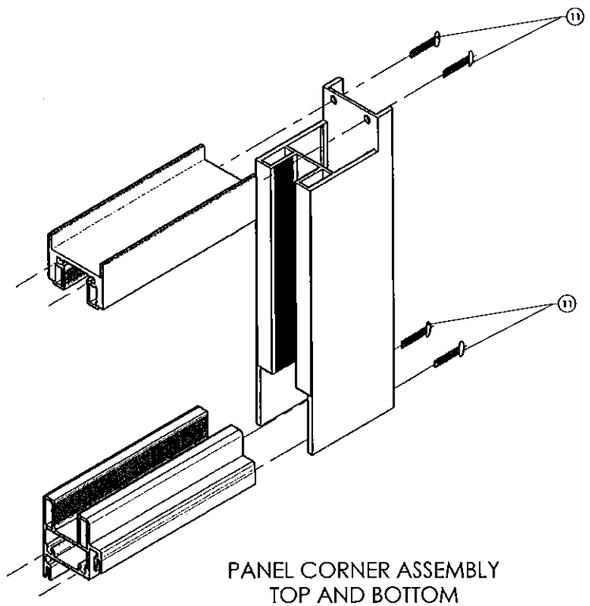

PANEL CORNER ASSEMBLY
TOP AND BOTTOM

Approved as complying with the
Florida Building Code
Date APR 30 2015
NOA# 14-0806.02
Miami Dade Product Control
By

GLOBAL PERFORMANCE WINDOWS, INC.
DBA EPSYLON USA

2115 S.W. 2ND STREET
POMPANO BEACH, FL 33069
PH: 954.942.3322
FAX: 954.942.3215
www.epsylon.ca

PROJECT NAME

ALUMINUM SLIDING GLASS DOOR SERIES EUSA SD20. LARGE MISSILE IMPACT

SHEET TITLE

ISOMETRIC DRAWINGS

SCALE:

PREPARED BY: EPSYLON USA	DRAWN BY: LS
ISSUE DATE: 7/10/2014	ISSUE DATE: -

DRAWING REVISION LOG

No.	Date:	Revision:

ENGINEER:

PARAMOUNT
CONSULTING & ENGINEERING
CA#29244
6157 NW 167th STREET SUITE F15
MIAMI, FL 33015
Ph: (305) 698-0550
F: (305) 698-0588
www.paramountce.com

SIGNED AND SEALED DRAWINGS CHECKED FOR STRUCTURAL COMPLIANCE ONLY, BY:
PARAMOUNT CONSULTING AND ENGINEERING, LLC

CESAR I. SOTO
LICENSE
No. 0059652
STATE OF FLORIDA
PROFESSIONAL ENGINEER

CESAR SOTO, P.E.
FL. REG. # 59652

DWG No.

EUSA MDC-005