MIAMI-DADE COUNTY, FLORIDA
PRODUCT CONTROL SECTION
11805 SW 26 Street, Room 208
Miami, Florida 33175–2474
T (786) 315–2590 F (786) 315–2599
www.miamidade.gov/economy

DEPARTMENT OF REGULATORY AND ECONOMIC RESOURCES (RER)
BOARD AND CODE ADMINISTRATION DIVISION

NOTICE OF ACCEPTANCE (NOA)

Tecnoglass, LLC
5220 NW 72nd Avenue, Bay No. 4
Miami, FL 33166

SCOPE:

This NOA is being issued under the applicable rules and regulations governing the use of construction materials. The documentation submitted has been reviewed and accepted by Miami–Dade County RER – Product Control Section to be used in Miami–Dade County and other areas where allowed by the Authority Having Jurisdiction (AHJ).

This NOA shall not be valid after the expiration date stated below. The Miami–Dade County Product Control Section (In Miami–Dade County) and/ or the AHJ (in areas other than Miami–Dade County) reserve the right to have this product or material tested for quality assurance purposes. If this product or material fails to perform in the accepted manner, the manufacturer will incur the expense of such testing and the AHJ may immediately revoke, modify, or suspend the use of such product or material within their jurisdiction. RER reserves the right to revoke this acceptance, if it is determined by Miami–Dade County Product Control Section that this product or material fails to meet the requirements of the applicable building code.

This product is approved as described herein, and has been designed to comply with the Florida Building Code, including the High Velocity Hurricane Zone.

DESCRIPTION: Series "2400 ST" Aluminum Sliding Glass Door – S.M.I.

APPROVAL DOCUMENT: Drawing No. **W01–54**, titled "Series–2400ST Alum. Sld. Glass Door (S.M.I.)", sheets 1 through 10 of 10, dated 08/17/01 with revision "O" dated 08/01/14, prepared by Al–Farooq Corporation, signed and sealed by Javad Ahmad, P. E., bearing the Miami–Dade County Product Control Revision stamp with the Notice of Acceptance number and Expiration date by the Miami–Dade County Product Control Section.

MISSILE IMPACT RATING: Small Missile Impact Resistant.

LABELING: Each unit shall bear a permanent label with the manufacturer's name or logo, **Barranquilla, Colombia S.A.**, series and following statement: "Miami–Dade County Product Control Approved" unless otherwise noted herein.

RENEWAL of this NOA shall be considered after a renewal application has been filed and there has been no change in the applicable building code negatively affecting the performance of this product.

TERMINATION of this NOA will occur after the expiration date or if there has been a revision or change in the materials, use, and/or manufacture of the product or process. Misuse of this NOA as an endorsement of any product, for sales, advertising or any other purposes shall automatically terminate this NOA. Failure to comply with any section of this NOA shall be cause for termination and removal of NOA.

ADVERTISEMENT: The NOA number preceded by the words Miami–Dade County, Florida, and followed by the expiration date may be displayed in advertising literature. If any portion of the NOA is displayed, then it shall be done in its entirety.

INSPECTION: A copy of this entire NOA shall be provided to the user by the manufacturer or its distributors and shall be available for inspection at the job site at the request of the Building Official.

This NOA **revises NOA No. 12–0202.03** and consists of this page 1, evidence pages E–1, E–2 and E–3, as well as approval document mentioned above.

The submitted documentation was reviewed by **Jaime D. Gascon, P. E.**

MIAMI-DADE COUNTY APPROVED

J. Gascon 8/28/14

NOTICE OF ACCEPTANCE: EVIDENCE SUBMITTED

A. DRAWINGS

1. Manufacturer's die drawings and sections.
   (Submitted under previous NOA's No.'s 08–1119.07, 07–1019.01, 06–0327.05 and 01–0927.04)
2. Drawing No. **W01–54**, titled "Series–2400ST Alum. Sld. Glass Door (S.M.I.)", sheets 1 through 10 of 10, dated 08/17/01 with revision "**0**" dated 08/01/14, prepared by Al–Farooq Corporation, signed and sealed by Javad Ahmad, P. E.

B. TESTS

1. Test reports on:
   1) Air Infiltration Test, per FBC, TAS 202–94
   2) Uniform Static Air Pressure Test, Loading per FBC TAS 202–94
   3) Water Resistance Test, per FBC, TAS 202–94
   4) Large Missile Impact Test per FBC, TAS 201–94
   5) Cyclic Wind Pressure Loading per FBC, TAS 203–94
   6) Forced Entry Test, Type "A" sliding door, Grade 10, per ASTM F 842–04 and per FBC 2411 3.2.1, TAS 202–94

   along with marked–up drawings and installation diagram of an aluminum sliding glass door, prepared by Fenestration Testing Laboratory, Inc., Test Reports No.'s **FTL–5723**, dated 10/01/08, **FTL–5677**, dated 09/04/08 and **FTL–5118**, dated 08/28/08, all signed and sealed by Carlos S. Rionda, P. E.
   (Submitted under previous NOA No. 08–1119.07)
2. Test reports on:
   1) Air Infiltration Test, per FBC, TAS 202–94;
   2) Uniform Static Air Pressure Test, Loading per FBC TAS 202–94;
   3) Water Resistance Test, per FBC, TAS 202–94;
   4) Small Missile Impact Test per FBC, TAS 201–94;
   5) Cyclic Wind Pressure Loading per FBC, TAS 203–94;
   6) Forced Entry Test, Type "A" sliding door, Grade 10, per ASTM F 842–04 and per FBC 2411 3.2.1, TAS 202–94

   along with marked–up drawings and installation diagram of an aluminum sliding glass door, prepared by Fenestration Testing Laboratory, Inc., Test Report No. **FTL–5108**, dated 02/02/07, signed and sealed by Michael Wenzel, P. E.
   (Submitted under NOA No. 07–1019.01)
3. Test report on:
   1) Uniform Static Air Pressure Test, Loading per FBC TAS 202–94,
   2) Small Missile Impact Test per FBC, TAS 201–94,
   3) Cyclic Wind Pressure Loading per FBC, TAS 203–94,

   along with marked–up drawings and installation diagram of an aluminum sliding glass door, prepared by Fenestration Testing Laboratory, Inc., Test Report No. **FTL–4615**, dated 06/16/05, signed and sealed by Edmundo J. Largaespada, P. E.
   (Submitted under NOA No. 06–0327.05)

Jaime D. Gascón, P. E.
Product Control Section Supervisor
NOA No. 14–0807.15
Expiration Date: February 07, 2017
Approval Date: September 04, 2014

NOTICE OF ACCEPTANCE: EVIDENCE SUBMITTED

B. TESTS (CONTINUED)

4. Test reports on:
1) Air Infiltration Test, per FBC, TAS 202–94,
2) Uniform Static Air Pressure Test, Loading per FBC, TAS 202–94,
3) Water Resistance Test, per FBC, TAS 202–94,
4) Small Missile Impact Test per FBC, TAS 201–94,
5) Cyclic Wind Pressure Loading per FBC, TAS 203–94,
6) Forced Entry Test, Type "A" sliding door, Grade 10, per ASTM F 842–04 and per FBC 2411 3.2.1, TAS 202–94

along with marked–up drawings and installation diagram of an aluminum sliding glass door, prepared by Fenestration Testing Laboratory, Inc., Test Reports No.'s **FTL–4895**, dated 08/23/06, **FTL–4993**, dated 07/19/06 and **FTL–4615**, dated 06/16/05, all signed and sealed by Edmundo J. Largaespada, P. E.
(Submitted under NOA No. 07–0124.07)

5. Test report on:
1) Air Infiltration Test, per FBC, TAS 202–94;
2) Uniform Static Air Pressure Test, Loading per FBC, TAS 202–94;
3) Water Resistance Test, per FBC, TAS 202–94;
4) Large Missile Impact Test per FBC, TAS 201–94;
5) Small Missile Impact Test per FBC, TAS 201–94;
6) Cyclic Wind Pressure Loading per FBC, TAS 203–94;
7) Forced Entry Test, Type "A" sliding door, Grade 10, per ASTM F 842–04 and per FBC 2411 3.2.1, TAS 202–94

along with marked–up drawings and installation diagram of an aluminum sliding glass door, prepared by Fenestration Testing Laboratory, Inc., Test Report No. **FTL–3106**, dated 08/03/01, signed and sealed by Luis Figueredo, P. E.
(Submitted under NOA No. 01–0927.04)

C. CALCULATIONS

1. Anchor verification calculations and structural analysis, complying with **FBC–2010**, prepared by Al–Farooq Corporation, dated 11/16/11, signed and sealed by Javad Ahmad, P. E. ***(Submitted under previous NOA No. 12–0202.03)***

2. Glazing complies with ASTM E1300–04

D. QUALITY ASSURANCE

1. Miami–Dade Department of Regulatory and Economic Resources (RER).

E. MATERIAL CERTIFICATIONS

1. Notice of Acceptance No. **11–0624.02** issued to E.I. DuPont DeNemours & Co., Inc. for their "**DuPont Sentry Glass® Interlayer**" dated 08/25/11, expiring on 01/14/17.

2. Notice of Acceptance No. **13–0129.27** issued to **E.I. DuPont DeNemours & Co., Inc.** for their "**DuPont Butacite® PVB Interlayer**" dated 04/11/13, expiring on 12/11/16.

Jaime D. Gascon, P. E.
Product Control Section Supervisor
NOA No. 14–0807.15
Expiration Date: February 07, 2017
Approval Date: September 04, 2014

NOTICE OF ACCEPTANCE: EVIDENCE SUBMITTED

E. STATEMENTS

1. Statement letter of no financial interest, conformance and compliance with the **FBC–2010**, dated 08/05/14, signed and sealed by Javad Ahmad, P. E.
2. Asset purchase agreement dated 06/19/14, signed by Mr. Raul Casares, for and on behalf of R.C. Aluminum Industries, Inc. and Mr. José M. Daes, for and on behalf of Tecnoglass, LLC.
3. Statement letter dated 07/15/14, issued by R.C. Aluminum Industries, Inc. of sales of asset and relinquishing of all rights of NOA No. **12–0202.03**, signed by Raul Casares, for and on behalf of R.C. Aluminum Industries, Inc.
4. Department of State Certification of **TECNOGLASS, LLC** as a limited liability company, active and organized under the laws of the State of Florida, dated 03/03/14 and signed by Ken Detzner, Secretary of State.
5. Statement letter of no financial interest, conformance to and compliance with the **FBC–2007** and **FBC–2010**, dated 10/25/11, signed and sealed by Javad Ahmad, P. E.
   (Submitted under previous NOA No. 12–0202.03)
6. Laboratory compliance letters for Test Reports No.'s **FTL–5723**, dated 10/01/08, **FTL–5677**, dated 09/04/08 and **FTL–5118**, dated 08/28/08, issued by Fenestration Testing Laboratory, Inc., both signed and sealed by Carlos S. Rionda, P. E.
   (Submitted under previous NOA No. 08–1119.07)
7. Proposal from 03/17/08, issued by Product Control, dated 06/09/08, signed by Jaime D. Gascon, P. E.
   (Submitted under NOA No. 08–1119.07)
8. Laboratory compliance letters for Test Report No. **FTL–5108**, issued by Fenestration Testing Laboratory, Inc., dated 02/02/07, signed and sealed by Michael Wenzel, P. E.
   (Submitted under NOA No. 07–1019.01)
9. Laboratory compliance letters for Test Reports No.'s **FTL–4895**, dated 08/23/06, **FTL–4993**, dated 07/19/06 and **FTL–4615**, dated 06/16/05, issued by Fenestration Testing Laboratory, Inc., all signed and sealed by Edmundo Largaespada, P. E.
   (Submitted under previous NOA No. 07–0124.07 and 06–0327.05)
10. Laboratory compliance letters for Test Report No. **FTL–3106**, issued by Fenestration Testing Laboratory, Inc., dated 08/03/01, signed and sealed by Luis Figueredo, P. E.
    (Submitted under previous NOA No. 01–0927.04)

F. OTHERS

1. Notice of Acceptance No. **12–0202.03**, issued to R. C. Aluminum Industries, Inc. for their Series "**2400ST Aluminum Sliding Glass Door – S.M.I.**", approved on 05/17/12 and expiring on 02/07/17.

Jaime D. Gascon, P. E.
Product Control Section Supervisor
NOA No. 14–0807.15
Expiration Date: February 07, 2017
Approval Date: September 04, 2014

DAYLITE OPENINGS:

DLO WIDTH = $\frac{\text{FRAME WIDTH}}{\text{NO. OF PANELS}}$ – 3.937

DLO HEIGHT = FRAME HEIGHT – 5.500

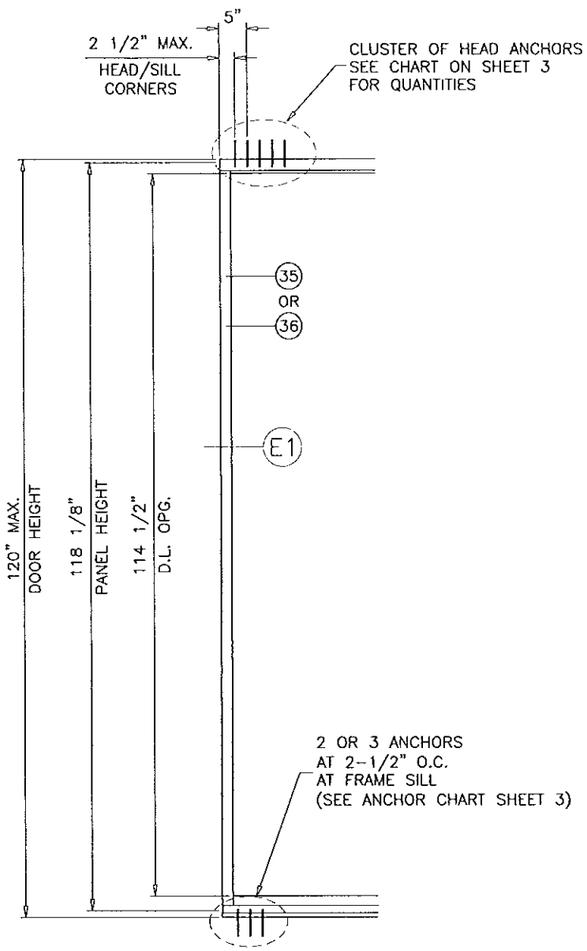

JAMB OPTION W/O ANCHORS

(120" MAX. DOOR HEIGHT USING ITEMS #35 OR #36)

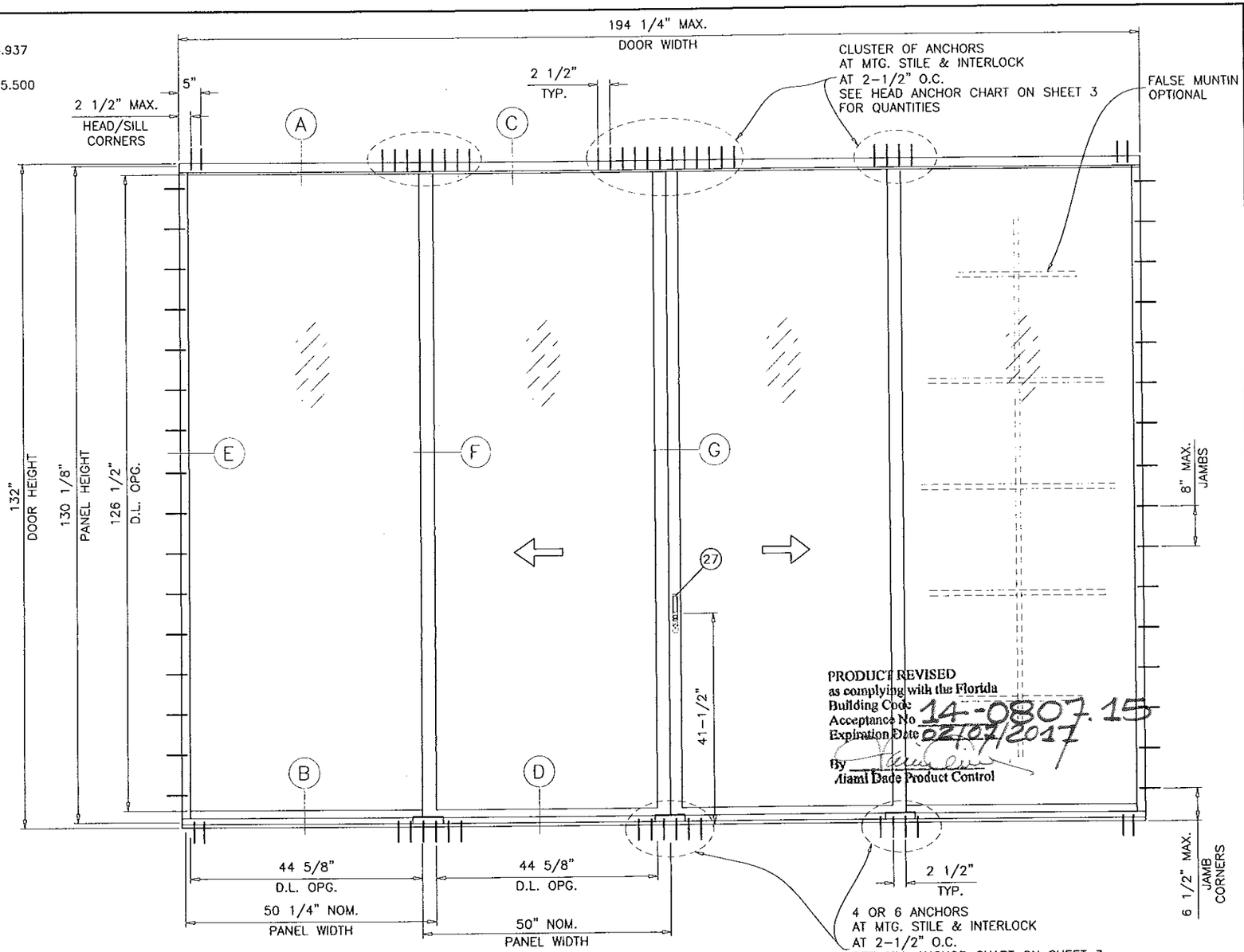

PRODUCT REVISED
as complying with the Florida
Building Code
Acceptance No 14-0807.15
Expiration Date 02/02/2017
By
Miami Dade Product Control

TYPICAL ELEVATION

TESTED UNIT (OXXO)

SERIES-2400ST ALUMINUM SLIDING GLASS DOOR

SEE SHEET 2 FOR DESIGN LOAD CAPACITY OF DESIRED GLASS SIZE.

USING CHART ON SHEET 3 SELECT ANCHOR OPTION WITH DESIGN RATING MORE THAN DESIGN LOADS REQUIRED.

LOWER DESIGN PRESSURES FROM GLASS OR ANCHOR CHARTS (HEAD OR SILL) WILL APPLY TO ENTIRE SYSTEM.

DOORS MUST COMPLY WITH EGRESS REQUIREMENTS AS APPLICABLE PER FBC.

THIS PRODUCT HAS BEEN DESIGNED AND TESTED TO COMPLY WITH THE REQUIREMENTS OF THE FLORIDA BUILDING CODE 2010 EDITION INCLUDING HIGH VELOCITY HURRICANE ZONE (HVHZ).

1BY OR 2BY WOOD BUCKS BY OTHERS, MUST BE ANCHORED PROPERLY TO TRANSFER LOADS TO THE STRUCTURE.

ANCHORS SHALL BE AS LISTED, SPACED AS SHOWN ON DETAILS, ANCHORS EMBEDMENT TO BASE MATERIAL SHALL BE BEYOND WALL DRESSING OR STUCCO.

ANCHORING OR LOADING CONDITIONS NOT SHOWN IN THESE DETAILS ARE NOT PART OF THIS APPROVAL.

A LOAD DURATION INCREASE IS USED IN DESIGN OF ANCHORS INTO WOOD ONLY.

MATERIALS INCLUDING BUT NOT LIMITED TO STEEL/METAL SCREWS, THAT COME INTO CONTACT WITH OTHER DISSIMILAR MATERIALS SHALL MEET THE REQUIREMENTS OF 2010 FLORIDA BLDG. CODE SECTION 2003.8.4.

THESE DOORS ARE RATED FOR SMALL MISSILE IMPACT.
MIAMI-DADE COUNTY APPROVED IMPACT RESISTANT SHUTTERS REQUIRED FOR INSTALLATIONS UP TO 30 FT. OF GRADE.
SHUTTERS NOT REQD. FOR INSTALLATIONS ABOVE 30 FT. OF GRADE.

Engr: JAVAD AHMAD
CIVIL
FLA. PE # 70592
C.A.N. 3538

AUG 27 2014

AL-FAROOQ CORPORATION
ENGINEERS & PRODUCT DEVELOPMENT
1235 S.W. 87 AVE
MIAMI, FLORIDA 33174
TEL. (305) 264-8100 FAX. (305) 262-6978

COMP-ANL\W01-54RC

SERIES-2400ST ALUM SLD. GLASS DOOR (S.M.I.)

TECNOGLASS, LLC
5220 N.W. 72 AVE. BAY #4
MIAMI, FL. 33166
TEL. (305) 624-7775 FAX. (305) 624-7777

revisions:

no	date	by	description
K	12.31.08		REV. PER BCCO COMMENTS
L	08.21.09		NO CHANGE THIS SHEET
M	09.14.09		NO CHANGE THIS SHEET
N	11.08.11		UPDATED TO 2010 FBC
O	08.01.14		MANUF. NAME REV.

date: 08-17-01
scale: 1/2"=1'-0"
dr. by: HAMID
chk. by:

drawing no.
W01-54

DESIGN LOAD CAPACITY - PSF							
PANEL WIDTH NOMINAL INCHES	DOOR HEIGHT INCHES	GLASS TYPE 'A'		GLASS TYPE 'B'		GLASS TYPE 'C'	
		EXT.(+)	INT.(-)	EXT.(+)	INT.(-)	EXT.(+)	INT.(-)
30	96	131.0	142.0	120.0	120.0	131.0	131.0
36		131.0	142.0	120.0	120.0	131.0	131.0
42		131.0	142.0	120.0	120.0	131.0	131.0
48		131.0	142.0	120.0	120.0	131.0	131.0
54		131.0	131.0	120.0	120.0	131.0	131.0
60		131.0	131.0	120.0	120.0	131.0	131.0
30	102	131.0	142.0	120.0	120.0	131.0	131.0
36		131.0	142.0	120.0	120.0	131.0	131.0
42		131.0	142.0	120.0	120.0	131.0	131.0
48		131.0	131.0	120.0	120.0	131.0	131.0
54		131.0	131.0	120.0	120.0	131.0	131.0
60		–	–	–	–	120.0	120.0
30	103-3/8	131.0	142.0	120.0	120.0	131.0	131.0
36		131.0	142.0	120.0	120.0	131.0	131.0
42		131.0	142.0	120.0	120.0	131.0	131.0
44		131.0	142.0	120.0	120.0	131.0	131.0
30	108	131.0	131.0	120.0	120.0	131.0	131.0
36		131.0	131.0	120.0	120.0	131.0	131.0
42		131.0	131.0	120.0	120.0	131.0	131.0
48		131.0	131.0	120.0	120.0	131.0	131.0
54		–	–	–	–	131.0	131.0
30	114	131.0	131.0	120.0	120.0	131.0	131.0
36		131.0	131.0	120.0	120.0	131.0	131.0
42		131.0	131.0	120.0	120.0	131.0	131.0
48		131.0	131.0	120.0	120.0	131.0	131.0
54		–	–	–	–	120.0	120.0
30	119-1/2	131.0	131.0	120.0	120.0	131.0	131.0
36		131.0	131.0	120.0	120.0	131.0	131.0
42		131.0	131.0	120.0	120.0	131.0	131.0
48		128.7	128.7	120.0	120.0	131.0	131.0
30	120	120.0	120.0	120.0	120.0	131.0	131.0
36		120.0	120.0	120.0	120.0	131.0	131.0
42		120.0	120.0	120.0	120.0	131.0	131.0
48		120.0	120.0	120.0	120.0	131.0	131.0
30	126	120.0	120.0	120.0	120.0	120.0	120.0
36		120.0	120.0	120.0	120.0	120.0	120.0
42		120.0	120.0	120.0	120.0	120.0	120.0
48		–	–	120.0	120.0	120.0	120.0
30	132	120.0	120.0	120.0	120.0	120.0	120.0
36		120.0	120.0	120.0	120.0	120.0	120.0
42		120.0	120.0	120.0	120.0	120.0	120.0
48		–	–	120.0	120.0	120.0	120.0

NOTE:
GLASS CAPACITIES ON THIS SHEET ARE BASED ON ASTM E1300-04 (3 SEC. GUSTS) AND FLORIDA BUILDING COMMISSION DECLARATORY STATEMENT DCA05-DEC-219

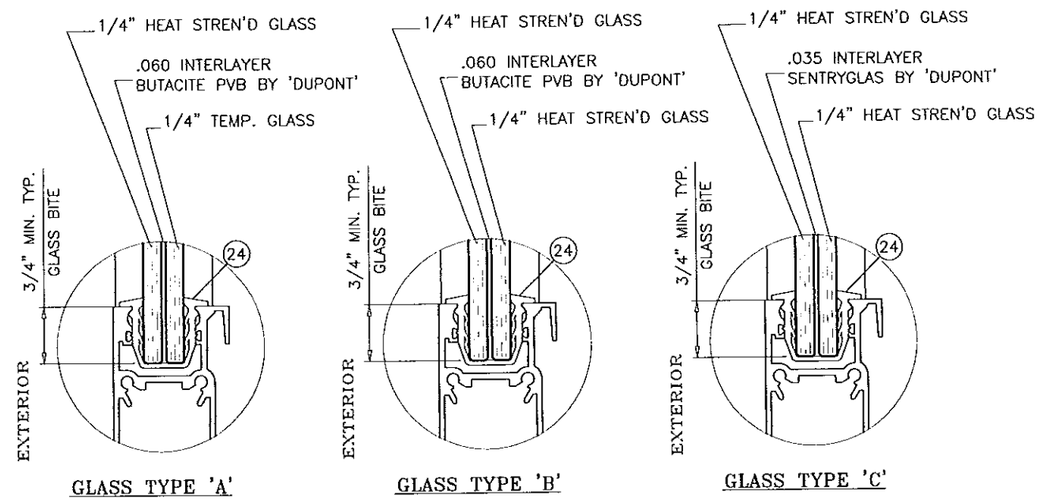

GLAZING OPTIONS

NOTE:
ON DOORS WITH NOMINAL PANEL WIDTHS GREATER THAN 48 INCHES LIMIT EXTERIOR(+) DESIGN LOADS TO +120.0 PSF.

PRODUCT REVISED
as complying with the Florida Building Code
Acceptance No 14-0807.15
Expiration Date 02/07/2017
By
Miami Dade Product Control

Engr: JAVAD AHMAD
CIVIL
FLA. PE # 70592
C.A.N. 3538
AUG 27 2014

AL-FAROOQ CORPORATION
ENGINEERS & PRODUCT DEVELOPMENT
1235 S.W. 87 AVE
MIAMI, FLORIDA 33174
TEL (305) 264-8100 FAX. (305) 262-6978

COMP-ANL\W01-54RC

SERIES-2400ST ALUM SLD. GLASS DOOR (S.M.I.)

TECNOGLASS, LLC
5220 N.W. 72 AVE. BAY #4
MIAMI, FL. 33166
TEL. (305) 624-7775 FAX. (305) 624-7777

revisions:

no.	date	by	description
K	12.31.08		REV. PER BCCO COMMENTS
L	08.21.09		REV. PER BCCO COMMENTS
M	09.14.09		REV. PER BCCO COMMENTS
N	11.08.11		UPDATED TO 2010 FBC
O	08.01.14		MANUF. NAME REV.

date: 08-17-01
scale: 1/2"=1'-0"
dr. by: HAMID
chk. by:

drawing no.
W01-54

DESIGN LOAD CAPACITY – PSF (HEAD ANCHORS)

PANEL WIDTH NOMINAL INCHES	DOOR HEIGHT INCHES	ANCHORS TYPE A		ANCHORS TYPE B						ANCHORS TYPE C								
		1/2" MAX. SHIM SPACE		1/4" MAX. SHIM SPACE		3/8" MAX. SHIM SPACE		1/2" MAX. SHIM SPACE		1/4" MAX. SHIM SPACE			3/8" MAX. SHIM SPACE			1/2" MAX. SHIM SPACE		
		3 ANCHORS AT FREE STAND. JAMB	4 ANCHORS AT FREE STAND. JAMB	2 ANCHORS AT FREE STAND. JAMB	3 ANCHORS AT FREE STAND. JAMB	2 ANCHORS AT FREE STAND. JAMB	3 ANCHORS AT FREE STAND. JAMB	3 ANCHORS AT FREE STAND. JAMB	4 ANCHORS AT FREE STAND. JAMB	2 ANCHORS AT FREE STAND. JAMB	3 ANCHORS AT FREE STAND. JAMB	4 ANCHORS AT FREE STAND. JAMB	3 ANCHORS AT FREE STAND. JAMB	4 ANCHORS AT FREE STAND. JAMB	5 ANCHORS AT FREE STAND. JAMB	4 ANCHORS AT FREE STAND. JAMB	5 ANCHORS AT FREE STAND. JAMB	6 ANCHORS AT FREE STAND. JAMB
		6 ANCHORS AT MTG. STILE ENDS	8 ANCHORS AT MTG. STILE ENDS	4 ANCHORS AT MTG. STILE ENDS	6 ANCHORS AT MTG. STILE ENDS	4 ANCHORS AT MTG. STILE ENDS	6 ANCHORS AT MTG. STILE ENDS	6 ANCHORS AT MTG. STILE ENDS	8 ANCHORS AT MTG. STILE ENDS	4 ANCHORS AT MTG. STILE ENDS	6 ANCHORS AT MTG. STILE ENDS	8 ANCHORS AT MTG. STILE ENDS	6 ANCHORS AT MTG. STILE ENDS	8 ANCHORS AT MTG. STILE ENDS	10 ANCHORS AT MTG. STILE ENDS	8 ANCHORS AT MTG. STILE ENDS	10 ANCHORS AT MTG. STILE ENDS	12 ANCHORS AT MTG. STILE ENDS
		EXT. (+) INT. (–)	EXT. (+) INT. (–)	EXT. (+) INT. (–)	EXT. (+) INT. (–)	EXT. (+) INT. (–)	EXT. (+) INT. (–)	EXT. (+) INT. (–)	EXT. (+) INT. (–)	EXT. (+) INT. (–)	EXT. (+) INT. (–)	EXT. (+) INT. (–)	EXT. (+) INT. (–)	EXT. (+) INT. (–)	EXT. (+) INT. (–)	EXT. (+) INT. (–)	EXT. (+) INT. (–)	EXT. (+) INT. (–)
30	96	142.0	142.0	142.0	142.0	142.0	142.0	142.0	142.0	142.0	142.0	142.0	142.0	142.0	142.0	142.0	142.0	142.0
36		142.0	142.0	142.0	142.0	142.0	142.0	142.0	142.0	131.7	142.0	142.0	127.3	142.0	142.0	138.8	142.0	142.0
42		132.9	142.0	142.0	142.0	132.6	142.0	142.0	142.0	112.9	142.0	142.0	109.1	142.0	142.0	119.0	142.0	142.0
48		116.3	142.0	142.0	142.0	116.0	142.0	142.0	142.0	98.8	142.0	142.0	95.5	127.4	142.0	104.1	130.2	142.0
54		103.3	137.8	128.9	142.0	103.1	142.0	126.4	142.0	87.8	131.7	142.0	84.9	113.2	141.6	92.6	115.7	138.8
60		93.0	124.0	116.0	142.0	92.8	139.3	113.8	142.0	79.0	118.5	142.0	76.4	101.9	127.4	83.3	104.2	125.0
30	102	142.0	142.0	142.0	142.0	142.0	142.0	142.0	142.0	142.0	142.0	142.0	142.0	142.0	142.0	142.0	142.0	142.0
36		142.0	142.0	142.0	142.0	142.0	142.0	142.0	142.0	123.9	142.0	142.0	119.8	142.0	142.0	130.7	142.0	142.0
42		125.0	142.0	142.0	142.0	124.8	142.0	142.0	142.0	106.2	142.0	142.0	102.7	137.0	142.0	112.0	140.0	142.0
48		109.4	142.0	136.5	142.0	109.2	142.0	133.9	142.0	92.9	139.4	142.0	89.9	119.9	142.0	98.0	122.5	142.0
54		97.3	129.7	121.3	142.0	97.0	142.0	119.0	142.0	82.6	123.9	142.0	79.9	106.6	133.2	87.1	108.9	130.7
60		87.5	116.7	109.2	142.0	87.3	131.1	107.1	142.0	74.4	111.5	142.0	71.9	95.9	119.9	78.4	98.0	117.6
30	103-3/8	142.0	142.0	142.0	142.0	142.0	142.0	142.0	142.0	142.0	142.0	142.0	141.9	142.0	142.0	142.0	142.0	142.0
36		142.0	142.0	142.0	142.0	142.0	142.0	142.0	142.0	122.3	142.0	142.0	118.2	142.0	142.0	128.9	142.0	142.0
42		123.4	142.0	142.0	142.0	123.1	142.0	142.0	142.0	104.8	142.0	142.0	101.4	135.2	142.0	110.5	138.2	142.0
44		117.8	142.0	146.9	142.0	117.5	142.0	142.0	142.0	100.0	142.0	142.0	96.7	129.0	142.0	105.5	131.9	142.0
30	108	142.0	142.0	142.0	142.0	142.0	142.0	142.0	142.0	140.4	142.0	142.0	135.8	142.0	142.0	142.0	142.0	142.0
36		137.8	142.0	142.0	142.0	137.5	142.0	142.0	142.0	117.0	142.0	142.0	113.2	142.0	142.0	123.4	142.0	142.0
42		118.1	142.0	142.0	142.0	117.8	142.0	142.0	142.0	100.3	142.0	142.0	97.0	129.4	142.0	105.8	132.3	142.0
48		103.3	137.8	128.9	142.0	103.1	142.0	126.4	142.0	87.8	131.7	142.0	84.9	113.2	141.6	92.6	115.7	138.8
54		91.9	122.5	114.6	142.0	91.7	137.5	112.4	142.0	78.0	117.0	142.0	75.5	100.6	125.8	82.3	102.9	123.4
30	114	142.0	142.0	142.0	142.0	142.0	142.0	142.0	142.0	133.1	142.0	142.0	128.7	142.0	142.0	140.3	142.0	142.0
36		130.5	142.0	142.0	142.0	130.2	142.0	142.0	142.0	110.9	142.0	142.0	107.2	142.0	142.0	116.9	142.0	142.0
42		111.9	142.0	142.0	142.0	111.6	142.0	136.9	142.0	95.0	142.0	142.0	91.9	122.6	142.0	100.2	125.3	142.0
48		97.9	130.5	122.1	142.0	97.7	142.0	119.8	142.0	83.2	124.7	142.0	80.4	107.3	134.1	87.7	109.6	131.5
54		87.0	116.0	108.5	142.0	86.8	130.3	106.5	141.9	73.9	110.9	142.0	71.5	95.3	119.2	77.9	97.5	116.9
30	119-1/2	142.0	142.0	142.0	142.0	142.0	142.0	142.0	142.0	126.9	142.0	142.0	122.8	142.0	142.0	133.8	142.0	142.0
36		124.5	142.0	142.0	142.0	124.3	142.0	142.0	142.0	105.8	142.0	142.0	102.3	136.4	142.0	111.5	139.4	142.0
42		106.7	142.0	133.1	142.0	106.5	142.0	130.6	142.0	90.7	136.0	142.0	87.7	116.9	142.0	95.6	119.5	142.0
48		93.4	124.5	116.5	142.0	93.2	139.8	114.3	142.0	79.3	119.0	142.0	76.7	102.3	127.9	83.6	104.6	125.5
30	120	142.0	142.0	142.0	142.0	142.0	142.0	142.0	142.0	126.4	142.0	142.0	122.2	142.0	142.0	133.3	142.0	142.0
36		124.0	142.0	142.0	142.0	123.7	142.0	142.0	142.0	105.3	142.0	142.0	101.9	135.9	142.0	111.1	138.9	142.0
42		106.3	141.7	132.6	142.0	106.1	142.0	130.1	142.0	90.3	135.4	142.0	87.3	116.5	142.0	95.2	119.0	142.0
48		93.0	124.0	116.0	142.0	92.8	139.3	113.8	142.0	79.0	118.5	142.0	76.4	101.9	127.4	83.3	104.2	125.0
30	126	120.0	120.0	120.0	120.0	120.0	120.0	120.0	120.0	120.0	120.0	120.0	116.4	120.0	120.0	120.0	120.0	120.0
36		118.1	120.0	120.0	120.0	117.8	120.0	120.0	120.0	100.3	120.0	120.0	97.0	120.0	120.0	105.8	120.0	120.0
42		101.2	120.0	120.0	120.0	101.0	120.0	120.0	120.0	86.0	120.0	120.0	83.2	110.9	120.0	90.7	113.4	120.0
48		88.6	118.1	110.5	120.0	88.4	120.0	108.4	120.0	75.2	112.9	120.0	72.8	97.0	120.0	79.3	99.2	119.0
30	132	120.0	120.0	120.0	120.0	120.0	120.0	120.0	120.0	114.9	120.0	120.0	111.1	120.0	120.0	120.0	120.0	120.0
36		112.7	120.0	120.0	120.0	112.5	120.0	120.0	120.0	95.8	120.0	120.0	92.6	120.0	120.0	101.0	120.0	120.0
42		96.6	120.0	120.0	120.0	96.4	120.0	118.2	120.0	82.1	120.0	120.0	79.4	105.9	120.0	86.5	108.2	120.0
48		84.5	112.7	105.5	120.0	84.4	120.0	103.5	120.0	71.8	107.7	120.0	69.5	92.6	115.8	75.7	94.7	113.6

DESIGN LOAD CAPACITY – PSF SILL ANCHORS

PANEL WIDTH NOMINAL INCHES	DOOR HEIGHT INCHES	2 ANCHORS AT FREE STAND. JAMB	3 ANCHORS AT FREE STAND. JAMB
		4 ANCHORS AT MTG. STILE ENDS	6 ANCHORS AT MTG. STILE ENDS
		EXT. (+) INT. (–)	EXT. (+) INT. (–)
30	96	142.0	142.0
36		142.0	142.0
42		134.0	142.0
48		117.3	142.0
54		104.2	142.0
60		93.8	140.7
30	102	142.0	142.0
36		142.0	142.0
42		126.1	142.0
48		110.4	142.0
54		98.1	142.0
60		88.3	132.4
30	103-3/8	142.0	142.0
36		142.0	142.0
42		124.4	142.0
44		118.8	142.0
30	108	142.0	142.0
36		139.0	142.0
42		119.1	142.0
48		104.2	142.0
54		92.6	139.0
30	114	142.0	142.0
36		131.6	142.0
42		112.8	142.0
48		98.7	142.0
54		87.8	131.6
30	119-1/2	142.0	142.0
36		125.6	142.0
42		107.6	142.0
48		94.2	141.3
30	120	142.0	142.0
36		125.1	142.0
42		107.2	142.0
48		93.8	140.7
30	126	120.0	120.0
36		119.1	120.0
42		102.1	120.0
48		89.3	120.0
30	132	120.0	120.0
36		113.7	120.0
42		97.5	120.0
48		85.3	120.0

NOTE:
SEE SHEET 2 FOR DESIGN LOAD CAPACITY OF DESIRED GLASS SIZE.
USING CHART ON THIS SHEET SELECT ANCHOR OPTION WITH DESIGN RATING MORE THAN DESIGN LOADS REQUIRED.
LOWER DESIGN PRESSURES FROM GLASS OR HEAD OR SILL ANCHOR CHARTS WILL APPLY TO ENTIRE SYSTEM.

PRODUCT REVISED
as complying with the Florida Building Code
Acceptance No 14-0807.15
Expiration Date 02/02/2017
By
Miami Dade Product Control

Engr: JAVAD AHMAD
CIVIL
FLA. PE # 70592
C.A.N. 3538

AUG 27 2014

AL-FAROOQ CORPORATION
ENGINEERS & PRODUCT DEVELOPMENT
1235 S.W. 87 AVE
MIAMI, FLORIDA 33174
TEL. (305) 264-8100 FAX. (305) 262-6978
COMP-ANL\W01-54RC

SERIES-2400ST ALUM SLD. GLASS DOOR (S.M.I.)

TECNOGLASS, LLC
5220 N.W. 72 AVE. BAY #4
MIAMI, FL. 33166
TEL. (305) 624-7775 FAX. (305) 624-7777

revisions:

no	date	by	description
K	12.31.08		REV. PER BCCO COMMENTS
L	08.21.09		NO CHANGE THIS SHEET
M	09.14.09		REV. PER BCCO COMMENTS
N	11.08.11		UPDATED TO 2010 FBC
O	08.01.14		MANUF. NAME REV.

date: 08-17-01
scale: 1/2"=1'-0"
dr. by: HAMID
chk. by:

drawing no.
W01-54

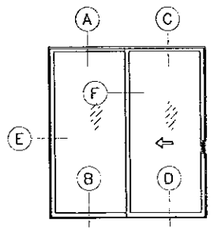

OX (SHOWN)
XO

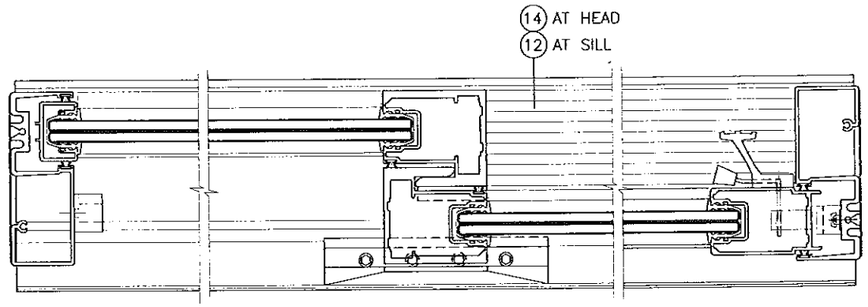

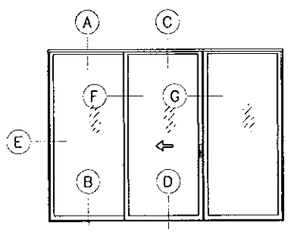

OXO

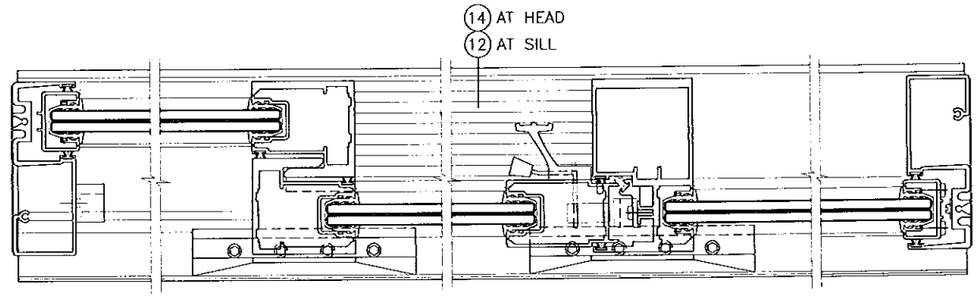

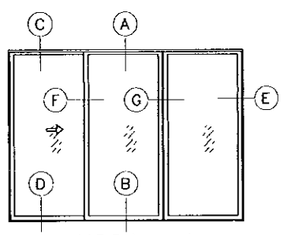

XOO (SHOWN)
OOX

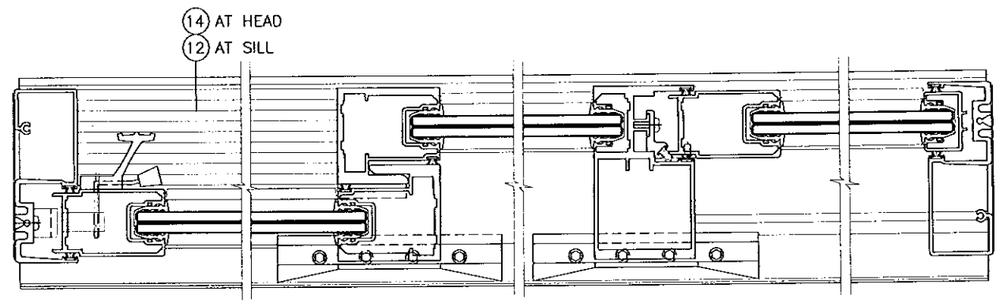

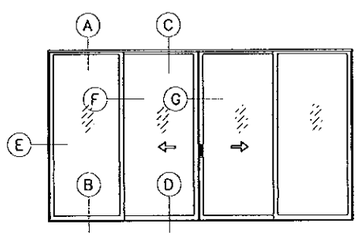

OXXO

APPROVED CONFIGURATIONS

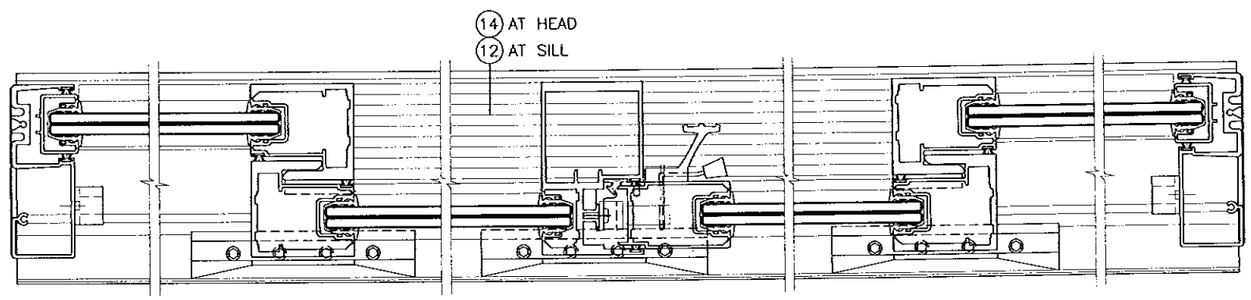

CONFIGURATIONS SHOWN FOR ILLUSTRATION PURPOSES ONLY
SEE SHEETS 5 & 6 FOR FRAME ANCHOR INSTALLATIONS.

PRODUCT REVISED
as complying with the Florida
Building Code
Acceptance No 14-0807.15
Expiration Date 02/07/2017
By
Miami Dade Product Control

Engr: JAVAD AHMAD
CIVIL
FLA. PE # 70592
C.A.N. 3538
AUG 27 2014

AL-FAROOQ CORPORATION
ENGINEERS & PRODUCT DEVELOPMENT
1235 S.W. 87 AVE
MIAMI, FLORIDA 33174
TEL. (305) 264-8100 FAX. (305) 262-6978

COMP-ANL\W01-54RC

SERIES-2400ST ALUM SLD. GLASS DOOR (S.M.I.)

TECNOGLASS, LLC
5220 N.W. 72 AVE. BAY #4
MIAMI, FL. 33166
TEL. (305) 624-7775 FAX. (305) 624-7777

revisions:

no	date	by	description
M	09.14.09		REV. PER BCCD COMMENTS
N	11.08.11		UPDATED TO 2010 FBC
O	08.01.14		MANUF. NAME REV.

date: 08-17-01
scale: -
dr. by: HAMID
chk. by:

drawing no.
W01-54

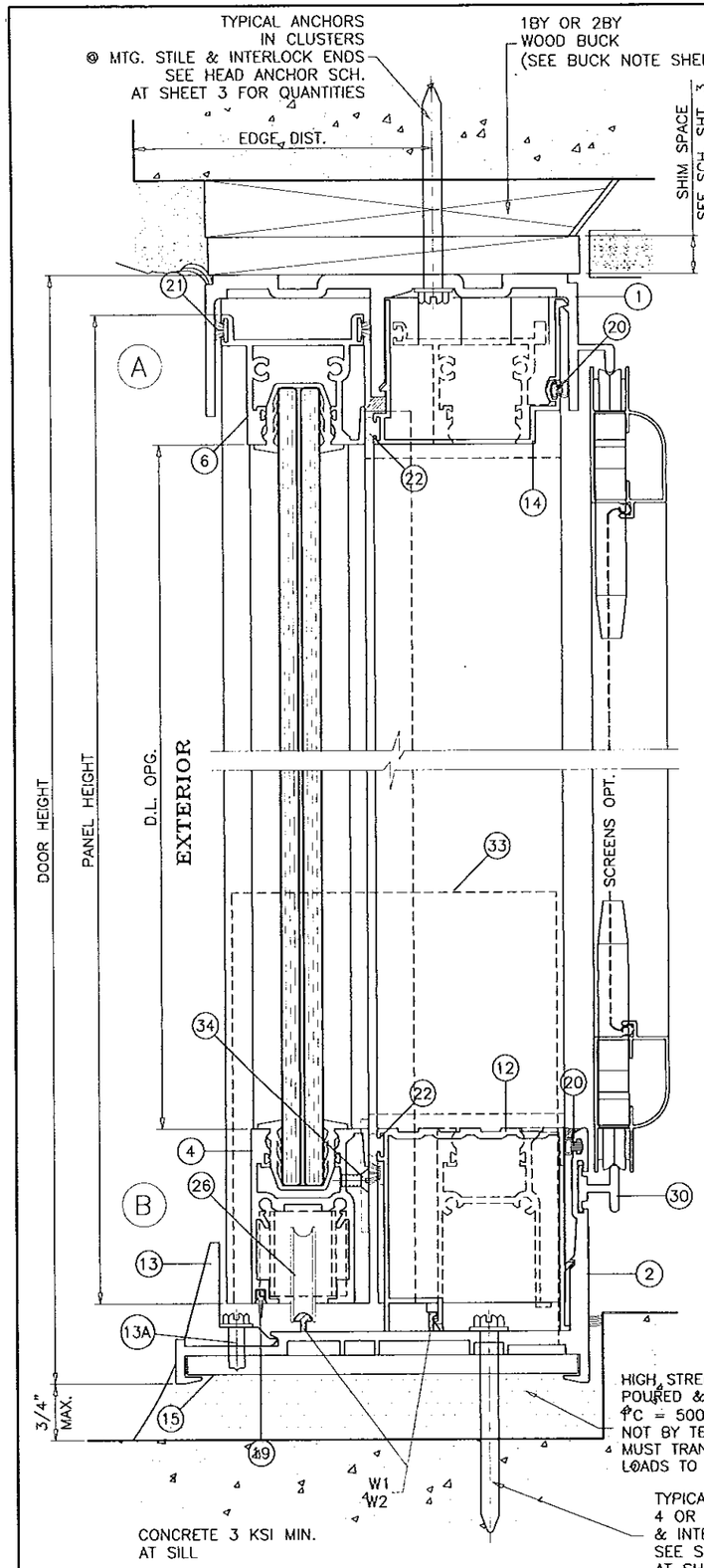

1BY OR 2BY WOOD BUCKS AND METAL STRUCTURES NOT BY TECNOGLASS MUST SUPPORT LOADS IMPOSED BY GLAZING SYSTEM AND TRANSFER THEM TO THE BUILDING STRUCTURE.

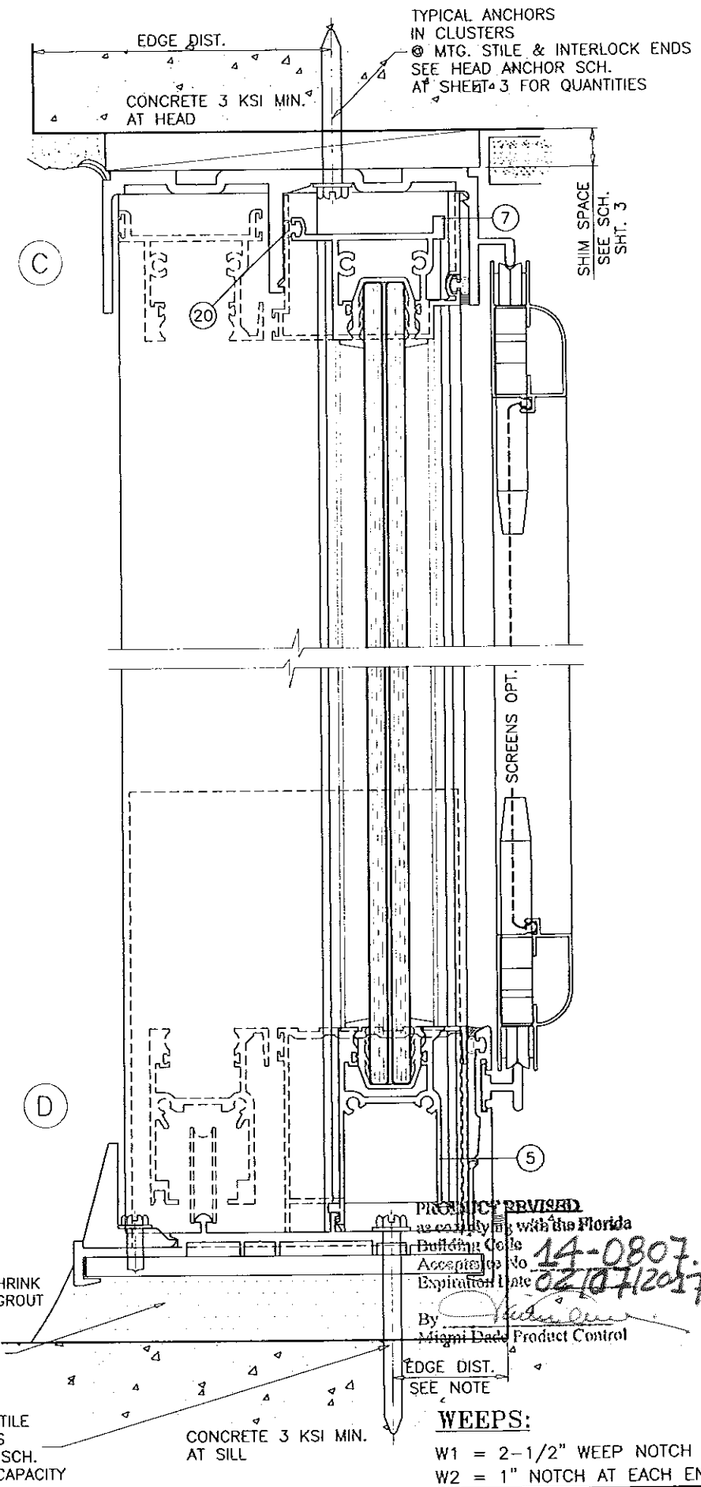

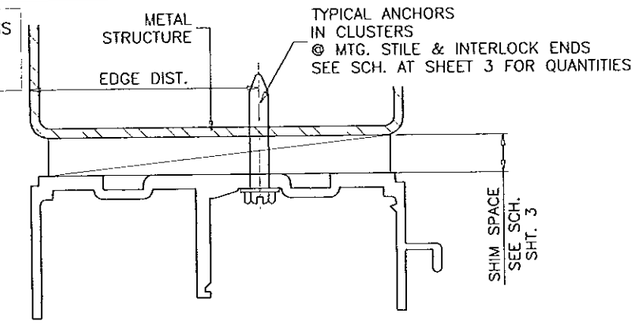

TYPICAL ANCHORS: SEE ELEV. FOR SPACING

AT HEAD

TYPE 'A'

1/4" X 2-3/4" HILTI KWIK-CON II (Fu=163 KSI, Fy=157 KSI)
THRU 1BY OR 2BY WOOD BUCKS INTO CONCRETE
1-3/8" MIN. CONCRETE EMBEDMENT

TYPE 'B'

1/4" X 2-3/4" HILTI KWIK-CON II (Fu=163 KSI, Fy=157 KSI)
DIRECTLY INTO CONCRETE, 1-3/4" MIN. EMBEDMENT

TYPE 'C'

1/4" TEKS OR SELF DRILLING SCREWS (Fu=92 KSI, Fy=120 KSI)
INTO METAL STRUCTURES OR APPROVED MULLIONS
STEEL : 1/8" THK. MIN. (Fy = 36 KSI MIN.)
ALUMINUM : 1/8" THK. MIN. (6063-T5 MIN.)
(STEEL IN CONTACT WITH ALUMINUM TO BE PLATED OR PAINTED)

AT SILL

1/4" DIA HILTI KWIK-CON II (Fu=163 KSI, Fy=157 KSI)
DIRECTLY INTO CONCRETE, 1-3/8" MIN. EMBEDMENT

AT JAMBS

1/4" DIA. HILTI KWIK-CON II (Fu=163 KSI, Fy=157 KSI)
THRU 1BY BUCKS, 1-1/4" MIN. CONC. OR MASONRY EMBED.
INTO 2BY BUCKS, 1-3/8" MIN. WOOD EMBEDMENT
DIRECTLY INTO MASONRY OR CONCRETE
1-1/4" MIN. MASONRY OR CONCRETE EMBEDMENT

1/4" TEKS OR SELF DRILLING SCREWS (Fu=92 KSI, Fy=120 KSI)
INTO METAL STRUCTURES OR APPROVED MULLIONS
STEEL : 1/8" THK. MIN. (Fy = 36 KSI MIN.)
ALUMINUM : 1/8" THK. MIN. (6063-T5 MIN.)
(STEEL IN CONTACT WITH ALUMINUM TO BE PLATED OR PAINTED)

ANCHOR EDGE DISTANCES

INTO CONCRETE = 2-1/2" MIN.
INTO WOOD STRUCTURE = 1" MIN.
INTO METAL STRUCTURE = 3/4" MIN.

CONCRETE AT HEAD, SILL OR JAMBS f'c = 3000 PSI MIN.
C-90 HOLLOW/FILLED BLOCK AT JAMBS f'm = 1500 PSI MIN.

WEEPS:

W1 = 2-1/2" WEEP NOTCH AT SILL CENTER
W2 = 1" NOTCH AT EACH END

PRODUCT REVISED
to comply with the Florida
Building Code
Acceptance No 14-0807.15
Expiration Date 02/07/2017
By
Miami Dade Product Control

Engr: JAVAD AHMAD
CIVIL
FLA. PE # 70592
C.A.N. 3538
AUG 27 2014

AL-FAROOQ CORPORATION
ENGINEERS & PRODUCT DEVELOPMENT
1235 S.W. 87 AVE
MIAMI, FLORIDA 33174
TEL. (305) 264-8100 FAX. (305) 262-6978
COMP-ANL\W01-54RC

SERIES-2400ST ALUM SLD. GLASS DOOR (S.M.I.)

TECNOGLASS, LLC
5220 N.W. 72 AVE. BAY #4
MIAMI, FL. 33166
TEL. (305) 624-7777 FAX. (305) 624-7775

revisions:

no	date	by	description
K	12.31.08		REV. PER BCCO COMMENTS
L	06.21.09		REV. PER BCCO COMMENTS
M	09.14.09		REV. PER BCCO COMMENTS
N	11.06.11		UPDATED TO 2010 FBC
O	08.01.14		MANUF. NAME REV.

date: 08-17-01
scale: 1/2" = 1"
dr. by: HAMID
chk. by:

drawing no.
W01-54

sheet 5 of 10

1BY OR 2BY WOOD BUCKS AND METAL STRUCTURES NOT BY TECNOGLASS MUST SUPPORT LOADS IMPOSED BY GLAZING SYSTEM AND TRANSFER THEM TO THE BUILDING STRUCTURE.

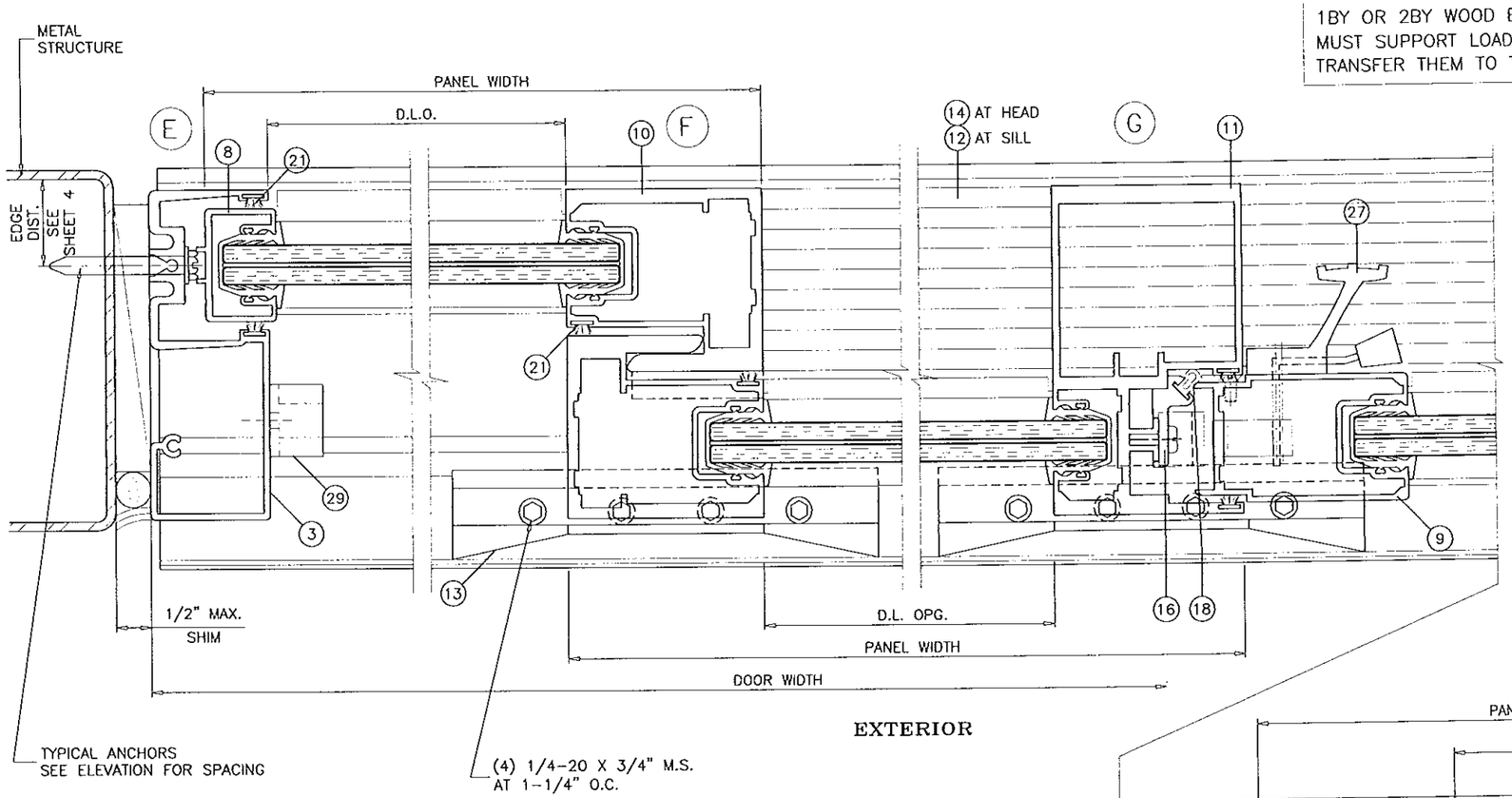

EXTERIOR

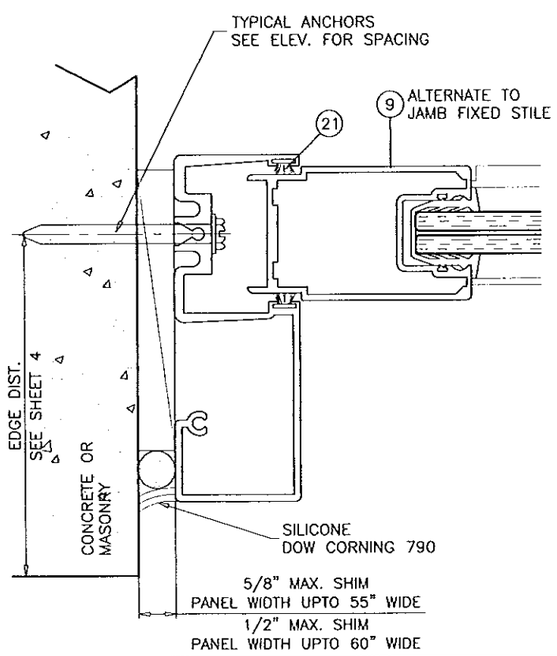

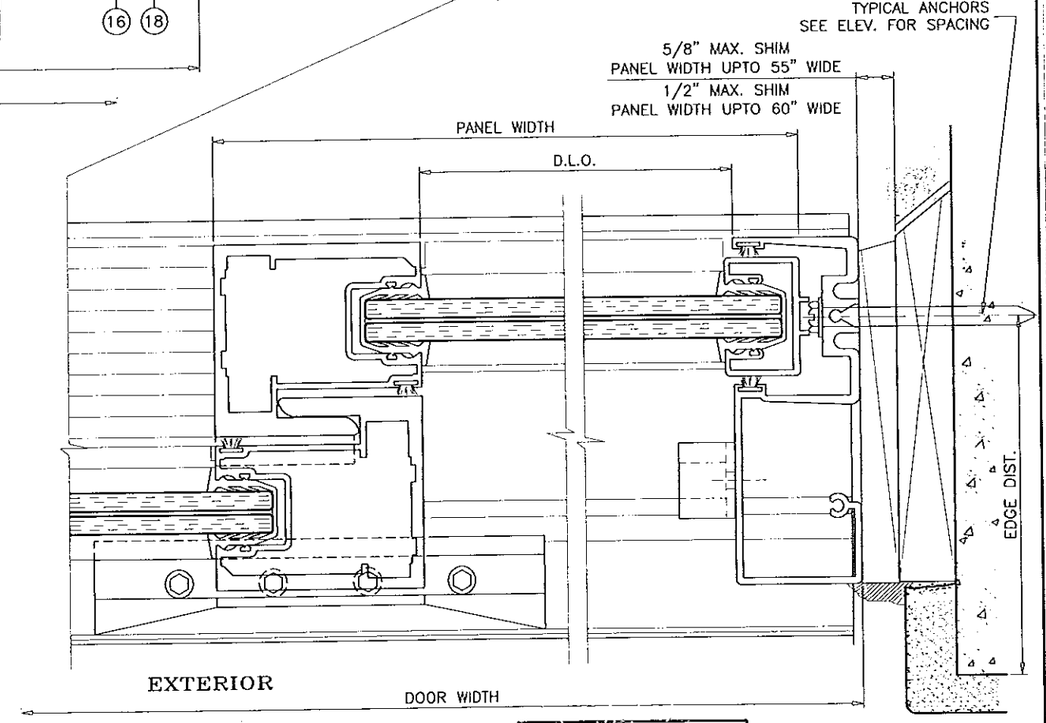

EXTERIOR

PRODUCT REVISED
as complying with the Florida
Building Code
Acceptance No 14-0807.16
Expiration Date 02/04/2017
By
Miami Dade Product Control

Engr: JAVAD AHMAD
CIVIL
FLA. PE # 70592
C.A.N. 3538

AUG 27 2014

AL-FAROOQ CORPORATION
ENGINEERS & PRODUCT DEVELOPMENT
1235 S.W. 87 AVE
MIAMI, FLORIDA 33174
TEL. (305) 264-8100 FAX. (305) 262-6978
COMP-ANL\W01-54RC

SERIES-2400ST ALUM SLD. GLASS DOOR (S.M.I.)

TECNOGLASS, LLC
5220 N.W. 72 AVE. BAY #4
MIAMI, FL. 33166
TEL. (305) 624-7777 FAX. (305) 624-7775

revisions:

no	date	by	description
K	12.31.08		REV. PER BCCO COMMENTS
L	06.21.09		REV. PER BCCO COMMENTS
M	09.14.09		REV. PER BCCO COMMENTS
N	11.08.11		UPDATED TO 2010 FBC
O	08.01.14		MANUF. NAME REV.

date: 08-17-01
scale: 1/2" = 1"
dr. by: HAMID
chk. by:

drawing no. W01-54

sheet 6 of 10

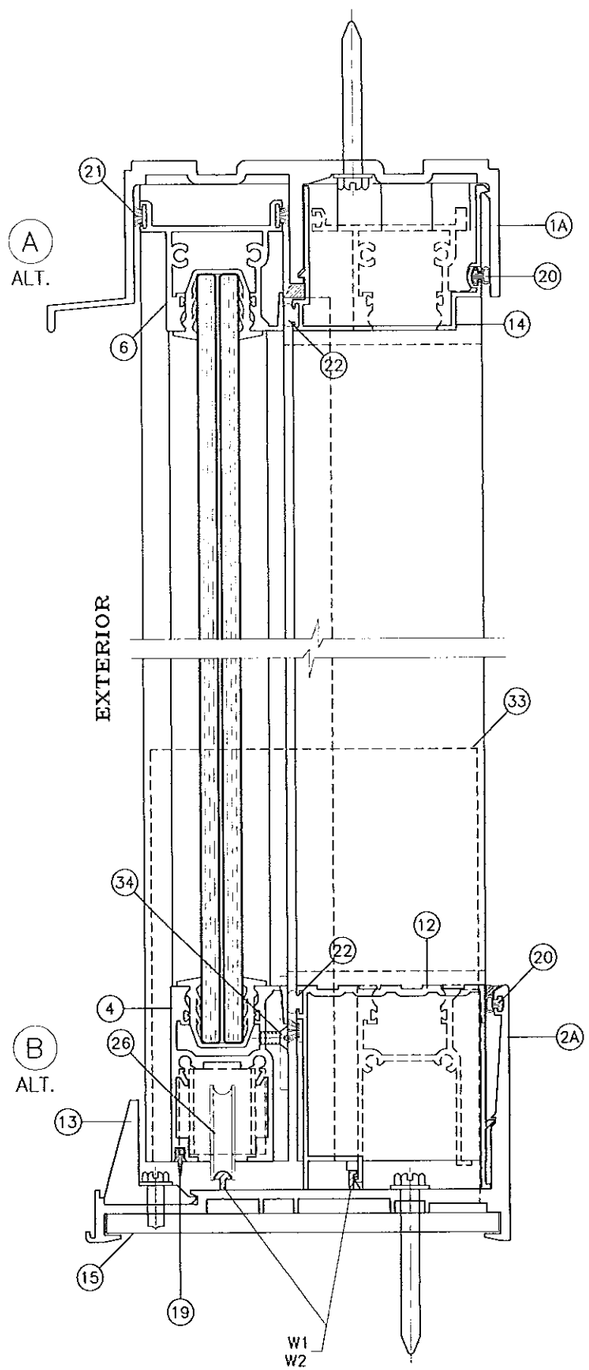

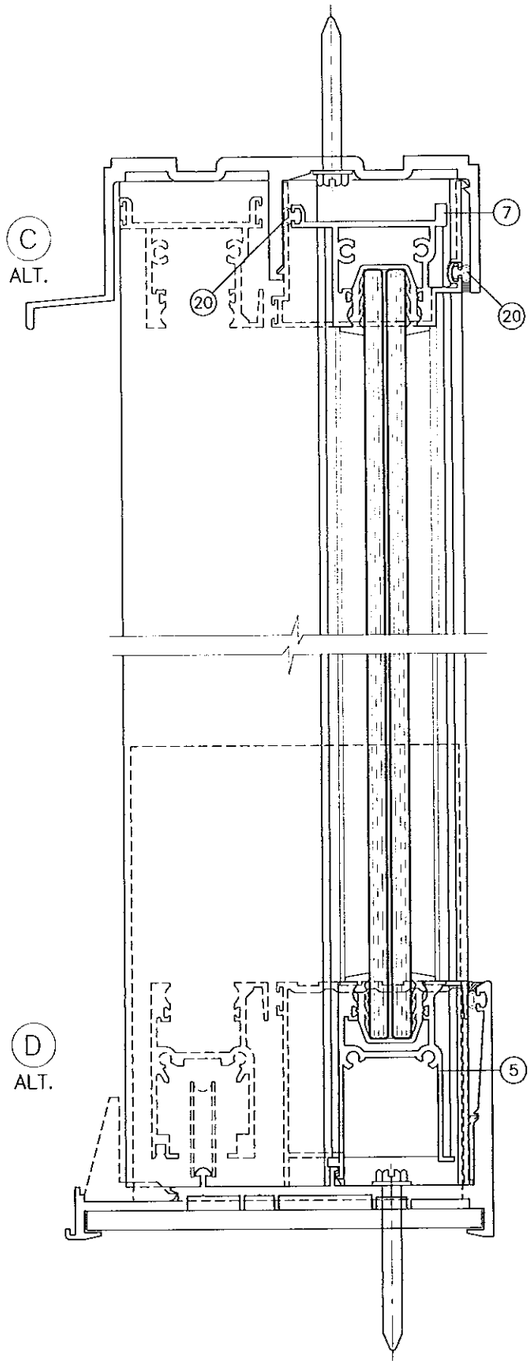

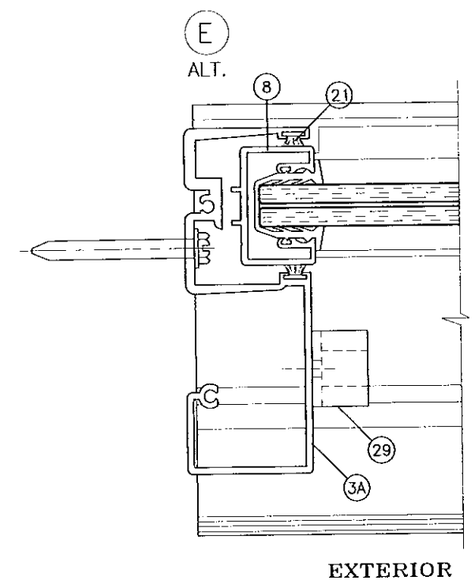

ILLUSTRATED ALTERNATE DOOR FRAMES (W/O SUBSTRATE)

THIS SHEET SHOWS ALTERNATE DOOR FRAMES WITH OUTSIDE SCREEN OPTION. HEAD/SILL/JAMB INSTALLATION FOR THESE FRAMES IS IDENTICAL TO STANDARD FRAMES INSTALLATION AS SHOWN ON SHEETS 5 AND 6.

PRODUCT REVISED
as complying with the Florida
Building Code
Acceptance No 14-0807.15
Expiration Date 02/07/2017
By
Miami Dade Product Control

Engr: JAVAD AHMAD
CIVIL
FLA. PE # 70592
C.A.N. 3538
AUG 27 2014

AL-FAROOQ CORPORATION
ENGINEERS & PRODUCT DEVELOPMENT
1235 S.W. 87 AVE
MIAMI, FLORIDA 33174
TEL. (305) 264-8100 FAX. (305) 262-6978
COMP-ANL\W01-54RC

SERIES-2400ST ALUM SLD. GLASS DOOR (S.M.I.)

TECNOGLASS, LLC
5220 N.W. 72 AVE. BAY #4
MIAMI, FL. 33166
TEL. (305) 624-7775 FAX. (305) 624-7777

revisions:

no.	date	by	description
K	12.31.08		REV. PER BCCO COMMENTS
L	08.21.09		NO CHANGE THIS SHEET
M	09.14.09		NO CHANGE THIS SHEET
N	11.08.11		UPDATED TO 2010 FBC
O	08.01.14		MANUF. NAME REV.

date: 08-17-01
scale: 1/2" = 1"
dr. by: HAMID
chk. by:

drawing no.
W01-54

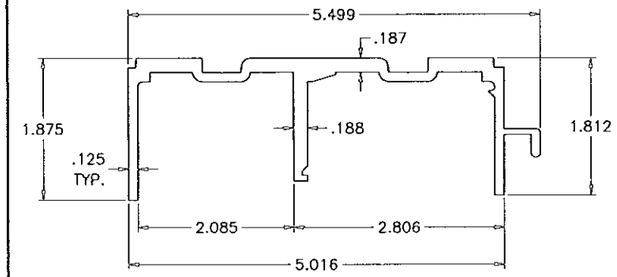

1 FRAME HEAD

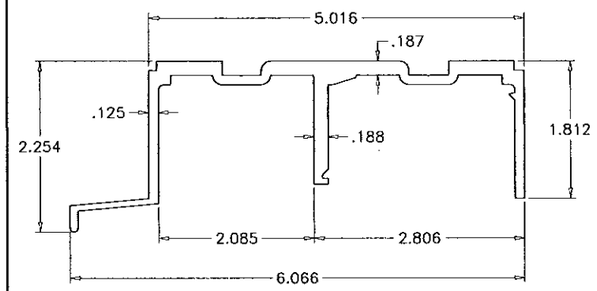

1A ALT. FRAME HEAD

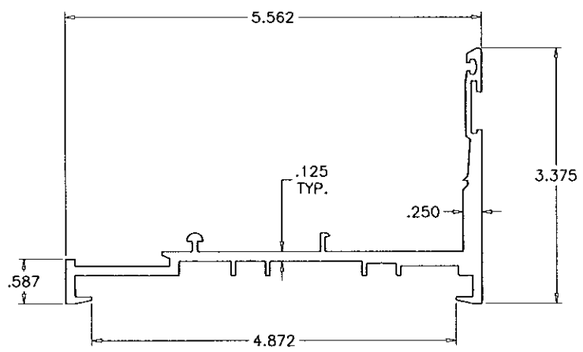

2 FRAME SILL

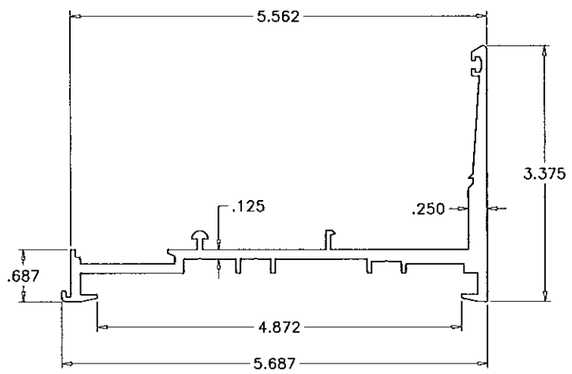

2A ALT. FRAME SILL

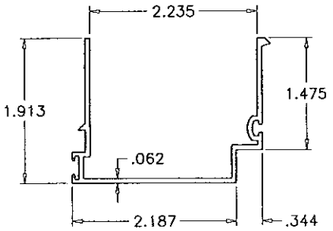

14 HEAD ADAPTER

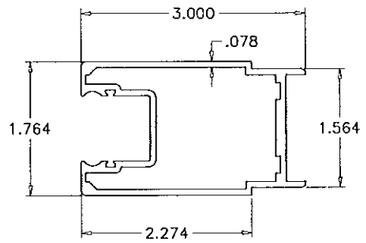

9 LOCK STILE

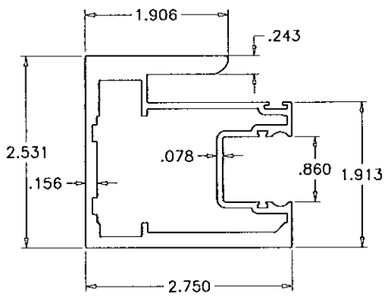

10 INTERLOCK

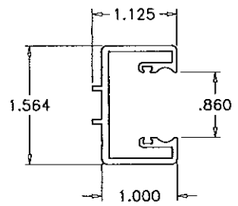

8 FIXED STILE

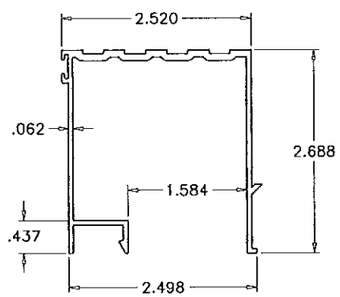

12 THRESHOLD

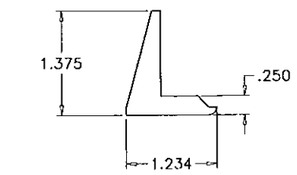

13 SILL ANCHOR

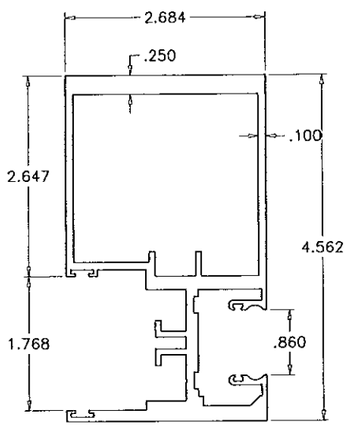

11 MTG. STILE

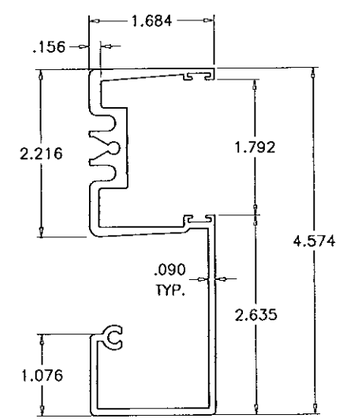

3 FRAME JAMB

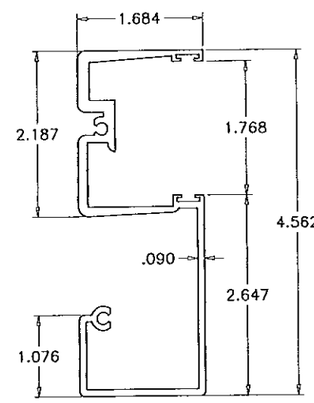

3A ALT. FRAME JAMB

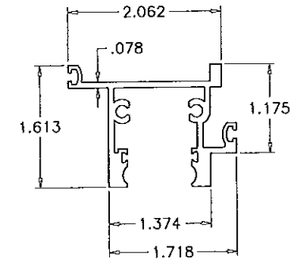

7 FIX. TOP RAIL

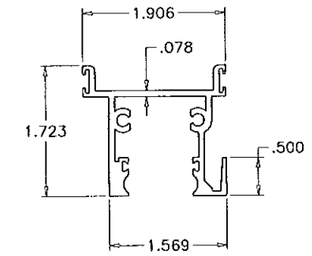

6 MOV. TOP RAIL

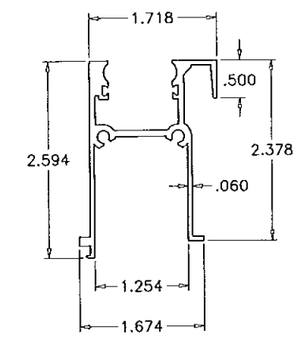

5 FIX. BOTTOM RAIL

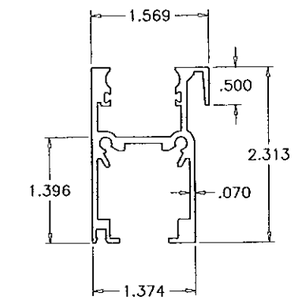

4 MOVING BOTTOM RAIL

PRODUCT REVISED
as complying with the Florida
Building Code
Acceptance No 14-0807.15
Expiration Date 02/07/2017
By
Miami Dade Product Control

Engr: JAVAD AHMAD
CIVIL
FLA. PE # 70592
C.A.N. 3538

AUG 27 2014

AL-FAROOQ CORPORATION
ENGINEERS & PRODUCT DEVELOPMENT
1235 S.W. 87 AVE
MIAMI, FLORIDA 33174
TEL. (305) 264-8100 FAX. (305) 262-6978
COMP-ANL\W01-54RC

SERIES-2400ST ALUM SLD. GLASS DOOR (S.M.I.)

TECNOGLASS, LLC
5220 N.W. 72 AVE. BAY #4
MIAMI, FL. 33166
TEL. (305) 624-7775 FAX. (305) 624-7777

revisions:

no	date	by	description
K	12.31.08		REV. PER BCCO COMMENTS
L	08.21.09		REV. PER BCCO COMMENTS
M	09.14.09		NO CHANGE THIS SHEET
N	11.08.11		UPDATED TO 2010 FBC
O	08.01.14		MANUF. NAME REV.

date: 08-17-01
scale: 1/2" = 1"
dr. by: HAMID
chk. by:

drawing no.
W01-54

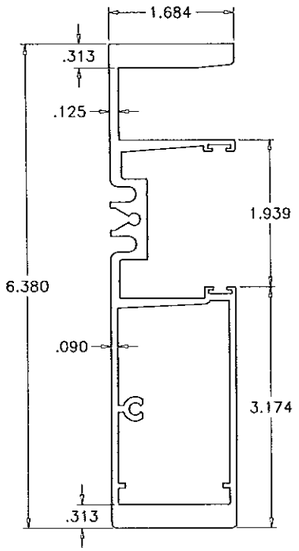

Ix IN^4	Sx IN^3
13.025	4.031

(35) FREE STANDING FRAME JAMB FIXED SIDE

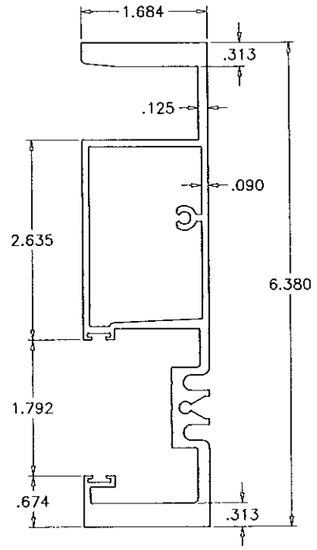

Ix IN^4	Sx IN^3
13.336	4.051

(36) FREE STANDING FRAME JAMB OPERABLE SIDE

ITEM NO.	PART NUMBER	QUANTITY	DESCRIPTION	MATERIAL	MANF./SUPPLIER/REMARKS
1	2400ST-038	1	FRAME HEAD	6063-T6/6005-T5	–
1A	2400ST-018	1	ALT. FRAME HEAD	6063-T6	–
2	2400ST-039	1	FRAME SILL	6005-T5	–
2A	2400ST-010	1	ALT. FRAME SILL	6005-T5	–
3	2400ST-042	2	FRAME JAMB	6063-T6	–
3A	2400ST-001	2	ALT. FRAME JAMB	6063-T6	–
4	2400ST-008	1/MOV. PANEL	MOVING HORIZ. BOTT. RAIL	6063-T6	–
5	2400ST-009	1/FIX. PANEL	FIXED HORIZ. BOTT. RAIL	6063-T6	–
6	2400ST-006	1/MOV. PANEL	TOP MOVING RAIL	6063-T6	–
7	2400ST-007	1/FIX. PANEL	TOP FIXED RAIL	6063-T6	–
8	2400ST-004	1/FIX. PANEL	JAMB FIXED STILE	6063-T6	–
9	2400ST-002	1	JAMB FIX. STILE/LOCK STILE	6063-T6	–
10	2400ST-037	1/ PANEL	INTERLOCK	6005-T5	–
11	2400ST-005	1	MEETING STILE	6005-T5	–
12	2400ST-012	1	THRESHOLD FILLING TRACK	6063-T6	LENGTH=OPG. W. BETWEEN FIXED PANELS
13	2400ST-011	–	SILL TRACK ANCHOR CLIP, 6" LONG	6005-T5	–
13A	–	4/ CLIP	1/4-20 X 3/4" LG. SOCKET HEAD CAP SCREWS	ST/ST	–
14	2400ST-019	1	HEAD ADAPTER	6063-T6	LENGTH=OPG. W. BETWEEN FIXED PANELS
15	2400ST-031	2	SILL TRACK PLATE (5-1/4" X 1/4" X 4" LONG)	ALUMINUM	AT EACH END
15A	2400ST-031	3	SILL TRACK PLATE (5-1/4" X 1/4" X 8" LONG)	ALUMINUM	AT INTERLOCK/ASTRAGAL STILES
16	2400ST-032	–	MTG. RAIL THRESHOLD SEAL	6063-T5	6" LONG
17	#10 X 1/2"	2	WEATHERSTRIP FASTENERS	–	–
18	V-027	–	BULB W'STRIPPING, DUROMETER 75±5 SHORE A	TPE	FP-712 PROTOTYPE
19	WV-2310	–	FLAP WEATHER SEAL, DUROMETER 75±5 SHORE A	VINYL	WIBORG
20	V-026	–	BULB W'STRIPPING, DUROMETER 65±5 SHORE A	SOFT PVC	FP-198 PROTOTYPE
21	W31265NK	–	FIN PILE W'STRIPPING	–	ULTRAFAB
22	Q250X270	–	Q-LON W'STRIPPING	–	SCHLEGEL
24	V-022	AS REQD.	GLAZING GASKET, DUROMETER 75±5 SHORE A	VINYL	9/16" GLASS
26	100-7101	2/MOV. PANEL	TANDEM WHEEL ASSEMBLY	–	WORLD IND. PRODUCTS INTL.
27	10-0030XX	1	STANDARD SLIDE SET LOCK	–	WORLD IND. PRODUCTS INTL.
28	–	1	LOCK KEEPER	–	–
29	–	–	DOOR BUMPER	–	1" DIA. X 3/4" LONG
30	2400ST-040	AS REQD.	INSIDE SCREEN TRACK	6063-T6	–
31	#10 X 1-1/2"	2/ PANEL	PANEL ASSBY. SCREWS	ST/ST	–
32	#10 X 1"	2/ CORNER	FRAME ASSBY. SCREWS	–	–
33	–	2	4-1/4" X .060" X 6" LONG PLATE	ALUMINUM	AT FRAME JAMB BOTTOM
34	–	–	5/8" X 1-1/2" X .1" PLATE @ LOCK STILE BOTTOM	ALUMINUM	FASTENED W/ #8 X 3/8" FH SMS
35	2400ST-071	1	FREE STANDING JAMB (FIX. SIDE)	6005-T5	–
36	2400ST-072	1	FREE STANDING JAMB (OPERABLE SIDE)	6005-T5	–

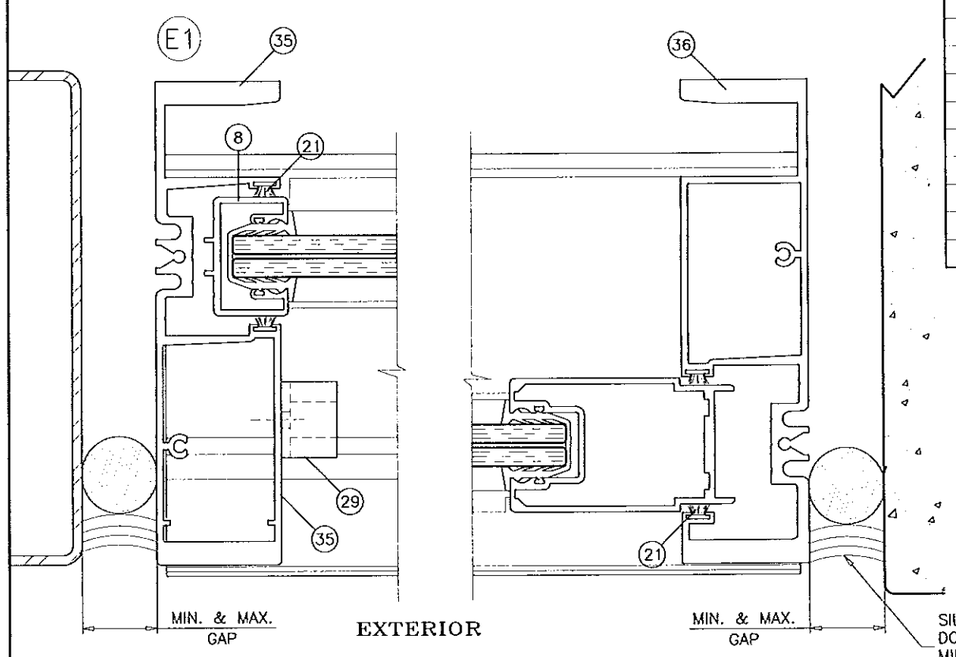

FREE STANDING JAMB FIXED SIDE

FREE STANDING JAMB OPERABLE SIDE

SEALANTS:

ALL FRAME AND PANEL JOINT, INSTALLATION SCREWS AND HEADS OF ANCHOR SCREWS AT SILL TO BE SEALED WITH WHITE/ALUM COLORED SEALANT.

LOCKS:

SURFACE MOUNT THREE PLY HOOK LOCK BY 'WORLD INDUSTRIAL PRODUCTS' AT 41-1/2" FROM BOTTOM WITH KEEPERS AT LOCK POSITION.

PRODUCT REVISED
as complying with the Florida
Building Code
Acceptance No 14-0807.15
Expiration Date 02/07/2017
By
Miami Dade Product Control

Engr: JAVAD AHMAD
CIVIL
FLA. PE # 70592
C.A.N. 3538

AUG 27 2014

AL-FAROOQ CORPORATION
ENGINEERS & PRODUCT DEVELOPMENT
1235 S.W. 87 AVE
MIAMI, FLORIDA 33174
TEL. (305) 264-8100 FAX. (305) 262-6978
COMP-ANL\W01-54RC

SERIES-2400ST ALUM SLD. GLASS DOOR (S.M.I.)

TECNOGLASS, LLC
5220 N.W. 72 AVE. BAY #4
MIAMI, FL. 33166
TEL. (305) 624-7775 FAX. (305) 624-7777

revisions:

no	date	by	description
K	12.31.08		REV. PER BCCO COMMENTS
L	08.21.09		NO CHANGE THIS SHEET
M	09.14.09		REV. PER BCCO COMMENTS
N	11.08.11		UPDATED TO 2010 FBC
O	08.01.14		MANUF. NAME REV.

date: 08-17-01
scale: 1/2" = 1"
dr. by: HAMID
chk. by:

drawing no. W01-54

sheet 9 of 10

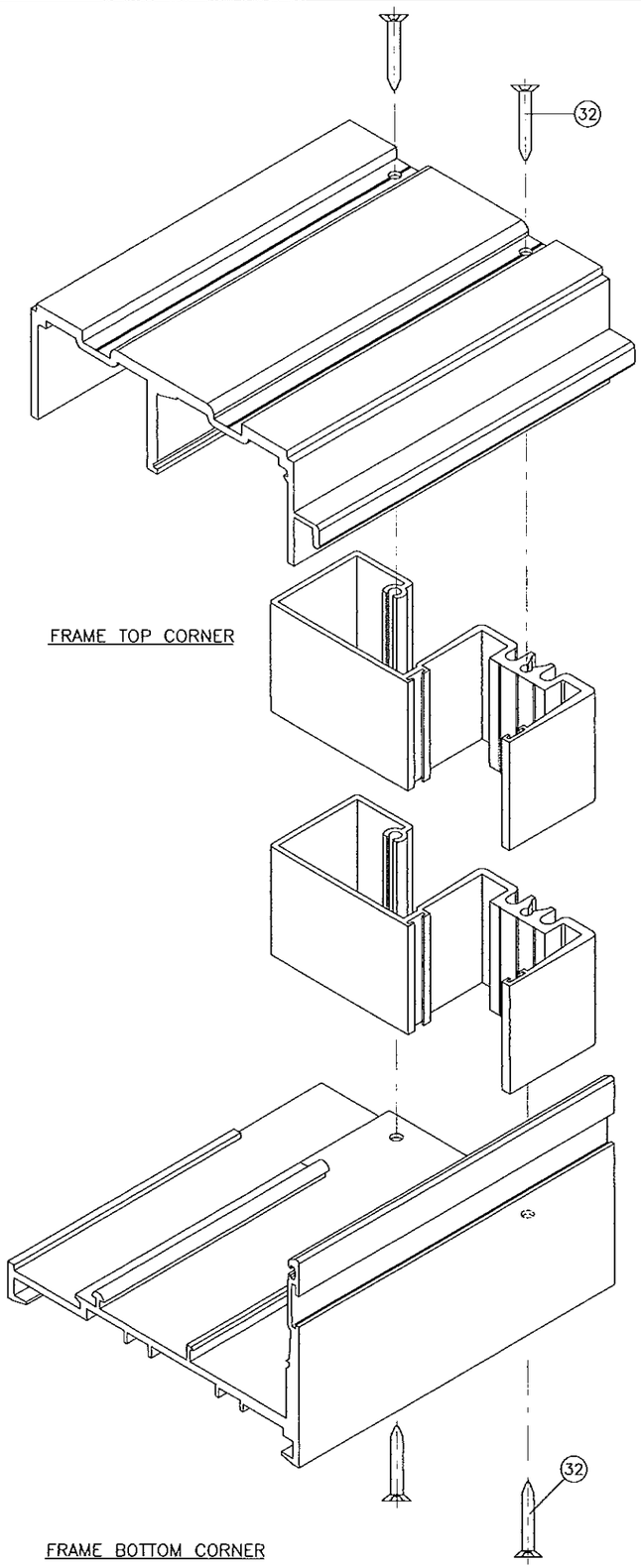

FRAME TOP CORNER

FRAME BOTTOM CORNER

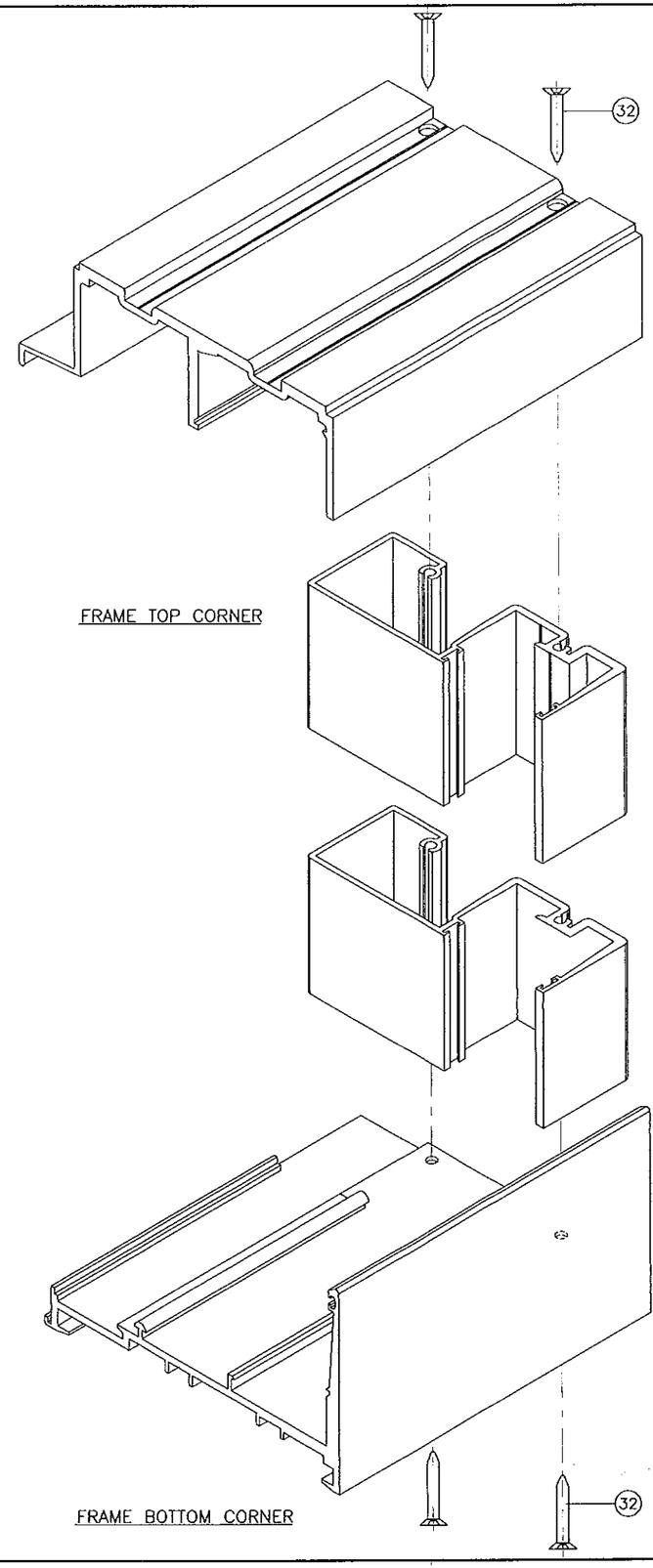

FRAME TOP CORNER

FRAME BOTTOM CORNER

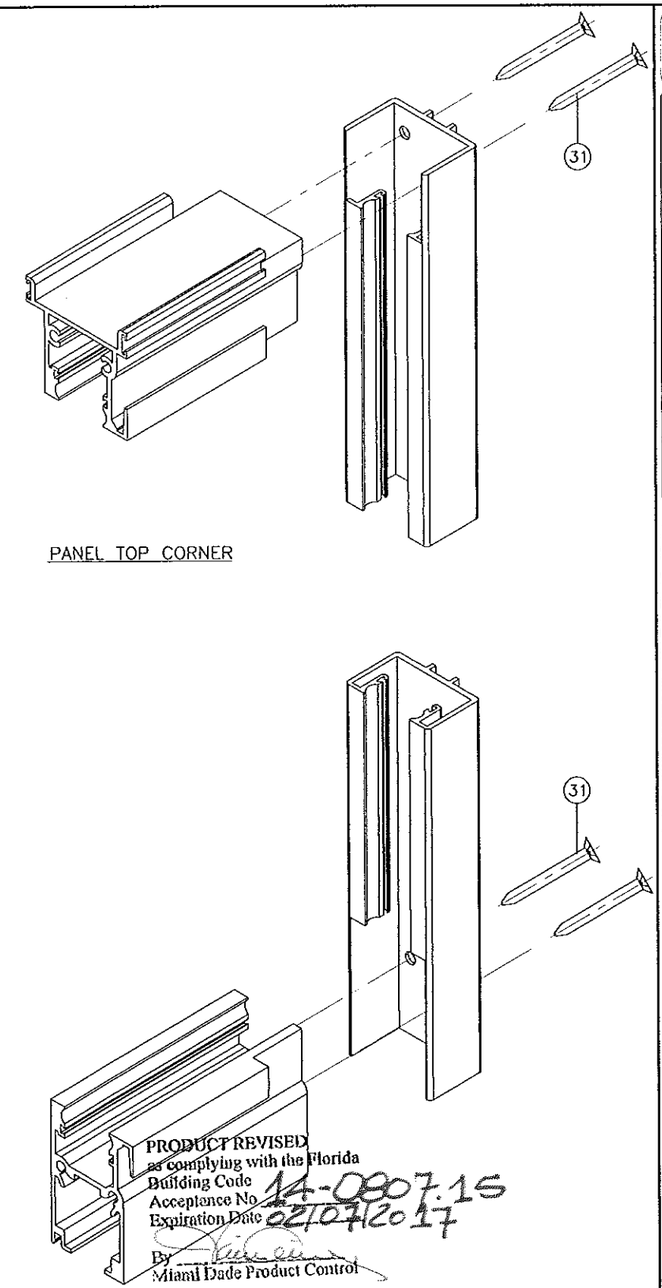

PANEL TOP CORNER

PANEL BOTTOM CORNER

PRODUCT REVISED
as complying with the Florida
Building Code
Acceptance No. 14-0807.15
Expiration Date 02/07/2017
By
Miami Dade Product Control

Engr: JAVAD AHMAD
CIVIL
FLA. PE # 70592
C.A.N. 3038

AUG 27 2014

AL-FAROOQ CORPORATION
ENGINEERS & PRODUCT DEVELOPMENT
1235 S.W. 87 AVE
MIAMI, FLORIDA 33174
TEL. (305) 264-8100 FAX. (305) 262-6978

COMP-ANL\W01-54RC

SERIES-2400ST ALUM SLD. GLASS DOOR (S.M.I.)

TECNOGLASS, LLC
5220 N.W. 72 AVE. BAY #4
MIAMI, FL. 33166
TEL. (305) 624-7775 FAX. (305) 624-7777

revisions:

no	date	by	description
K	12.31.08		REV. PER BCCO COMMENTS
L	08.21.09		NO CHANGE THIS SHEET
M	09.14.09		NO CHANGE THIS SHEET
N	11.08.11		UPDATED TO 2010 FBC
O	08.01.14		MANUF. NAME REV.

date: 08-17-01
scale: 1/2" = 1"
dr. by: HAMID
chk. by:

drawing no.
W01-54

sheet 10 of 10