MIAMI-DADE COUNTY
DEPARTMENT OF REGULATORY AND ECONOMIC RESOURCES (RER)
BOARD AND CODE ADMINISTRATION DIVISION

MIAMI–DADE COUNTY, FLORIDA
PRODUCT CONTROL SECTION
11805 SW 26 Street, Room 208
T (786) 315–2590 F (786) 315–2599
www.miamidade.gov/economy

NOTICE OF ACCEPTANCE (NOA)

Pella Corporation
102 Main Street
Pella, IA 50219

SCOPE:

This NOA is being issued under the applicable rules and regulations governing the use of construction materials. The documentation submitted has been reviewed and accepted by Miami–Dade County RER–Product Control Section to be used in Miami–Dade County and other areas where allowed by the Authority Having Jurisdiction (AHJ).

This NOA shall not be valid after the expiration date stated below. The Miami–Dade County Product Control Section (In Miami–Dade County) and/ or the AHJ (in areas other than Miami–Dade County) reserve the right to have this product or material tested for quality assurance purposes. If this product or material fails to perform in the accepted manner, the manufacturer will incur the expense of such testing and the AHJ may immediately revoke, modify, or suspend the use of such product or material within their jurisdiction. RER reserves the right to revoke this acceptance, if it is determined by Miami–Dade County Product Control Section that this product or material fails to meet the requirements of the applicable building code.

This product is approved as described herein, and has been designed to comply with the Florida Building Code, including the High Velocity Hurricane Zone.

DESCRIPTION:

Series "HIG Impact Fixed Casement" Aluminum Clad Wood Fixed Casement Window – L.M.I.

APPROVAL DOCUMENT: Drawing No. **1519**, titled "HIG Aluminum Clad Impact Fixed Casement Window", sheets 01 through 06 of 06,, dated 03/23/07, with revision "**D1**" dated 08/05/14, prepared by W. W. Schaefer Engineering & Consulting, P. A., signed and sealed by Warren W. Schaefer, P. E., bearing the Miami–Dade County Product Control Section Revision stamp with the Notice of Acceptance number and Expiration date by the Miami–Dade County Product Control Section.

MISSILE IMPACT RATING: Large and Small Missile Impact Resistant

LABELING: Each unit shall bear a permanent label with the manufacturer's name or logo, city, state, series, and following statement: "Miami–Dade County Product Control Approved", unless otherwise noted herein.

RENEWAL of this NOA shall be considered after a renewal application has been filed and there has been no change in the applicable building code negatively affecting the performance of this product.

TERMINATION of this NOA will occur after the expiration date or if there has been a revision or change in the materials, use, and/ or manufacture of the product or process. Misuse of this NOA as an endorsement of any product, for sales, advertising or any other purposes shall automatically terminate this NOA. Failure to comply with any section of this NOA shall be cause for termination and removal of NOA.

ADVERTISEMENT: The NOA number preceded by the words Miami–Dade County, Florida, and followed by the expiration date may be displayed in advertising literature. If any portion of the NOA is displayed, then it shall be done in its entirety.

INSPECTION: A copy of this entire NOA shall be provided to the user by the manufacturer or its distributors and shall be available for inspection at the job site at the request of the Building Official.

This NOA **revises NOA No. 14–0428.12** and consists of this page 1 and evidence pages E–1, E–2 and E–3, as well as approval document mentioned above.

The submitted documentation was reviewed by **Jaime D. Gascon, P. E.**

MIAMI-DADE COUNTY APPROVED

J. GAscon
10/9/14

Pella Corporation

NOTICE OF ACCEPTANCE: EVIDENCE SUBMITTED

A. DRAWINGS

1. Manufacturer's die drawings and sections.
2. Drawing No. **1519**, titled "HIG Aluminum Clad Impact Fixed Casement Window", sheets 01 through 06 of 06, dated 03/23/07, with revision "**D1**" dated 08/05/14, prepared by W. W. Schaefer Engineering & Consulting, P. A., signed and sealed by Warren W. Schaefer, P. E.

B. TESTS

1. Test reports on: 1) Large Missile Impact Test per FBC, TAS 201–94
   2) Cyclic Wind Pressure Loading per FBC, TAS 203–94

   along with marked–up drawings and installation diagram of series/ model HIG IG/ monolithic aluminum clad wood awning window mulled jamb to jamb to an aluminum clad wood fixed window, prepared by Element Materials Technology, Inc., Test Report No. **ESP–017244P.Fixed Casement.Dade**, dated 07/18/14, signed and sealed by Jason Steen, P. E.
2. Test reports on: 1) Air Infiltration Test, per FBC, TAS 202–94
   3) Uniform Static Air Pressure Test, Loading per FBC, TAS 202–94
   4) Water Resistance Test, per FBC, TAS 202–94
   5) Large Missile Impact Test per FBC, TAS 201–94
   6) Cyclic Wind Pressure Loading per FBC, TAS 203–94

   along with marked–up drawings and installation diagram of series/ model HIG IG/ monolithic aluminum clad wood awning window mulled jamb to jamb to an aluminum clad wood fixed window, prepared by Element Materials Technology, Inc., Test Report No. **ESP–014011P.Fixed Casement.Dade**, dated 07/25/13, signed and sealed by Thomas A. Kolden, P. E.

   (Submitted under previous NOA No. 13–0829.19)
3. Test reports on: 1) Air Infiltration Test, per FBC, TAS 202–94
   2) Uniform Static Air Pressure Test, Loading per FBC, TAS 202–94
   3) Water Resistance Test, per FBC, TAS 202–94
   4) Large Missile Impact Test per FBC, TAS 201–94
   5) Cyclic Wind Pressure Loading per FBC, TAS 203–94
   6) Forced Entry Test, per FBC 2411.3.2.1, and TAS 202–94

   along with marked–up drawings and installation diagram of series/model HIG IG/monolithic aluminum clad wood casement window mulled jamb to jamb to an aluminum clad wood fixed window, prepared by Architectural Testing, Inc., Test Report No. **ATI–71262.08–201–18**, dated 05/27/07, signed and sealed by Joseph A. Reed, P.E.

   (Submitted under previous NOA No. 07–0619.13)

Jaime D. Gascon, P.E.
Product Control Section Supervisor
NOA No. 14–0811.25
Expiration Date: November 08, 2017
Approval Date: October 09, 2014

NOTICE OF ACCEPTANCE: EVIDENCE SUBMITTED

B. TESTS (CONTINUED)

4. Test reports on: 1) Air Infiltration Test, per FBC, TAS 202–94
2) Uniform Static Air Pressure Test, Loading per FBC, TAS 202–94
3) Water Resistance Test, per FBC, TAS 202–94

along with marked–up drawings and installation diagram of series/ model HIG IG/ monolithic Aluminum clad wood casement window mulled jamb to jamb to an aluminum clad wood fixed window, prepared by Architectural Testing, Inc., Test Report No. **ATI–93260.01–201–18**, dated 09/15/09, signed and sealed by Joseph A. Reed, P.E.

(Submitted under previous NOA No. 09–1027.06)

5. Test reports on: 1) Large Missile Impact Test per FBC, TAS 201–94
2) Cyclic Wind Pressure Loading per FBC, TAS 203–94

along with marked–up drawings and installation diagram of series/model HIG IG/monolithic aluminum clad wood casement window mulled jamb to jamb to an aluminum clad wood fixed window, prepared by Architectural Testing, Inc., Test Report No. **ATI–93328.01–201–18**, dated 08/24/09, signed and sealed by Joseph A. Reed, P.E.

(Submitted under previous NOA No. 09–1027.06)

C. CALCULATIONS

1. Anchor verification calculations and structural analysis, complying with FBC, dated 10/21/11, prepared by W. W. Schaefer Engineering & Consulting, P. A., signed and sealed by Warren W. Schaefer, P. E.

(Submitted under previous NOA No. 12–0620.12)

2. Glazing complies with ASTM E1300–04/ 09

D. QUALITY ASSURANCE

1. Miami–Dade Department of Regulatory and Economic Resources (RER).

E. MATERIAL CERTIFICATIONS

1. Notice of Acceptance No. **13–0129.27** issued to **E.I. DuPont DeNemours & Co., Inc.** for their **"DuPont Butacite® PVB Interlayer"** dated 04/11/13, expiring on 12/11/16.

2. Notice of Acceptance No. **11–0624.02** issued to **E.I. DuPont DeNemours & Co.**, Inc. for their **"DuPont SentryGlas® Interlayer"** dated 08/25/11, expiring on 01/14/17.

3. Material–/ Technical Data Sheet for **"Manus–Bond 25–AM Structural Adhesive For Interior Glazing"**, issued by Manus Products, Inc.

Jaime D. Gascon, P. E.
Product Control Section Supervisor
NOA No. 14–0811.25
Expiration Date: November 08, 2017
Approval Date: October 09, 2014

NOTICE OF ACCEPTANCE: EVIDENCE SUBMITTED

F. STATEMENTS

1. Laboratory compliance letter for Test Report No. **ESP–017244P.Fixed Casement. Dade** issued by Element Materials Technology, Inc., dated 07/18/14, signed and sealed by Jason Steen, P. E.
2. Proposal issued by Product Control, 10/02/13, signed by Jaime D. Gascon, P. E.
3. Statement letter of conformance and complying with **FBC 5th Edition (2014)**, prepared by W. W. Schaefer Engineering & Consulting, P. A., dated 04/15/14, signed and sealed by Warren W. Schaefer, P. E.
4. Laboratory compliance letter for Test Report No. **ESP–014011P.Fixed Casement. Dade** issued by Element Materials Technology, Inc., dated 07/25/13, signed and sealed by Thomas A. Kolden, P. E.
   (Submitted under previous NOA No. 13–0829.19)
5. Proposal issued by Product Control, 03/26/13, signed by Jaime D. Gascon, P. E.
   (Submitted under previous NOA No. 13–0829.19)
6. Statement letter of conformance and complying with **FBC–2010**, dated 10/21/11, signed and sealed by Warren W. Schaefer, P. E.
   (Submitted under previous NOA No. 12–0620.12)
7. Statement letter of no financial interest, dated 10/19/11, signed and sealed by Warren W. Schaefer, P. E.
   (Submitted under previous NOA No. 12–0620.12)
8. Laboratory compliance letters for Test Reports No.'s **ATI–93260.01–201–18, ATI–93328.01–201–18** and **ATI–71262.08–201–18**, all issued by Architectural Testing, Inc., dated 09/15/09 and 08/25/09, all signed and sealed by Joseph A. Reed, P. E.
   (Submitted under previous NOA's No.'s 07–0619.13 and 09–1027.06)

G. OTHERS

1. Notice of Acceptance No. **14–0428.12**, issued to Pella Corporation for their Series "**HIG Fixed Casement Aluminum Clad Wood Fixed Window – L.M.I.**", approved on 06/26/14 and expiring on 11/08/17.

Jaime D. Gascon, P. E.
Product Control Section Supervisor
NOA No. 14–0811.25
Expiration Date: November 08, 2017
Approval Date: October 09, 2014

GENERAL NOTES:

1. THESE WINDOW SYSTEMS HAVE BEEN TESTED, ANALYZED & APPROVED FOR DESIGN PRESSURES NOT TO EXCEED THOSE SHOWN IN THE "ALLOWABLE DESIGN PRESSURE TABLE(S)".
2. OPENINGS, BUCKING & BUCKING FASTENERS MUST BE PROPERLY DESIGNED & INSTALLED TO TRANSFER WIND LOADS TO THE STRUCTURE.
3. ALL HARDWARE & FASTENERS SHALL BE IN ACCORDANCE WITH THESE DRAWINGS & SHALL NOT VARY UNLESS SPECIFICALLY MENTIONED ON THE DRAWINGS. SPECIFIED ANCHOR EMBED TO BASE MATERIAL SHALL BE BEYOND WALL FINISH OR STUCCO.
4. THE DETAILS & SPECIFICATIONS SHOWN HEREIN REPRESENT THE PRODUCTS TESTED & PROPOSED FOR WATER, AIR, IMPACT, CYCLIC & UNIFORM STATIC AIR PRESSURE TESTING IN CONFORMANCE WITH THE FLORIDA BUILDING CODE PROTOCOLS TAS-201, 202 & 203 FOR LARGE MISSILE IMPACT WINDOWS.
5. THESE WINDOW SYSTEMS HAVE BEEN DESIGNED IN ACCORDANCE WITH AND MEET THE REQUIREMENTS OF THE FLORIDA BUILDING CODE (FBC) INCLUDING HIGH VELOCITY HURRICANE ZONES (HVHZ).
6. IMPACT SHUTTERS ARE NOT REQUIRED WITH THESE WINDOWS.
7. ALL ANCHORS SECURING WINDOW FRAME TO PRESSURE TREATED BUCKS OR WOOD FRAMING SHALL BE CAPABLE OF RESISTING CORROSION CAUSED BY THE PRESSURE TREATING CHEMICALS IN THE WOOD.
8. DETERMINE THE POSITIVE & NEGATIVE DESIGN LOADS TO USE WHEN REFERENCING THESE DOCUMENTS IN ACCORDANCE WITH THE GOVERNING CODE AND GOVERNING WIND VELOCITY. FOR WIND LOAD CALCULATIONS IN ACCORDANCE WITH THE FLORIDA BUILDING CODE, A DIRECTIONALITY FACTOR OF KD = 0.85 MAY BE APPLIED PER THE ASCE--7 STANDARD.
9. NO INCREASE IN ALLOWABLE STRESS HAS BEEN USED IN THE CERTIFICATION OF THIS PRODUCT. WIND LOAD DURATION FACTOR CD = 1.6 WAS USED FOR WOOD SCREW ANALYSIS ONLY.
10. MATERIALS, INCLUDING BUT NOT LIMITED TO STEEL SCREWS, THAT COME INTO CONTACT WITH OTHER DISSIMILAR MATERIALS SHALL MEET THE REQUIREMENTS OF FLORIDA BUILDING CODE CHAPTER 20.
11. ALL WOOD MEMBERS OF WINDOWS THAT MAY POSSIBLY COME INTO CONTACT WITH MASONRY OR CONCRETE SUBSTRATES, ARE SUBJECT TO MOISTURE &/OR ARE SUBJECT TO THE OUTSIDE ENVIRONMENT SHALL BE OF AN APPROVED DURABLE SPECIES OR BE TREATED IN AN APPROVED METHOD WITH AN APPROVED PRESERVATIVE PER FBC SECTION 2326.

CORNER CONSTRUCTION

FRAME CORNERS: THE SIDE WOOD MEMBERS ARE BUTTED TO THE HEAD & SILL MEMBERS & SECURED WITH THREE(3) 14 GAGE 7/16" X 2 1/2" STAPLES. CLADDING IS MITERED TOGETHER, JOINED WITH A PLASTIC CORNER KEY PART NO. 77U00000 & SEALED WITH BUTYL DEVAN 578.12 OR BOSTIK 900 POLYURETHANE SEALANT. EACH CLADDING MEMBER IS SECURED TO THE KEY WITH 1 NO. 10 X 17/32" FH SCREW (2 TOTAL PER CORNER)

SASH CORNERS:

OPTION 1: MORTISE & TENON CONSTRUCTION. A 1/8" BEAD OF BOSTIK CHEM-CALK URETHANE IS PLACED AT THE TENNON BOTTOM SURFACE. WOOD GLUE IS PLACED AT THE TENNON SIDES. THE JOINT IS THEN ASSEMBLED & SECURED WITH ONE 15 GA. X 1 1/2" FINISH NAIL.

OPTION 2: SCREWED CONSTRUCTION. MEMBER ENDS ARE PROFILED AND PARTIALLY TENONED, BUTTED & ADHERED TOGETHER WITH BOSTIC 70-05/70-05A AND THEN SECURED WITH NO. 12 X 4" FH WOOD SCREWS (1 SCREW WITH SASH HEIGHTS LESS THAN 3.5"; 2 SCREWS WITH SASH HEIGHTS 3.5" TO 5 3/8"). THE CLADDING IS TABBED WITH THE TABS MEETING IN A BED OF BOSTIC IN A GROOVE ON THE EXTERIOR SASH FACE RESULTING FROM THE PARTIALLY TENNONED RAIL END.

SASH CORNER OPTION 2 WINDOWS ARE LIMITED TO MAXIMUM +/-60 PSF DESIGN PRESSURE (SEE PRESSURE NOTE ON SHEET 2)

FRAME ANCHOR REQUIREMENTS TABLE

OPENING TYPE (SUBSTRATE)	FRAME/CLIP/NAIL FIN TO OPENING FASTENER TYPE	MINIMUM EMBED	MINIMUM EDGE DIST.
FRAME SCREWS			
MIN. 2X4 WOOD FRAME OR BUCK (MIN. GR. 3 & G=0.55)	NO. 10 SMS OR WOOD SCREW	1 1/4"	3/4"
MIN. 18 GA. 33 KSI METAL STUD	NO. 10 SELF TAP/DRILLING SCREW	FULL	1/2"
MIN. 1/8" THK A36 STEEL	NO. 10 SELF TAP/DRILLING SCREW	FULL	1/2"
MIN. 1/8" THK 6063-T5 ALUM.	NO. 10 SELF TAP/DRILLING SCREW	FULL	1/2"
C-90 CMU/2500 PSI CONCRETE	(1) 1/4" CONCRETE SCREW	1 1/4"	2"
INSTALLATION CLIP SCREWS			
MIN. 2X4 WOOD FRAME OR BUCK (MIN. GR. 3 & G=0.55)	NO. 8 X 1 1/2" SMS	1 3/8"	1/2"
MIN. 1/8" THK A36 STEEL	NO. 8 SELF TAP/DRILLING SCREW	FULL	1/2"
MIN. 1/8" THK 6063-T5 ALUM.	NO. 8 SELF TAP/DRILLING SCREW	FULL	1/2"
(2) NAILING FIN FASTENERS			
MIN. 2X4 WOOD FRAME OR BUCK (MIN. GR. 3 & G=0.55)	NO. 8 X 1 1/2" SMS	1 3/8"	1/2"
MIN. 2X4 WOOD FRAME OR BUCK (MIN. GR. 3 & G=0.55)	2" X 11 GA. ROOFING NAIL	1 7/8"	1/2"
MIN. 1/8" THK A36 STEEL	NO. 8 SELF TAP/DRILLING SCREW	FULL	1/2"
MIN. 1/8" THK 6063-T5 ALUM.	NO. 8 SELF TAP/DRILLING SCREW	FULL	1/2"

(1) CONCRETE SCREWS SHALL BE ELCO ULTRACONS (C.S.), ELCO CRETE-FLEX (S.S.), ITW RAMSET/RED HEAD TAPCONS (C.S. OR S.S.) OR HILTI KWIK-CON II (C.S OR S.S.).

(2) WHEN SCREWS ARE USED WITH THE NAIL FIN, THEY MUST BE A WAFFLE HEAD SCREW OR HAVE A FLAT WASHER AT THE SCREW HEAD.

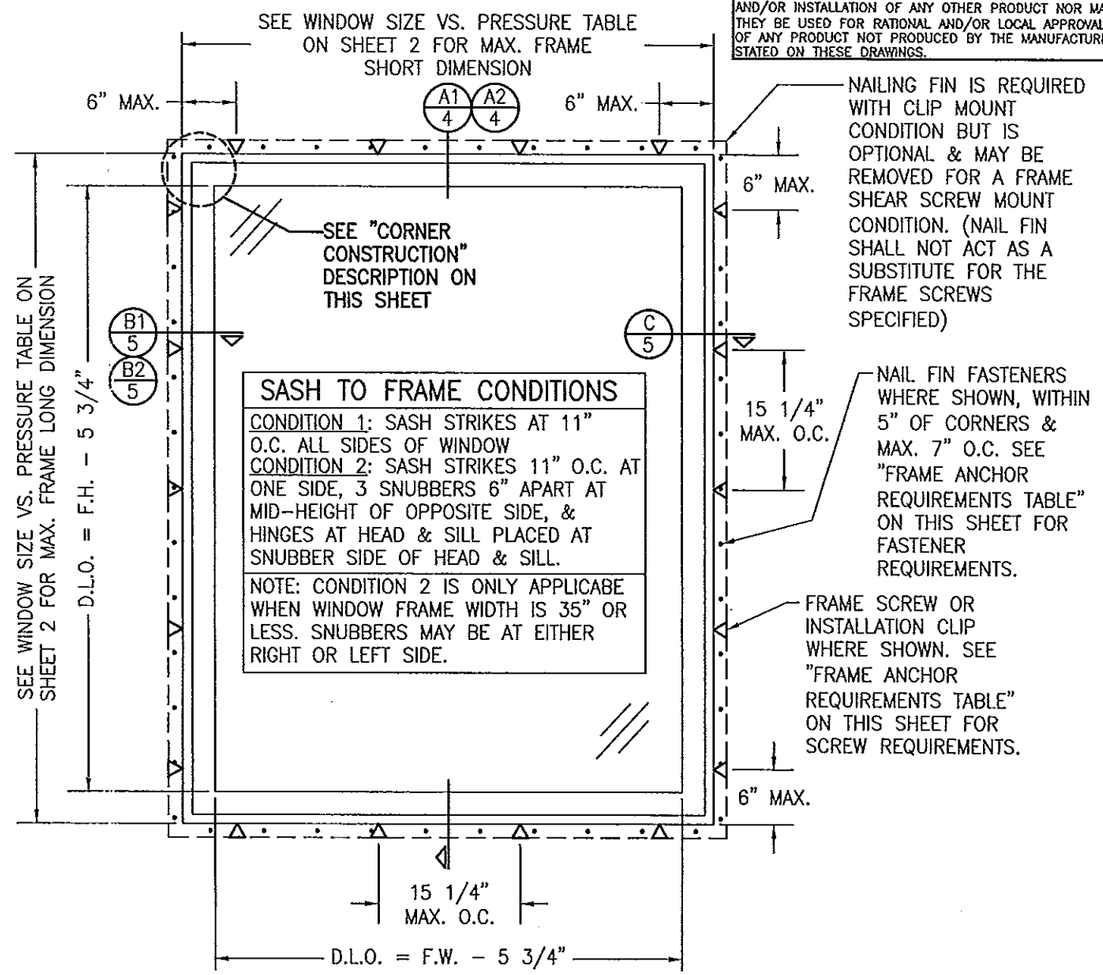

SASH TO FRAME CONDITIONS

CONDITION 1: SASH STRIKES AT 11" O.C. ALL SIDES OF WINDOW

CONDITION 2: SASH STRIKES 11" O.C. AT ONE SIDE, 3 SNUBBERS 6" APART AT MID-HEIGHT OF OPPOSITE SIDE, & HINGES AT HEAD & SILL PLACED AT SNUBBER SIDE OF HEAD & SILL.

NOTE: CONDITION 2 IS ONLY APPLICABE WHEN WINDOW FRAME WIDTH IS 35" OR LESS. SNUBBERS MAY BE AT EITHER RIGHT OR LEFT SIDE.

EXTERIOR ELEVATION:
SINGLE FIXED CASEMENT WINDOW
SCALE: 3/4" = 1'-0"

ALLOWABLE DESIGN PRESSURE
SEE LOAD TABLES ON SHEET 2

PRODUCT REVISED
as complying with the Florida
Building Code
Acceptance No 14-0811.25
Expiration Date 11/08/2017
By
Miami Dade Product Control

THESE DRAWINGS ARE APPLICABLE ONLY TO THE PRODUCT SPECIFIED. THEY MAY NOT BE USED FOR THE ASSEMBLY AND/OR INSTALLATION OF ANY OTHER PRODUCT NOR MAY THEY BE USED FOR RATIONAL AND/OR LOCAL APPROVAL OF ANY PRODUCT NOT PRODUCED BY THE MANUFACTURER STATED ON THESE DRAWINGS.

DRAWN BY: W.R.M. | CHECKED BY: W.W.S.
PLOT: 1=16 | DATE: 03/23/07

NO.	REVISION DESCRIPTION	BY	DATE
A1	UPDATE PER NEW TESTING AND CURRENT STANDARDS	WRM	09/30/09
B1	UPDATE CURRENT STANDARDS	WRM	10/21/11
C1	UPDATE TO PER NEW TESTING	WRM	06/27/13
D1	ADDED NEW GLAZING SEALANT	WWS	08/05/14

DRAWING TITLE
HIG ALUMINUM CLAD IMPACT FIXED CASEMENT WINDOW

MANUFACTURER
PELLA CORPORATION
102 MAIN STREET
PELLA, IA 50219
641-621-1000

CONSULTANTS
W. W. SCHAEFER ENGINEERING & CONSULTING, P.A. (CA 6809)
7480 150TH COURT NORTH
PALM BEACH GARDENS, FL 33418
PHONE: 561-744-3424

CERTIFICATION
AUG 05 2014
WARREN W. SCHAEFER, P.E.
P.E. NO. 44135

DRAWING NO. 1519 | REV. D
SHEET NO. 1 OF 6

ALLOWABLE WINDOW SIZE VS. PRESSURE TABLE (SINGLE WINDOWS)

(SEE PRESSURE NOTE BELOW TABLE)

MAXIMUM FRAME LONG DIMENSION (IN.)	MAXIMUM FRAME SHORT DIMENSION (IN.)	ALLOWABLE PRESSURE (PSF) GLASS OPTION A & C POS.	A & C NEG.	B & D POS.	B & D NEG.	E POS.	E NEG.
144	29	N/A	N/A	75.0	75.0	N/A	N/A
	26	N/A	N/A	75.0	85.0	N/A	N/A
	17	75.0	75.0	75.0	85.0	N/A	N/A
132	32	N/A	N/A	75.0	75.0	N/A	N/A
	29	N/A	N/A	75.0	85.0	N/A	N/A
	19	75.0	75.0	75.0	85.0	N/A	N/A
	17	75.0	75.0	75.0	85.0	N/A	N/A
120	35	N/A	N/A	75.0	75.0	N/A	N/A
	32	N/A	N/A	75.0	84.9	N/A	N/A
	21	75.0	75.0	75.0	85.0	N/A	N/A
	19	75.0	75.0	75.0	85.0	74.8	74.8
108	39	N/A	N/A	75.0	75.0	N/A	N/A
	35	N/A	N/A	75.0	85.0	N/A	N/A
	23	75.0	75.0	75.0	85.0	N/A	N/A
	21	75.0	75.0	75.0	85.0	75.0	75.0
96	44	N/A	N/A	75.0	75.0	N/A	N/A
	39	N/A	N/A	75.0	85.0	N/A	N/A
	26	75.0	75.0	75.0	85.0	N/A	N/A
	23	75.0	75.0	75.0	85.0	75.0	75.0
84	50	N/A	N/A	75.0	75.0	N/A	N/A
	45	N/A	N/A	75.0	83.1	N/A	N/A
	41	N/A	N/A	75.0	85.0	N/A	N/A
	30	75.0	75.0	75.0	85.0	N/A	N/A
	27	75.0	75.0	75.0	85.0	(*)72.5	(*)72.5
	26	75.0	75.0	75.0	85.0	75.0	75.0
79	53	N/A	N/A	74.9	74.9	N/A	N/A
	48	N/A	N/A	75.0	82.0	N/A	N/A
	32	75.0	75.0	75.0	85.0	N/A	N/A
	28	75.0	75.0	75.0	85.0	(*)71.3	(*)71.3
	25	75.0	75.0	75.0	85.0	75.0	75.0

MAXIMUM FRAME LONG DIMENSION (IN.)	MAXIMUM FRAME SHORT DIMENSION (IN.)	ALLOWABLE PRESSURE (PSF) GLASS OPTION A & C POS.	A & C NEG.	B & D POS.	B & D NEG.	E POS.	E NEG.
73	59	N/A	N/A	75.0	75.0	N/A	N/A
	52	N/A	N/A	75.0	81.8	N/A	N/A
	48	N/A	N/A	75.0	85.0	N/A	N/A
	35	75.0	75.0	75.0	85.0	N/A	N/A
	31	75.0	75.0	75.0	85.0	(*)65.5	(*)65.5
	29	75.0	75.0	75.0	85.0	(*)71.3	(*)71.3
	25	75.0	75.0	75.0	85.0	75.0	75.0
71	60	N/A	N/A	75.0	75.0	N/A	N/A
	54	N/A	N/A	75.0	81.8	N/A	N/A
	49	N/A	N/A	75.0	85.0	N/A	N/A
	35	75.0	75.0	75.0	85.0	N/A	N/A
	32	75.0	75.0	75.0	85.0	(*)64.8	(*)64.8
	29	75.0	75.0	75.0	85.0	(*)73.4	(*)73.4
	25	75.0	75.0	75.0	85.0	75.0	75.0
65	65	N/A	N/A	75.0	75.0	N/A	N/A
	59	N/A	N/A	75.0	85.0	N/A	N/A
	39	73.1	73.1	75.0	85.0	N/A	N/A
	35	75.0	75.0	75.0	85.0	(*)69.6	(*)69.6
	32	75.0	75.0	75.0	85.0	(*)73.7	(*)73.7
	29	75.0	75.0	75.0	85.0	75.0	75.0
59	59	N/A	N/A	75.0	85.0	N/A	N/A
	43	73.0	73.0	75.0	85.0	N/A	N/A
	38	74.6	74.6	75.0	85.0	(*)73.2	(*)73.2
	36	75.0	75.0	75.0	85.0	75.0	75.0
53	53	N/A	N/A	75.0	85.0	75.0	75.0
	48	75.0	75.0	75.0	85.0	75.0	75.0
	42	75.0	75.0	75.0	85.0	75.0	75.0
47	47	75.0	75.0	75.0	85.0	75.0	75.0

NOTES:
1. SEE GLAZING DETAILS ON SHEET 4 FOR GLASS OPTIONS.
2. "N/A" DESIGNATES A SIZE NOT APPLICABLE TO THAT GLASS OPTION.
3. IF WINDOWS ARE MULLED TOGETHER, THE LESSER OF THE PRESSURE SPECIFIED IN THIS TABLE FOR THE INDIVIDUAL WINDOW(S) AND THAT SPECIFIED IN THE MULLION TABLE SHALL CONTROL FOR THE OVERALL UNIT.

PRODUCT REVISED
as complying with the Florida
Building Code
Acceptance No 14-0811.26
Expiration Date 11/08/2017
By
Miami Dade Product Control

(*) WHEN GLASS TYPE "E" USES 1/8" TEMPERED GLASS FOR THE EXTERIOR PANE OF GLASS IN LIEU OF 1/8" ANNEALED, THE ALLOWABLE PRESSURE ON THE WINDOW MAY BE INCREASED TO +/-75 PSF.

ALLOWABLE PRESSURE NOTE:
PRESSURES LISTED IN TABLE CONSIDER WINDOWS WITH SASH CORNER CONSTRUCTION OPTION 1. WHEN SASH CORNER CONSTRUCTION OPTION 2 IS USED, ALLOWABLE PRESSURE MAY NOT EXCEED +/-60 PSF REGARDLESS OF PRESSURES SHOWN IN TABLE.

DRAWN BY: W.R.W. | CHECKED BY: W.W.S.
PLOT: 1=16 | DATE: 03/23/07

NO.	REVISION DESCRIPTION	BY	DATE

DRAWING TITLE
HIG ALUMINUM CLAD IMPACT FIXED CASEMENT WINDOW

MANUFACTURER
PELLA CORPORATION
102 MAIN STREET
PELLA, IA 50219
641-621-1000

CONSULTANTS
W. W. SCHAEFER ENGINEERING & CONSULTING, P.A. (CA 6809)
7480 150TH COURT NORTH
PALM BEACH GARDENS, FL 33418
PHONE: 561-744-3424

CERTIFICATION
AUG 05 2014
WARREN W. SCHAEFER, P.E.
P.E. NO. 44135

DRAWING NO. 1519 | REV. D
SHEET NO. 2 OF 6

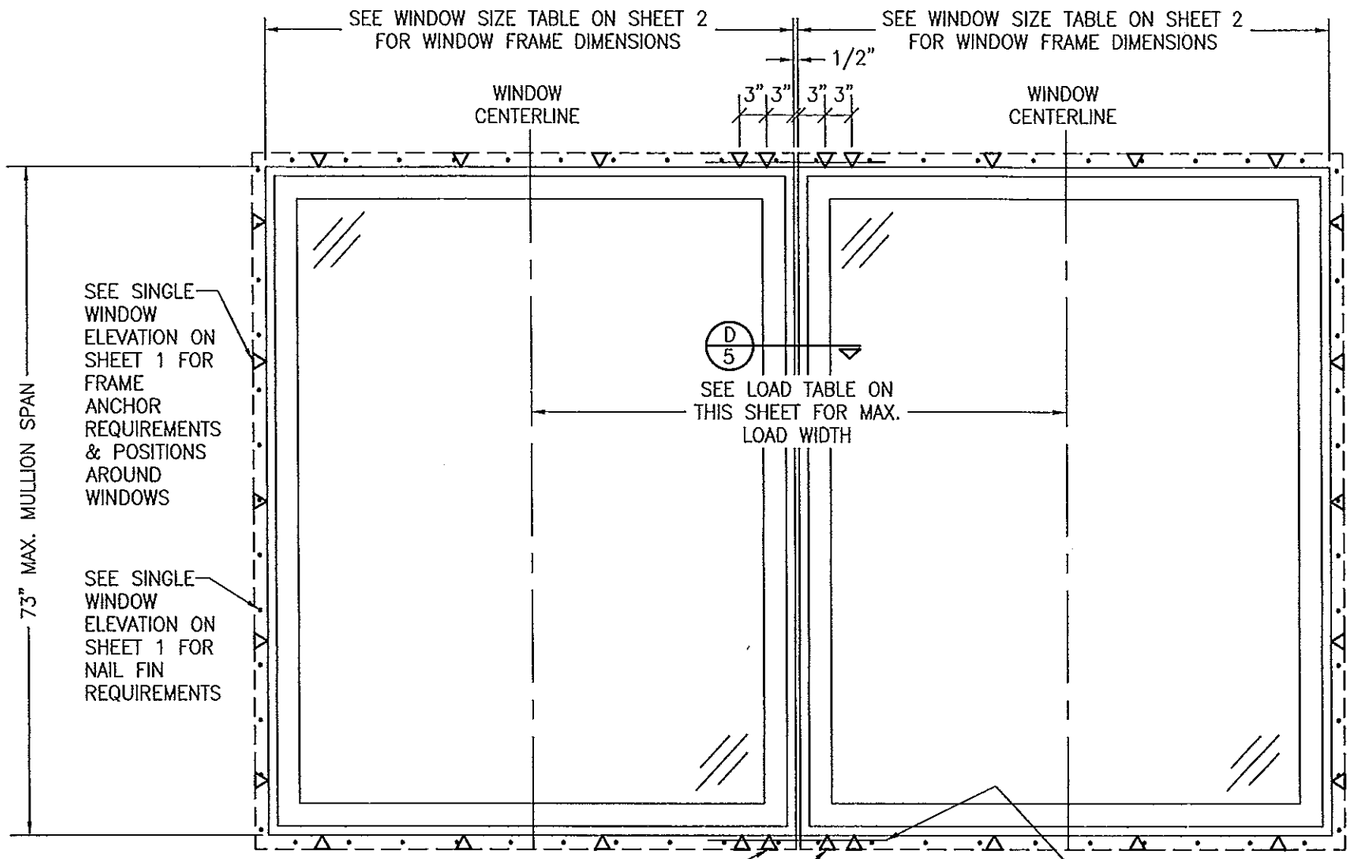

EXTERIOR ELEVATION: MULTIPLE FIXED CASEMENT WINDOWS

SCALE: 3/4" = 1'-0"

ALLOWABLE DESIGN PRESSURE TABLE (SIDE BY SIDE WINDOWS)

MAXIMUM MULLION SPAN (IN.)	MAXIMUM LOAD WIDTH (IN.)	ALLOWABLE PRESSURE (PSF)	
		POSITIVE	NEGATIVE
73	59.5	75.0	75.0
	53.5	75.0	78.0
	47.5	75.0	82.5
	41.5	75.0	85.0
71	59.5	75.0	78.6
	53.5	75.0	81.5
	47.5	75.0	85.0
65	65.5	75.0	85.0
59	59.5 & GREATER	75.0	85.0

NOTES:
1. LOAD WIDTH IS THE DISTANCE BETWEEN WINDOW CENTERLINES.
2. ALLOWABLE UNIT PRESSURE SHALL BE THE LESSER OF THE PRESSURES SHOWN IN THIS TABLE & THOSE SPECIFIED FOR THE INDIVIDUAL WINDOW.

MULTIPLE UNIT NOTES:

1. FOR ALL DETAIL NOT SHOWN, SEE SINGLE WINDOW ELEVATION.
2. MULLION MAY BE HORIZONTAL OR VERTICAL PROVIDING UNIT SIZES ARE RESTRICTED AS SHOWN IN THIS ELEVATION.
3. WINDOWS MAY BE STACKED HORIZONTAL OR VERTICAL. TO INSURE THAT THE DEAD WEIGHT OF THE ABOVE WINDOW(S) WILL NOT CAUSE UNDO STRESS ON THE BELOW WINDOW, WHEN VERTICALLY STACKED, THE MANUFACTURER/INSTALLER SHALL LIMIT THE SAG OF THE HORIZONTAL MULLION TO MAX. 1/8".
4. THERE IS NO LIMIT ON THE NUMBER OF WINDOWS THAT MAY BE COMBINED IN ONE DIRECTION INTO ONE OPENING PROVIDING THE OPENING IS DESIGNED TO SUPPORT ALL LOADS TRANSFERRED FROM THE WINDOWS & THEIR MULLIONS.
5. INDIVIDUAL WINDOW SIZES SHALL BE RESTRICTED AS SPECIFIED IN THE SINGLE WINDOW ELEVATION.

PRODUCT REVISED
as complying with the Florida
Building Code
Acceptance No 14-0811.25
Expiration Date 11/08/2017
By
Miami Dade Product Control

DRAWN BY: W.R.M.	CHECKED BY: W.W.S.
PLOT: 1=16	DATE: 03/23/07

NO.	REVISION DESCRIPTION	BY	DATE

DRAWING TITLE
HIG ALUMINUM CLAD IMPACT FIXED CASEMENT WINDOW

MANUFACTURER
PELLA CORPORATION
102 MAIN STREET
PELLA, IA 50219
641-621-1000

CONSULTANTS
W. W. SCHAEFER ENGINEERING & CONSULTING, P.A. (CA 6809)
7480 150TH COURT NORTH
PALM BEACH GARDENS, FL 33418
PHONE: 561-744-3424

CERTIFICATION
AUG 05 2014
WARREN W. SCHAEFER, P.E.
P.E. NO. 44135

DRAWING NO. 1519
REV. D
SHEET NO. 3 OF 6

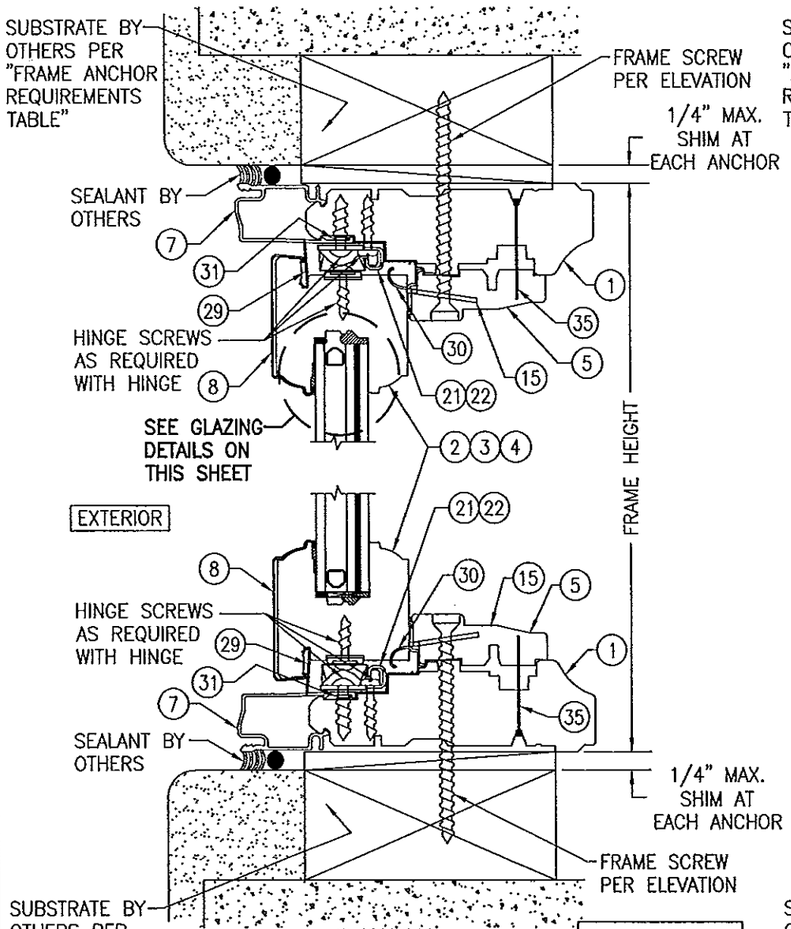

SECTION A1/4
SCALE: 1/2 FULL

SASH TO FRAME CONDITION 2

FRAME SCREW MOUNT SHOWN. SEE DETAILS ON SHEETS 5 & 6 FOR DIRECT MOUNT & CLIP MOUNT DETAILS.

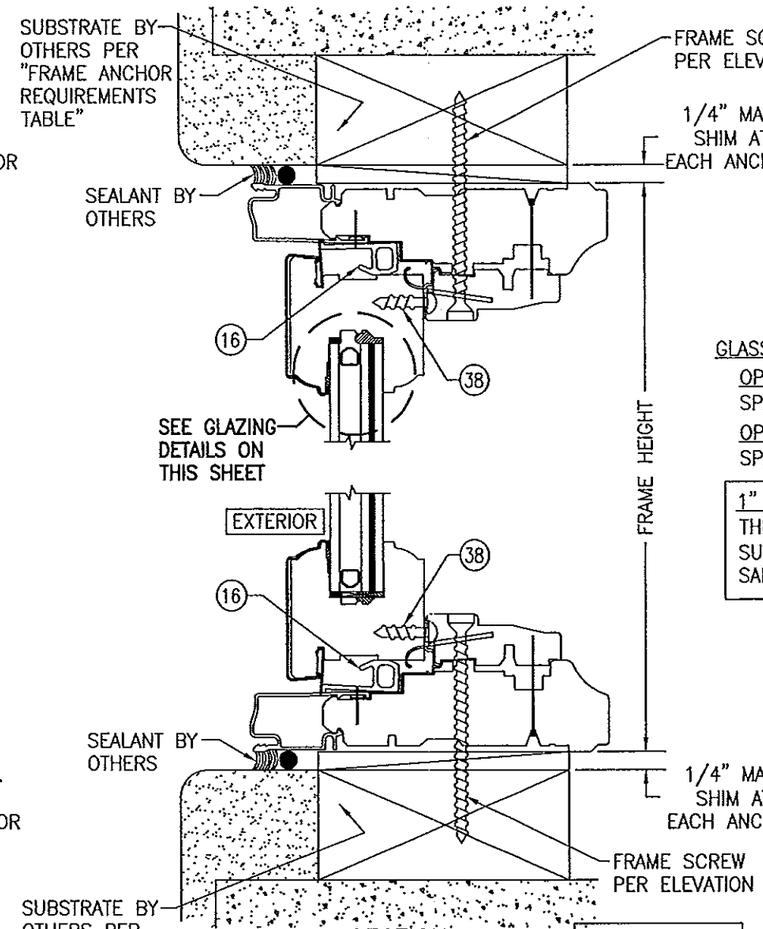

SECTION A2/4
SCALE: 1/2 FULL

SASH TO FRAME CONDITION 1

FRAME SCREW MOUNT SHOWN. SEE DETAILS ON SHEETS 5 & 6 FOR DIRECT MOUNT & CLIP MOUNT DETAILS.

(FOR DETAIL NOT SHOWN, SEE SECTION A1/4)

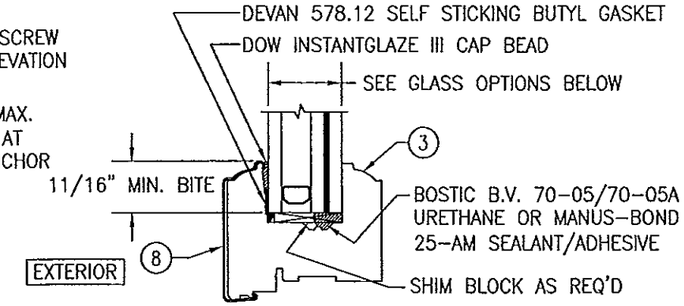

GLAZING DETAIL 2

GLASS OPTIONS:

OPTION C: 1" THICK LAMINATED I.G. GLASS (3/16" AN. EXTERIOR; 3/8" SPACER; 5/32" AN./0.09 DUPONT BUTACITE PVB/5/32" AN. INTERIOR)

OPTION D: 1" THICK LAMINATED I.G. GLASS (3/16" AN. EXTERIOR; 3/8" SPACER; 5/32" AN./0.09 DUPONT SG/5/32" AN. INTERIOR)

1" I.G. GLASS NOTE:
THE EXTERIOR 3/16" ANNEALED PANE OF GLASS MAY BE SUBSTITUTED WITH 3/16" TEMPERED WHEN REQUIRED TO MEET SAFETY REQUIREMENTS.

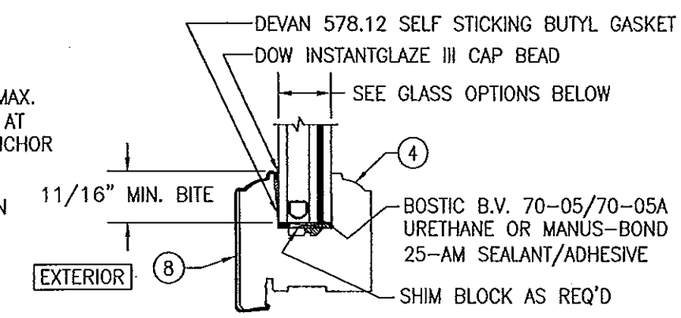

GLAZING DETAIL 3

GLASS OPTIONS:

OPTION E: 11/16" THICK LAMINATED I.G. GLASS (1/8" AN. EXTERIOR; 1/4" SPACER; 7/64" AN./0.09 DUPONT BUTACITE PVB/7/64" AN. INTERIOR)

11/16" I.G. GLASS NOTE:
THE EXTERIOR 1/8" ANNEALED PANE OF GLASS MAY BE SUBSTITUTED WITH 1/8" TEMPERED WHEN REQUIRED TO MEET SAFETY REQUIREMENTS.

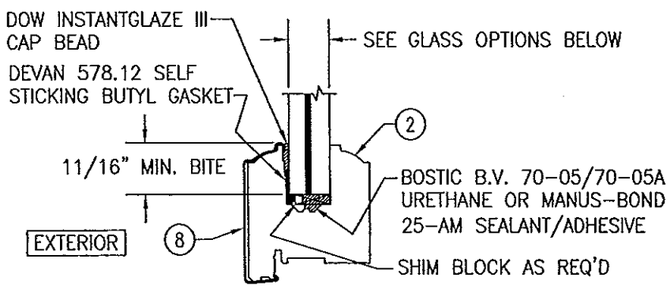

GLAZING DETAIL 1

GLASS OPTIONS:

OPTION A: 9/16" THICK LAMINATED GLASS (1/4" AN./0.09 DUPONT BUTACITE PVB/1/4" AN.)

OPTION B: 9/16" THICK LAMINATED GLASS (1/4" AN./0.09 DUPONT SG/1/4" AN.)

PRODUCT REVISED
as complying with the Florida Building Code
Acceptance No 14-0811.25
Expiration Date 11/08/2017
By
Miami Dade Product Control

NO.	REVISION DESCRIPTION	BY	DATE

DRAWN BY: W.R.M. | CHECKED BY: W.W.S.
PLOT: 1=2 | DATE: 03/23/07

DRAWING TITLE
HIG ALUMINUM CLAD IMPACT FIXED CASEMENT WINDOW

MANUFACTURER
PELLA CORPORATION
102 MAIN STREET
PELLA, IA 50219
641-621-1000

CONSULTANTS
W. W. SCHAEFER ENGINEERING & CONSULTING, P.A. (CA 6809)
7480 150TH COURT NORTH
PALM BEACH GARDENS, FL 33418
PHONE: 561-744-3424

CERTIFICATION
AUG 05 2014
WARREN W. SCHAEFER, P.E.
P.E. NO. 44135

DRAWING NO. 1519 | REV. D
SHEET NO. 4 OF 6

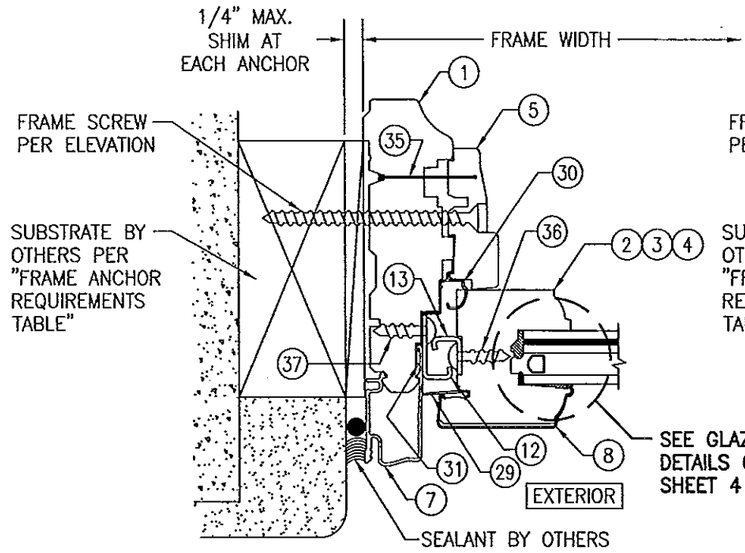

SECTION B1/5
SCALE: 1/2 FULL
SASH TO FRAME CONDITION 2

FRAME SCREW MOUNT SHOWN. SEE DETAILS ON THIS SHEET FOR DIRECT MOUNT DETAIL & SHEET 6 FOR CLIP MOUNT DETAIL.

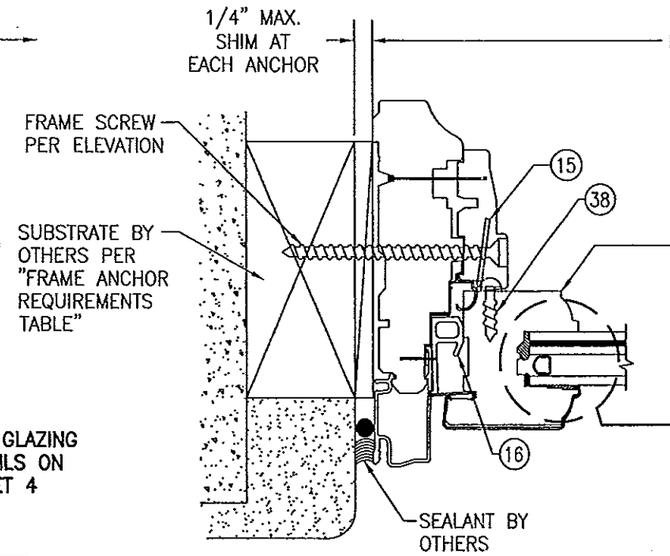

SECTION B2/5
SCALE: 1/2 FULL
SASH TO FRAME CONDITION 1

FRAME SCREW MOUNT SHOWN. SEE DETAILS ON THIS SHEET FOR DIRECT MOUNT DETAIL & SHEET 6 FOR CLIP MOUNT DETAIL.

(FOR DETAIL NOT SHOWN, SEE SECTION B1/5)

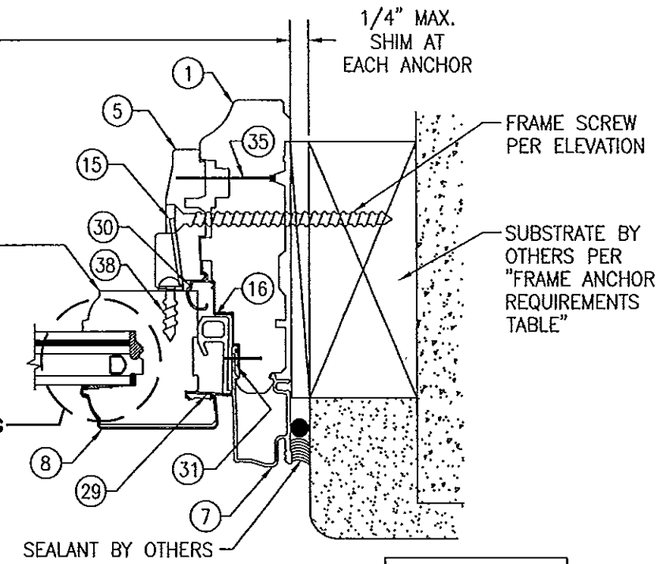

SECTION C/5
SCALE: 1/2 FULL
SASH TO FRAME CONDITION 1 & 2

FRAME SCREW MOUNT SHOWN. SEE DETAILS ON THIS SHEET FOR DIRECT MOUNT DETAIL & SHEET 6 FOR CLIP MOUNT DETAIL.

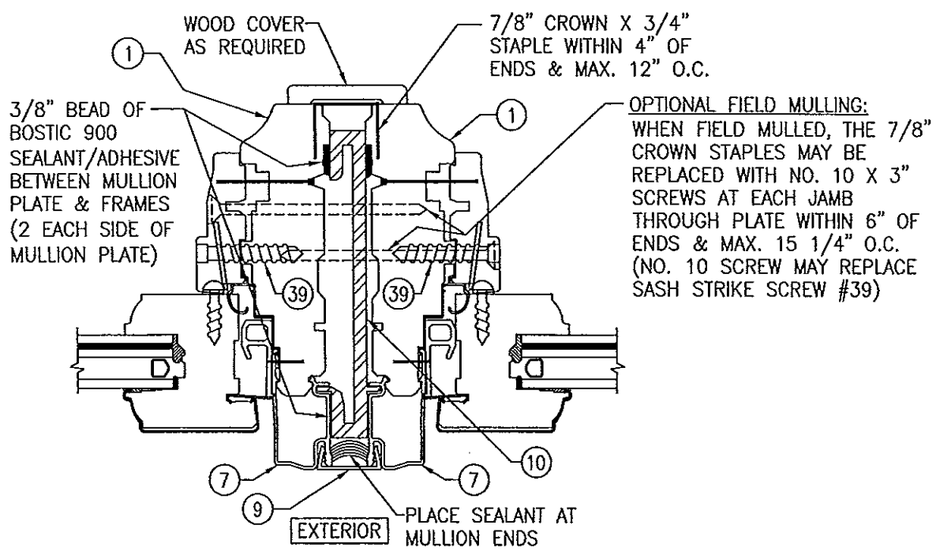

SECTION D/5
SCALE: 1/2 FULL
FOR DETAIL NOT SHOWN, SEE OTHER SECTIONS

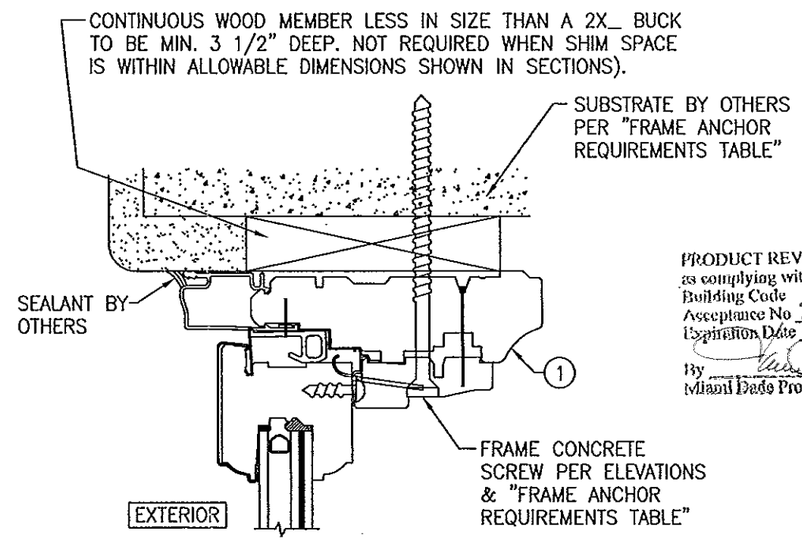

OPTIONAL DIRECT MOUNT DETAIL TO SUBSTRATE WITH SPACER

(HEAD SECTION SHOWN; SILL & SIDES ARE INSTALLED THE SAME)
(FOR DETAIL NOT SHOWN, SEE OTHER SECTIONS)

PRODUCT REVISED
as complying with the Florida Building Code
Acceptance No 14-0811.25
Expiration Date 11/08/2017
By
Miami Dade Product Control

DRAWN BY: W.R.M.	CHECKED BY: W.W.S.
PLOT: 1=2	DATE: 03/23/07

NO.	REVISION DESCRIPTION	BY	DATE

DRAWING TITLE
HIG ALUMINUM CLAD IMPACT FIXED CASEMENT WINDOW

MANUFACTURER
PELLA CORPORATION
102 MAIN STREET
PELLA, IA 50219
641-621-1000

CONSULTANTS
W. W. SCHAEFER ENGINEERING & CONSULTING, P.A. (CA 6809)
7480 150TH COURT NORTH
PALM BEACH GARDENS, FL 33418
PHONE: 561-744-3424

CERTIFICATION
AUG 05 2014
WARREN W. SCHAEFER, P.E.
P.E. NO. 44135

DRAWING NO. 1519
REV. D
SHEET NO. 5 OF 6

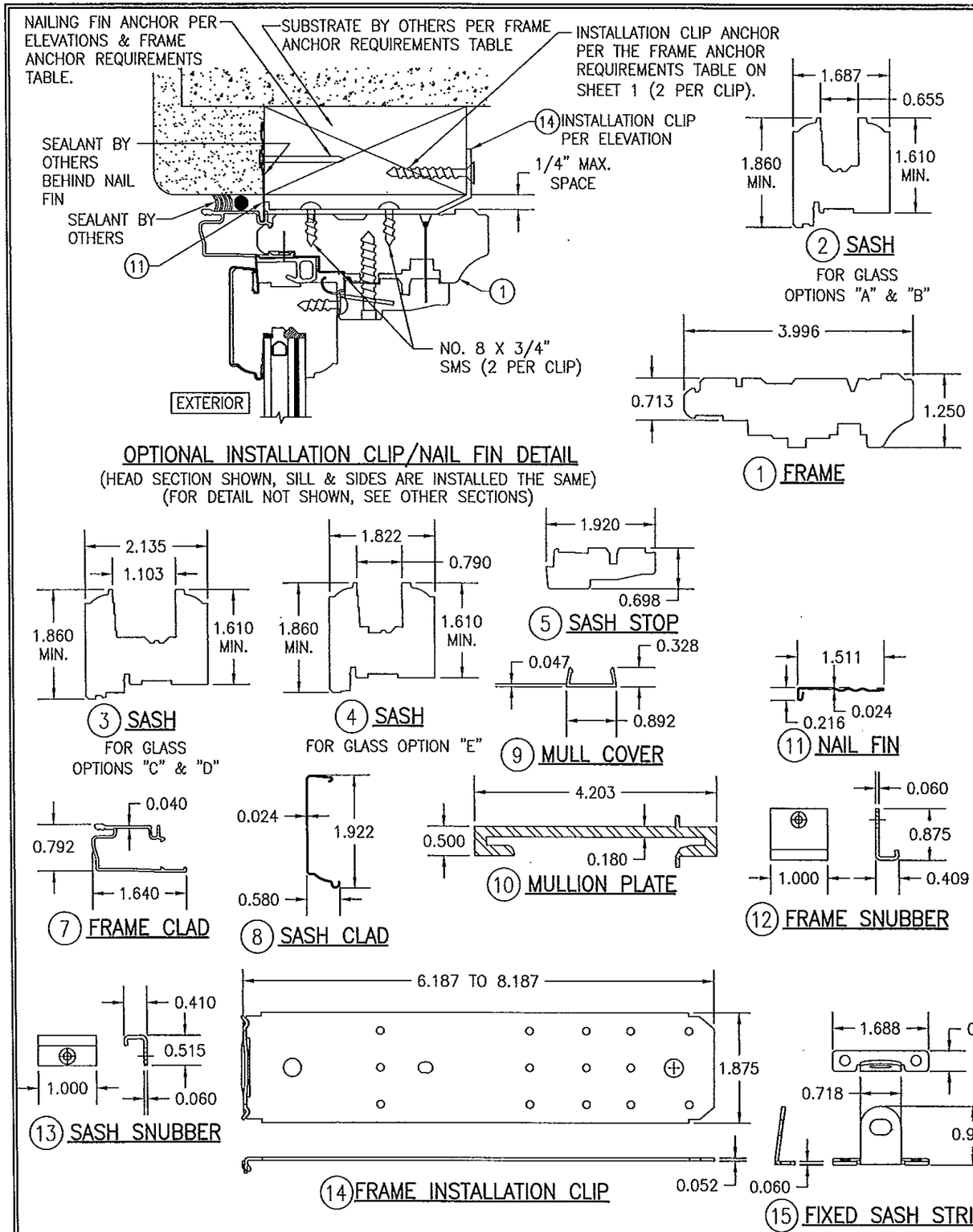

ITEM #	ITEM DESCRIPTION	MANUFACTURER/NOTES
	PARTS	
1	FRAME JAMB	WOOD
2	SASH FOR GLASS OPTION A & B	WOOD
3	SASH FOR GLASS OPTION C & D	WOOD
4	SASH FOR GLASS OPTION E	WOOD
5	SASH STOP	WOOD
7	FRAME CLAD	6063–T6 ALUMINUM
8	SASH CLAD	3003–H14 ALUMINUM
9	MULLION COVER	6063–T6 ALUMINUM
10	MULLION PLATE	6063–T6 ALUMINUM
11	NAIL FIN	3003–H14 ALUMINUM
12	FRAME SNUBBER	302/304 S.S. (3 PER WINDOW 6" APART)
13	SASH SNUBBER	302/304 S.S. (3 PER WINDOW 6" APART)
14	INSTALLATION CLIP	50 KSI GALVANIZED STEEL
15	FIXED SASH STRIKE	AT MAX. 11" O.C. (304 S.S.)
16	SASH SHIM BLOCK	PLASTIC (3 PER SIDE)
	HARDWARE	
21	CENTER PIVOT HINGE	OVERLAND 1AJC/1AJA
22	SCISSOR HINGE	PELLA 15EA/15E9 (16 GAGE 302/304 S.S.)
23	ROTO OPERATOR	PELLA #2AAX/2AAY
24	EGRESS OPERATOR	PELLA #2ABA
	SEALS & SEALANTS	
29	RAINSTRIP	PELLA PART #75T2 – PVC DUROMETER 75
30	WEATHERSTRIP	PELLA PART #505J – PP/SANTOPRENE 64
31	FRAME CLAD SEALANT	BUTYL
	MISCELLANEOUS FASTENERS	
35	1 3/8" 4D ANNULAR RINGSHANK BOX NAIL	WITHIN 5" OF CORNERS & 4" TO 9" O.C.
36	NO. 7 X 1" FH SCREW	1 PER SNUBBER
37	NO. 7 X 3/4" PH SCREW	1 PER SNUBBER
38	NO. 8 X 3/4" PH SCREW	2 PER SASH STRIKE
39	NO. 14 X 1 1/2" FILISTER HEAD SCREW	1 PER SASH STRIKE

NOTE: WOOD USED IN TESTING WAS WESTERN PINE WITH A SPECIFIC GRAVITY OF G = 0.43 AND A MODULUS OF ELASTICITY OF E = 1,200,000 PSI. OTHER WOOD SPECIES APPLICABLE FOR USE WITH THIS PRODUCT ARE THOSE WITH A SPECIFIC GRAVITY OF 0.43 AND MODULUS OF ELASTICITY OF 1,200,000 PSI OR GREATER. ALL WOOD IS MINIMUM GRADE 2 MILLED BY PELLA CORPORATION TO SELECT.

PRODUCT REVISED
as complying with the Florida
Building Code
Acceptance No 14-0811.25
Expiration/Date 11/08/2017
By
Miami Dade Product Control

DRAWN BY: W.R.M.	CHECKED BY: W.W.S.
PLOT: 1=2	DATE: 03/23/07

NO.	REVISION DESCRIPTION	BY	DATE

DRAWING TITLE
HIG ALUMINUM CLAD IMPACT FIXED CASEMENT WINDOW

MANUFACTURER
PELLA CORPORATION
102 MAIN STREET
PELLA, IA 50219
641–621–1000

CONSULTANTS
W. W. SCHAEFER ENGINEERING & CONSULTING, P.A. (CA 6809)
7480 150TH COURT NORTH
PALM BEACH GARDENS, FL 33418
PHONE: 561–744–3424

CERTIFICATION
AUG 05 2014
WARREN W. SCHAEFER, P.E.
P.E. NO. 44135

DRAWING NO. 1519
REV. D
SHEET NO. 6 OF 6