MIAMI-DADE COUNTY
PRODUCT CONTROL SECTION
11805 SW 26 Street, Room 208
Miami, Florida 33175-2474
T (786) 315-2590 F (786) 315-2599
www.miamidade.gov/economy

DEPARTMENT OF REGULATORY AND ECONOMIC RESOURCES (RER)
BOARD AND CODE ADMINISTRATION DIVISION

NOTICE OF ACCEPTANCE (NOA)

Schlage Lock Company
6810 Hillsdale Court
Indianapolis, IN 46250

SCOPE:

This NOA is being issued under the applicable rules and regulations governing the use of construction materials. The documentation submitted has been reviewed and accepted by Miami-Dade County RER -Product Control Section to be used in Miami Dade County and other areas where allowed by the Authority Having Jurisdiction (AHJ).

This NOA shall not be valid after the expiration date stated below. The Miami-Dade County Product Control Section (In Miami Dade County) and/or the AHJ (in areas other than Miami Dade County) reserve the right to have this product or material tested for quality assurance purposes. If this product or material fails to perform in the accepted manner, the manufacturer will incur the expense of such testing and the AHJ may immediately revoke, modify, or suspend the use of such product or material within their jurisdiction. RER reserves the right to revoke this acceptance, if it is determined by Miami-Dade County Product Control Section that this product or material fails to meet the requirements of the applicable building code.

This product is approved as described herein, and has been designed to comply with the Florida Building Code, including the High Velocity Hurricane Zone.

DESCRIPTION: Steelcraft Series "H16-4" Double Outswing glazed Steel Doors w / Sidelites & Transom

APPROVAL DOCUMENT: Drawing No **"975W" Rev E**, titled "H-16 4 FG 6070 outswing Doors w/ Sidelites & Transom", sheets 1 through 17 of 17, prepared by the manufacturer, dated 02-23-03 and last revised on 04/12/15, signed and sealed by Thomas Gordon, P.E., bearing the Miami-Dade County Product Control Revision stamp with the Notice of Acceptance number and expiration date by the Miami-Dade County Product Control Section.

MISSILE IMPACT RATING: Large and Small Missile Impact

Limitations:

1. See Design Pressures, Sizes and DLO (Day light Opening) limitations in sheets **1, 5, & 6** of the drawings.
2. Doors are not rated for Water infiltration, unless covered by overhang complying w/ FBC requirements.
3. Base anchors at both Jambs (detail **A**, sheet **10** or detail **D** sheet **12**) and Mullion base anchors (detail **B**, sheet **10**, **12** & **14**) are required, in addition to anchors at Sidelite detail **C**, in sheets **11**thru **14**.
4. Electrical/Electronic functions and Fire ratings are **not** part of this approval, such functions to be reviewed and approved by AHJ.

LABELING: Each unit shall bear a permanent label with the manufacturer's name or logo, Cincinnati, Ohio and Series and following statement: "Miami-Dade County Product Control Approved", unless otherwise noted herein.

RENEWAL of this NOA shall be considered after a renewal application has been filed and there has been no change in the applicable building code negatively affecting the performance of this product.

TERMINATION of this NOA will occur after the expiration date or if there has been a revision or change in the materials, use, and/or manufacture of the product or process. Misuse of this NOA as an endorsement of any product, for sales, advertising or any other purposes shall automatically terminate this NOA. Failure to comply with any section of this NOA shall be cause for termination and removal of NOA.

ADVERTISEMENT: The NOA number preceded by the words Miami-Dade County, Florida, and followed by the expiration date may be displayed in advertising literature. If any portion of the NOA is displayed, then it shall be done in its entirety.

INSPECTION: A copy of this entire NOA shall be provided to the user by the manufacturer or its distributors and shall be available for inspection at the job site at the request of the Building Official.

This NOA **revises & renews NOA #12-0305.15** (Ingersoll-Rand) and consists of this page 1 and evidence pages E-1, E-2 and E-3, as well as approval document mentioned above.

The submitted documentation was reviewed by **Ishaq I. Chanda, P.E.**

MIAMI-DADE COUNTY APPROVED

5/5/15

NOA No. 14-0827.04
Expiration Date: May 05, 2016
Approval Date: May 14, 2015

Schlage Lock Company

NOTICE OF ACCEPTANCE: EVIDENCE SUBMITTED

A. DRAWINGS

1. Manufacturer's parts and sections drawings (Submitted under file as below).
2. Drawing No "**975W**" **Rev E**, titled "H-16 4 FG 6070 outswing Doors w/ Sidelites & Transom", sheets 1 through 17 of 17, prepared by the manufacturer, dated 02-23-03 and last revised on 04/12/15, signed and sealed by Thomas Gordon, P.E.

B. TESTS (Submitted under files **#14-0221.03/#13-0826.02 /#12-0305.07/# 08-0715.03**)

1. Test report on
   1) Air Infiltration Test, per TAS 202-94
   2) Uniform Static Air Pressure Test, Loading per TAS 202-94
   3) Large Missile Impact Test per FBC, TAS 201-94
   4) Cyclic Wind Pressure Loading per FBC, TAS 203-94
   5) Forced Entry Test, per PA 202-94

   Along with manufacturer's parts and section drawings of Single outswing steel doors w/ Stainless steel continuous Hinges & modified Hat stiffeners, marked by Certified Testing Lab, Test Reports No(s). **CTLA-3045W** dated February 16, 2015, signed and sealed by Ramesh Patel, P.E.
2. Test report on 1) Air Infiltration Test, per TAS 202-94
   2) Water Resistance Test per FBC TAS 202-94(Not conducted)
   3) Uniform Static Air Pressure Test, Loading per TAS 202-94
   4) Large Missile Impact Test per FBC, TAS 201-94
   5) Cyclic Wind Pressure Loading per FBC, TAS 203-94
   6) Forced Entry Test, per FBC, TAS 202-94

   Along with manufacturer's parts and section drawings of double glazed outswing steel doors w/ sidelites & Transom, marked by Certified Testing Lab, Test Reports No(s). **CTLA-975W** dated Jan 23, 2003 and **CTLA-776W-1** dtd April 25, 2002, both signed & sealed by Ramesh Patel, P.E.
3. Reference Test report
   1) Air Infiltration Test, per TAS 202-94
   2) Uniform Static Air Pressure Test, Loading per TAS 202-94
   3) Large Missile Impact Test per FBC, TAS 201-94
   4) Cyclic Wind Pressure Loading per FBC, TAS 203-94
   5) Forced Entry Test, per PA 202-94

   Along with manufacturer's parts and section drawings of double glazed outswing steel doors, marked by Certified Testing Lab, Test Reports No(s). **CTLA-776W** dated February 20, 2002, **CTLA-975W** dated Jan 23, 2003, **CTLA-882W** dated Aug 29, 2002, **CTLA-1035W** dated May 28, 2003 and , **CTLA-1086-W** dated Nov. 17, 2003 and **CTLA-1107W-3** dated June 30, 2004, all signed and sealed by Ramesh Patel, P.E.

   Note: Test report CTLA-1035W has been revised by an addendum letter dated Feb 20, 2009, signed and sealed by Ramesh Patel, P.E.

   Along with manufacturer's parts and section drawings of glazed outswing double steel doors, marked by Certified Testing Lab, Test Reports No(s). **NCTL-210-3232-1** dated 02/24/06 and **NCTL-210-3357-1** dated Dec 28, 2006, signed and sealed by Gerard J. Ferrara, P.E.
4. Additional Reference test report No.CTLA-1107W for strap anchor qualification.

Ishaq I. Chanda

Ishaq I. Chanda, P.E.
Product Control Examiner
NOA No. 14-0827.04
Expiration Date: May 05, 2016
Approval Date: May 14, 2015

NOTICE OF ACCEPTANCE: EVIDENCE SUBMITTED

C. CALCULATIONS: (Submitted under file # **08-0715.03**)

1. Anchor verification evaluation report dated 01/26/05 and last revised on 06/09/2006 prepared, signed & sealed by Thomas Gordon., P.E.
2. Hinge Load Evaluation report dtd 01/04/04, prepared, signed & sealed by Thomas Gordon, P.E.

D. QUALITY ASSURANCE BY

1. Miami Dade Department of Regulatory and Economic Resources (RER).

E. MATERIAL CERTIFICATIONS (items 4 thru6, submitted under file # **13-0826.02 /#12-0305.07**)

1. Notice of Acceptance No. **13–0717.01** issued to **Sabic Innovative Plastics** for their **"Lexan® Polycarbonate Sheet Products"**, expiring on July 17, 2018.
2. Notice of Acceptance No. **11-0624.02** issued to E.I. DuPont DeNemours & Co., Inc. for their **"DuPont Sentry Glass ® interlayer"**, expiring on 01/14/17.
3. Test Report No. **12-11177**, Nov 29, 2012, issued by Commercial Testing Co. for "Surface Flame spread & Smoke density Characteristics of Building material" per ASTME84-12 for "Elfoam P200", issued to Elliott Co. of Indianapolis Inc.
4. Test Report No. **16206-122543 (1015P200(3))**, dated November 29, 2004 for " Surface Burning Characteristics of Bldg material" per ASTME84 and self-Ignition per ASTM1929D for "Polyisocyanurate" issued by Omega Point Laboratories, Inc. to Elliot Co., Indianapolis, IN.
5. Tensile test report # CTLA-776W (0194H), dtd 02/25/02 prepared by CTL, Architectural Division, sheet samples, tested per ASTM E8, signed & sealed by Ramesh Patel, P.E.
6. Test Report No. **3094867SAT-001**, April 13, 2006, issued by Intertek for "Surface Burning Characteristics of Building material" per ASTME84 and self-Ignition per ASTM1929D for "EPS", issued to Falcon Foam, a Div of Atlas Roofing, re-named as "ATLAS EPS'.

F. STATEMENTS: Except items #1 thru 5, balanced items submitted under file **#13-0826.02)**

1. Letter of conformance to **FBC 2010**, dated 02/15/12 & 03/17/15, prepared, signed and sealed by Gordon Thomas, P.E.
2. Statement letter dated Nov. 26, 2013 issued by Ingersoll-Rand for name change, signed by Jim Donlan, Compliance Engineer.
3. Ingersoll–Rand press release, dated 12/10/12, integrating the brands of Ingersoll–Rand and Schlage among others.
4. Department of State Certification of Reinstatement for **SCHLAGE LOCK COMPANY, LLC** as a limited liability company, active and organized under the laws of the State of Florida, dated 03/17/06 and filed with the Secretary of State
5. Certification of Formation dated 12-08-2003 of Schlage Lock Company, LLC, issued by Secretary of State of Delaware.
6. Statement letter of conformance to FBC 2007 and no financial interest, dated July 14, 2008, prepared, signed and sealed by Gordon Thomas, P.E.
7. Laboratory Compliance statement issued as part of the above test reports.

Ishaq I. Chanda

Ishaq I. Chanda, P.E.
Product Control Examiner
NOA No. 14-0827.04
Expiration Date: May 05, 2016
Approval Date: May 14, 2015

NOTICE OF ACCEPTANCE: EVIDENCE SUBMITTED

G. OTHER

1. This NOA **revises & renews NOA # 14-0221.03 (#13-0826.02** (Ingersoll-Rand)), expiring on 05/05/16.
2. **One** year conditional approval, subjected to successful verification test.
3. Request for 1-Year renewal by Schlage Company dated 03/26/15, signed by James Donlan.
4. Ref: completed test report # **ESP011331P2** per T.P. # **12-0844 R** to be submitted within 1-Yr
5. Test proposals # **14-0252**, **-0254**, **#14-1086**, **#14-0254-R1** and **#12-0797R** approved by RER.
6. Previously consolidates NOA #(s) associated with this files are **#12-0305.07/# 08-0715.03** and **# 03-0611.04.**
7. Technical brochures of butt Hinges, continuous Hinges, Schlage & VonDuprin mullion, Rim and SVR Panic devices, Supplied by Schlage Company (former Ingersoll-Rand).

Ishaq I. Chanda

Ishaq I. Chanda, P.E.
Product Control Examiner
NOA No. 14-0827.04
Expiration Date: May 05, 2016
Approval Date: May 14, 2015

DESIGN PRESSURE RATING			IMPACT RATING
	WHERE WATER INFILTRATION REQUIREMENT IS NEEDED	WHERE WATER INFILTRATION REQUIREMENT IS NOT NEEDED	LARGE AND SMALL MISSILE IMPACT
POSITIVE	NOT APPROVED	+ 60 PSF	
NEGATIVE	NOT APPROVED	- 60 PSF	

REVISIONS

LTR	DESCRIPTION		DATE	APPROVED
C	REV'D DWGS.		09/12/08	
D	REVISED	JPD	08/13/13	
E	REVISED	JPD	03/11/15	

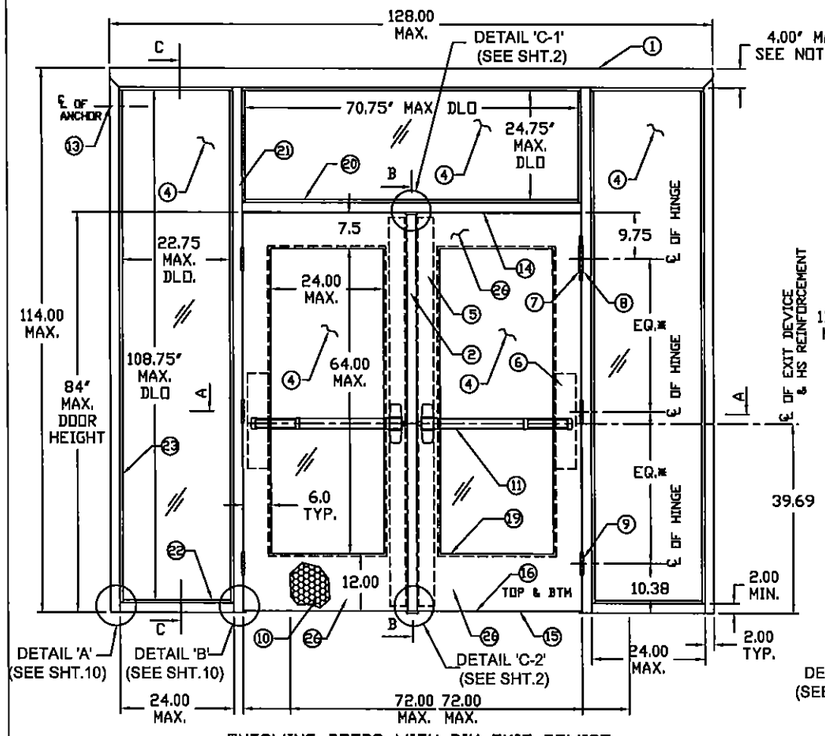

OUTSWING DOORS WITH RIM EXIT DEVICE WITH VON DUPRIN MULLION

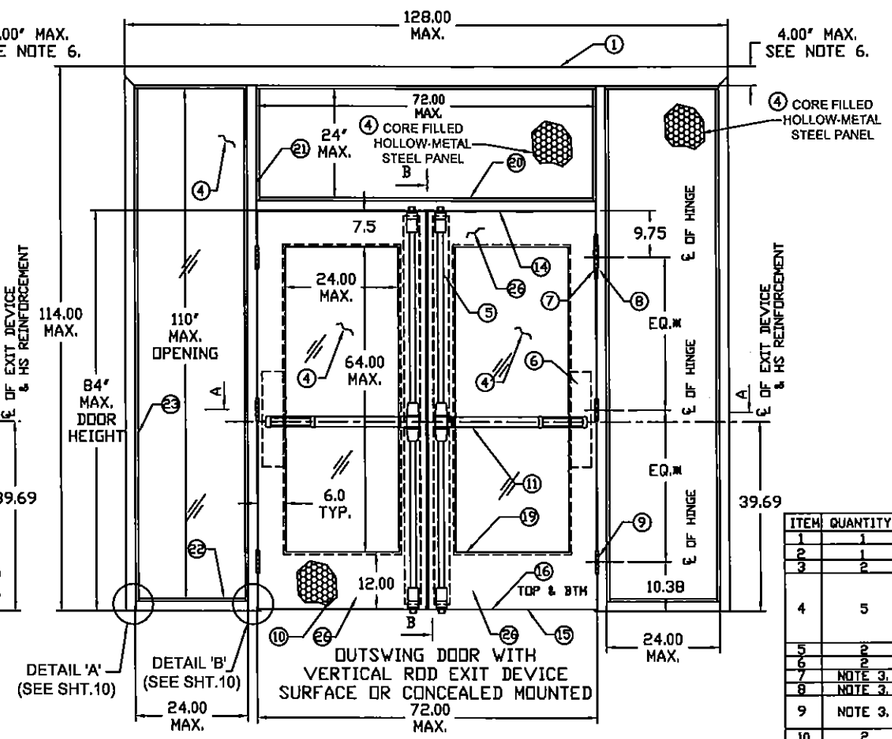

OUTSWING DOOR WITH VERTICAL ROD EXIT DEVICE SURFACE OR CONCEALED MOUNTED

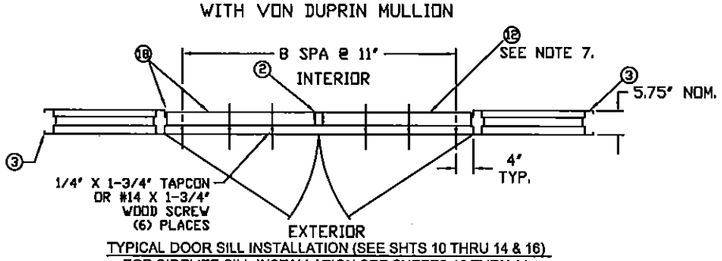

TYPICAL DOOR SILL INSTALLATION (SEE SHTS 10 THRU 14 & 16)
FOR SIDELITE SILL INSTALLATION SEE SHEETS 10 THRU 14

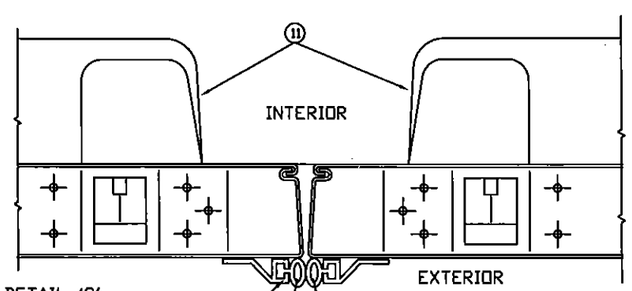

DETAIL 'C'
DOUBLE DOORS WITH VERTICAL ROD & CONCEALED VERTICAL ROD EXIT DEVICES

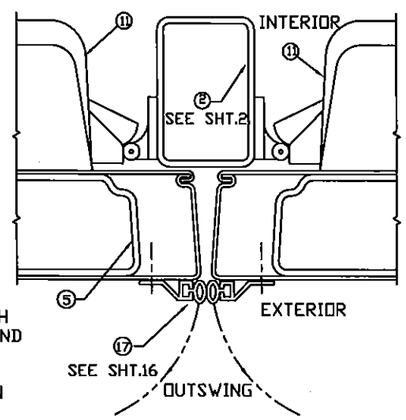

DETAIL 'C'
DOUBLE DOORS WITH RIM EXIT DEVICES AND (KEY REMOVABLE) VON DUPRIN HARDWARE MULLION

NOTES:

1. WEATHERSTRIPPING.
   - WHEN WATER INFILTRATION IS NOT NEEDED INSTALL WEATHERSTRIPPING PER SHT.16. ONE ROW OF PS074 WEATHERSTRIPPING PER JAMB AND HEAD OF DOOR OPENING.
2. ANCHOR REQUIREMENTS: SEE SHEETS 10 THRU 14 FOR APPROVED ANCHORS AND INSTALLATION.
3. HINGE REQUIREMENTS:
   FOR DOOR OPENING WITH 7'0" MAX. HEIGHT - MIN (3) HINGES
   LOCATIONS: 9.75" FROM RABBET IN HEAD TO CL OF TOP HINGE
   10.38" FROM FLOOR TO CL OF BOTTOM HINGE, EQUALLY SPACED BETWEEN.
4. SEE SHEET 5 FOR AVAILABLE STANDARD OPENING SIZES AND SPECIFICATIONS.
5. HARDWARE INSTALLATION AS PER MANUFACTURER'S INSTRUCTIONS.
6. 4" FACE HEAD IS AVAILABLE FOR PERIMETER FRAME WHEN GROUTED FULL (SEE SHEETS 9 THRU 14).
7. APPLY CAULK AS NEEDED.
8. SEE SHEET 2 FOR SECTION A-A, SEE SHEET 3 FOR SECTIONS B-B AND C-C.
9. DOOR-LITE AVAILABLE CONFIGURATIONS: FG (AS TESTED), FG2, FG3, G,V,N3, N4, LNL (SEE SHEET 5, 6 & 7).
10. INSTALL REINFORCEMENT CHANNELS (25) AROUND EACH LITE-CUTOUT.
11. PANIC HARDWARE OPTIONS: FOR 98/99 SERIES - FUNCTIONS E, RX, LX, SS, EL, CX, F
    SEE NOTES 13 AND 14 TRIMS: 990EO, 990DT, 990NL, 990TP, 992L, 994L, 996L,991K
    FOR 88-F SERIES - FUNCTIION E
    TRIMS: 880DT, 880NL, 880TP, 880K, 373L
12. PN MODEL OFFERED.
13. ELECTRICAL AND FIRE RATING OPTIONS ARE UNDER SEPARATE APPROVALS AND MUST BE REVIEWED BY THE CORRESPONDING AUTHORITY.
14. OPTIONAL "SIGNAL SWITCH" MAY BE USED AS ALLOWED BY CODE AND IT DOES NOT EFFECT THE MECHANICAL PROPERTIES OF EXIT DEVICE AND/OR INHIBIT EGRESS. TO BE REVIEWED BY THE AHJ.

ITEM	QUANTITY	DESCRIPTION	MATERIAL	SIZE
1	1	PERIMETER HEAD & SIDELITE SILL SEE SHT 9. ASTM A366	.053" MIN. STL	MAX. 128"
2	1	VON DUPRIN (KR)9954 MULLION USED W/RIM HDWE	.125" A500 STL	MAX. 84"
3	2	PERIMETER JAMB SEE SHT 9. ASTM A366	.053" MIN. STL	MAX. 114"
4	5	SIDE OR TRANSOM PANEL/LITE		
		1) STEEL PANEL 16 GA.	.053" MIN. STL	1.75" X 24" X 110" MAX.
		2) POLYCARBONATE (LEXAN) SABIC INNOVATIVE PLASTICS	.5" MIN. THICK	24" X 110" MAX.
		3) LAMINATED GLASS WITH (SENRTYGLAS INTERLAYER)	.562" MIN. THICK	
		4) LAMINATED GLASS (SUPERLITE II)	1.06" MIN. THICK	
5	2	LOCK SIDE REINFORCEMENT CHANNEL	.093" MIN. STL	1.66" X 3.5" X 81.44" MAX.
6	2	HINGE SIDE REINFORCEMENT BOX	.067" MIN. STL	1.66" X 4" X 10" MIN.
7	NOTE 3.	HINGE REINFORCEMENT DOOR	.171" MIN. STL.	1.28" X 9.19"
8	NOTE 3.	HINGE REINFORCEMENT FRAME	.171" MIN. STL.	1.23" X 9.187"
9	NOTE 3.	4.5" X 4.5" BUTT HINGES (SEE SHT.17)	X .134	(8) #12-24 HS PER HINGE
		OPTIONAL CONTINUOUS HINGE (SEE SHT.17)	.075" MIN.STL /.11 ALUM	MAX. 83"
10	2	CORE MATERIAL (SHEET 8) A&D) POYSTYRENE, B&E) POLYURETHANE, C) HONEYCOMB		
11	2	LOCKING HARDWARE - EXIT DEVICE		
		A) VON DUPRIN 98/99 RIM (PAIR WITH MULLION)		
		B) VON DUPRIN 88 RIM (PAIR WITH MULLION)		
		C) VON DUPRIN 9927 SURFACE VERT. ROD		
		D) VON DUPRIN 98/9947-F CONCEALED VERT. ROD		
		E) VON DUPRIN 33/3547A-F CONCEALED VERT. ROD		
12	1	THRESHOLD SILL W/BUMPER GASKET		
		1) NAT'L GUARD 950A 3) ZERO 566A & 65A	.100" ALUM. 6063 T5	5.50" X 0.5" X 72" MAX.
		2) PEMKO 2005AS		
13	NOTE 2.	JAMB ANCHOR	3/16" DIA. BASIC WIRE	5.19" X 9.56"
14	3	PS074 WEATHER STRIPPING	TPE	MAX. 24"
15	2	FAS-SEAL DOOR SWEEP	TPE	MAX. 35.66"
16	4	END CHANNEL, 14 GA.		.69" X 1.66" X 35.66" MAX.
17	2	SPLIT ASTRAGAL	SEE SHEET 16	
18	AS NEEDED	BUTYL RUBBER OR 100% SILICONE		
19	VARIES	GLASS HOLDING DOOR TRIM		
		1) DEZIGNER TRIM	.024" MIN. STL	22.5" X 62.5" EXPOSED GLASS MAX. SEE SHEETS 6 & 7
		2) STEEL OVERLAPPING TRIM	.035" MIN. STL	
		3) STEEL OVERLAPPING TRIM	.035" MIN. STL	
		4) HIGH SECURITY VISION FRAME SG-10 BY ANEMOSTAT	.093" MIN. STL	
20	1	TRANSOM BAR MULLION, 16 GA. MIN. ASTM A366	.053" MIN. STL	MAX. 72"
21	2	SINGLE HINGE MULLION, 16 GA. MIN. ASTM A366	.053" MIN. STL	MAX. 112"
22	2	SILL SECTION	.053" MIN. STL	MAX. 24"
23	12	FRAME GLAZING BEAD (STOP)	.035" MIN. STL	.375 X .625" X 110" MAX.
24	2	TOP CAP GALV. A60 ASTM A924	.020" MIN. STL	0.5" X 1.719" X 35.66" MAX.
25	NOTE 10.	CUTOUT REINFORCEMENT CHANNEL (18 GA)	.047" MIN. STL	0.5" X 1.5" X 64.063" MAX.
26	2	DOOR SLAB (16 OR 14 GA) ASTM A366	SEE SHEET 5	36" X 84" MAX.

PRODUCT REVISED
as complying with the Florida Building Code
Acceptance No. 14-0827.04
Expiration Date MAY 05, 2016
By Ishwar T. Chanda
Miami Dade Product Control

GORDON D. THOMAS LICENSE No. 46718 STATE OF FLORIDA PROFESSIONAL ENGINEER

4/22/15

Gordon Thomas, P.E. Date
3759 Blossom Court
Mason, OH 45040
Florida # 46718

BEND RADIUS

THIRD ANGLE PROJECTION

DRAWN	YMF	DATE 02.24.03
CHECKED		
APPROVED		
ENG. APPVL		

SCHLAGE LOCK COMPANY, LLC
6810 HILLSDALE COURT
INDIANAPOLIS, IN 46250

MANUFACTURING LOCATION:
STEELCRAFT
9017 BLUE ASH ROAD
CINCINNATI, OH 45242

TITLE STEELCRAFT H SERIES SINGLE AND DOUBLE DOORS WITH TRANSOM AND SIDELITE FRAME
H16 4 FG SINGLE & 6070 DOUBLE DOORS (OUTSWING)
FULL GLASS CONFIGURATION
WITH SIDE AND TRANSOM PANEL/LITES
AND EXIT HARDWARE

SIZE	FLAT	DWG NO. 975W	SHEET 1 OF 17	REV E
SCALE: NTS	AUTOCAD			

REVISIONS			
LTR	DESCRIPTION	DATE	APPROVED
C	REV'D DWG.	08/26/08	
D	REVISED	08/30/13	
E	REVISED JPD	03/11/15	

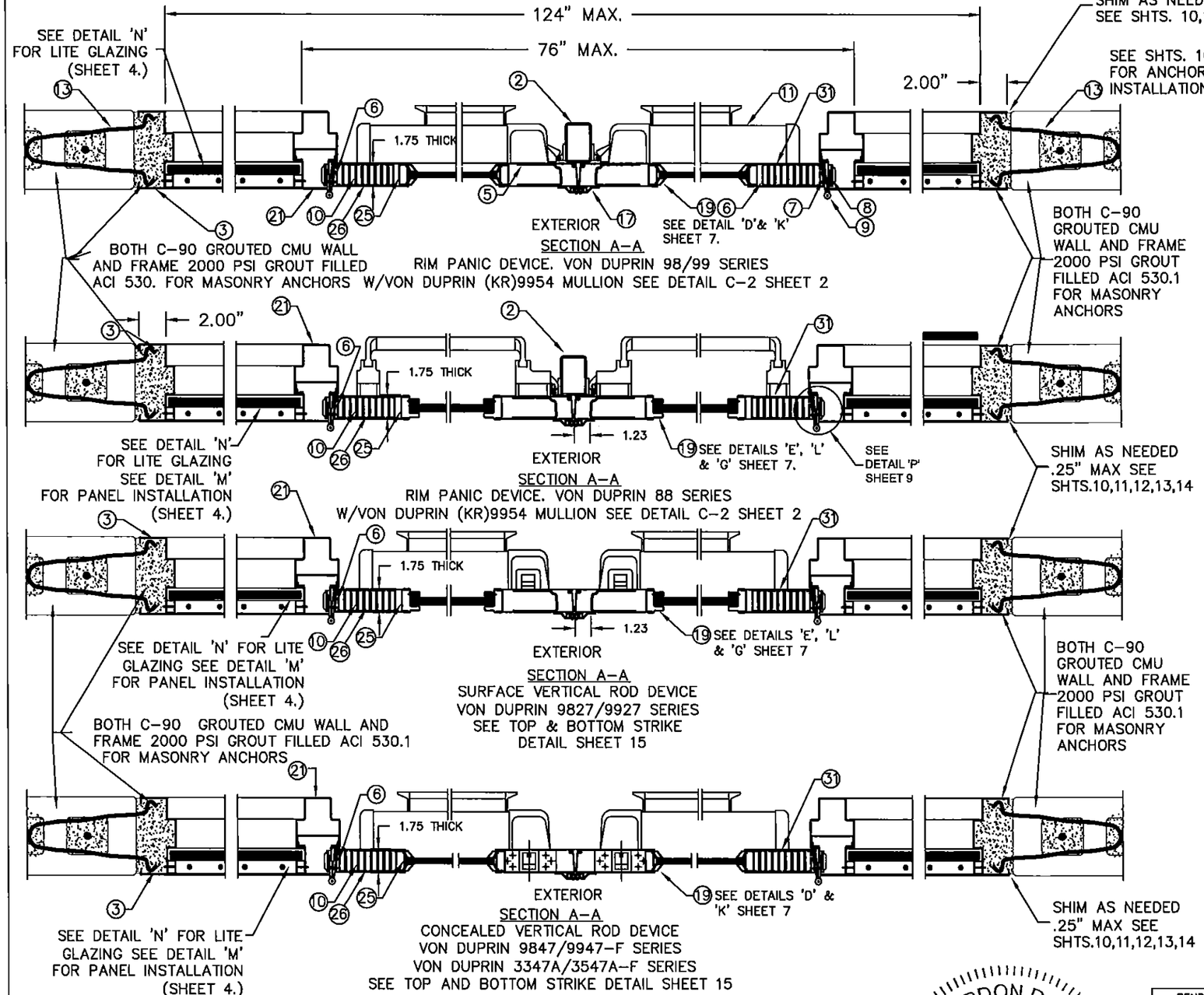

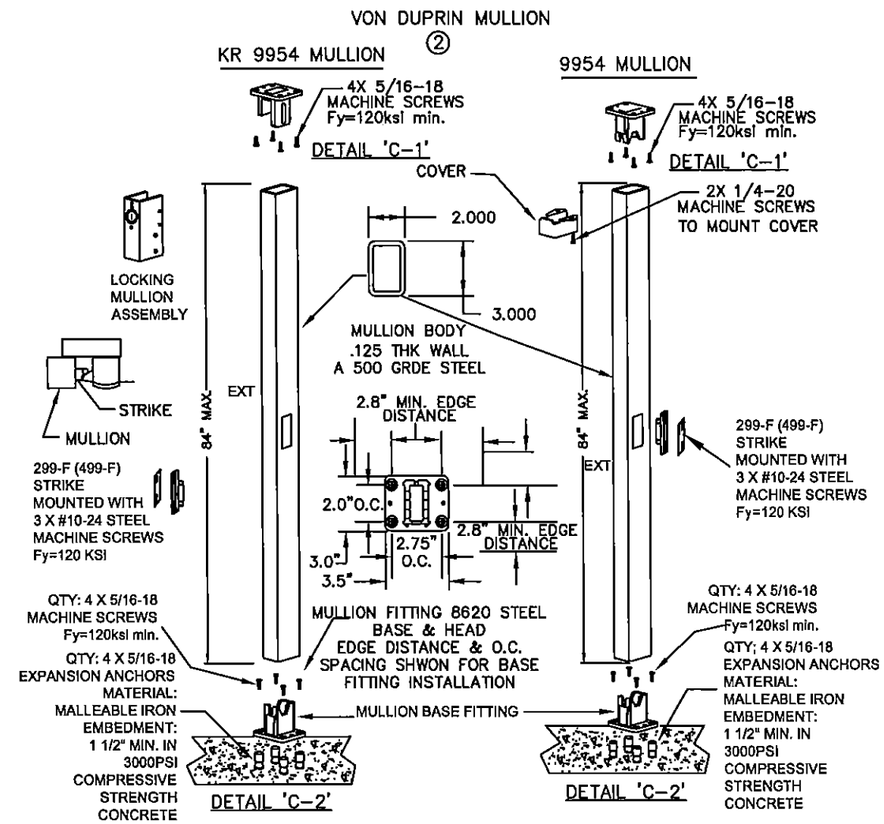

NOTES:
1. SEE SHTS. 1 & 9 FOR ELEVATION, MATERIAL AND SIZE
2. SEE SHT.1 NOTE 2. FOR ANCHOR REQUIREMENTS
3. SEE SHTS. 10 THRU 14 FOR WALL CONSTRUCTION AND ANCHORING SYSTEM
4. SEE SHTS. 5,7,9&16 FOR AVAILABLE OPENING SIZES, JAMB DEPTHS AND SPECIFICATIONS
5. HARDWARE INSTALLATION IS PER MANUFACTURER'S INSTRUCTIONS

PRODUCT REVISED as complying with the Florida Building Code
Acceptance No 14-0827.04
Expiration Date 5/5/16
By Ishan I. Chand
Miami Dade Product Control

GORDON D. THOMAS LICENSE No. 46718 STATE OF FLORIDA PROFESSIONAL ENGINEER
Gordon Thomas Date
3759 Blossom Court
Mason, OH 45040
Florida #46718

BEND RADIUS
THIRD ANGLE PROJECTION

DRAWN YMF	DATE 02.24.03
CHECKED	
APPROVED	
ENG. APPVL	

SCHLAGE LOCK COMPANY, LLC
6810 HILLSDALE COURT
INDIANAPOLIS, IN 46250

MANUFACTURING LOCATION:
STEELCRAFT
9017 BLUE ASH ROAD
CINCINNATI, OH 45242

TITLE STEELCRAFT H SERIES SINGLE AND DOUBLE DOORS WITH TRANSOM AND SIDELITE FRAME
CROSS SECTION OF DOOR AND FRAME
EXIT HARDWARE
H-SERIES FG SINGLE AND 6070 DOUBLE DOORS
FULL GLASS CONFIGURATION W/ SIDE AND TRANSOM LITES/PANEL

SIZE	FLAT	DWG NO. 975W	SHEET 2 OF 17	REV E
SCALE: NTS	AUTOCAD			

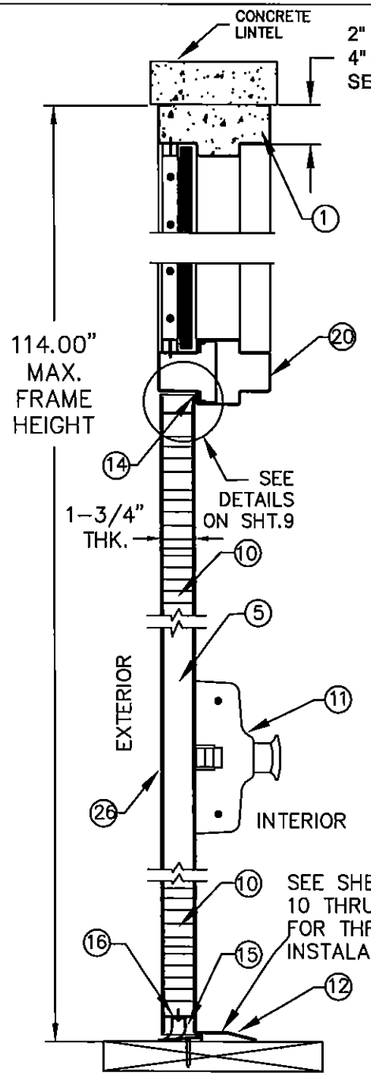

SECTION B-B
RIM PANIC DEVICE
VON DUPRIN 98/99 SERIES
W/VON DUPRIN (KR)9954
MULLION

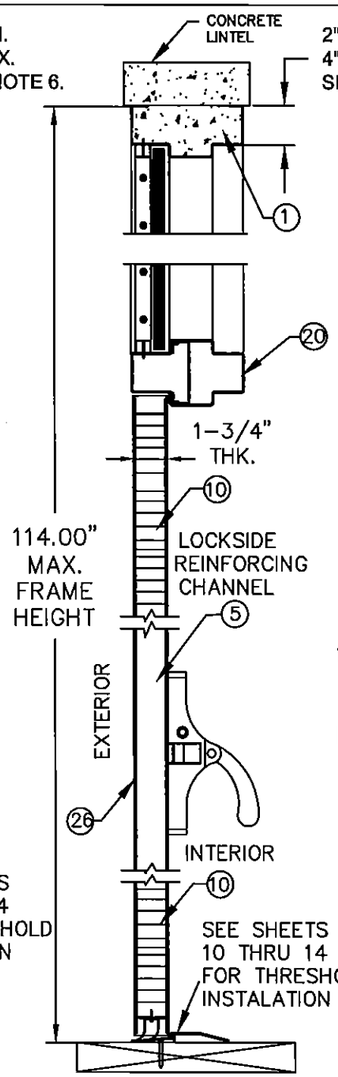

SECTION B-B
RIM PANIC DEVICE
VON DUPRIN 88 SERIES
W/VON DUPRIN (KR)9954
MULLION

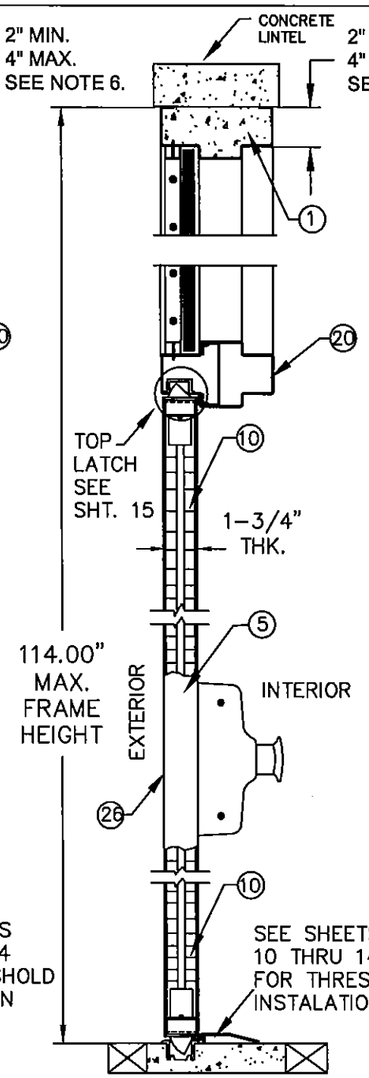

SECTION B-B
CONCEALED VERTICAL
ROD PANIC DEVICE
VON DUPRIN 9947-F/9847-F
VON DUPRIN 3347A-F/3547A-F

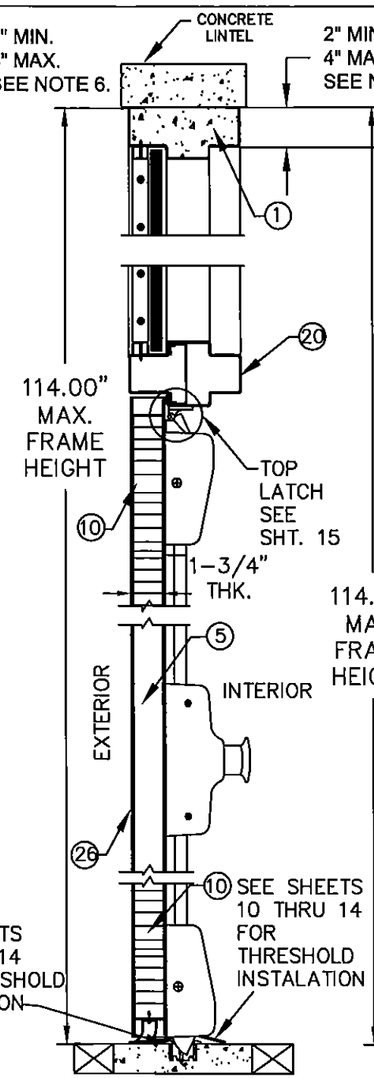

SECTION B-B
SURFACE VERTICAL ROD
PANIC DEVICE
VON DUPRIN 9827/9927

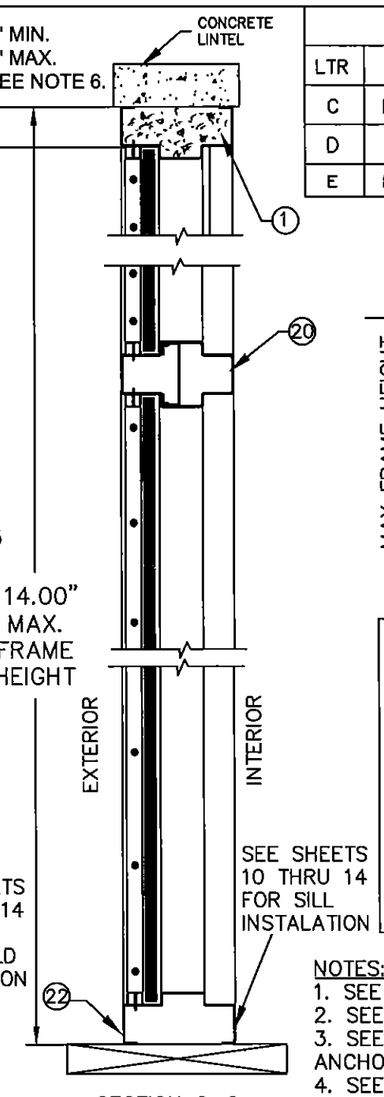

SECTION C-C
VERTICAL SIDE JAMB
SECTION

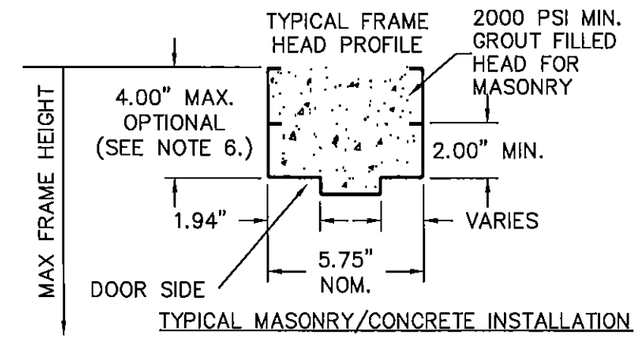

TYPICAL MASONRY/CONCRETE INSTALLATION

REVISIONS

LTR	DESCRIPTION	DATE	APPROVED
C	REVISION DWGS.	08/26/08	
D	REVISED	08/30/13	
E	REVISED JPD	03/11/15	

PRODUCT REVIEWED
as complying with the Florida
Building Code
Acceptance No. 14-0827.04
Expiration Date 5/15/16
By Miami Dade Product Control

GORDON D. THOMAS
LICENSE No. 46718
STATE OF FLORIDA
PROFESSIONAL ENGINEER
4/13/15
Gordon Thomas Date
3759 Blossom Court
Mason, OH 45040
Florida #46718

NOTES:
1. SEE SHTS.1 AND 9 FOR ELEVATION, MATERIAL AND SIZE
2. SEE SHT.1 NOTE 2. FOR ANCHOR REQUIREMENTS
3. SEE SHTS. 10 THRU 14 FOR WALL CONSTRUCTION AND ANCHORING SYSTEMS
4. SEE SHTS. 5, 7, 9 & 16 FOR AVAILABLE OPENING SIZES, JAMB DEPTHS AND SPECIFICATIONS
5. HARDWARE INSTALLATION IS PER MANUFACTURER'S INSTRUCTIONS.
6. HEAD SECTION CAN HAVE 2" OR 4" FACE HEAD WHEN GROUTED FULL WITH 2000 PSI GROUT, WITHIN MAX FRAME HEIGHT
7. WALL CONSTRUCTION STRUCTURAL MEMBERS MUST COMPLY WITH APPROVED DESIGN PRESSURE RATING.

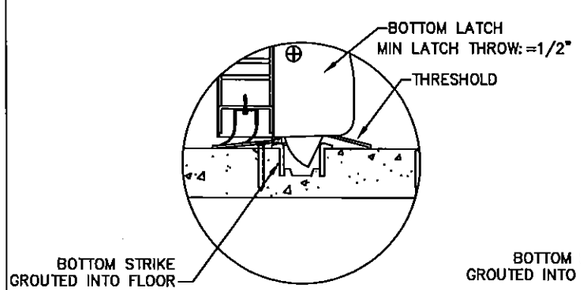

FLOOR LATCHING DETAIL
SURFACE VERTICAL ROD
EXIT DEVICE

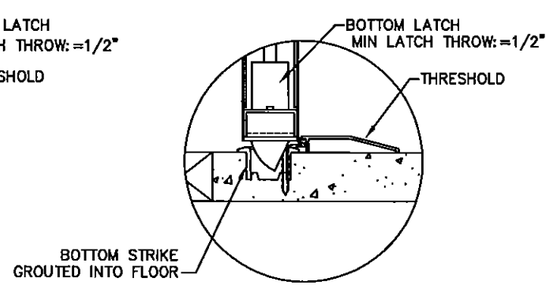

FLOOR LATCHING DETAIL
CONCEALED VERTICAL ROD
EXIT DEVICE

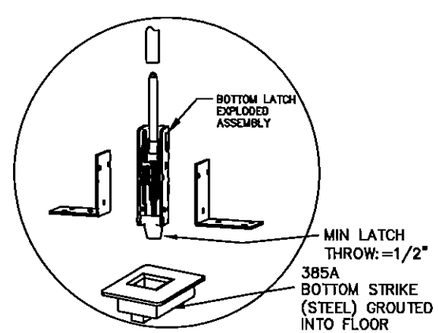

BEND RADIUS		SCHLAGE LOCK COMPANY, LLC 6810 HILLSDALE COURT INDIANAPOLIS, IN 46250	MANUFACTURING LOCATION: STEELCRAFT 9017 BLUE ASH ROAD CINCINNATI, OH 45242
THIRD ANGLE PROJECTION		TITLE	STEELCRAFT H SERIES SINGLE AND DOUBLE DOORS WITH TRANSOM AND SIDELITE FRAME CROSS SECTION OF DOOR AND FRAME WITH EXIT HARDWARE H-SERIES FG SINGLE AND 6070 DOUBLE DOORS FULLY GLAZED CONFIGURATION W/SIDE AND TRANSOM LITES/PANEL
DRAWN YMF	DATE 02.25.03		
CHECKED			
APPROVED		SIZE FLAT	DWG NO. 975W SHEET 3 OF 17 REV E
ENG. APPVL		SCALE: NTS	AUTOCAD

FRAME GLAZING DETAIL 'N'
SIDE LITE / TRANSOM LITE

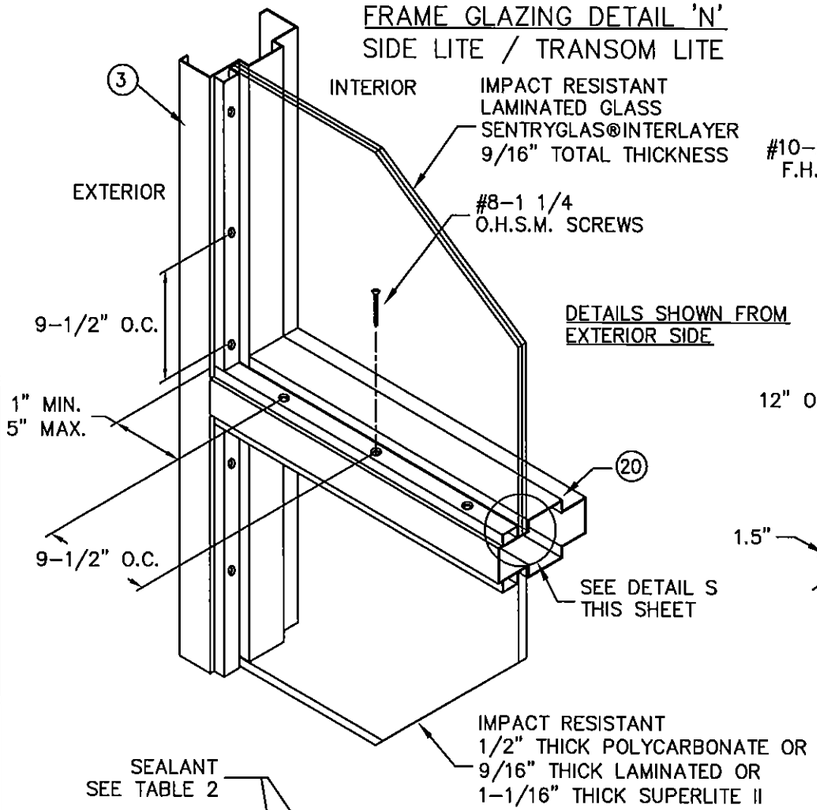

FRAME GLAZING DETAIL 'M'
SIDE / TRANSOM STEEL PANEL

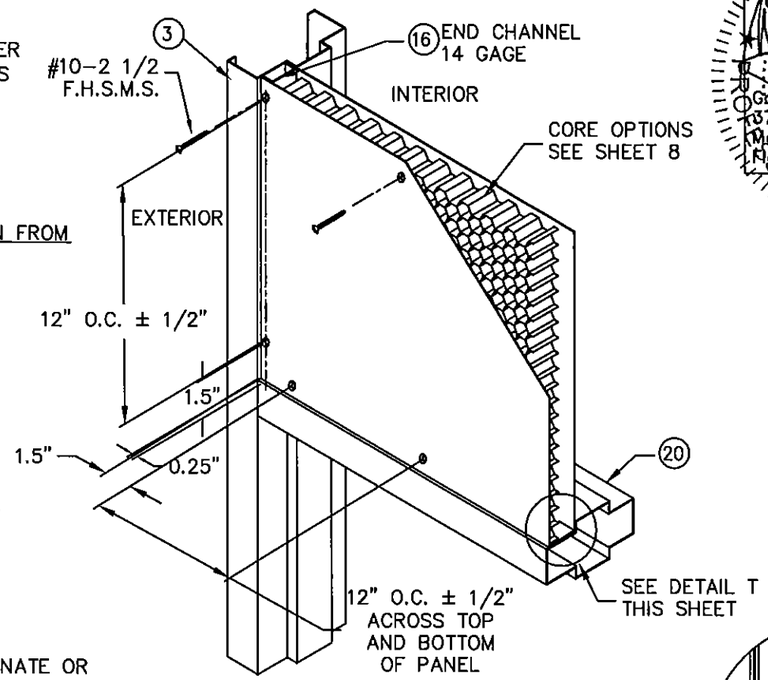

SIDELITE/TRANSOM PANEL CONSTRUCTION:
CORE MATERIAL
- PHENOLIC RESIN IMPREGNATED HONEYCOMB W/1" CELL SIZE
- POLYSTYRENE CORE
- POLYURETHANE CORE

SKIN MATERIAL (SIDELITE/TRANSOM)
- 16 GA (.053" MIN. THK)

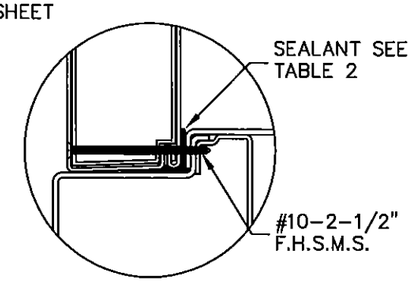

INSTALLATION DETAIL 'T'
SIDELITE/TRANSOM PANEL

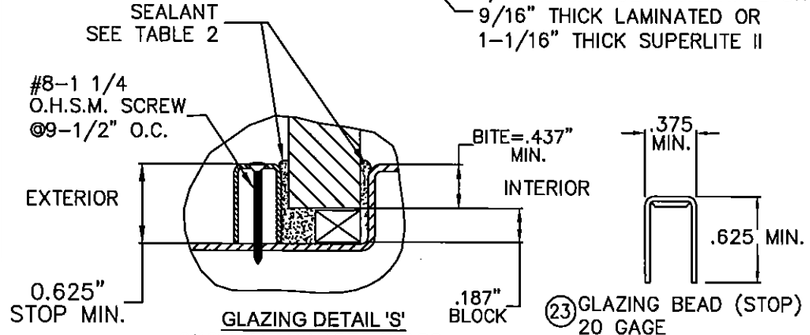

GLAZING DETAIL 'S'
9/16" HS LAMINATED GLASS,
1/2" POLYCARBONATE AND
1-1/16" SUPERLITE II-XL BY SAFTI

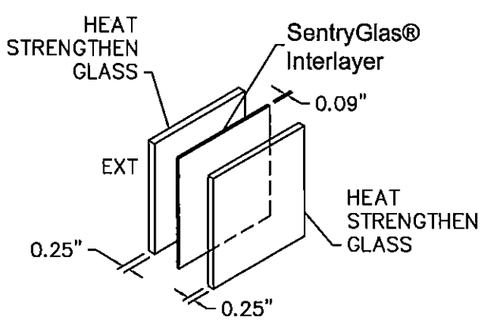

GLASS CONSTRUCTION DETAIL
9/16"HS LAMINATED GLASS WITH
SENTRYGLAS® INTERLAYER

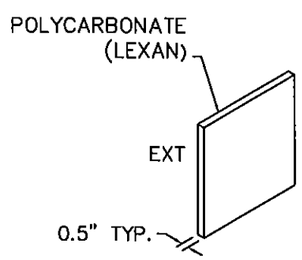

CONSTRUCTION DETAIL
POLYCARBONATE
(LEXAN BY SABIC
INNOVATIVE PLASTICS)

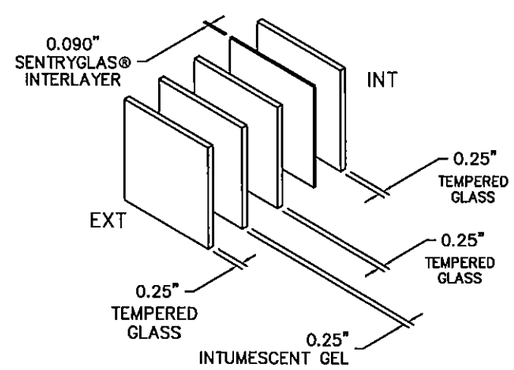

INTUMESCENT GLASS
CONSTRUCTION DETAIL 'H'
1-1/16" SUPERLITE II-XL™ BY SAFTI
WITH SENTRYGLAS® INTERLAYER

GORDON D. THOMAS
LICENSE
No. 16718
STATE OF
FLORIDA
PROFESSIONAL ENGINEER
Gordon Thomas Date 4/12/15
3759 Blossom Court
Mason, OH 45040
Florida #46718

REVISIONS

LTR	DESCRIPTION	DATE	APPROVED
A	APPROVAL DWGS.	02.25.03	
B	IN T/B, GLAZED WAS GLASS	06.06.03	
C	REV'D DWG	08/27/08	
D	REV'D DWG	08/30/13	
E	REV'D DWG	03/11/15	

PRODUCT REVIEWED
as complying with the Florida
Building Code
Acceptance No. 14-0827.04
Expiration Date 5/6/16
By Miami Dade Product Control

TABLE 2: SIDELITE & TRANSOM GLAZING OPTIONS

GLAZING TYPES AND METHODS	
TRANSOM & SIDELITE GLAZING OPTIONS	GLAZING SEALANT
1/2" TYP. POLYCARBONATE	SIKAFLEX 222UV,295UV,552 OR DOW CORNING 995/983
9/16" TYP. HS LAMINATED GLASS	SIKAFLEX 222UV,295UV,552 OR DOW CORNING 995/983
1-1/16" TYP.THICK SUPERLITE II-XL™	SIKAFLEX 222UV,295UV,552 OR DOW CORNING 995/983
1-3/4" THICK STEEL PANEL	SIKAFLEX 222UV,295UV,552 OR DOW CORNING 995/983

NOTES:
1. SEE SHTS. 1, 5, 9 AND 16 FOR ELEVATION, MATERIAL AND SIZE
2. SEE SHT.1 NOTE 2. FOR ANCHOR REQUIREMENTS
3. SEE SHTS. 10 THRU 14 FOR WALL CONSTRUCTION AND ANCHORING SYSTEM
4. SEE SHTS. 5, 6, 7, 9 & 16 FOR AVAILABLE OPENING SIZES, JAMB DEPTHS AND SPECIFICATIONS
5. HARDWARE INSTALLATION IS PER MANUFACTURER'S INSTRUCTIONS

BEND RADIUS
THIRD ANGLE PROJECTION

SCHLAGE LOCK COMPANY, LLC
6810 HILLSDALE COURT
INDIANAPOLIS, IN 46250

MANUFACTURING LOCATION:
STEELCRAFT
9017 BLUE ASH ROAD
CINCINNATI, OH 45242

TITLE STEELCRAFT H SERIES SINGLE AND DOUBLE DOORS WITH TRANSON AND SIDELITE FRAME
GLAZING AND PANEL DETAILS
H-SERIES FG SINGLE AND 6070 DOUBLE OPENING
FULL GLAZED CONFIGURATION W/SIDE AND TRANSOM LITES/PANEL

DRAWN	DATE
YMF	02.25.03
CHECKED	
APPROVED	
ENG. APPVL	

SIZE: FLAT | DWG NO. 975W | SHEET 4 OF 17 | REV E
SCALE: NTS | AUTOCAD

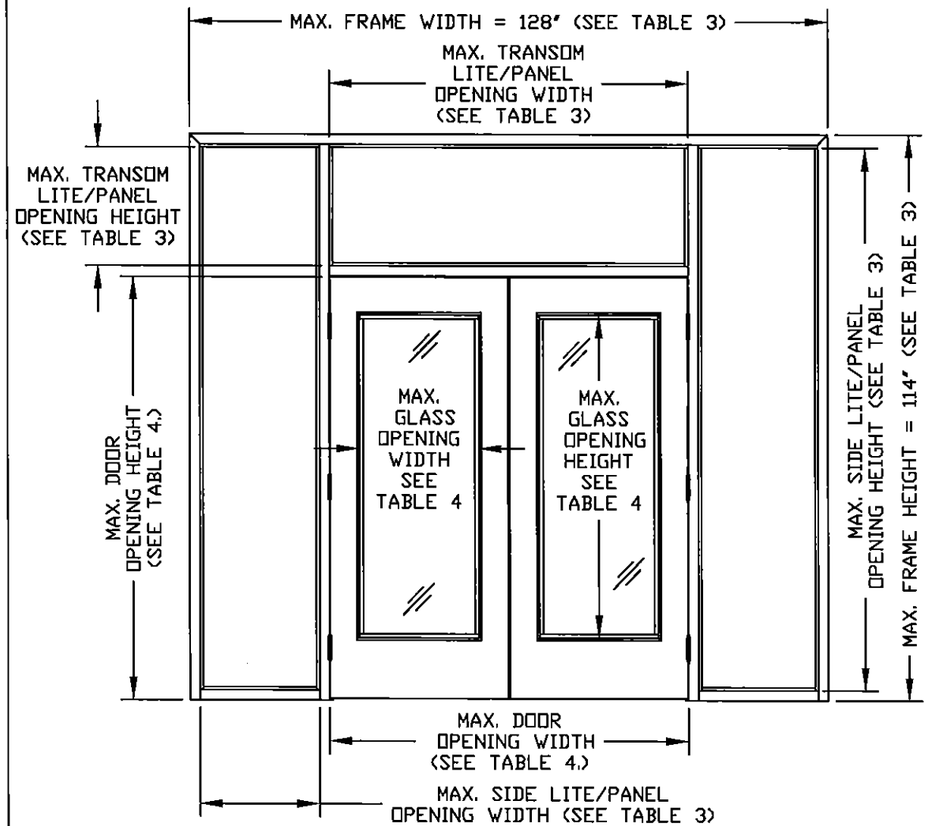

AVAILABLE DOOR-LITE CONFIGURATIONS (SEE SHEET 6)

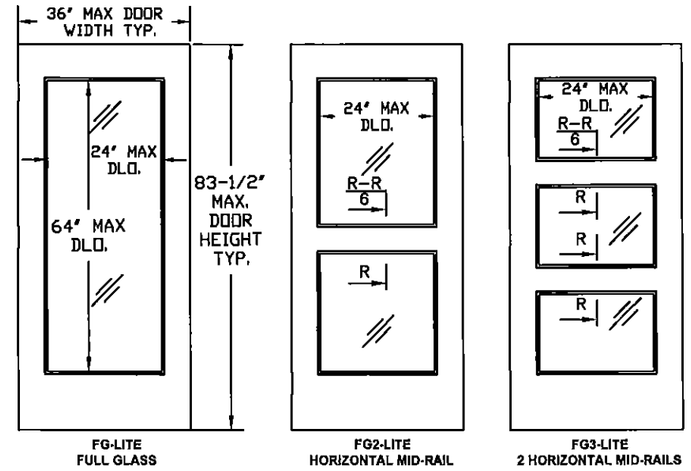

TABLE 5. STEEL DOOR & FRAME MECHANICAL PROPERTIES

MATERIAL	ASTM REF.	YIELD KSI	TENSILE KSI
CRS	A366	MIN. 41.5	MIN. 52.9
HRS	A1011		
GALV: A60	A924		
SS: 304,316	A240	MIN. 41.5	MIN. 73.2

REVISIONS

LTR	DESCRIPTION	DATE	APPROVED
B	APPROVAL DWG YMF	01/06/05	
C	REV'D DWG	08/27/08	
D	REV'D DWG	08/30/13	
E	REV'D DWG	03/11/15	

PRODUCT REVISED
as complying with the Florida Building Code
Acceptance No. 14-0827.04
Expiration Date 5/15/16
By [signature]
Miami Dade Product Control

GORDON D. THOMAS
LICENSE No. 46718
PROFESSIONAL ENGINEER
STATE OF OHIO
4/12/15
Gordon Thomas Date
3759 Blossom Court
Mason, OH 45040
Florida No. 46718

TABLE 3. AVAILABLE STEELCRAFT FRAME CONFIGURATIONS (SEE NOTE 1.)

FRAME SERIES	JAMB DEPTH	FRAME MATERIAL		WALL OPENING SIZE, MAX.		TRAMSOM LITE/PANEL OPENING SIZE, MAX.		SIDE LITE/PANEL OPENING SIZE, MAX.		GLAZING MATERIAL	
		DESCR.	GA./MIN. THK	WIDTH	HEIGHT	WIDTH	HEIGHT	WIDTH	HEIGHT	DESCR.	THICKNESS
F	5.75" NOM.	CRS/HRS GALV	16/.053" 14/.067" 12/.099"	10'8" (128")	9'6" (114")	6'0" (72")	2'2" (26")	2'0" (24")	9'2" (110")	POLYCARBONATE LEXAN BY SABIC INNOVATIVE PLASTICS	.5" TYP.
		STAINLESS STEEL	16/.053"							LAMINATED GLASS WITH 0.09" SENTRYGLAS® INTERLAYER	.56" TYP.
MU	5.75" NOM.	CRS/HRS GALV	16/.053" 14/.067"							LAMINATED GLASS SUPERLITEII BY SAFTI	1.06" TYP.
										SIDE/TRANSOM PANEL WITH HONEYCOMB CORE POLYSTYRENE CORE POLYURETHANE CORE	1.75"

TABLE 4. AVAILABLE STEELCRAFT DOOR CONFIGURATIONS (SEE NOTE 2.4)

CORE MATERIAL PER SHT.8	DOOR OPENING SIZE, MAX.		SKIN MATERIAL		GLASS OPENING SIZE, MAX.		GLAZING MATERIAL	
	WIDTH	HEIGHT	DESCR.	GA./MIN. THK	WIDTH	HEIGHT	DESCR.	THICKNESS
HONEYCOMB POLYSTYRENE POLYURETHANE	6'0" (72")	7'0" (84")	CRS GALV Fy min=41.5KSi	16/.053" 14/.067"	2'0" (24")	5'4" (64")	POLYCARBONATE LEXAN BY SABIC MAKROLON BY BAYER	.5" TYP.
							LAMINATED GLASS WITH 0.09" SENTRYGLAS® INTERLAYER	.56" TYP.
			STAINLESS STEEL Fy MIN=41.5KSi	16/.053"			LAMINATED GLASS SUPERLITE II BY SAFTI	1.06" TYP

NOTES:

1. FRAME CONSTRUCTION
1.1. NOMINAL JAMB DEPTH – 5 3/4", STOP HEIGHT – 5/8"
1.2. FRAMES AVAILABLE AS FLUSH (F-SERIES) AND MULT-USE(MU-SERIES) (SEE TABLE 3.)
1.3. FOR GLAZING DETAILS REFER TO SHEET 4.
1.4. SIDE/TRANSOM LITE/PANEL SIZES SHOWN (AS TESTED) ARE MAX. SIZES AVAILABLE. MULTIPLE LITES/PANELS ARE ACCEPTABLE WITH TOTAL DIMENSIONS LESS OR EQUAL TO THE SHOWN MAX. DIMENSIONS SHOWN IN TABLE 3.

2. DOOR CONSTRUCTION
2.1. NOMINAL DOOR THICKNESS – 1 3/4"
2.2. GLASS OPENING SIZE TESTED (SEE TABLE 4.) IS MAX SIZE AVAILABLE FOR 6'0" X 7'0" DOOR OPENING. ALL SMALLER SIZES ARE ACCEPTABLE, AS DETERMINED BY FBC..
2.3. MAXIMUM GLASS OPENING SIZE WILL CHANGE IN PROPORTION WITH DOOR SIZE TESTED.
2.4. AVAILABLE DOOR-LITE CONFIGURATIONS: SEE SHEET 6.
2.5. FOR GLAZING DETAILS REFER TO SHEET 7.

3. SEE TABLE 5 FOR MATERIAL SPECIFICATIONS FOR DOORS & FRAMES.

BEND RADIUS

THIRD ANGLE PROJECTION

DRAWN YMF	DATE 02.25.03
CHECKED	
APPROVED	
ENG. APPVL	

SCHLAGE LOCK COMPANY, LLC
6810 HILLSDALE COURT
INDIANAPOLIS, IN 46250

MANUFACTURING LOCATION:
STEELCRAFT
9017 BLUE ASH ROAD
CINCINNATI, OH 45242

TITLE STEELCRAFT H SERIES SINGLE AND DOUBLE DOORS WITH TRANSOM & SIDELITE FRAMES
DOOR AND FRAME CONFIGURATIONS AND MATERIAL SPECS.

SIZE	FLAT	DWG NO. 975W	SHEET 5 OF 17	REV E
SCALE: NTS	AUTOCAD			

REVISIONS			
LTR	DESCRIPTION	DATE	APPROVED
B	APPROVAL DWG YMF	01/06/05	
C	REV'D DWG	08/27/08	
D	REV'D DWG	08/30/13	
E	REV'D DWG	03/11/15	

AVAILABLE DOOR PANEL CONFIGURATIONS

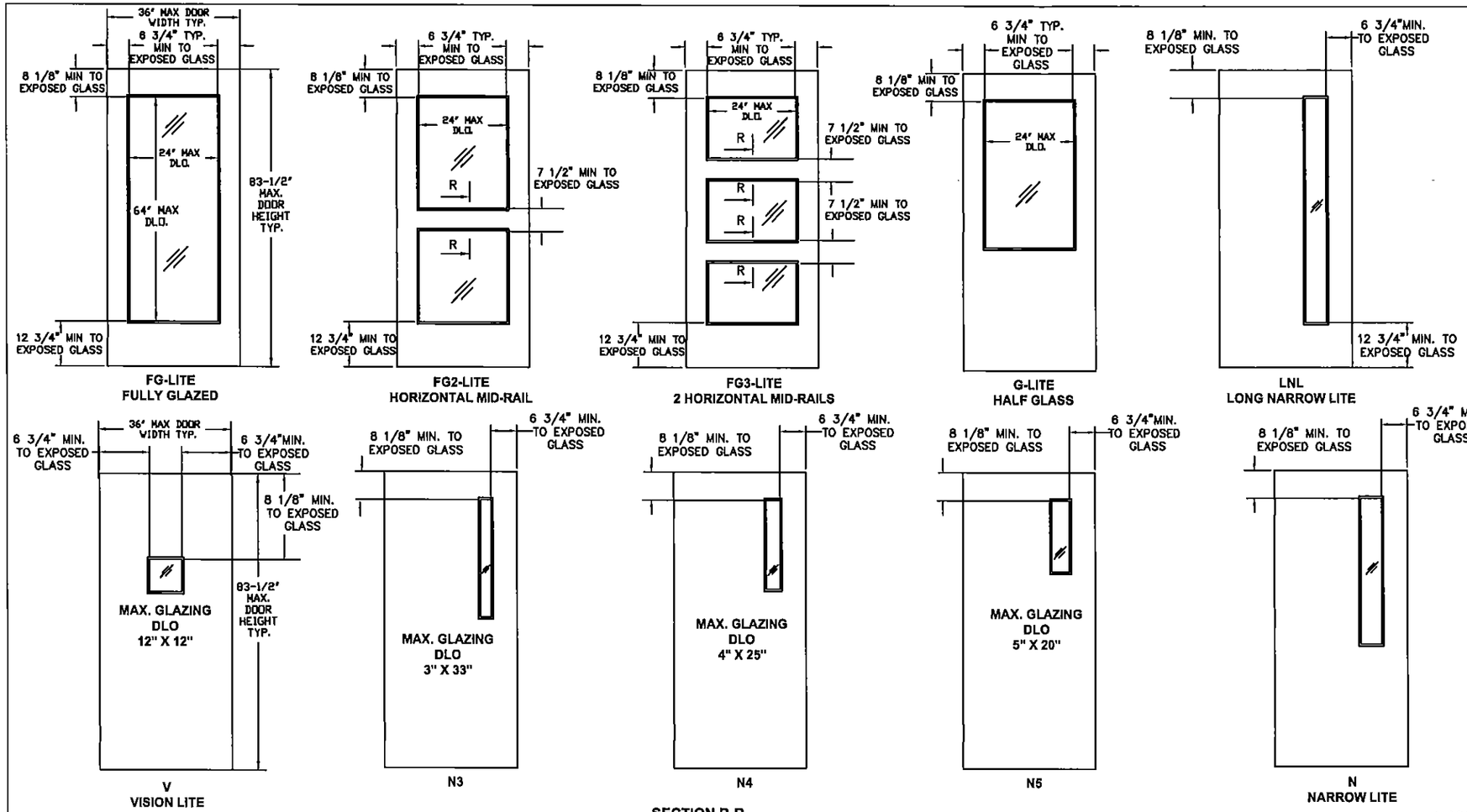

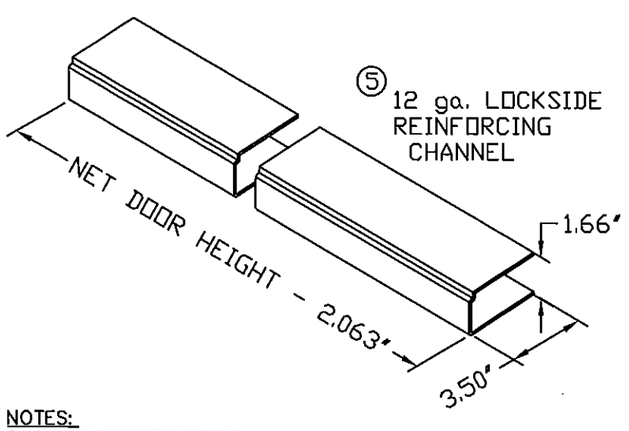

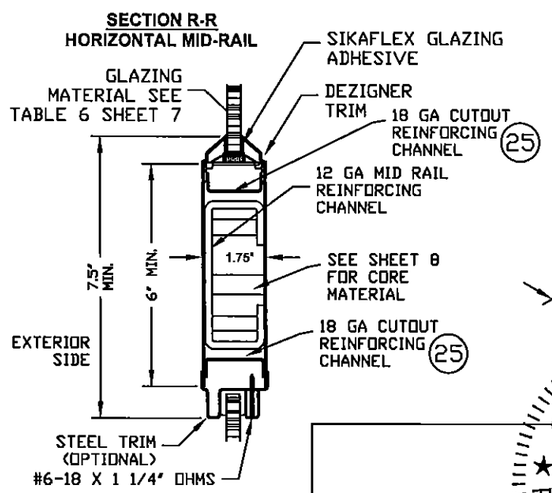

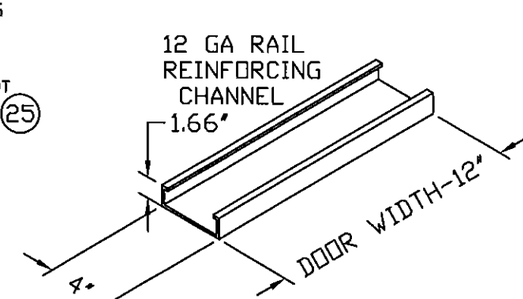

PRODUCT REVISED
as complying with the Florida
Building Code
Acceptance No 14-0827.04
Expiration Date 5/5/16
By Ishang T. Chauhan
Signed Date Product Control

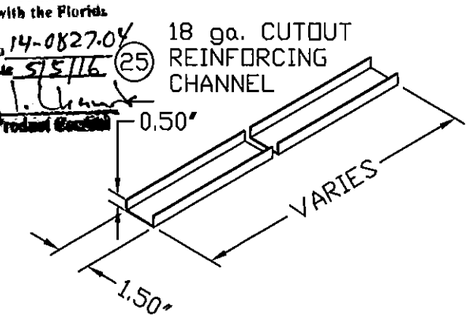

NOTES:
2. DOOR CONSTRUCTION
2.1. NOMINAL DOOR THICKNESS – 1 3/4"
2.2. GLASS OPENING SIZE TESTED (SEE TABLE 4. SHEET 5) IS MAX SIZE AVAILABLE FOR 6'0" X 7'0" DOOR OPENING. ALL SMALLER SIZES ARE ACCEPTABLE, AS PERMITTED BY FBC.
2.3. MAXIMUM GLASS OPENING SIZE WILL CHANGE IN PROPORTION WITH DOOR SIZE (SEE TABLE 4)
2.4. FOR DOOR GLAZING DETAILS REFER TO SHEET 7.
2.5. WHEN USING CONTINUOUS HINGE THE MINIMUM DISTANCE FROM DOOR EDGE TO EXPOSED GLASS IS 6 1/4" AT STILES AND 7-1/2" AT MID RAILS.

GORDON D. THOMAS
LICENSE
No. 46718
STATE OF FLORIDA
PROFESSIONAL ENGINEER
Gordon Thomas Date
3759 Blossom Court
Mason, OH 45040
Florida #46718

BEND RADIUS	
THIRD ANGLE PROJECTION	
DRAWN YMF	DATE 02.25.03
CHECKED	
APPROVED	
ENG. APPVL	

SCHLAGE LOCK COMPANY, LLC
6810 HILLSDALE COURT
INDIANAPOLIS, IN 46250

MANUFACTURING LOCATION:
STEELCRAFT
9017 BLUE ASH ROAD
CINCINNATI, OH 45242

TITLE STEELCRAFT H SERIES SINGLE & DOUBLE DOORS WITH TRANSOM & SIDELITE FRAMES

GLASS DOOR CONFIGURATIONS

SIZE	FLAT	DWG NO. 975W	SHEET 6 OF 17	REV E
SCALE: NTS	AUTOCAD			

GLAZING TYPE 1 (LEXAN)

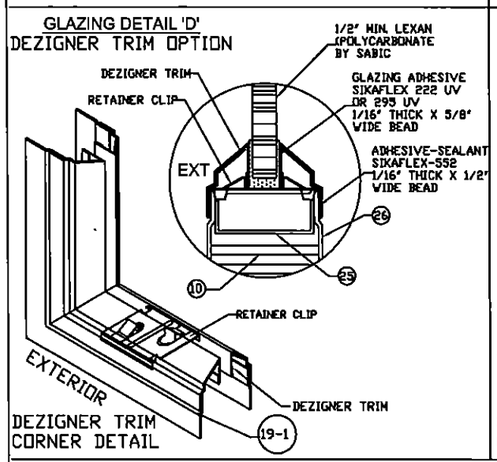

GLAZING TYPE 1 (LEXAN)

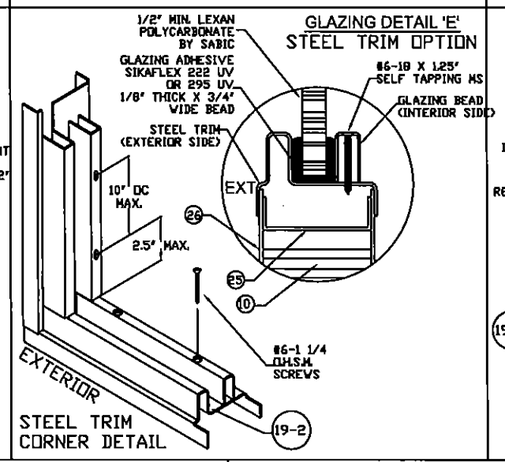

GLAZING TYPE 2 (SG)

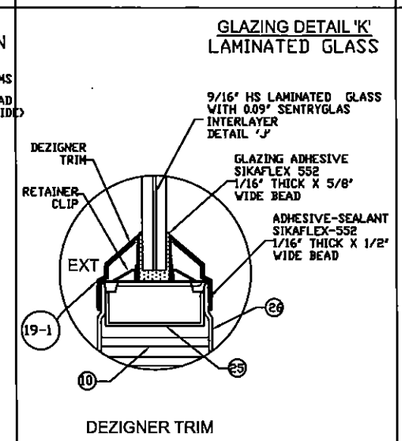

GLAZING TYPE 2 (SG)

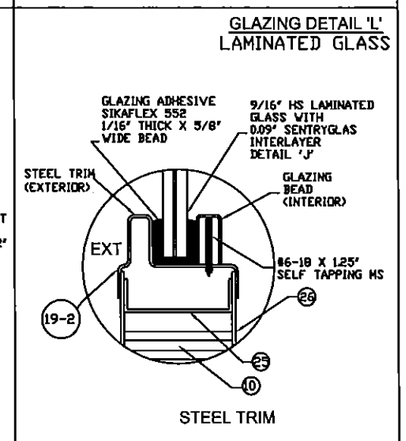

LAMINATED GLASS DETAILS

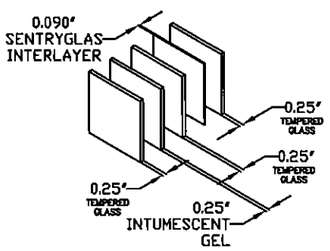

CONSTRUCTION DETAIL 'H'
INTUMESCENT GLASS
1-1/16" SUPERLITE II-XL™
BY SAFTI
WITH SENTRYGLAS INTERLAYER

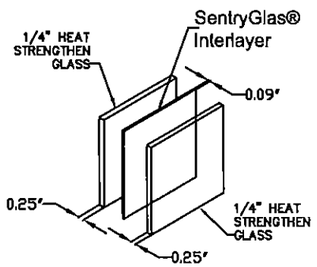

GLASS CONSTRUCTION DETAIL 'J'
9/16" HS LAMINATED GLASS WITH
SENTRYGLAS INTERLAYER

GLAZING TYPE 3 (SUPERLITE II-XL)

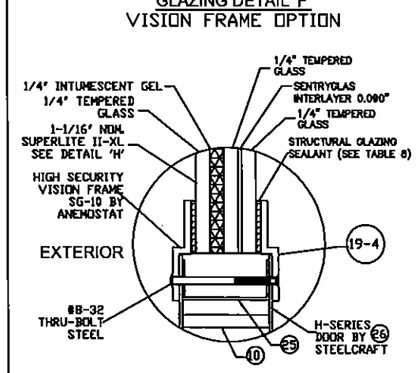

HIGH SECURITY VISION LITE KIT
SG-10 BY ANEMOSTAT
PROFILE SHOWN FOR 1-1/16" GLASS

GLAZING TYPE 3 (SUPERLITE II-XL)

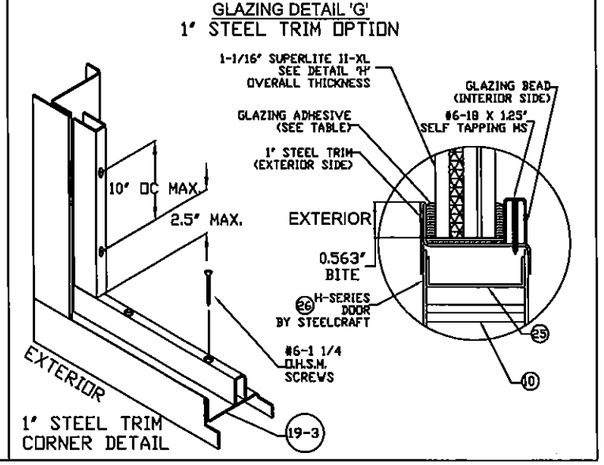

1" STEEL TRIM
CORNER DETAIL

GLASS TRIM OPTIONS

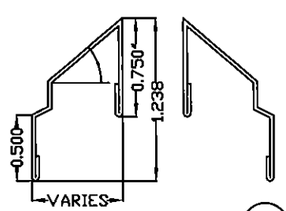

DEZIGNER TRIM PROFILE (19-1)
MATERIAL: 24 GA A40 STEEL

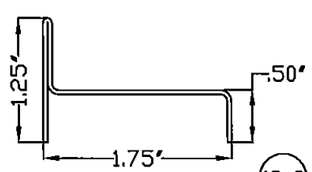

1" STEEL TRIM (19-3)
MATERIAL: 20 GAGE A40 STEEL

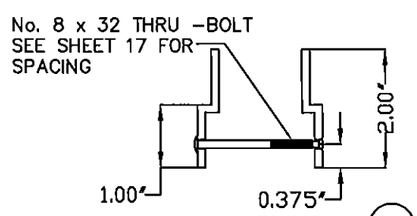

HIGH SECURITY METAL VISION LIITE KIT (19-4)
MATERIAL: 12 GAGE
ANEMOSTAT SG-10

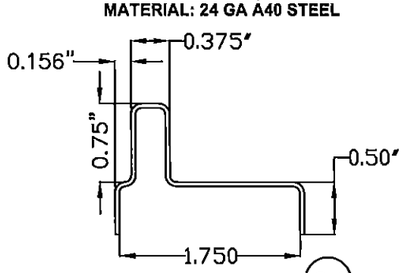

STEEL TRIM (19-2)
MATERIAL: 20GA A40 STEEL

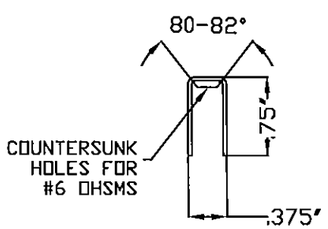

GLAZING BEAD FOR STEEL OVERLAPPING TRIMS
20 GAGE A40 STL

REVISIONS

LTR	DESCRIPTION			DATE	APPROVED
B	APPROVAL	DWG	YMF	01/06/05	
C	REVISED	DWG	YMF	08/27/08	
D	REVISED	DWG	JPD	08/30/13	
E	REVISED	DWG	JPD	03/11/15	

PRODUCT REVISED
as complying with the Florida
Building Code
Acceptance No 14-0827.04
Expiration Date 5/5/16
By Lyhung T. Chau
Miami Dade Product Control

TABLE 6.

GLAZING TYPES AND METHODS

TYPE	GLAZING MATERIAL	TRIM TYPE	SEALANT -ADHESIVE	GLAZING SEALANT
1	LEXAN BY SABIC INNOVATIVE PLASTICS 1/2" TRIM DETAILS 'D' & 'E'	DEZIGNER 1/2"	SIKAFLEX 552	SIKAFLEX 222UV OR 295UV 1/16" X 5/8" BEAD
		STEEL TRIM		
2	9/16" HS LAMINATED GLASS WITH SENTRYGLAS INTERLAYER 'J' TRIM DETAILS 'K' & 'L'	DEZIGNER 1/2"	SIKAFLEX 552	SIKAFLEX 552 OR DOW CORNING 995/983 1/16" X 5/8" BEAD
		STEEL TRIM		
		1" STEEL TRIM		
3	SUPERLITE II-XL™ BY SAFTI WITH SENTRYGLAS INTERLAYER 'H' TRIM DETAILS 'F' & 'G'	1" STEEL TRIM (DETAIL 'G')	NONE	SIKAFLEX 552 OR DOW CORNING 995/983 1/16" X 5/8" BEAD
		SECURITY VISION FRAME SG-10 BY ANEMOSTAT (DETAIL 'F')	NONE	

NOTES:

1. SEE SHT.1 FOR ELEVATIONS, SHT.5 FOR SIZES AND MATERIAL SPECIFICATIONS.
2. SEE SHT.1 NOTE 2. FOR ANCHOR REQUIREMENTS
3. SEE SHTS. 10 THRU 14 FOR WALL CONSTRUCTION AND ANCHORING SYSTEM
4. SEE SHTS. 5, 9 & 16 FOR AVAILABLE OPENING SIZES, JAMB DEPTHS AND SPECIFICATIONS
5. APPROVED HARDWARE ON SHEETS 1, 2, 3, 16 & 17 TO BE INSTALLED PER MANUFACTURER'S INSTRUCTIONS.E
6. FIRE RATINGS ARE NOT PART OF THIS APPROVAL.

GORDON D. THOMAS
LICENSE
No. 46718
STATE OF FLORIDA
PROFESSIONAL ENGINEER
Gordon Thomas
3759 Glosam Court
Mason, OH 45040
Florida #46718
Date 6/2/15

BEND RADIUS

THIRD ANGLE PROJECTION

DRAWN	YMF	DATE 02.25.03
CHECKED		
APPROVED		
ENG. APPVL		

SCHLAGE LOCK COMPANY, LLC
6810 HILLSDALE COURT
INDIANAPLOIS, IN 46250

MANUFACTURING LOCATION:
STEELCRAFT
9017 BLUE ASH ROAD
CINCINNATI, OH 45242

TITLE STEELCRAFT H SERIES SINGLE AND DOUBLE DOORS WITH TRANSOM & SIDELITE FRAME
GLASS TRIM AND GLAZING OPTIONS

SIZE	FLAT	DWG NO. 975W	SHEET 7 OF 17	REV E
SCALE: NTS	AUTOCAD			

REVISIONS			
LTR	DESCRIPTION	DATE	APPROVED
D	REV'D DWG.	08/30/13	
E	REVISED JPD	03/11/15	

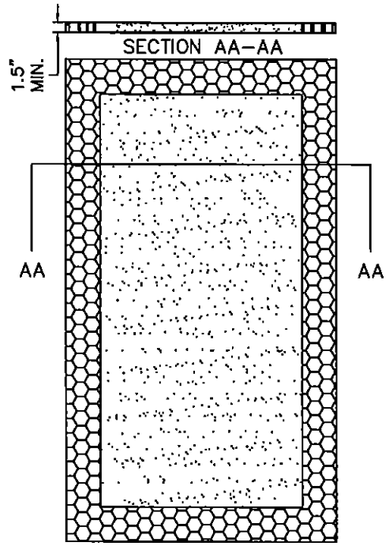

(A) EXPANDED POLYSTYRENE FOAM
BY ATLAS EPS
DENSITY: 1.0 LBS/FT^3

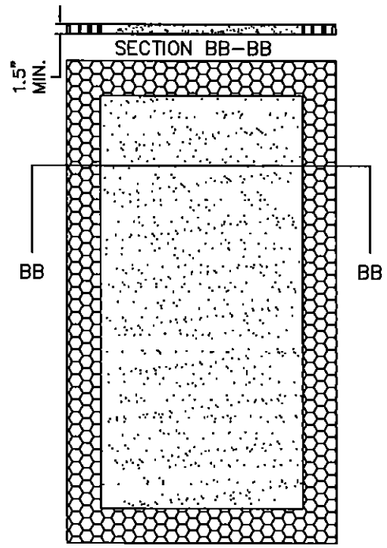

(B) POLYISOCYANURATE
(POLYURETHANE)
~~BY~~ ELFOAM. DENSITY: 2 LBS/FT^3
By Elliot Co.

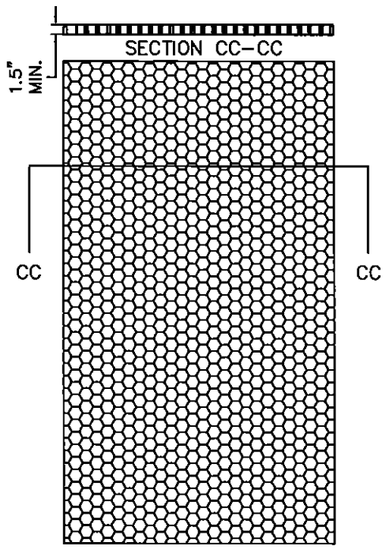

(C) HONEYCOMB
KRAFT PAPER.

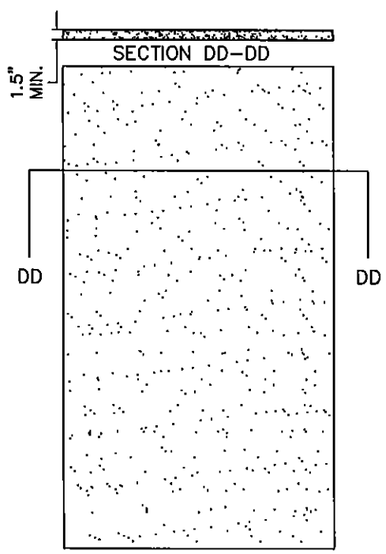

(D) EXPANDED POLYSTYRENE FOAM
BY ATLAS EPS, DENSITY: 1.0 LB/FT^3

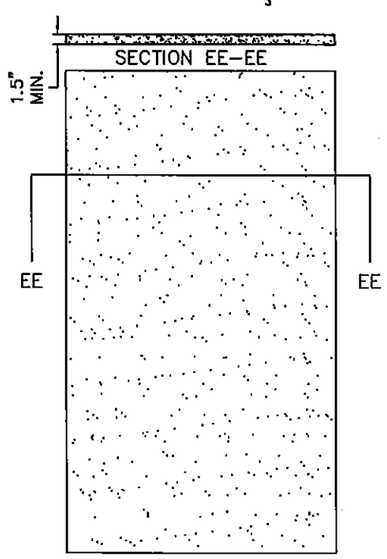

(E) POLYISOCYANURATE
(POLYURETHANE)
~~BY~~ ELFOAM. DENSITY: 2 LBS/FT^3
by Elliot Co.

PRODUCT REVISED
as complying with the Florida
Building Code
Acceptance No 14-6827.04
Expiration Date 5/5/16
By [signature]
[illegible]

GORDON D. THOMAS
LICENSE
No. 46778
STATE OF FLORIDA
PROFESSIONAL ENGINEER
Gordon Thomas Date
3759 Blossom Court
Moscow, OH 45040
Florida 46778

NOTES:

1. CORE MATERIAL SHOWN WITHOUT HARDWARE REINFORCEMENTS OR GLASS LITE CUTOUTS.

BEND RADIUS		SCHLAGE LOCK COMPANY, LLC 6810 HILLSDALE COURT INDIANAPOLIS, IN 46250	MANUFACTURING LOCATION: STEELCRAFT 9017 BLUE ASH ROAD CINCINNATI, OH 45242
THIRD ANGLE PROJECTION		TITLE STEELCRAFT H SERIES SINGLE AND DOUBLE DOORS WITH TRANSOM AND SIDELITE FRAME	
DRAWN YMF	DATE 02.24.03	CORE MATERIAL FOR DOORS AND PANELS	
CHECKED			
APPROVED		SIZE FLAT	DWG NO. 975W SHEET 8 OF 17 REV E
ENG. APPVL		SCALE: NTS AUTOCAD	

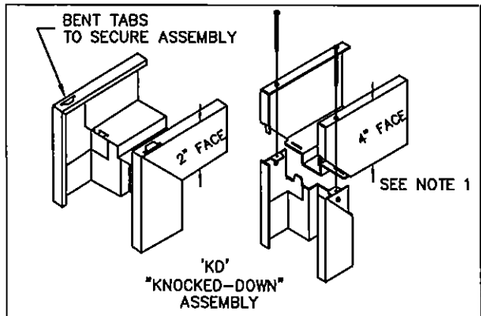

'KD'
"KNOCKED-DOWN"
ASSEMBLY

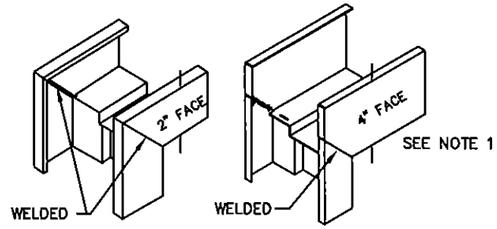

'SUA'
SET-UP AND ARC-WELDED
ASSEMBLY

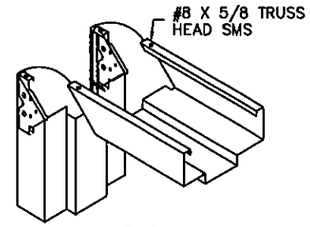

'MU'
"MULTI-USE" SERIES
KD ASSEMBLY SHOWN
WELDED CORNERS OPTIONAL

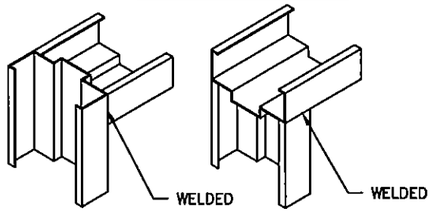

HEAD NOTCHED
AND BUTTED BETWEEN JAMBS

HEAD SITS ON TOP
OF NOTCHED JAMBS

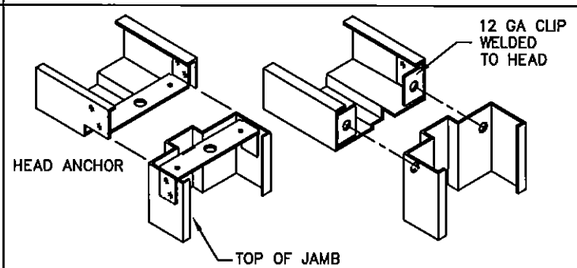

HEAD NOTCHED
AND BOLTED ON TOP OF JAMBS

HEAD NOTCHED
AND BOLTED BETWEEN JAMBS

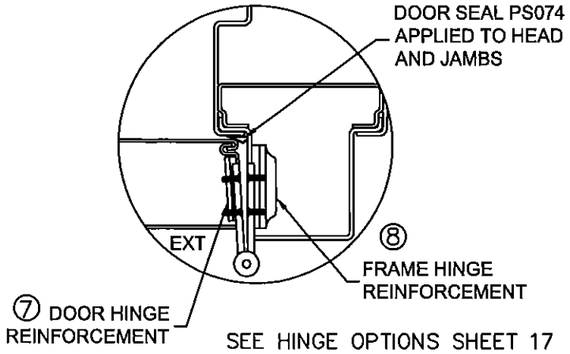

SEE HINGE OPTIONS SHEET 17

HINGE DETAIL 'P'

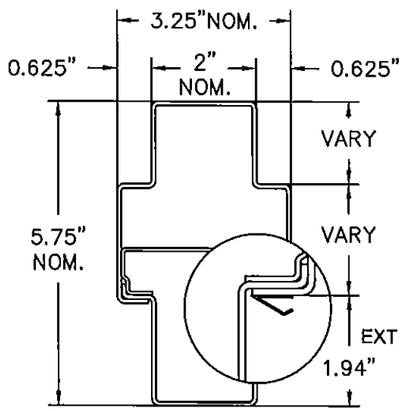

HINGE MULLION 16 GA MIN.

㉑

TRANSOM HEAD MULLION
16 GA MIN.

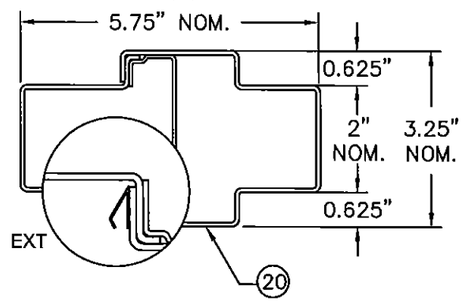

WEATHERSTRIPPING DETAIL
(ALL DIMENSIONS TYPICAL
EXCEPT WHEN SPECIFIED)

TYPICAL FRAME PROFILE
FOR JAMB AND HEAD

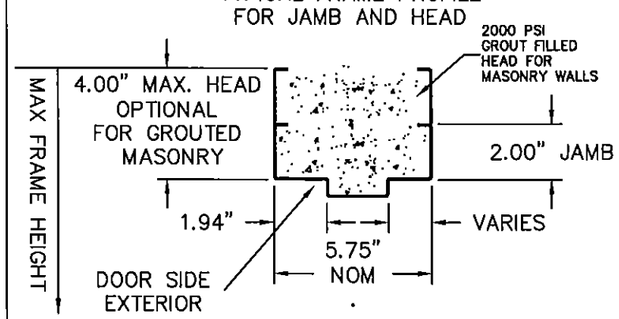

REVISIONS				
LTR	DESCRIPTION		DATE	APPROVED
A	APPROVAL DWG	YMF	02.25.03	
C	REVISED DWG	YMF	08/27/08	
D	REVISED DWG	JPD	08/30/13	
E	REVISED DWG	JPD	03/11/15	

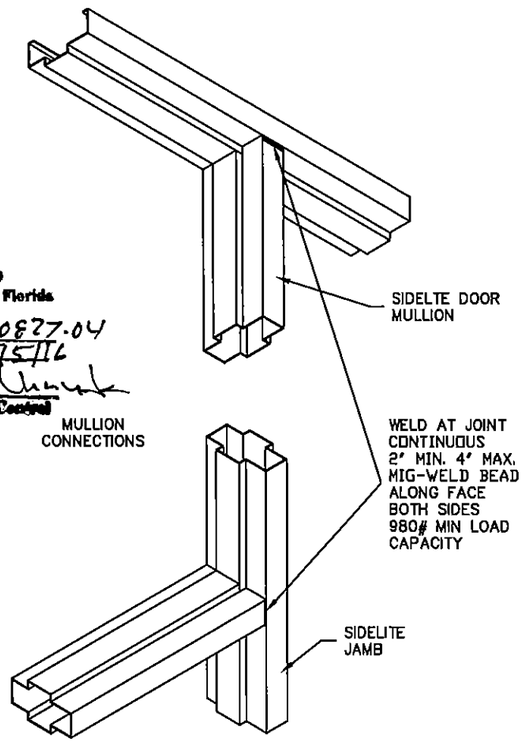

PRODUCT REVISED
as complying with the Florida
Building Code
Acceptance No. 14-0827.04
Expiration Date 5/25/16
By Shang I. Chunek
Miami Dade Product Control

NOTES:
1. GROUTED 4" FACE HEAD MAY BE USED WITHIN MAXIMUM FRAME HEIGHT LIMITATIONS.

⑦

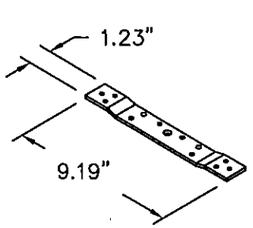

7 GA.
DOOR HINGE
REINFORCEMENT

⑧

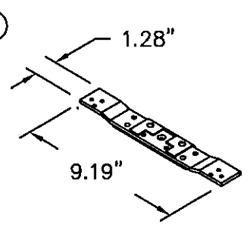

7 GA.
FRAME HINGE
REINFORCEMENT

GORDON D. THOMAS
LICENSE
No. 46718
STATE OF FLORIDA
PROFESSIONAL ENGINEER

Gordon D. Thomas Date
3759 Blossom Court
Mason, OH 45040
Florida #46718

BEND RADIUS

THIRD ANGLE PROJECTION

DRAWN YMF	DATE 02.25.03
CHECKED	
APPROVED	
ENG. APPVL	

SCHLAGE LOCK COMPANY, LLC
6810 HILLSDALE COURT
INDIANAPOLIS, IN 46250

MANUFACTURING LOCATION:
STEELCRAFT
9017 BLUE ASH ROAD
CINCINNATI, OH 45242

TITLE STEELCRAFT H SERIES SINGLE AND DOUBLE DOORS WITH TRANSOM AND SIDELITE FRAME
CORNER DETAILS
AND WEATHERSTRIPPING ATTACHMENT
FOR FLUSH FRAME AND MU FRAMES

SIZE	FLAT	DWG NO. 975W	SHEET 9 OF 17	REV E
SCALE: NTS	AUTOCAD			

REVISIONS				
LTR	DESCRIPTION		DATE	APPROVED
B	APPROVAL DWG	YMF	01/06/05	
C	REVISED DWG	YMF	09/12/08	
D	REVISED DWG	JPD	08/30/13	
E	REVISED DWG	JPD	03/11/15	

GORDON D. THOMAS LICENSE NO. 46718 Gordon Thomas Date 3759 Blossom Court Mason, OH 45040 Florida #46718 STATE OF FLORIDA PROFESSIONAL ENGINEER

PRODUCT REVISED
as complying with the Florida
Building Code
Acceptance No. 14-0827.04
Expiration Date 5/5/16
By Ishaq I. Chaudhary
Miami Dade Product Control

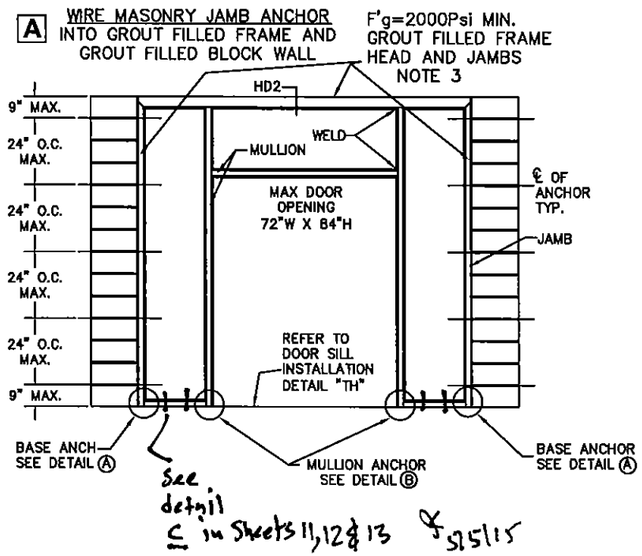

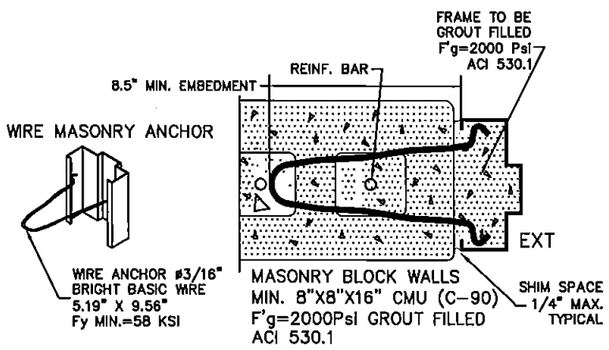

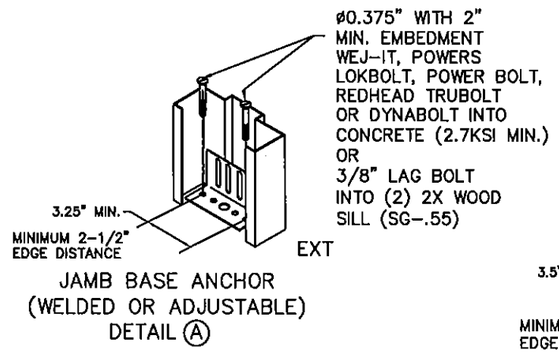

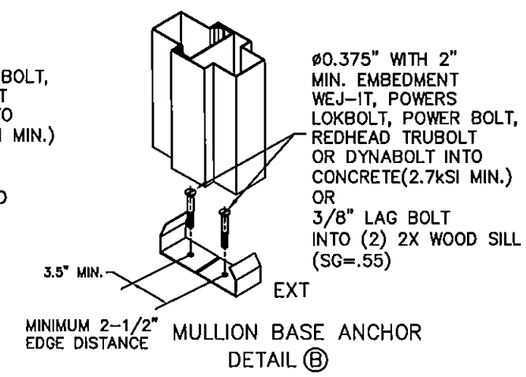

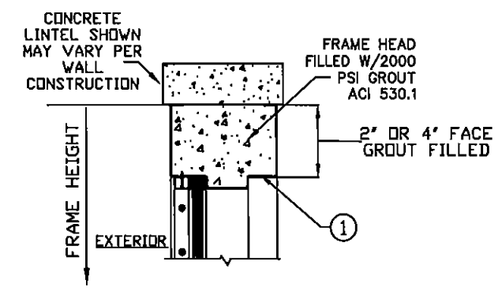

HD2 - FRAME HEAD SECTION
SIDE VIEW SHOWN GLAZED

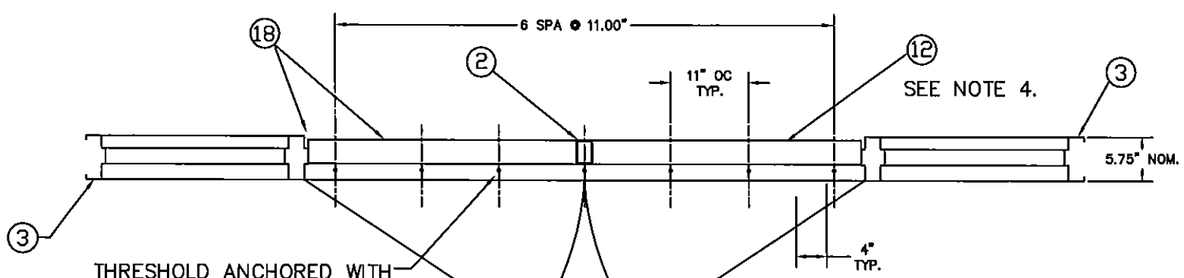

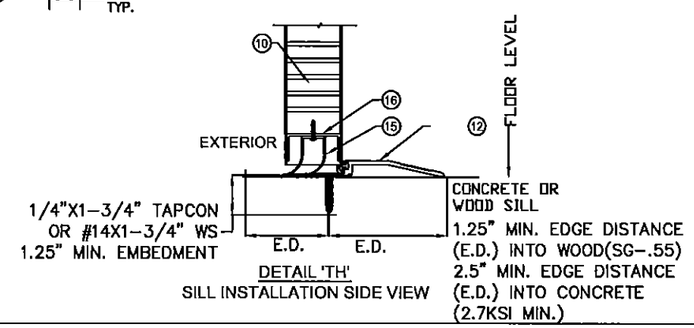

DETAIL 'TH'
SILL INSTALLATION SIDE VIEW

NOTES:
1. WALLS MUST BE DESIGNED TO MEET THE REQUIREMENTS OF THE BUILDING CODE.
2. NUMBER OF ANCHORS FOR VARIOUS OPENING HEIGHTS IS LIMITED BY MAXIMUM DISTANCE BETWEEN ANCHORS, SHOWN ON THIS SHEET.
3. HEAD SECTION CAN HAVE 4" FACE WHEN GROUTED FULL 2000 PSI GROUT ACI 530.1; WITHIN MAX FRAME HEIGHT TESTED.
4. APPLY CAULK AS NEEDED

BEND RADIUS

THIRD ANGLE PROJECTION

DRAWN YMF	DATE 02.25.03
CHECKED	
APPROVED	
ENG. APPVL	

SCHLAGE LOCK COMPANY, LLC
6810 HILLSDALE COURT
INDIANAPOLIS, IN 46250

MANUFACTURING LOCATION:
STEELCRAFT
9017 BLUE ASH ROAD
CINCINNATI, OH 45242

TITLE STEELCRAFT SINGLE AND DOUBLE DOORS WITH TRANSOM & SIDELITE FRAME
ANCHOR DETAILS / MOUNTING CONDITIONS

SIZE	FLAT	DWG NO. 975W	SHEET 10 OF 17	REV E
SCALE: NTS	AUTOCAD			

REVISIONS				
LTR	DESCRIPTION		DATE	APPROVED
B	APPROVAL DWG	YMF	01/06/05	
C	REVISED DWG	YMF	09/12/08	
D	REVISED DWG	JPD	08/30/13	
E	REVISED DWG	JPD	03/11/15	

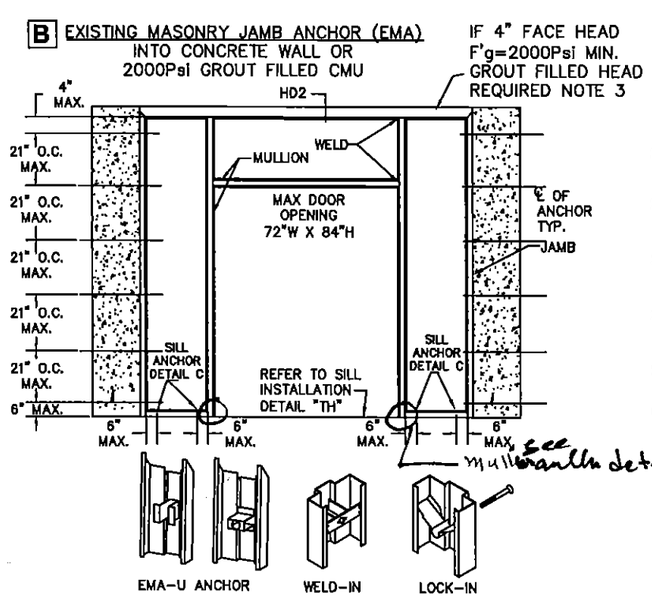

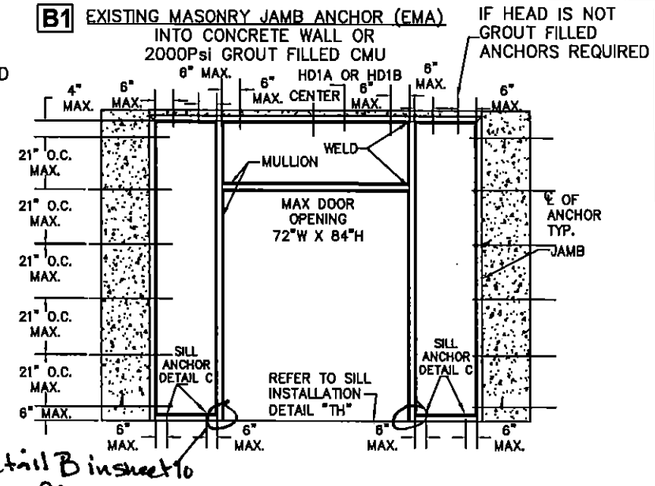

See mullion detail B in sheet 10 & 5/5/15

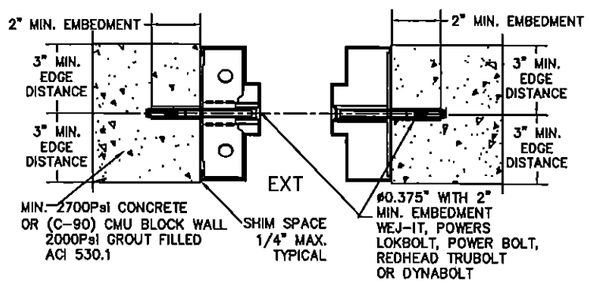

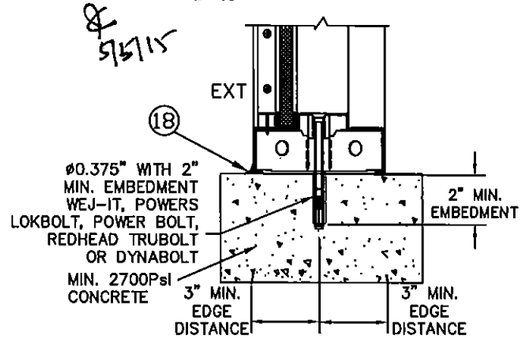

C SIDELITE SILL ANCHOR
DETAIL INTO CONCRETE
(2.7KSI MIN.)
SHOWN GLAZED
(SIDE VIEW)

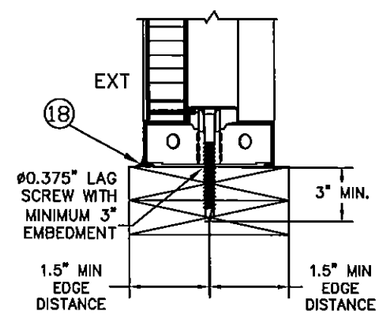

C SIDELITE SILL ANCHOR
DETAIL INTO WOOD
(2) 2X (SG=.55)
SHOWN WITH PANEL
(SIDE VIEW)

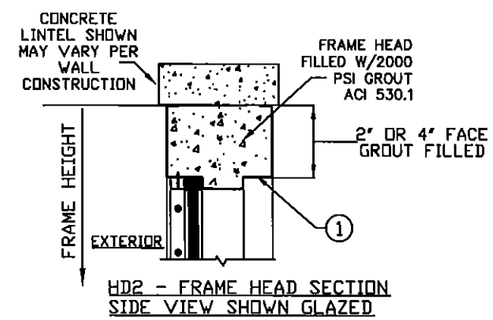

HD2 - FRAME HEAD SECTION
SIDE VIEW SHOWN GLAZED

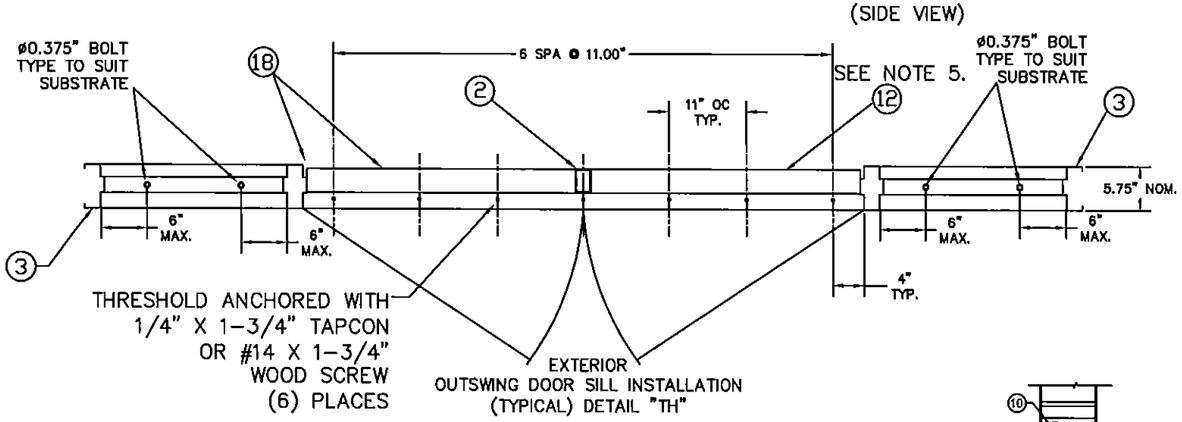

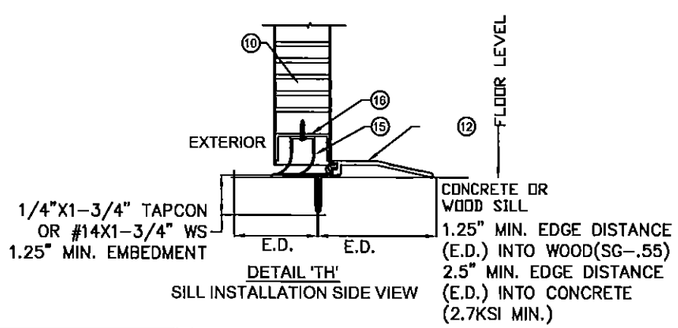

DETAIL 'TH'
SILL INSTALLATION SIDE VIEW

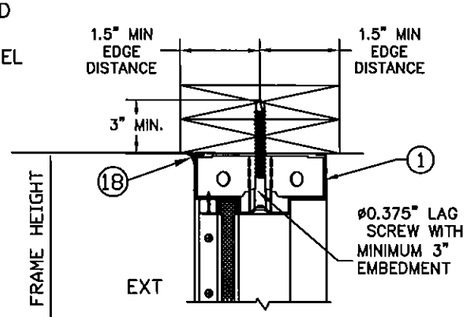

HD1B - 2" FACE FRAME HEAD
SECTION WITHOUT GROUT
ANCHOR DETAIL INTO WOOD
(2) 2X (SG=.55)
SHOWN WITH GLAZING - SIDE VIEW

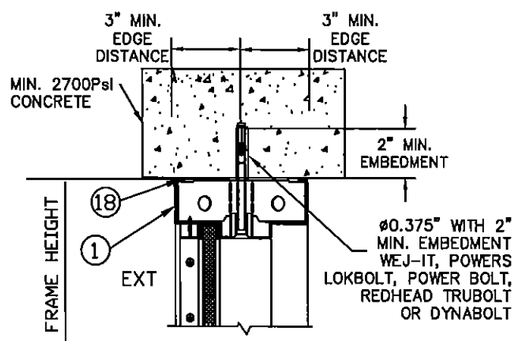

HD1A - 2" FACE FRAME HEAD
SECTION WITHOUT GROUT
ANCHOR DETAIL INTO CONCRETE
LINTEL (2.7KSI MIN.)
SHOWN WITH GLAZING - SIDE VIEW

PRODUCT REVISED
as complying with the Florida
Building Code
Acceptance No. 14-0827.04
Expiration Date 5/5/16
By Shery L. Chanda
Miami Dade Product Control

NOTES:
1. WALLS MUST BE DESIGNED TO MEET THE REQUIREMENTS OF THE BUILDING CODE.
2. NUMBER OF ANCHORS FOR VARIOUS OPENING HEIGHTS IS LIMITED BY MAXIMUM DISTANCE BETWEEN ANCHORS, SHOWN ON THIS SHEET.
3. HEAD SECTION CAN HAVE 4" FACE WHEN GROUTED FULL 2000 PSI GROUT ACI 530.1 WITHIN MAX FRAME HEIGHT TESTED.
4. APPLY CAULK AS NEEDED

BEND RADIUS

THIRD ANGLE PROJECTION

DRAWN YMF	DATE 02.25.03
CHECKED	
APPROVED	
ENG. APPVL	

SCHLAGE LOCK COMPANY, LLC
6810 HILLSDALE COURT
INDIANAPOLIS, IN 46250

MANUFACTURING LOCATION:
STEELCRAFT
9017 BLUE ASH ROAD
CINCINNATI, OH 45242

TITLE STEELCRAFT SINGLE AND DOUBLE DOORS WITH TRANSOM & SIDELITE FRAME
ANCHOR DETAILS / MOUNTING CONDITIONS

SIZE	FLAT	DWG NO. 975W	SHEET 11 OF 17	REV E
SCALE: NTS	AUTOCAD			

C WOOD STUD JAMB ANCHOR

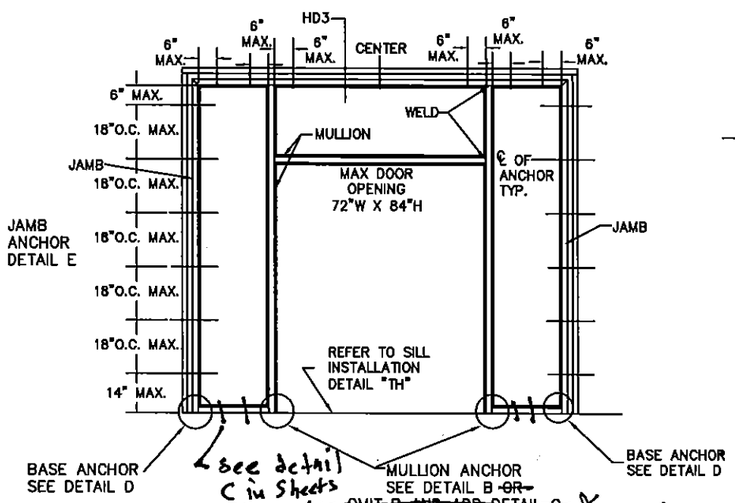

see detail C in Sheets 11, 12 & 13 & 5/5/15

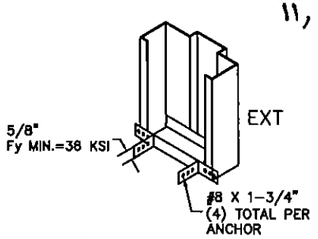

JAMB BASE ANCHOR
(WELDED OR ADJUSTABLE)
DETAIL Ⓓ

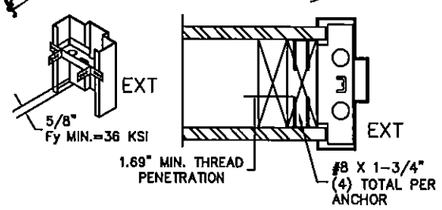

WOOD STUD WALL (SEE NOTE 1)
WOOD STUD OR UNIVERSAL ANCHOR
(LOCK-IN OR WELD-IN)
DETAIL Ⓔ

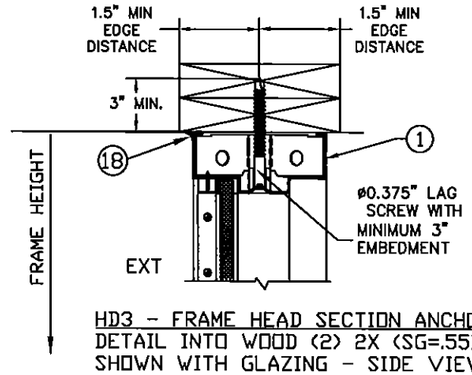

HD3 - FRAME HEAD SECTION ANCHOR
DETAIL INTO WOOD (2) 2X (SG=.55)
SHOWN WITH GLAZING - SIDE VIEW

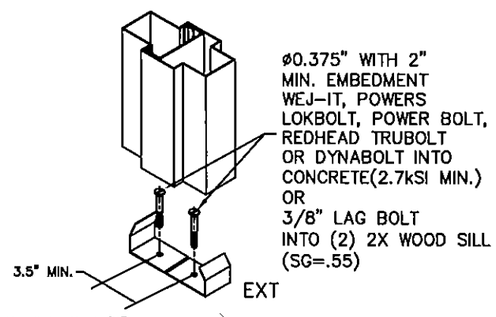

MULLION BASE ANCHOR
DETAIL Ⓑ

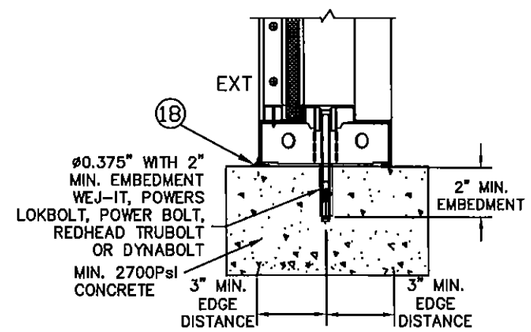

Ⓒ SIDELITE SILL ANCHOR
DETAIL INTO CONCRETE
(2.7KSI MIN.)
SHOWN GLAZED
(SIDE VIEW)

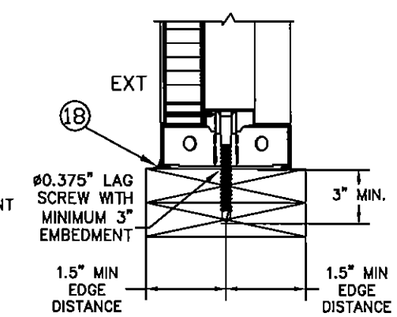

Ⓒ SIDELITE SILL ANCHOR
DETAIL INTO WOOD
(SG=.55)
SHOWN WITH PANEL
(SIDE VIEW)

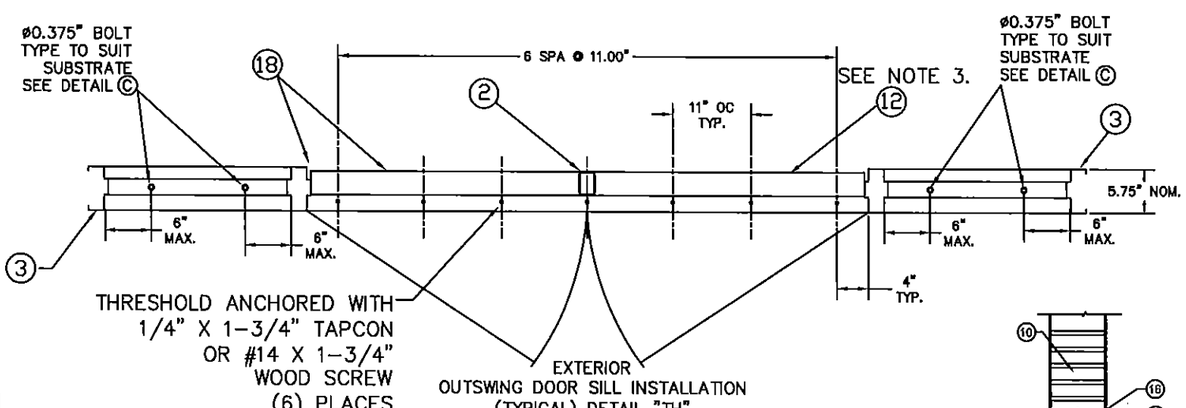

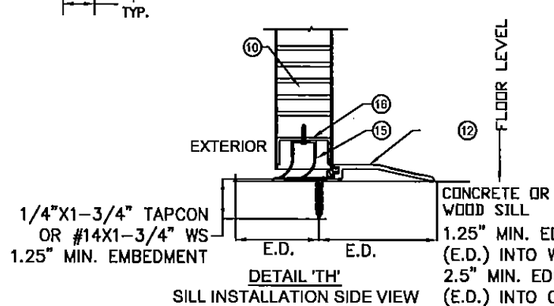

DETAIL 'TH'
SILL INSTALLATION SIDE VIEW

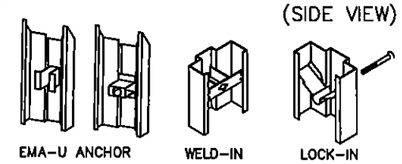

GORDON D. THOMAS
LICENSED
No. 46718
Gordon Thomas Date
3759 Blossom Court
Mason, OH 45040
Florida #46718
STATE OF FLORIDA
PROFESSIONAL ENGINEER

PRODUCT REVISED
as complying with the Florida Building Code
Acceptance No. H-0827-04
Expiration Date 5/5/16
By
Miami Dade Product Control

REVISIONS				
LTR	DESCRIPTION		DATE	APPROVED
B	APPROVAL DWG	YMF	01/06/05	
C	REVISED DWG	YMF	08/27/08	
D	REVISED DWG	JPD	08/30/13	
E	REVISED DWG	JPD	03/11/15	

NOTES:
1. WOOD STUD WALLS MUST BE DESIGNED TO MEET THE REQUIREMENTS OF THE BUILDING CODE AND MUST CARRY320#/FT LOAD AND TO BE REVIEWED BY BUILDING OFFICIAL.
2. NUMBER OF ANCHORS FOR VARIOUS OPENING HEIGHTS IS LIMITED BY MAXIMUM ON CENTER DISTANCE BETWEEN ANCHORS, SHOWN ON THIS SHEET.
3. APPLY CAULK AS NEEDED.

BEND RADIUS
THIRD ANGLE PROJECTION

DRAWN YMF	DATE 02.25.03
CHECKED	
APPROVED	
ENG. APPVL	

SCHLAGE LOCK COMPANY, LLC
6810 HILLSDALE COURT
INDIANAPOLIS, IN 46032

MANUFACTURING LOCATION:
STEELCRAFT
9017 BLUE ASH ROAD
CINCINNATI, OH 45242

TITLE STEELCRAFT H SERIES SINGLE AND DOUBLE DOORS WITH TRANSOM & SIDELITE FRAME
ANCHOR DETAILS / MOUNTING CONDITIONS

SIZE	FLAT	DWG NO. 975W	SHEET 12 OF 17	REV E
SCALE: NTS	AUTOCAD			

REVISIONS				
LTR	DESCRIPTION		DATE	APPROVED
B	APPROVAL DWG	YMF	01/06/05	
C	REVISED DWG	YMF	08/27/08	
D	REVISED DWG	JPD	08/30/13	
E	REVISED DWG	JPD	03/11/15	

GORDON D. THOMAS LICENSE 46718 STATE OF FLORIDA PROFESSIONAL ENGINEER
Gordon Thomas Date
3759 Blossom Court
Mason, OH 45040
Florida 46718

PRODUCT REVISED
as complying with the Florida
Building Code
Acceptance No. 14-0822.04
Expiration Date 5/5/16
By Ishaq I. Chunk
Miami Dade Product Control

D EXISTING WALL JAMB ANCHOR WITH LAG SCREW INTO WOOD STUD WALL

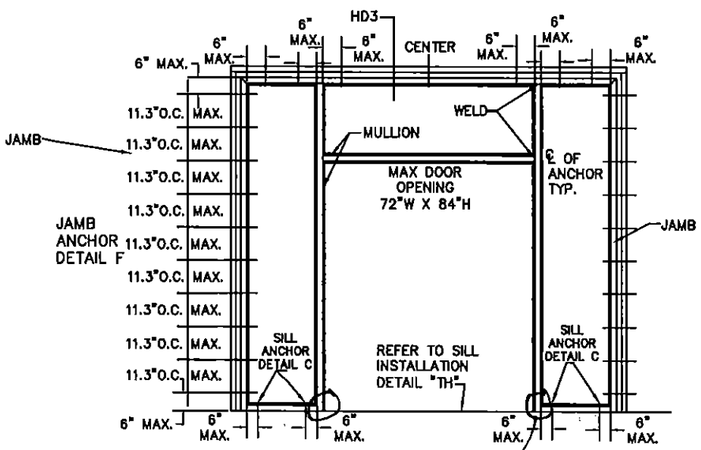

see detail B in sheets 10 & 12 & 5/5/15

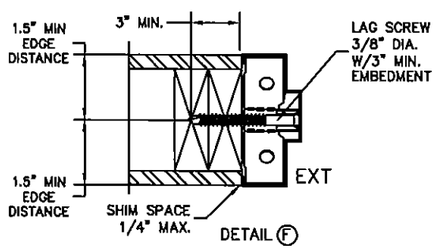

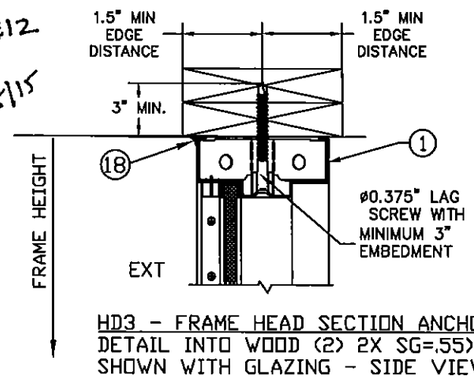

HD3 - FRAME HEAD SECTION ANCHOR
DETAIL INTO WOOD (2) 2X SG=.55)
SHOWN WITH GLAZING - SIDE VIEW

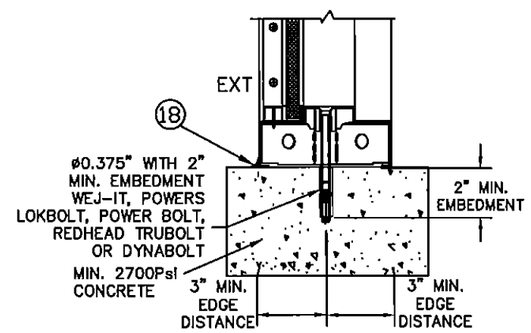

Ⓒ SIDELITE SILL ANCHOR DETAIL INTO CONCRETE (2.7KSI MIN.) SHOWN GLAZED (SIDE VIEW)

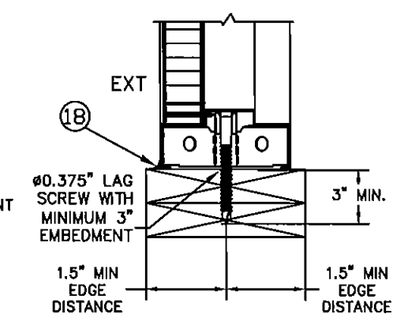

Ⓒ SIDELITE SILL ANCHOR DETAIL INTO WOOD (SG=.55) SHOWN WITH PANEL (SIDE VIEW)

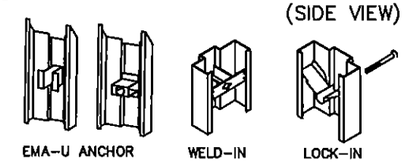

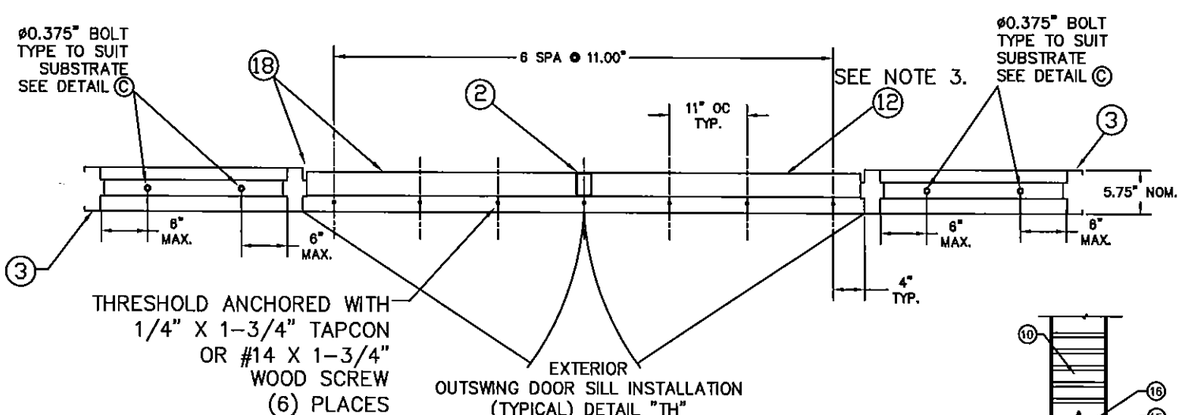

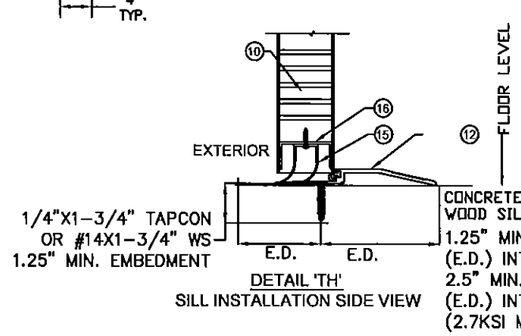

DETAIL 'TH'
SILL INSTALLATION SIDE VIEW

NOTES:
1. WOOD STUD WALLS MUST BE DESIGNED TO MEET THE REQUIREMENTS OF THE BUILDING CODE AND MUST CARRY320#/FT LOAD AND TO BE REVIEWED BY BUILDING OFFICIAL.
2. NUMBER OF ANCHORS FOR VARIOUS OPENING HEIGHTS IS LIMITED BY MAXIMUM ON CENTER DISTANCE BETWEEN ANCHORS, SHOWN ON THIS SHEET.
3. APPLY CAULK AS NEEDED.

BEND RADIUS
THIRD ANGLE PROJECTION

DRAWN YMF	DATE 02.25.03
CHECKED	
APPROVED	
ENG. APPVL	

SCHLAGE LOCK COMPANY, LLC
6810 HILLSDALE COURT
INDIANAPOLIS, IN 46032

MANUFACTURING LOCATION:
STEELCRAFT
9017 BLUE ASH ROAD
CINCINNATI, OH 45242

TITLE STEELCRAFT H SERIES SINGLE AND DOUBLE DOORS WITH TRANSOM & SIDELITE FRAME
ANCHOR DETAILS / MOUNTING CONDITIONS

SIZE	FLAT	DWG NO.	SHEET	REV
		975W	13 OF 17	E

SCALE: NTS AUTOCAD

REVISIONS				
LTR	DESCRIPTION		DATE	APPROVED
B	APPROVAL DWG	YMF	01/06/05	
C	REVISED DWG	YMF	08/27/08	
D	REVISED DWG	JPD	08/30/13	
E	REVISED DWG	JPD	03/11/15	

E STEEL STUD JAMB ANCHOR

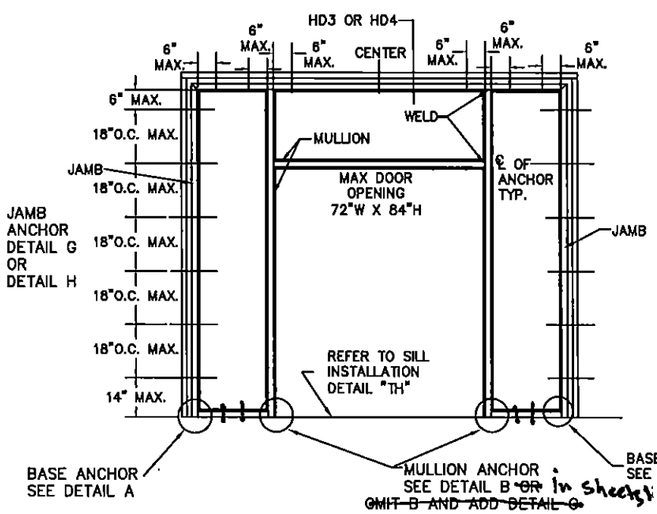

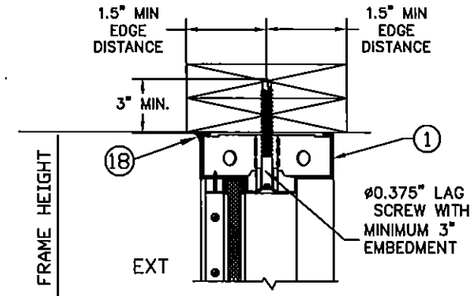

HD3 - FRAME HEAD SECTION ANCHOR
DETAIL INTO WOOD (2) 2X (SG=.55)
SHOWN WITH GLAZING - SIDE VIEW

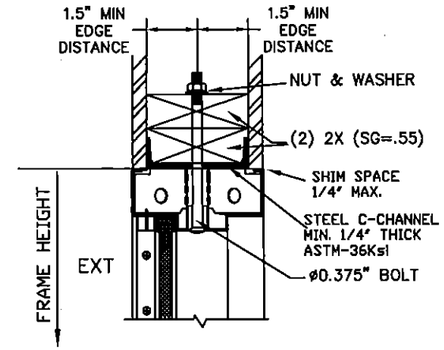

HD4 - FRAME HEAD SECTION ANCHOR
DETAIL STEEL C-CHANNEL
MIN. 1/4" ASTM-36Ksi
SHOWN WITH GLAZING - SIDE VIEW

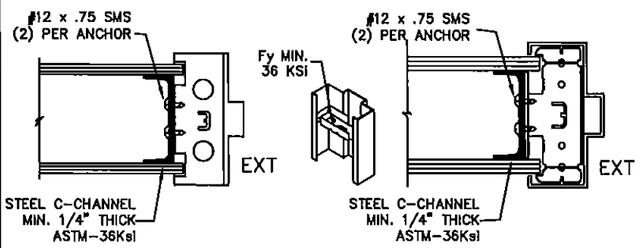

STEEL STUD ANCHOR WELD-IN OR LOCK-IN

STEEL STUD OR UNIVERSAL ANCHOR (LOCK-IN OR WELD-IN)

STEEL C-CHANNEL STUD WALLS SEE NOTE 1.

DETAIL G

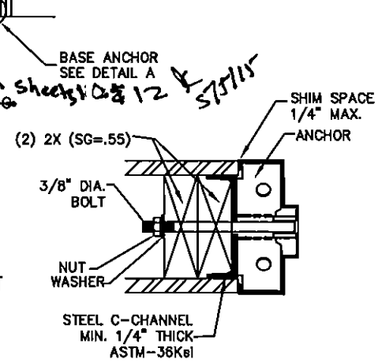

STEEL C-CHANNEL STUD BOLTED INSTALTION

DETAIL H

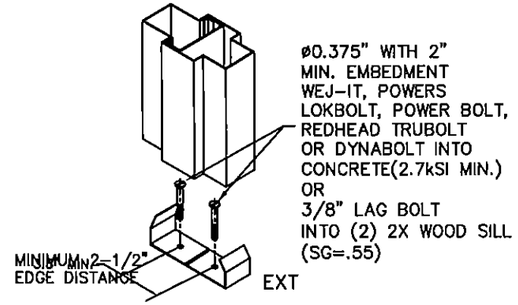

MULLION BASE ANCHOR
DETAIL B

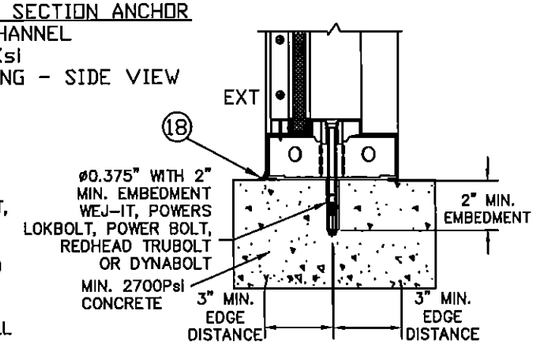

C SIDELITE SILL ANCHOR
DETAIL INTO CONCRETE
(2.7KSI MIN.)
SHOWN GLAZED
(SIDE VIEW)

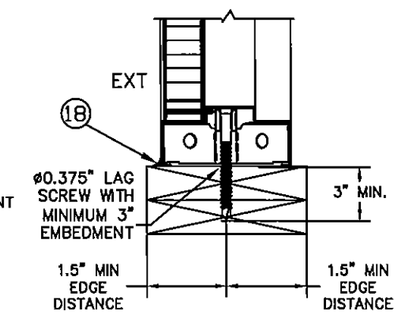

C SIDELITE SILL ANCHOR
DETAIL INTO WOOD
(SG=.55)
SHOWN WITH PANEL
(SIDE VIEW)

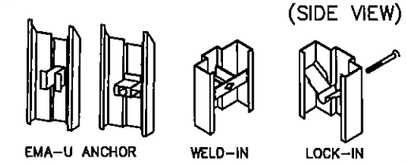

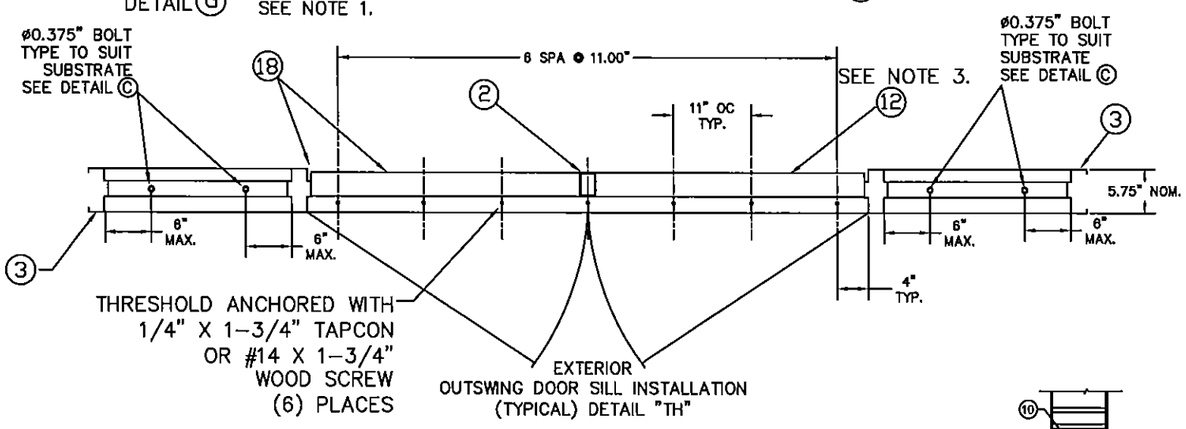

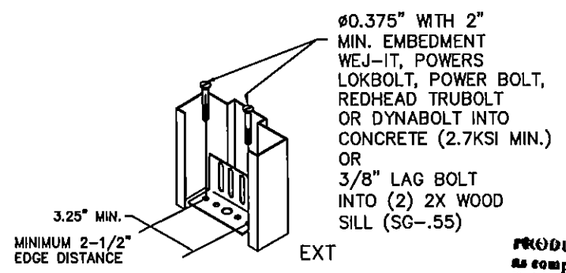

JAMB BASE ANCHOR
(WELDED OR ADJUSTABLE)
DETAIL A

PRODUCT REVISED
as complying with the Florida
Building Code
Acceptance No 14-0827.04
Expiration Date 5.5.16
By
Miami Dade Product Control

GORDON D. THOMAS
LICENSE
No. 46718
PROFESSIONAL ENGINEER
STATE OF FLORIDA
Gordon Thomas
9759 Blossom Oak
Munch, OH 45030
Florida #46718
Date 9/12/15

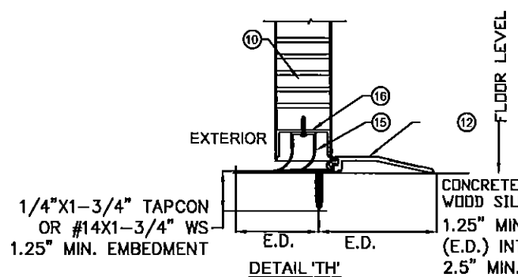

DETAIL 'TH'
SILL INSTALLATION SIDE VIEW

NOTES:
1. STEEL STUD WALLS MUST BE DESIGNED TO MEET THE REQUIREMENTS OF THE BUILDING CODE AND MUST CARRY320#/FT LOAD AND TO BE REVIEWED BY BUILDING OFFICIAL.
2. NUMBER OF ANCHORS FOR VARIOUS OPENING HEIGHTS IS LIMITED BY MAXIMUM ON CENTER DISTANCE BETWEEN ANCHORS, SHOWN ON THIS SHEET.
3. APPLY CAULK AS NEEDED.

BEND RADIUS

THIRD ANGLE PROJECTION

DRAWN YMF	DATE 02.25.03
CHECKED	
APPROVED	
ENG. APPVL	

SCHLAGE LOCK COMPANY, LLC
6810 HILLSDALE COURT
INDIANAPOLIS, IN 46032

MANUFACTURING LOCATION:
STEELCRAFT
9017 BLUE ASH ROAD
CINCINNATI, OH 45242

TITLE STEELCRAFT H SERIES SINGLE AND DOUBLE DOORS WITH TRANSOM & SIDELITE FRAME
ANCHOR DETAILS / MOUNTING CONDITIONS

SIZE	FLAT	DWG NO. 975W	SHEET 14 OF 17	REV E
SCALE: NTS	AUTOCAD			

REVISIONS			
LTR	DESCRIPTION	DATE	APPROVED
D	APPROVAL DWG JPD	08/30/13	
E	REVISED JPD	03/11/15	

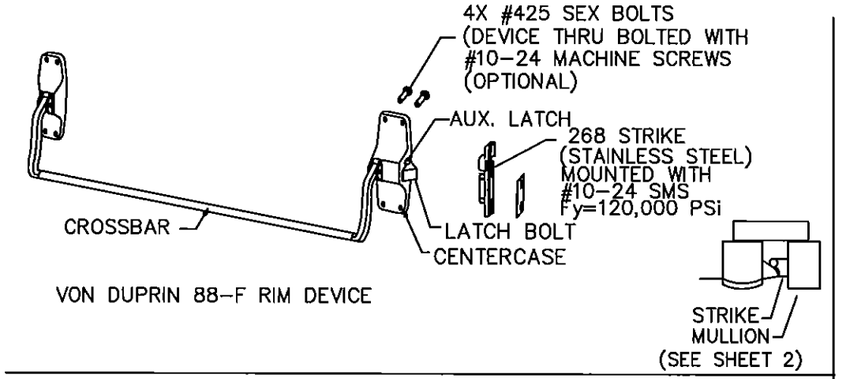

VON DUPRIN 88-F RIM DEVICE

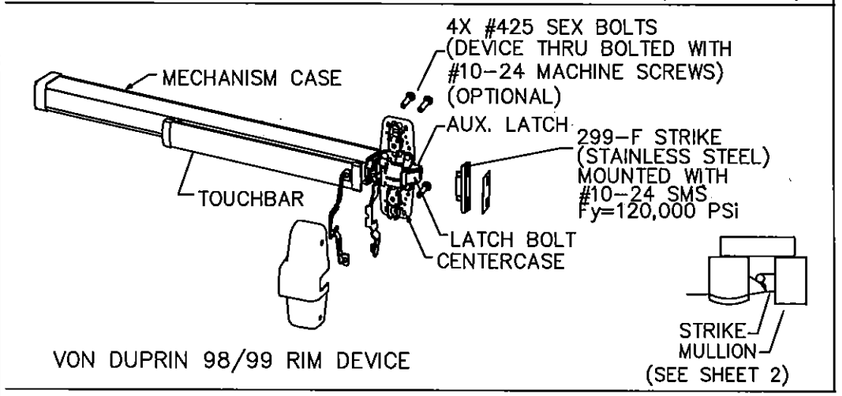

VON DUPRIN 98/99 RIM DEVICE

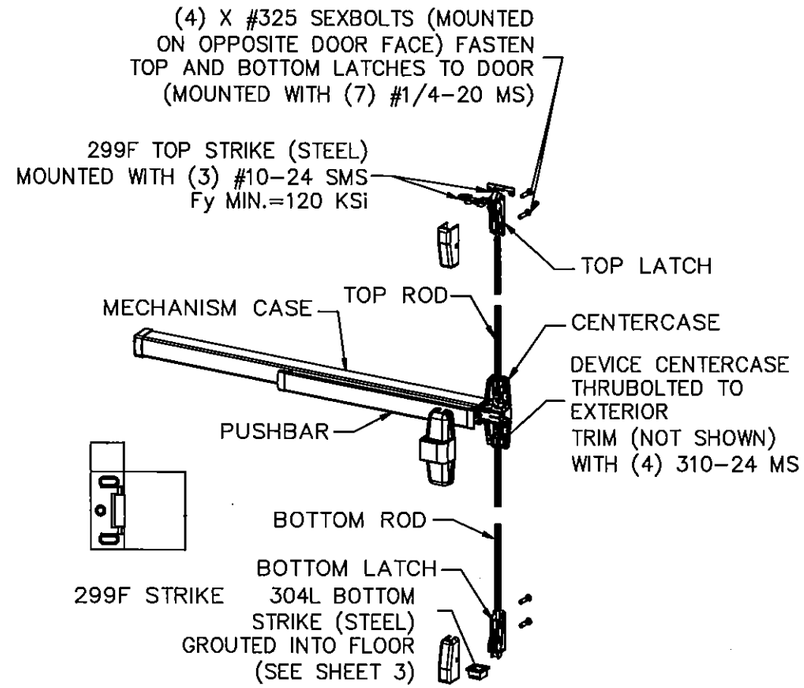

VON DUPRIN 98/9927
SURFACE VERTICAL ROD DEVICE

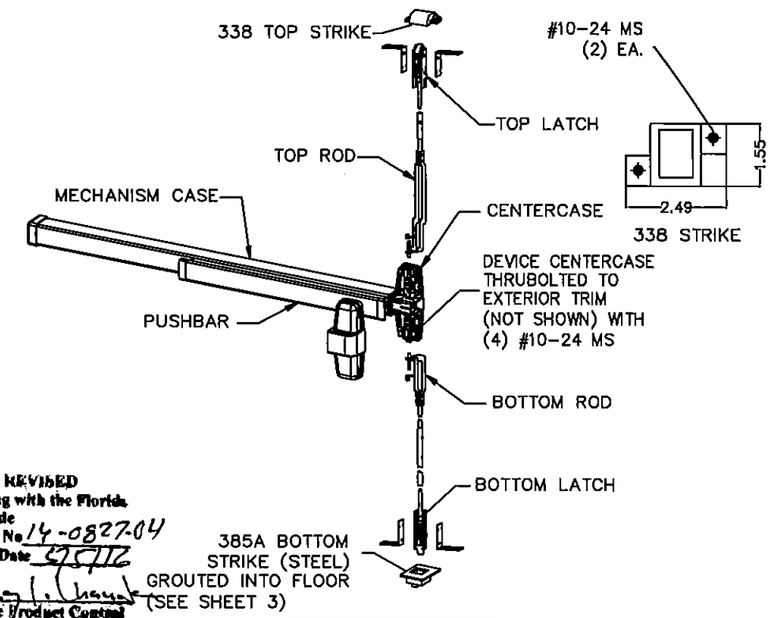

VON DUPRIN 98/9947-F
CONCEALED VERTICAL ROD DEVICE

PRODUCT REVISED
as complying with the Florida
Building Code
Acceptance No 14-0827.04
Expiration Date 5/5/16
By [signature]
Miami Dade Product Control

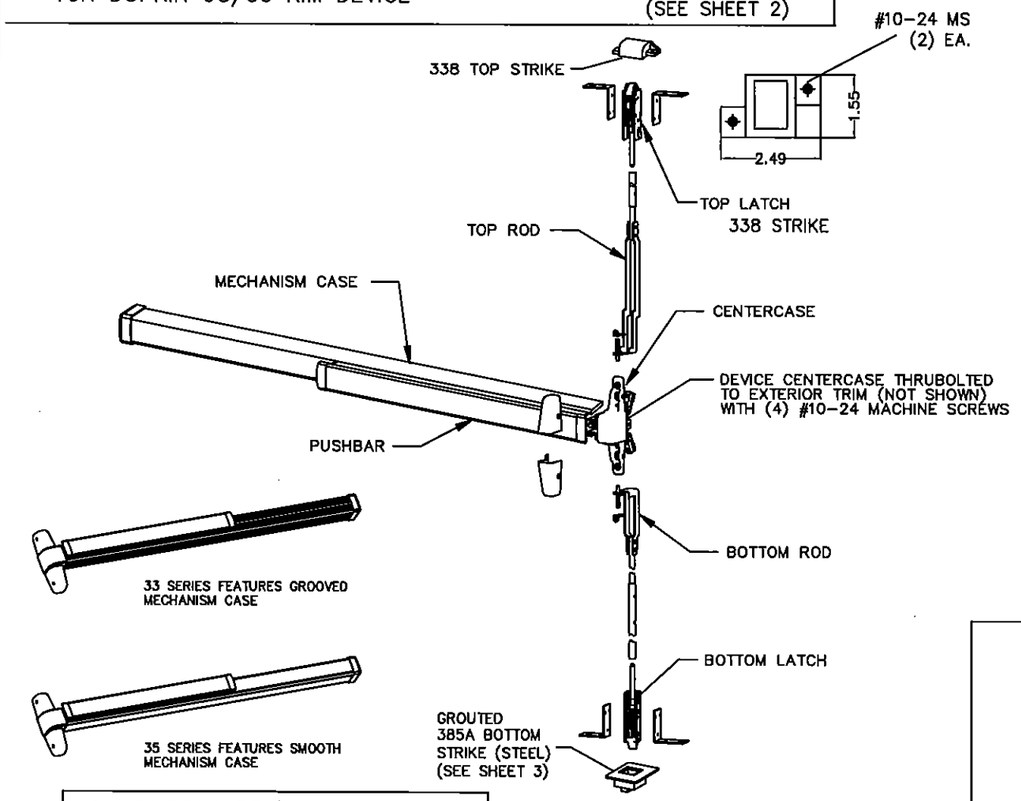

VON DUPRIN 33/3547A-F
CONCEALED VERTICAL ROD DEVICE

NOTES:
1. ELECTRICAL FUNCTIONS/INSTALLATON AND FIRE RATINGS ARE NOT PART OF THIS APPROVAL AND TO BE REVIEWED AND APPROVED BY BUILDING OFFICIAL HAVING JURISDICTION.
2. EXIT HARDWARE OPTIONS:
FOR 98/99 & XP98/99 SERIES - FUNCTIONS E, RX, LX, SS, EL, CX, F; TRIM: ALL APPLICABLE TRIMS AVAILABLE.
FOR 88-F SERIES - FUNCTION E; TRIM: ALL APPLICABLE TRIMS AVAILABLE. PN MODEL OFFERED.
FOR 33/35-F SERIES - FUNCTIONS RX, LX, EL, SS; TRIM: ALL APPLICABLE TRIMS AVAILABLE.

GORDON D. THOMAS
LICENSE
No. 46718
STATE OF FLORIDA
PROFESSIONAL ENGINEER

Gordon D. Thomas Date
3759 Blossom Court
Mason, OH 45040
Florida #46718

BEND RADIUS	SCHLAGE LOCK COMPANY, LLC 6810 HILLSDALE COURT INDIANAPOLIS, IN 46250	MANUFACTURING LOCATION: STEELCRAFT 9017 BLUE ASH ROAD CINCINNATI, OH 45242
THIRD ANGLE PROJECTION	TITLE STEELCRAFT H SERIES SINGLE AND DOUBLE DOORS WITH SIDELITE AND TRANSOM FRAMES EXIT DEVICE OPTIONS	
DRAWN JPD / DATE 12/06/12		
CHECKED		
APPROVED	SIZE FLAT / DWG NO. 975W / SHEET 15 OF 17	REV E
ENG. APPVL	SCALE: NTS / AUTOCAD	

REVISIONS			
LTR	DESCRIPTION	DATE	APPROVED
A	APPROVAL DWG JPD	03/11/15	

PRODUCT REVISED
as complying with the Florida
Building Code
Acceptance No. 14-0827.04
Expiration Date 5/5/16
By Ichna L. Uhrich
Miami Dade Product Control

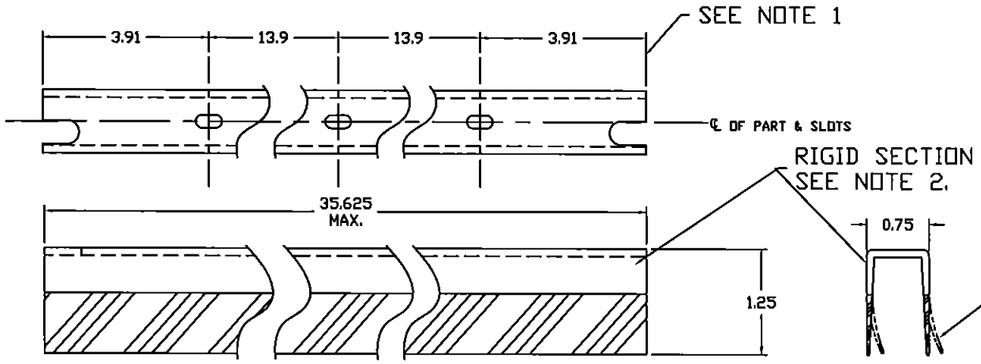

(15) FAS-SEAL DOOR SWEEP

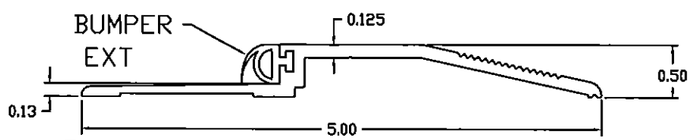

(12) ZERO INT'L 566 SERIES THRESHOLD WITH NEOPRENE BUMPER

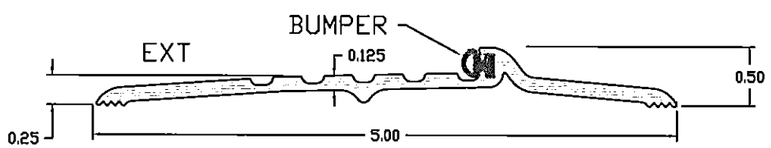

(12) ZERO INT'L 65A SERIES THRESHOLD WITH NEOPRENE BUMPER

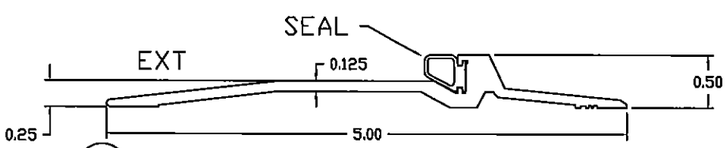

(12) PEMKO 2005 SERIES THRESHOLD WITH SILICONE, VINYL OR PILE SEAL

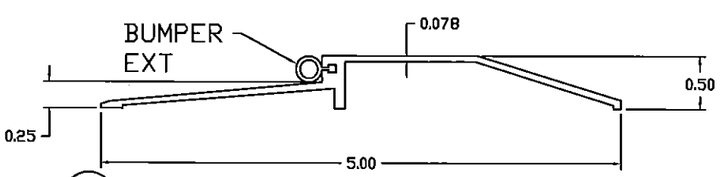

(12) NATIONAL GUARD 950 SERIES THRESHOLD WITH SILICONE, VINYL OR NEOPRENE BUMPER

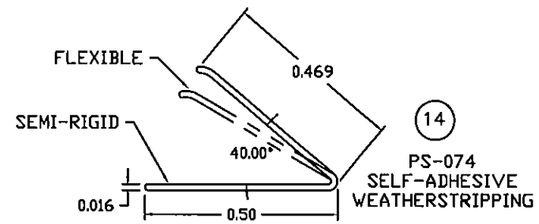

(14) PS-074 SELF-ADHESIVE WEATHERSTRIPPING

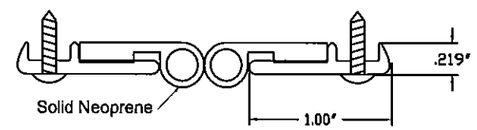

(17) ZERO INT'L 328 SERIES SPLIT ASTRAGAL WITH NEOPRENE SEAL

(17) PEMCO 303 SERIES SPLIT ASTRAGAL WITH SILICONE, VINYL OR PEMKOPRENE SEAL

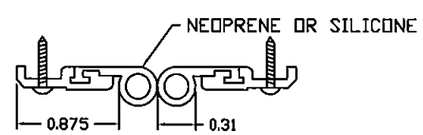

(17) NATIONAL GUARD 137 SERIES SPLIT ASTRAGAL WITH NEOPRENE OR SILICONE SEAL

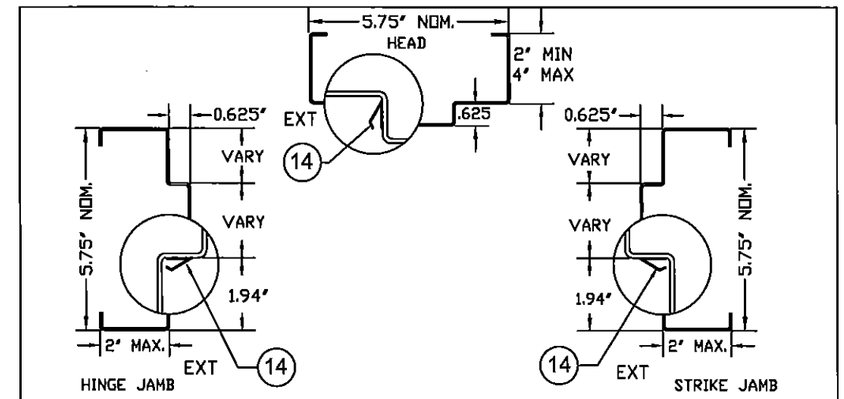

PERIMETER DOOR SEAL INSTALLATION IN HEAD AND JAMBS

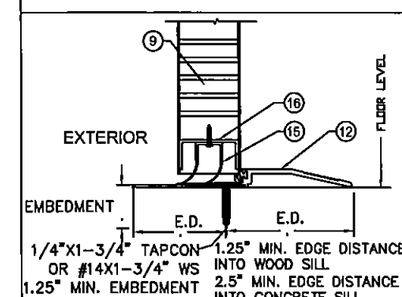

SEE SHEETS 10 THROUGH 14
BOTTOM OF DOOR
WEATHERSTRIPPING AND SILL INSTALLATION

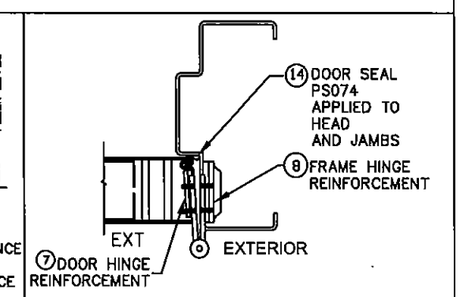

HINGE SIDE
WEATHERSTRIPPING INSTALLATION

NOTES:

1. SLOT LOCATIONS (ITEM #15) MAY VARY WITH DIFFERENT DOOR WIDTH.
2. DOOR SWEEP (ITEM #15) RIGID SECTION IS MADE OF PRO-FAX #PD-199 POLYPROPYLENE HOMOPOLYMER
3. DOOR SWEEP (ITEM#15) FLEXIBLE SECTION IS MADE OF SANTOPRENE #101-73 73 DUROMETER - SHORE A SCALE

GORDON D. THOMAS
LICENSE
No. 46718
STATE OF FLORIDA
PROFESSIONAL ENGINEER

Gordon Thomas
3759 Blossom Court
Mason, OH 45040
Florida #46718

Date

BEND RADIUS

THIRD ANGLE PROJECTION

DRAWN JPD	DATE 03/11/15
CHECKED	
APPROVED	
ENG. APPVL	

SCHLAGE LOCK COMPANY, LLC
6810 HILLSDALE COURT
INDIANAPOLIS, IN 46250

MANUFACTURING LOCATION:
STEELCRAFT
9017 BLUE ASH ROAD
CINCINNATI, OH 45242

TITLE STEELCRAFT H SERIES SINGLE AND DOUBLE DOORS WITH TRANSOM & SIDELITE FRAME
DOUBLE DOORS ACCESSORIES
BOTTOM SWEEP
THRESHOLDS, SPLIT ASTRAGALS
AND WEATHERSTRIPPING

SIZE	FLAT	DWG NO. 975W	SHEET 16 OF 17	REV A
SCALE: NTS	AUTOCAD			

REVISIONS			
LTR	DESCRIPTION	DATE	APPROVED
A	APPROVAL DWGS.	03/11/15	

STEEL BUTT HINGE
4.5" X 4.5" STD. WT. MIN.
IVES 5BB1/3CB1
STANLEY FBB179/CB1900
HAGER 1279
.134" MIN. LEAF THICKNESS
Fy MIN. = 36ksi

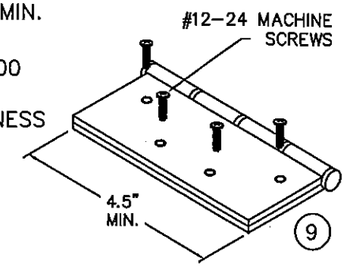

HEAVY DUTY
CONTINUOUS HINGE
IVES 112HD & 224HD
ALUMINUM 6036-T6 MIN
.110" MIN. LEAF THICKNESS

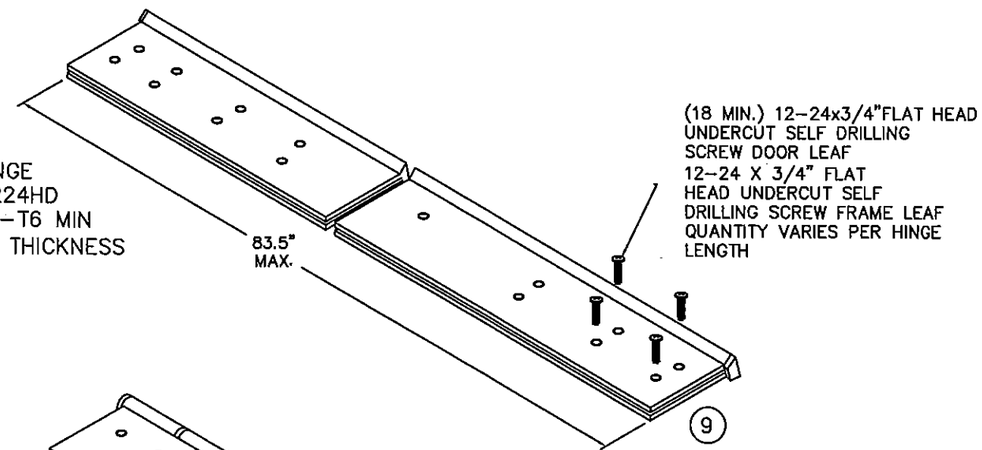

STEEL CONTINUOUS HINGE
IVES 600
.075 MIN. (14GA) LEAF THICKNESS
1012 COLD ROLLED STEEL
Fy MIN. 45ksi
STAINLESS STEEL CONTINUOUS HINGE
IVES 700, 700CS
.075" (14Ga.) MIN. LEAF THICKNESS
304 STAINLESS STEEL
Fy MIN. 31ksi

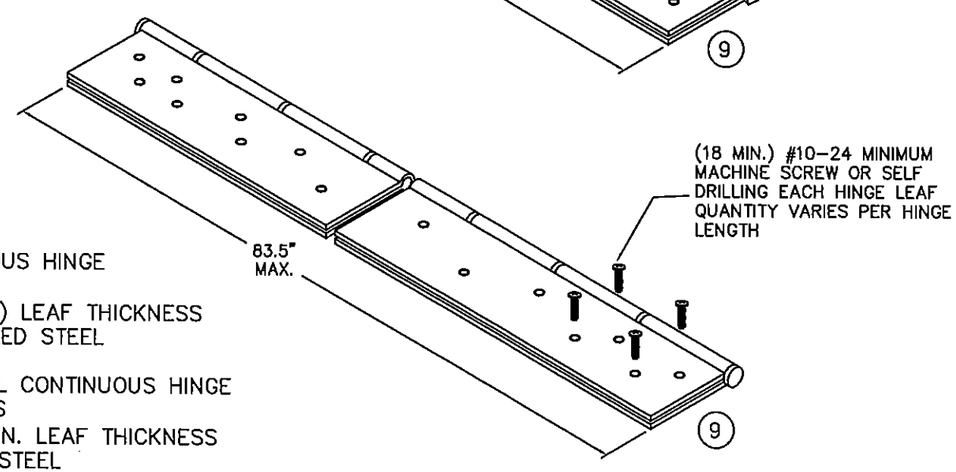

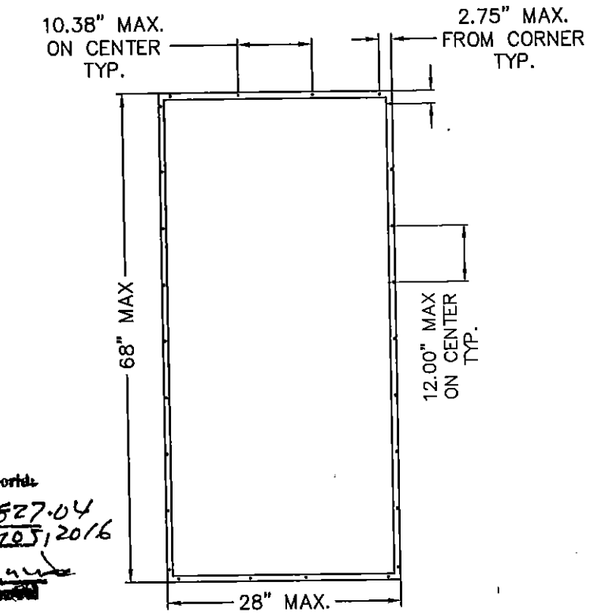

ANEMOSTAT SG-10
HIGH SECURITY METAL
VISION FRAME

PRODUCT REVISED
as complying with the Florida
Building Code
Acceptance No 14-0827.04
Expiration Date MAY 05, 2016
By [signature]
Miami Dade Product Control

NOTES:

1. HARDWARE INSTALLATION IS PER MANUFACTURER'S INSTRUCTIONS

CONTINUOUS HINGE NOTES:
1. QUANTITY OF SCREWS VARIES PER HINGE LENGTH, MANUFACTURER AND MODEL NUMBER
2. SCREW SPACING VARIES PER HINGE LENGTH, MANUFACTURER AND MODEL NUMBER
3. INSTALL HINGES PER THE MANUFACTURERS INSTALLATION INSTRUCTIONS

GORDON D. THOMAS
LICENSE
No. 46718
STATE OF FLORIDA
PROFESSIONAL ENGINEER

Gordon Thomas Date
3759 Blossom Court
Mason, OH 45040
Florida #46718

BEND RADIUS		SCHLAGE LOCK COMPANY, LLC 6810 HILLSDALE COURT INDIANAPOLIS, IN 46250	MANUFACTURING LOCATION: STEELCRAFT 9017 BLUE ASH ROAD CINCINNATI, OH 45242
THIRD ANGLE PROJECTION		TITLE STEELCRAFT H SERIES SINGLE AND DOUBLE DOORS WITH TRANSOM & SIDELITE FRAME HINGE OPTIONS H-SERIES FG SINGLE AND 6070 DOUBLE OPENING FULL GLAZED CONFIGURATION W/SIDE AND TRANSOM LITES/PANEL	
DRAWN YMF	DATE 03/11/15		
CHECKED			
APPROVED		SIZE / FLAT / DWG NO. 975W / SHEET 17 OF 17	REV A
ENG. APPVL		SCALE: NTS / AUTOCAD	