MIAMI-DADE COUNTY
DEPARTMENT OF REGULATORY AND ECONOMIC RESOURCES (RER)
BOARD AND CODE ADMINISTRATION DIVISION

MIAMI-DADE COUNTY
PRODUCT CONTROL SECTION
11805 SW 26 Street, Room 208
Miami, Florida 33175-2474
T (786) 315-2590 F (786) 315-2599
www.miamidade.gov/economy

NOTICE OF ACCEPTANCE (NOA)

York / Johnson Controls, Inc.
1499 East Philadelphia Street
York, PA 17403

SCOPE:
This NOA is being issued under the applicable rules and regulations governing the use of construction materials. The documentation submitted has been reviewed and accepted by Miami-Dade County RER- Product Control Section to be used in Miami Dade County and other areas where allowed by the Authority Having Jurisdiction (AHJ).

This NOA shall not be valid after the expiration date stated below. The Miami-Dade County Product Control Section (In Miami Dade County) and/or the AHJ (in areas other than Miami Dade County) reserve the right to have this product or material tested for quality assurance purposes. If this product or material fails to perform in the accepted manner, the manufacturer will incur the expense of such testing and the AHJ may immediately revoke, modify, or suspend the use of such product or material within their jurisdiction. RER reserves the right to revoke this acceptance, if it is determined by Miami-Dade County Product Control Section that this product or material fails to meet the requirements of the applicable building code.

This product is approved as described herein, and has been designed to comply with the High Velocity Hurricane Zone of the Florida Building Code.

DESCRIPTION: Solution Air Handling Unit

APPROVAL DOCUMENT: Drawing No. 12-06, titled "Solution Air Handling Unit", sheets 1 through 19 of 19, and 7.1, 11.1, 11.2, prepared by Al-Farooq Corporation, dated December 10, 2012, Last revision #D dated August 22, 2014, signed and sealed by Javad Ahmad, P.E., bearing the Miami-Dade County Product Control Revision stamp with the Notice of Acceptance number and the expiration date by the Miami-Dade County Product Control Section.

MISSILE IMPACT RATING: Large and Small Missile Impact Resistant

LABELING: Each unit shall bear a permanent label with the manufacturer's name or logo, York, PA or Albany, MO and the following statement: "Miami-Dade County Product Control Approved", unless otherwise noted herein.

RENEWAL of this NOA shall be considered after a renewal application has been filed and there has been no change in the applicable building code negatively affecting the performance of this product.

TERMINATION of this NOA will occur after the expiration date or if there has been a revision or change in the materials, use, and/or manufacture of the product or process. Misuse of this NOA as an endorsement of any product, for sales, advertising or any other purposes shall automatically terminate this NOA. Failure to comply with any section of this NOA shall be cause for termination and removal of NOA.

ADVERTISEMENT: The NOA number preceded by the words Miami-Dade County, Florida, and followed by the expiration date may be displayed in advertising literature. If any portion of the NOA is displayed, then it shall be done in its entirety.

INSPECTION: A copy of this entire NOA shall be provided to the user by the manufacturer or its distributors and shall be available for inspection at the job site at the request of the Building Official.

This NOA **revises NOA# 12-1213.01** and consists of this page 1, evidence submitted pages E-1 & E-2 as well as approval document mentioned above.
The submitted documentation was reviewed by **Helmy A. Makar, P.E., M.S.**

MIAMI-DADE COUNTY APPROVED

Helmy A. Makar
05/21/2015

NOA No. 14-0903.01
Expiration Date: 12/26/2018
Approval Date: 05/21/2015

NOTICE OF ACCEPTANCE: EVIDENCE SUBMITTED

1. EVIDENCE SUBMITTED UNDER PREVIOUS APPROVAL #12-1213.01

A. DRAWINGS

1. *Drawing No. 12-06, titled "Solution Air Handling Unit", sheets 1 through 19 of 19, and 7.1, 11.1, 11.2, prepared by Al-Farooq Corporation, dated December 10, 2012, last revision #C dated October 01, 2013, signed and sealed by Javad Ahmad, P.E., on November 22, 2013.*

B. TESTS

1. *Test reports on 1) Uniform Static Air Pressure Test, Loading per TAS 202-94, 2) Large Missile Impact Test per TAS 201-94, 3) Cyclic Wind Pressure Loading per TAS 203-94, along with marked-up drawings and installation diagram of Solution Air Handling Unit, prepared by Architectural Testing, Test Report No. C0445.01-801-18, dated 05/30/2013, signed and sealed by Vinu J. Abraham, P.E.*

C. CALCULATIONS

1. *Panel and fasteners analysis prepared by Al-Farooq Corporation, dated December 13, 2012, signed and sealed by Javad Ahmad, P.E., on January 22, 2013.*

D. QUALITY ASSURANCE

1. *By Miami–Dade County Department of Regulatory and Economic Resources (RER).*

E. MATERIAL CERTIFICATIONS

1. *Test report on foam, per ASTM D 1929 and ASTM E 84 of Solution Air Handler Unit, prepared by Architectural Testing, Test Report No. D3012.02-106-18, dated 11/20/2013, signed and sealed by Gary T. Hartman, P.E.*

2. NEW EVIDENCE SUBMITTED

A. DRAWINGS

1. *Drawing No. 12-06, titled "Solution Air Handling Unit", sheets 1 through 19 of 19, and 7.1, 11.1, 11.2, prepared by Al-Farooq Corporation, dated December 10, 2012, Last revision #D dated August 22, 2014, signed and sealed by Javad Ahmad, P.E.*

B. TESTS

1. *Test reports on 1) Uniform Static Air Pressure Test, Loading per TAS 202-94, 2) Large Missile Impact Test per TAS 201-94, 3) Cyclic Wind Pressure Loading per TAS 203-94, along with marked-up drawings and installation diagram of Solution Air Handling Unit, prepared by Architectural Testing, Test Report No. D9362.01-109-18, dated 08/19/2014, signed and sealed by Michael D. Stremmel, P.E.*

Helmy A. Makar, P.E., M.S.
Product Control Unit Supervisor
NOA No. 14-0903.01
Expiration Date: 12/26/2018
Approval Date: 05/21/2015

NOTICE OF ACCEPTANCE: EVIDENCE SUBMITTED

C. CALCULATIONS

1. *Panel and fasteners analysis, 8 pages, prepared by Al-Farooq Corporation, dated August 22, 2014, signed and sealed by Javad Ahmad, P.E., on August 29, 2014.*

D. QUALITY ASSURANCE

1. *By Miami–Dade County Department of Regulatory and Economic Resources (RER).*

E. MATERIAL CERTIFICATIONS

1. *None.*

F. OTHERS

1. *Florida Building Code, 2014 Edition, compliance letter, dated August 26, 2014, prepared by Al-Farooq Corporation, signed and sealed by Javad Ahmad, P.E., on August 29, 2014.*

Helmy A. Makar, P.E., M.S.
Product Control Unit Supervisor
NOA No. 14-0903.01
Expiration Date: 12/26/2018
Approval Date: 05/21/2015

Housing Material
Exterior Walls: 18 GA Steel or 0.08" Thk Alum Min
Exterior Roof: 20 GA Steel Min
Interior Walls & Roof: 22 GA Steel Min

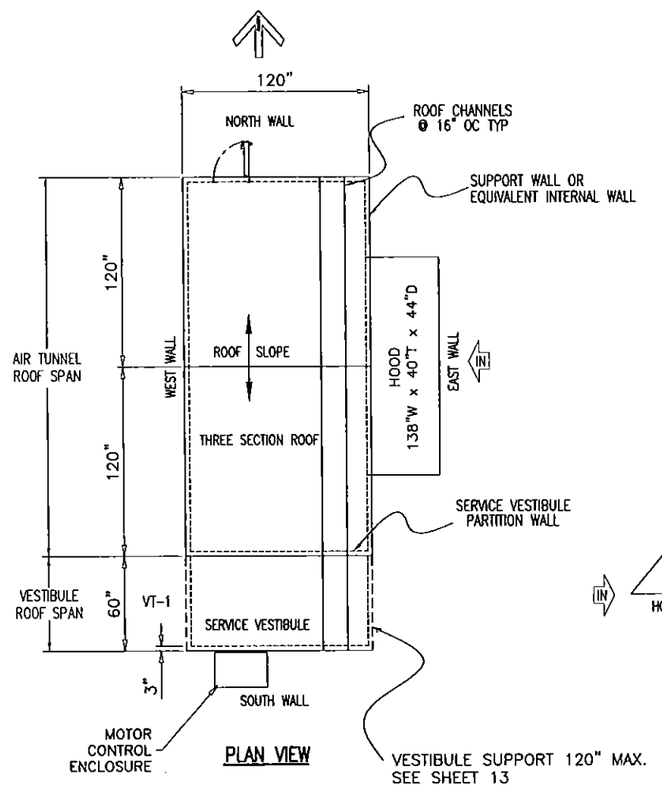

PLAN VIEW

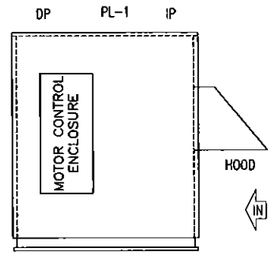

SOUTH WALL

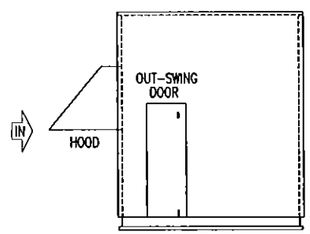

NORTH WALL

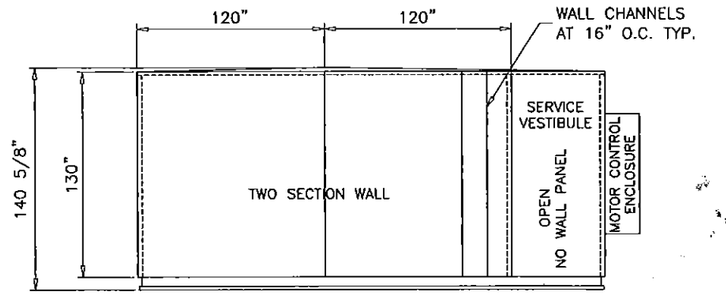

WEST WALL

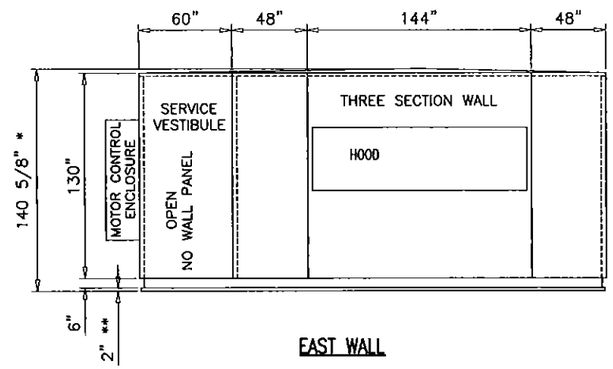

EAST WALL

* NOTE: MAX HEIGHT TO PEAK OF SLOPED ROOF
** NOTE: 2" CURB ANGLE

UNIT CONSTRUCTION
Model: YC-IPF
Construction:
Weather Proof
Base:
6.0" X 1.92" X 8.2#/ft structural steel channel not painted
Base Insulation:
2.0" Polyurethane Foam
Exterior Material:
Walls: 18 GA G-90 Galv Steel or 0.08" Thk Alum
Roof: 20 GA G-90 Galv Steel
Finish: Galvanized or Painted Steel
Wall & Roof Material:
C-Channels 16 GA G-90 Galv at 16" Spacing MAX
Polyurethane Foam
Walls: 3.0" Thk
Roof: 2.0" Thk at side & 4.63" Thk at Peak
22 GA Steel Liner/Interior
Screw Spacing:
See Wall and Roof Details

NOTES
FOR ACTUAL OVERALL CABINET WIDTH DIMENSIONS ADD:
- DOOR HANDLES: 3"
- WATER COIL CONNECTIONS: 5"
- ROOF OVERHANG: 2"
- OPENING FLANGES: 1.5"
- LIGHT SWITCHES, CONVENIENCE OUTLETS: 4"

ACCESS DOOR LIST

#	Width	Height	Window / Options	FST	Mount.
1	24	72	None / Std	SS	Vert.
2	24	72	None / Std	SS	Vert.

SECTION LIST

SECT #	DESCRIPTION
IP	INLET PLENUM
PL-1	PLENUM
DP	DISCHARGE PLENUM
VT-1	SERVICE VESTIBULE/CORRIDOR

MAXIMUM DESIGN LOAD RATING	= + 80.0 PSF
(FOR SIZES SHOWN ABOVE OR SMALLER)	− 80.0 PSF

1. THE AIR HANDLING UNIT ASSEMBLY HAS BEEN TESTED AND ANALYZED FOR DESIGN PRESSURES NOT TO EXCEED THOSE SHOWN IN THE "ALLOWABLE DESIGN LOADS" TABLE FOR THE MAXIMUM SIZED PANEL DIMENSIONS AND FRAMING DISTANCE SPACING INDICATED ON THE DRAWINGS.
2. THE DETAILS AND SPECIFICATIONS SHOWN ON ALL SHEETS INDICATED REPRESENT THE PRODUCTS AND MATERIALS TESTED AND PROPOSED FOR IMPACT, CYCLIC, AND UNIFORM STATIC AIR PRESSURE TESTING IN ACCORDANCE WITH FLORIDA BUILDING CODE PROTOCOLS TAS 201, TAS 202, AND TAS 203 FOR LARGE MISSILE IMPACT. ADDITIONALLY THE PRODUCT WAS TESTED IN ACCORDANCE WITH ASTM E72 FOR COMPONENT SYSTEM RACKING AND ASTM E8 FOR TENSION TESTING OF THE MATERIAL COMPONENTS.
3. ATTACHMENT TO THE ROOF AND THE ROOF CURB TO PREVENT SLIDING AND OVERTURNING OF THE AIR HANDLING UNIT IS NOT PART OF THE SCOPE OF THIS PRODUCT APPROVAL. THESE ELEMENTS SHALL BE REVIEWED BY THE CORRESPONDING BUILDING DEPARTMENT.
4. IT SHALL BE THE RESPONSIBILITY OF THE PERMIT HOLDER TO VERIFY STRUCTURAL INTEGRITY OF THE ROOF/BUILDING STRUCTURE TO SUPPORT ALL LOADS (WIND AND STATIC) SUPERIMPOSED ON THE STRUCTURE BY THE AIR HANDLING UNIT.
5. INTERIOR MOUNTED MECHANICAL EQUIPMENT IS NOT PART OF THIS PRODUCT APPROVAL AND SHALL BE DESIGNED AND INSTALLED BY YORK/JOHNSON CONTROLS IN ACCORDANCE WITH ALL APPLICABLE CODES AND STANDARDS. INTERNAL SUPPORT OF THESE INTERIOR COMPONENTS IS ALSO OUTSIDE THE SCOPE OF THIS PRODUCT APPROVAL.
6. ALL HARDWARE & FASTENERS SHALL BE IN ACCORDANCE WITH THESE DRAWINGS AND SHALL NOT VARY UNLESS SPECIFICALLY STATED ON THE DRAWINGS.
7. ALL METAL THICKNESSES FOR PANELS, STRUCTURAL SUPPORT ELEMENTS AND OTHER COMPONENTS SHALL BE THE MINIMUM SPECIFIED GAGES DIMENSIONS INDICATED ON THE DRAWINGS.
8. ALL SHEET STEEL COMPONENTS SHALL BE MINIMUM 44 KSI SHEET STEEL AT THE SPECIFIED THICKNESS THAT CONFORMS TO ASTM A653, WITH G90U GALVANIZED FINISH.

GENERAL NOTES

1. THIS PRODUCT HAS BEEN DESIGNED AND TESTED TO COMPLY WITH THE REQUIREMENTS OF THE FLORIDA BUILDING CODE (FBC) FIFTH EDITION (2014) INCLUDING HIGH VELOCITY HURRICANE ZONE (HVHZ).
2. STRUCTURAL STEEL SHALL CONFORM TO ASTM DESIGNATION A-36 AND STEEL SHEET SHALL CONFORM TO ASTM DESIGNATION A-653, GALVANIZED WITH A COATING DESIGNATION OF G90. MIN. Fy = 48,380 PSI.
3. ALL CONCRETE SHALL HAVE A 28 DAY COMPRESSIVE STRENGTH OF 3000 PSI.
4. ELECTRICAL AND MECHANICAL DETAILS ARE NOT PART OF THIS APPROVAL.
5. POLYURETHANE SHALL BE RIGID FOAM MIN. DENSITY #2 C.F.
6. MAX. FLAME SPREAD RATING = 0 AS PER ASTM E-84. SMOKE DEVELOPED INDEX = 135. SPONTANEOUS-IGNITION TEMPERATURE = 860°F.
7. ALL STEEL TO BE SHOP PRIMED BEFORE ASSEMBLY.
8. DISSIMILAR MATERIALS IN CONTACT WITH EACH OTHER SHALL BE PROTECTED IN ACCORDANCE WITH S.F.B.C. CHAPTER 30, SECTION 3004.4.
9. MIN. SOIL BEARING CAPACITY = 2500 PSF.
10. A LOAD DURATION INCREASE IS USED IN DESIGN OF ANCHORS INTO WOOD ONLY.
11. MATERIALS INCLUDING BUT NOT LIMITED TO STEEL/METAL SCREWS, THAT COME INTO CONTACT WITH OTHER DISSIMILAR MATERIALS SHALL MEET THE REQUIREMENTS OF THE FLORIDA BLDG. CODE.

PRODUCT REVISED
as complying with the Florida Building Code
Acceptance No 14-0903.01
Expiration Date 12/26/2018
By Miami Dade Product Control

Engr: JAVAD AHMAD
CIVIL
FLA. PE # 70592
C.A.N. 3538
AUG 29 2014

AL-FAROOQ CORPORATION
ENGINEERS & PRODUCT DEVELOPMENT
1235 S.W. 87 AVE
MIAMI, FLORIDA 33174
TEL (305) 264-8100 FAX. (305) 262-6978

COOLER\12-06YIC

SOLUTION AIR HANDLING UNIT

YORK/JOHNSON CONTROLS INC.
1499 EAST PHILADELPHIA STREET
YORK, PA. 17403
TEL. (717) 815-4218 FAX. (717) 815-4198

revisions:

no	date	by	description
A	04.16.13		NO CHANGE THIS SHEET
B	06.21.13		REV. PER RER COMMENTS
C	10.01.13		REV. PER RER COMMENTS
D	08.22.14		UPDATED TO 2014 FBC

date: 12-10-12
scale: 1/8"=1-0"
dr. by: TARIQ
chk. by:

drawing no. 12-06

ALL DIMENSIONS SHOWN ARE IN INCHES.

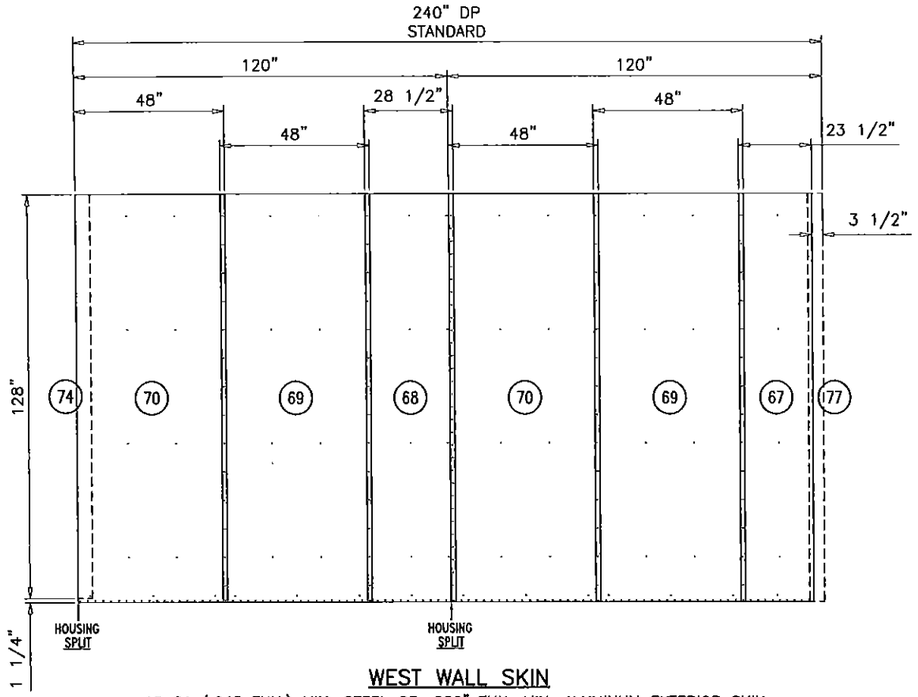

WEST WALL SKIN

18 GA (.045 THK.) MIN. STEEL OR .080" THK. MIN. ALUMINUM EXTERIOR SKIN

GENERAL NOTES:
1. SKINS HELD BACK .125 FROM ALL OPENINGS FRAMED BY 4 CHANNELS.
2. HEADER/FOOTER PIECES AT OPENINGS PLACED UNDER FULL LENGTH PIECES.
3. STANDARD EXTERIOR SKIN OVERLAP IS 1.50".

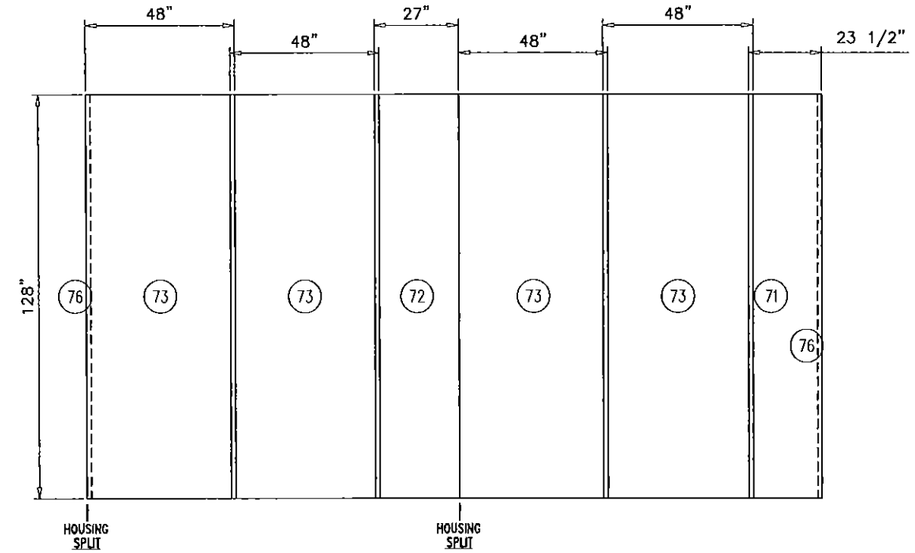

WEST WALL LINERS

22 GA (.028 THK.) MIN. G90 GALV. STEEL SKIN ON THE INTERIOR SIDE

GENERAL NOTES:
1. LINERS HELD BACK .125 FROM ALL OPENINGS FRAMED BY 4 CHANNELS.
2. HEADER/FOOTER PIECES AT OPENINGS PLACED UNDER FULL LENGTH PIECES.
3. STANDARD INTERIOR LINER OVERLAP IS 1.50".

LEVEL	ITEM	PART NO. *=Stocked	TOTAL QTY.	SORT FIELD	DESCRIPTION	SHEET/REF.	QTY. ONE
1	66		1	WALL ASSEMBLY	WEST WALL:240.00 X 128.00		1
1	74		1	C:CORNER-CAP3	9.44W X 128.00L X AL,3105H14,.040		1
1	77		1	C:CORNER-CAP3	9.44W X 129.25L X AL,3105H14,.040		1
1	76		2	C:CORNER-LINER	2.65W X 127.94L X SHEET,GLV,G90,16GA		2
1	67		1	C:EXT-SKIN-0	23.50W X 129.25L X AL,3105H14,.040		1
1	68		1	C:EXT-SKIN-0	28.50W X 129.25L X AL,3105H14,.040		1
1	69		2	C:EXT-SKIN-0	48.00W X 129.25L X AL,3105H14,.040		2
1	70		2	C:EXT-SKIN-0	48.00W X 129.25L X AL,3105H14,.040		2
1	71		1	C:INT-LINER-0	23.47W X 127.94L X SHEET,GLV,G90,22GA		1
1	72		1	C:INT-LINER-0	26.97W X 127.94L X SHEET,GLV,G90,22GA		1
1	73		4	C:INT-LINER-0	48.00W X 127.94L X SHEET,GLV,G90,22GA		4
1	79		1	C:SC1.41X3.13-0	5.75W X 116.50L X CHANNEL,RF,16GA,GLV,5.67W_F		1
1	80		1	C:SC1.41X3.13-0	5.75W X 116.50L X CHANNEL,RF,16GA,GLV,5.67W_F		1
1	81		1	C:SC1.41X3.13-0	5.75W X 120.00L X CHANNEL,RF,16GA,GLV,5.67W_F		1
1	82		1	C:SC1.41X3.13-0	5.75W X 120.00L X CHANNEL,RF,16GA,GLV,5.67W_F		1
1	83		18	C:SC1.50X2.94-0	5.74W X 127.75L X CHANNEL,RF,16GA,GLV,5.67W_F		18

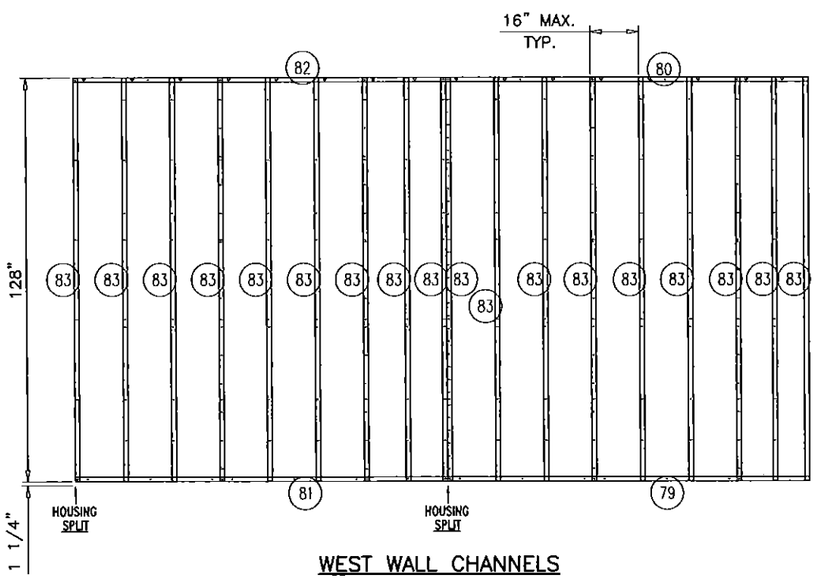

WEST WALL CHANNELS

PRODUCT REVISED
as complying with the Florida
Building Code
Acceptance No 14-0903.01
Expiration Date 12/26/2018
By
Miami Dade Product Control

Engr: JAVAD AHMAD
CIVIL
FLA. PE # 70592
C.A.N. 3538

AUG 29 2014

AL-FAROOQ CORPORATION
ENGINEERS & PRODUCT DEVELOPMENT
1235 S.W. 87 AVE
MIAMI, FLORIDA 33174
TEL. (305) 264-8100 FAX. (305) 262-6978
COOLER\12-06YIC

SOLUTION AIR HANDLING UNIT

YORK/JOHNSON CONTROLS INC.
1499 EAST PHILADELPHIA STREET
YORK, PA. 17403
TEL. (717) 815-4218 FAX. (717) 815-4198

revisions:

no	date	by	description
A	04.16.13		NO CHANGE THIS SHEET
B	06.21.13		REV. PER RER COMMENTS
C	10.01.13		REV. PER RER COMMENTS
D	08.22.14		NO CHANGE THIS SHEET

date: 12-10-12
scale: 1/4"=1-0"
dr. by: TARIQ
chk. by:

drawing no.
12-06

ALL DIMENSIONS SHOWN ARE IN INCHES.

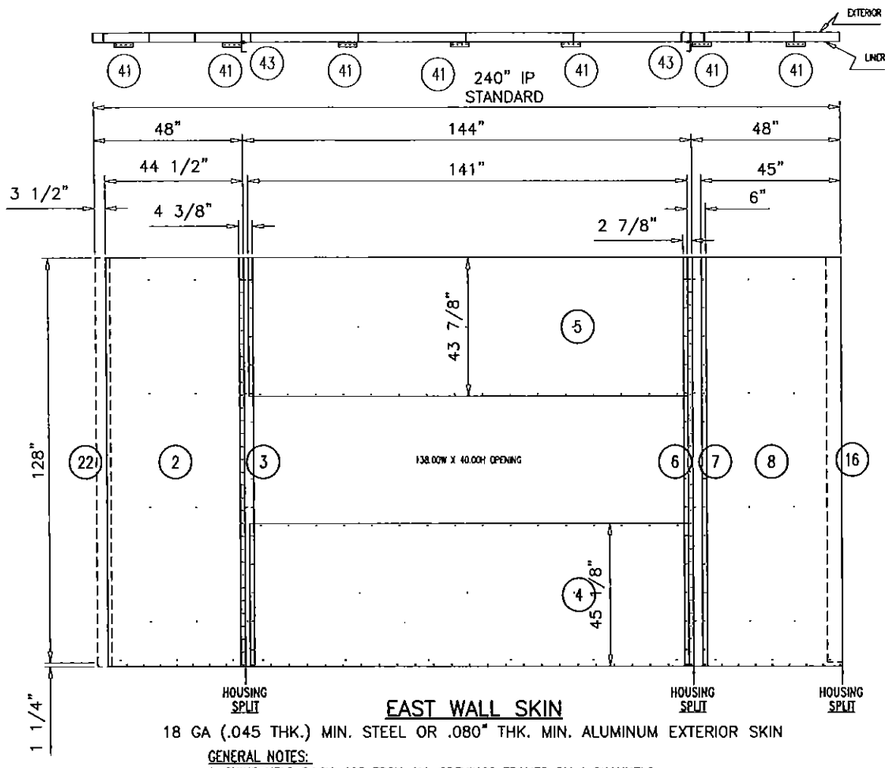

EAST WALL SKIN

18 GA (.045 THK.) MIN. STEEL OR .080" THK. MIN. ALUMINUM EXTERIOR SKIN

GENERAL NOTES:
1. SKINS HELD BACK .125 FROM ALL OPENINGS FRAMED BY 4 CHANNELS.
2. HEADER/FOOTER PIECES AT OPENINGS PLACED UNDER FULL LENGTH PIECES.
3. STANDARD EXTERIOR SKIN OVERLAP IS 1.50".

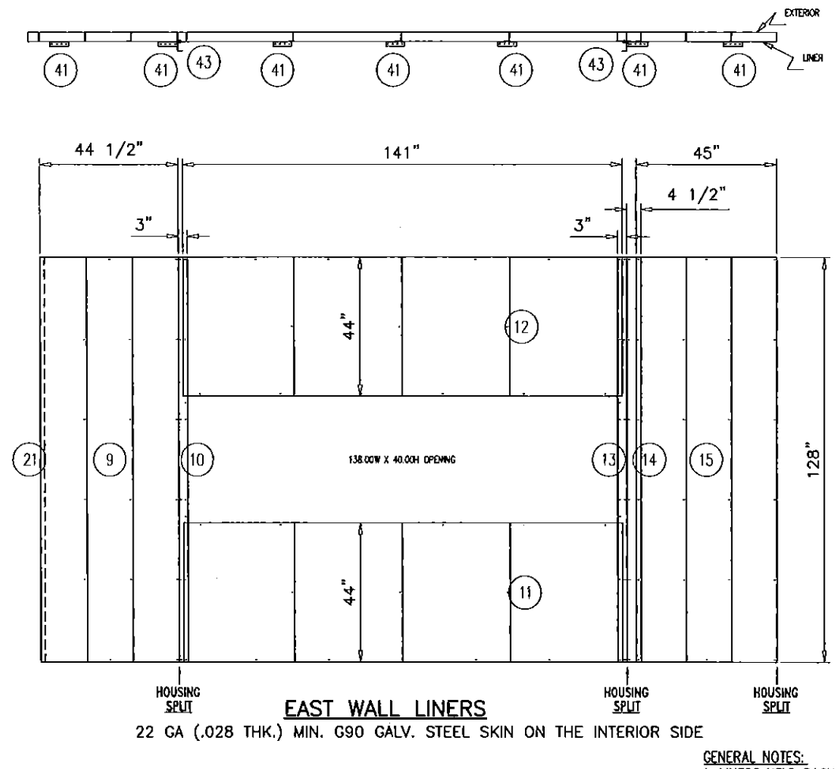

EAST WALL LINERS

22 GA (.028 THK.) MIN. G90 GALV. STEEL SKIN ON THE INTERIOR SIDE

GENERAL NOTES:
1. LINERS HELD BACK .125 FROM ALL OPENINGS FRAMED BY 4 CHANNELS.
2. HEADER/FOOTER PIECES AT OPENINGS PLACED UNDER FULL LENGTH PIECES.
3. STANDARD INTERIOR LINER OVERLAP IS 1.50".

(40) WALL TO FLOOR TIE DOWN

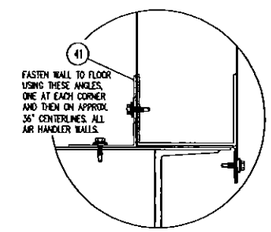

SEE SHEET 12 FOR WALL OPNG. SIZING AND ASSEMBLY GUIDELINES
SEE SHEET 17 FOR WEATHER HOOD SIZING, CONSTRUCTION AND CONFIGURATIONS GUIDELINES

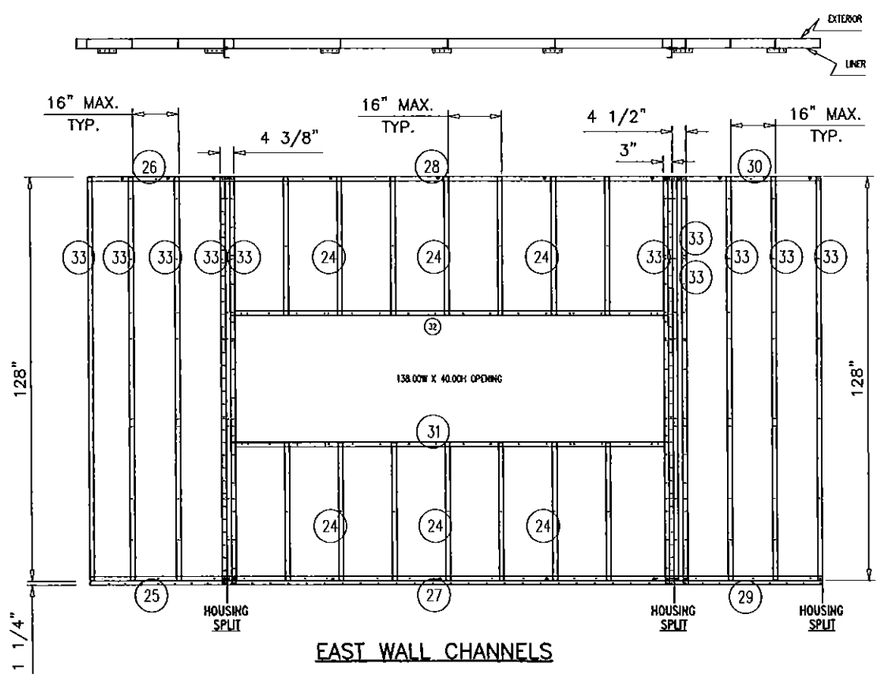

EAST WALL CHANNELS

LEVEL	ITEM	* PART NO. *=Stocked	TOTAL QTY.	SORT FIELD	DESCRIPTION	SHEET/REF.	QTY. ONE
	1		1	WALL ASSEMBLY	EAST WALL: 240.00 X 128.00		1
	16		1	C:CORNER-CAP3	9.40W X 128.00L X SHEET,GLV,G90,16GA		1
	22		1	C:CORNER-CAP3	9.40W X 129.25L X SHEET,GLV,G90,16GA		1
	21		2	C:CORNER-LINER	2.65W X 127.94L X SHEET,GLV,G90,16GA		2
	2		1	C:EXT-SKIN-0	44.50W X 129.25L X SHEET,GLV,G90,18GA		1
	3		1	C:EXT-SKIN-0	4.38W X 129.25L X SHEET,GLV,G90,18GA		1
	4		1	C:EXT-SKIN-0	141.00W X 45.13L X SHEET,GLV,G90,18GA		1
	5		1	C:EXT-SKIN-0	141.00W X 43.88L X SHEET,GLV,G90,18GA		1
	6		1	C:EXT-SKIN-0	2.88W X 129.25L X SHEET,GLV,G90,18GA		1
	7		1	C:EXT-SKIN-0	6.00W X 129.25L X SHEET,GLV,G90,18GA		1
	8		1	C:EXT-SKIN-0	45.00W X 129.25L X SHEET,GLV,G90,18GA		1
	43		2	C:F1.50-0	6.64W X 130.64L X SHEET,GLV,G90,12GA		2
	9		1	C:INT-LINER-0	44.44W X 127.94L X SHEET,GLV,G90,22GA		1
	10		1	C:INT-LINER-0	2.94W X 127.94L X SHEET,GLV,G90,22GA		1
	11		1	C:INT-LINER-0	141.00W X 43.94L X SHEET,GLV,G90,22GA		1
	12		1	C:INT-LINER-0	141.00W X 43.94L X SHEET,GLV,G90,22GA		1
	13		1	C:INT-LINER-0	2.94W X 127.94L X SHEET,GLV,G90,22GA		1
	14		1	C:INT-LINER-0	4.44W X 127.94L X SHEET,GLV,G90,22GA		1
	15		1	C:INT-LINER-0	44.97W X 127.94L X SHEET,GLV,G90,22GA		1
	25		1	C:SC1.41X3.13-0	5.75W X 44.50L X CHANNEL,RF,16GA,GLV,5.67W_FL		1
	26		1	C:SC1.41X3.13-0	5.75W X 44.50L X CHANNEL,RF,16GA,GLV,5.67W_FL		1
	27		1	C:SC1.41X3.13-0	5.75W X 144.00L X CHANNEL,RF,16GA,GLV,5.67W_F		1
	28		1	C:SC1.41X3.13-0	5.75W X 144.00L X CHANNEL,RF,16GA,GLV,5.67W_F		1
	29		1	C:SC1.41X3.13-0	5.75W X 48.00L X CHANNEL,RF,16GA,GLV,5.67W_FL		1
	30		1	C:SC1.41X3.13-0	5.75W X 48.00L X CHANNEL,RF,16GA,GLV,5.67W_FL		1
	42		2	C:SC1.50X2.94	5.58W X 127.75L X SHEET,GLV,G90,12GA		2
	24		6	C:SC1.50X2.94-0	5.74W X 43.75L X CHANNEL,RF,16GA,GLV,5.67W_FL		6
	31		1	C:SC1.50X2.94-0	5.74W X 138.00L X CHANNEL,RF,16GA,GLV,5.67W_F		1
	32		1	C:SC1.50X2.94-0	5.74W X 138.00L X CHANNEL,RF,16GA,GLV,5.67W_F		1
	33		11	C:SC1.50X2.94-0	5.74W X 127.75L X CHANNEL,RF,16GA,GLV,5.67W_F		11
	18		1	SUPPORT ASSY	PERMANENT ROOF SUPPORT ASSY	5.01	1
	19		1	C:ROOF-COLUMN	12.03W X 127.75L X SHEET,GLV,G90,12GA		1
	20	* 091 20006 001	2	END CAP	CAP,PERM_POST,YC,12GA,G90	YC86-010	2
	40		1	TIE DOWNS	WALL TO FLOOR TIE DOWN PARTS	5.01	1
	41		30	TIE DOWN PLATES	2.82 X 6.00 X SHEET,GLV,G90,12GA		30
	42		1	BRACING	DISCHARGE/INLET OPENINGS	5.01	1
	43		1	BRACING SUPPORT	6.64 X 130.64 X SHEET,GLV,G90,12GA		30

PRODUCT REVISED
as complying with the Florida
Building Code
Acceptance No 14-0903.01
Expiration Date 12/26/2018
By Helen A. Martin
Miami Dade Product Control

Engr: JAVAD AHMAD
CIVIL
FLA. PE # 70592
C.A.N. 3538
AUG 29 2014

AL-FAROOQ CORPORATION
ENGINEERS & PRODUCT DEVELOPMENT
1235 S.W. 87 AVE
MIAMI, FLORIDA 33174
TEL. (305) 264-8100 FAX. (305) 262-6978

COOLER\12-06YIC

SOLUTION AIR HANDLING UNIT

YORK/JOHNSON CONTROLS INC.
1499 EAST PHILADELPHIA STREET
YORK, PA. 17403
TEL. (717) 815-4218 FAX. (717) 815-4198

revisions:

no	date	by	description
A	04.16.13		NO CHANGE THIS SHEET
B	06.21.13		REV. PER RER COMMENTS
C	10.01.13		REV. PER RER COMMENTS
D	08.22.14		NO CHANGE THIS SHEET

date: 12-10-12
scale: 1/4"=1-0"
dr. by: TARIQ
chk. by:

drawing no.
12-06

ALL DIMENSIONS SHOWN ARE IN INCHES.

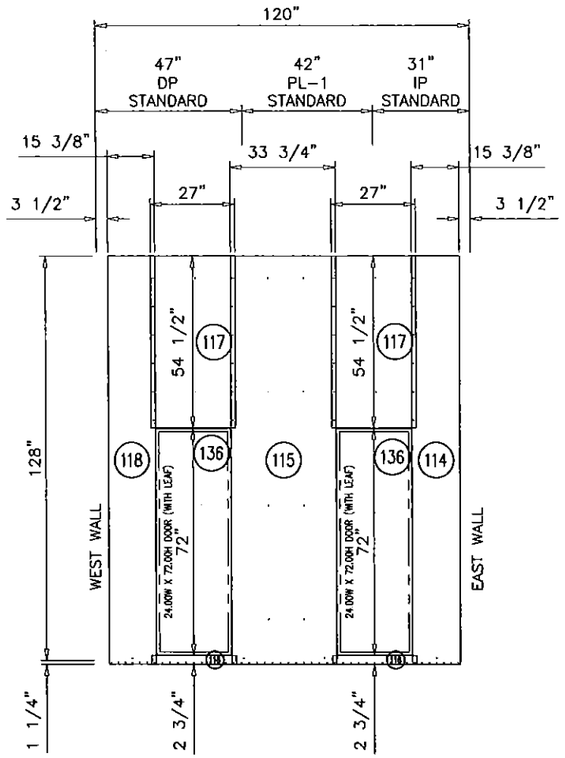

NORTH WALL SKIN

18 GA (.045 THK.) MIN. STEEL OR .080" THK. MIN. ALUMINUM EXTERIOR SKIN

GENERAL NOTES:
1. SKINS HELD BACK .125 FROM ALL OPENINGS FRAMED BY 4 CHANNELS.
2. HEADER/FOOTER PIECES AT OPENINGS PLACED UNDER FULL LENGTH PIECES.
3. STANDARD EXTERIOR SKIN OVERLAP IS 1.50".

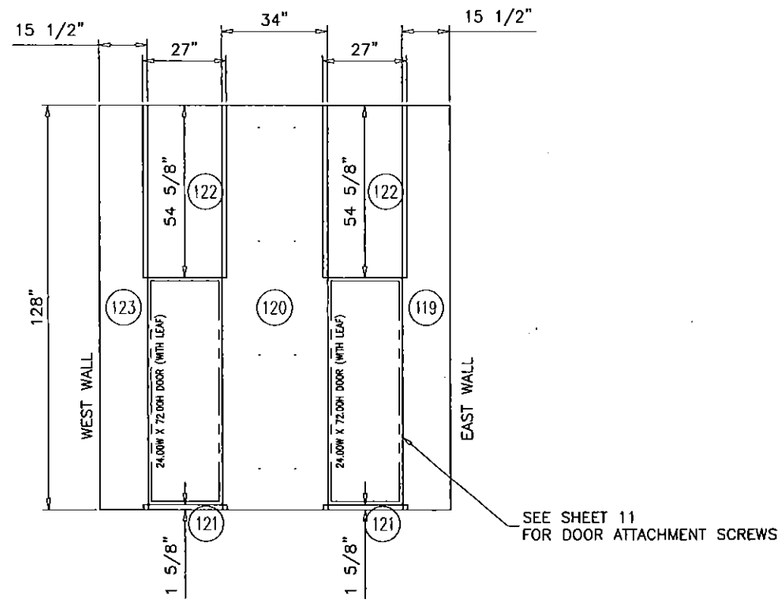

NORTH WALL LINERS

22 GA (.028 THK.) MIN. G90 GALV. STEEL SKIN ON THE INTERIOR SIDE

GENERAL NOTES:
1. LINERS HELD BACK .125 FROM ALL OPENINGS FRAMED BY 4 CHANNELS.
2. HEADER/FOOTER PIECES AT OPENINGS PLACED UNDER FULL LENGTH PIECES.
3. STANDARD INTERIOR LINER OVERLAP IS 1.50".

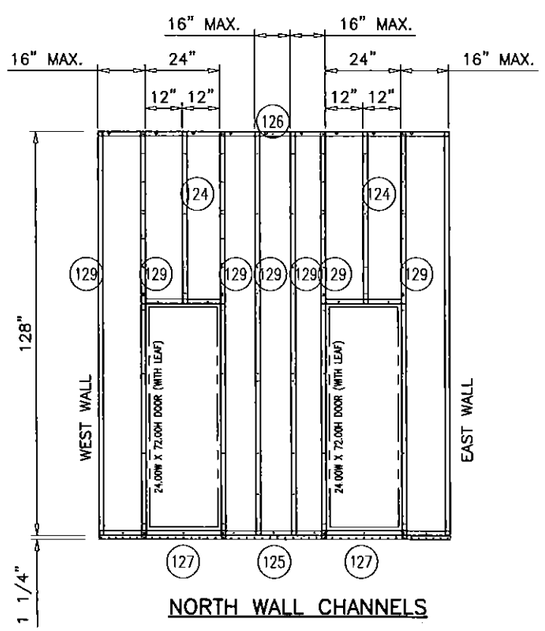

NORTH WALL CHANNELS

LEVEL	ITEM	PART NO. *=Stocked	TOTAL QTY.	SORT FIELD	DESCRIPTION | SHEET/REF.	QTY. ONE
	113		1	WALL ASSEMBLY	NORTH WALL:120.00 X 128.00	1
	114		1	C:EXT-SKIN-0	15.38W X 129.25L X AL,3105H14,.040	1
	115		1	C:EXT-SKIN-0	33.75W X 129.25L X AL,3105H14,.040	1
	116		2	C:EXT-SKIN-0	27.00W X 2.75L X AL,3105H14,.040	2
	117		2	C:EXT-SKIN-0	27.00W X 54.50L X AL,3105H14,.040	2
	118		1	C:EXT-SKIN-0	15.38W X 129.25L X AL,3105H14,.040	1
	119		1	C:INT-LINER-0	15.44W X 127.94L X SHEET,GLV,G90,22GA	1
	120		1	C:INT-LINER-0	33.94W X 127.94L X SHEET,GLV,G90,22GA	1
	121		2	C:INT-LINER-0	27.00W X 1.56L X SHEET,GLV,G90,22GA	2
	122		2	C:INT-LINER-0	27.00W X 54.56L X SHEET,GLV,G90,22GA	2
	123		1	C:INT-LINER-0	15.44W X 127.94L X SHEET,GLV,G90,22GA	1
	136		2	C:RAIN-LIP	2.57W X 25.75L X AL,3105H14,.040	2
	125		1	C:SC1.41X3.13-0	5.75W X 113.00L X CHANNEL,RF,16GA,GLV,5.67W_F	1
	126		1	C:SC1.41X3.13-0	5.75W X 113.00L X CHANNEL,RF,16GA,GLV,5.67W_F	1
	124		2	C:SC1.50X2.94-0	5.74W X 54.38L X CHANNEL,RF,16GA,GLV,5.67W_FL	2
	127		2	C:SC1.50X2.94-0	5.74W X 24.00L X CHANNEL,RF,16GA,GLV,5.67W_FL	2
	128		2	C:SC1.50X2.94-0	5.74W X 24.00L X CHANNEL,RF,16GA,GLV,5.67W_FL	2
	129		8	C:SC1.50X2.94-0	5.74W X 127.75L X CHANNEL,RF,16GA,GLV,5.67W_F	8

PRODUCT REVISED
as complying with the Florida
Building Code
Acceptance No 14-0903.01
Expiration Date 12/26/2018
By [signature]
Miami Dade Product Control

Engr: JAVAD AHMAD
CIVIL
FLA. PE # 70592
C.A.N. 3538
AUG 29 2014

AL-FAROOQ CORPORATION
ENGINEERS & PRODUCT DEVELOPMENT
1235 S.W. 87 AVE
MIAMI, FLORIDA 33174
TEL (305) 264-8100 FAX. (305) 262-6978

COOLER\12-06YIC

SOLUTION AIR HANDLING UNIT

YORK/JOHNSON CONTROLS INC.
1499 EAST PHILADELPHIA STREET
YORK, PA. 17403
TEL. (717) 815-4198 FAX. (717) 815-4218

revisions:

no	date	by	description
A	04.16.13		NO CHANGE THIS SHEET
B	06.21.13		REV. PER RER COMMENTS
C	10.01.13		REV. PER RER COMMENTS
D	08.22.14		NO CHANGE THIS SHEET

date: 12-10-12
scale: 1/4"=1-0"
dr. by: TARIQ
chk. by:

drawing no.
12-06

ALL DIMENSIONS SHOWN ARE IN INCHES.

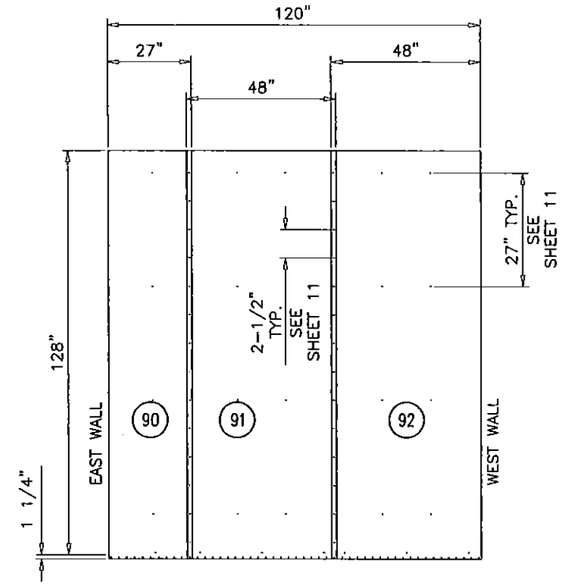

SOUTH WALL SKIN

18 GA (.045 THK.) MIN. STEEL OR .080" THK. MIN. ALUMINUM EXTERIOR SKIN

GENERAL NOTES:
1. SKINS HELD BACK .125 FROM ALL OPENINGS FRAMED BY 4 CHANNELS.
2. HEADER/FOOTER PIECES AT OPENINGS PLACED UNDER FULL LENGTH PIECES.
3. STANDARD EXTERIOR SKIN OVERLAP IS 1.50".

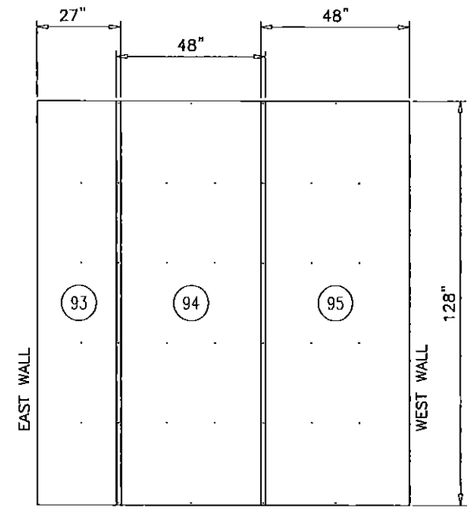

SOUTH WALL LINERS

22 GA (.028 THK.) MIN. G90 GALV. STEEL SKIN ON THE INTERIOR SIDE

GENERAL NOTES:
1. LINERS HELD BACK .125 FROM ALL OPENINGS FRAMED BY 4 CHANNELS.
2. HEADER/FOOTER PIECES AT OPENINGS PLACED UNDER FULL LENGTH PIECES.
3. STANDARD INTERIOR LINER OVERLAP IS 1.50".

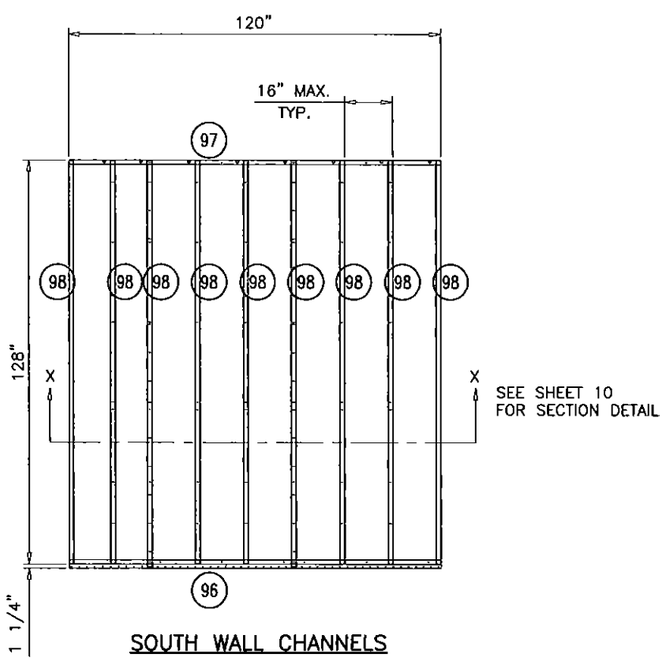

SOUTH WALL CHANNELS

LEVEL	ITEM	PART NO. *=Stocked	TOTAL QTY.	SORT FIELD	DESCRIPTION	SHEET/REF.	QTY. ONE
	89		1	WALL ASSEMBLY	SOUTH WALL:120.00 X 128.00		1
	103	391 20002 002	29CF	OCR #574	FOAM MIX, PART A,B, & FREON		29CF
	90		1	C:EXT-SKIN-0	27.00W X 129.25L X SHEET,GLV,G90,18GA		1
	91		1	C:EXT-SKIN-0	48.00W X 129.25L X SHEET,GLV,G90,18GA		1
	92		1	C:EXT-SKIN-0	48.00W X 129.25L X SHEET,GLV,G90,18GA		1
	93		1	C:INT-LINER-0	26.94W X 127.94L X SHEET,GLV,G90,22GA		1
	94		1	C:INT-LINER-0	47.97W X 127.94L X SHEET,GLV,G90,22GA		1
	95		1	C:INT-LINER-0	47.97W X 127.94L X SHEET,GLV,G90,22GA		1
	96		1	C:SC1.41X3.13-0	5.75W X 120.00L X CHANNEL,RF,16GA,GLV,5.67W_F		1
	97		1	C:SC1.41X3.13-0	5.75W X 120.00L X CHANNEL,RF,16GA,GLV,5.67W_F		1
	98		9	C:SC1.50X2.94-0	5.74W X 127.75L X CHANNEL,RF,16GA,GLV,5.67W_F		9

PRODUCT REVISED
as complying with the Florida
Building Code
Acceptance No 14-0903.01
Expiration Date 12/26/2018
By
Miami Dade Product Control

Engr: JAVAD AHMAD
CIVIL
FLA. PE # 70392
C.A.N. 3538
AUG 29 2014

AL-FAROOQ CORPORATION
ENGINEERS & PRODUCT DEVELOPMENT
1235 S.W. 87 AVE
MIAMI, FLORIDA 33174
TEL (305) 264-8100 FAX. (305) 262-6978
COOLER\12-06YIC

SOLUTION AIR HANDLING UNIT

YORK/JOHNSON CONTROLS INC.
1499 EAST PHILADELPHIA STREET
YORK, PA. 17403
TEL. (717) 815-4218 FAX. (717) 815-4198

revisions:

no	date	by	description
A	04.16.13		NO CHANGE THIS SHEET
B	06.21.13		REV. PER RER COMMENTS
C	10.01.13		REV. PER RER COMMENTS
D	08.22.14		NO CHANGE THIS SHEET

date: 12-10-12
scale: 1/4"=1-0"
dr. by: TARIQ
chk. by:

drawing no.
12-06

ALL DIMENSIONS SHOWN ARE IN INCHES.

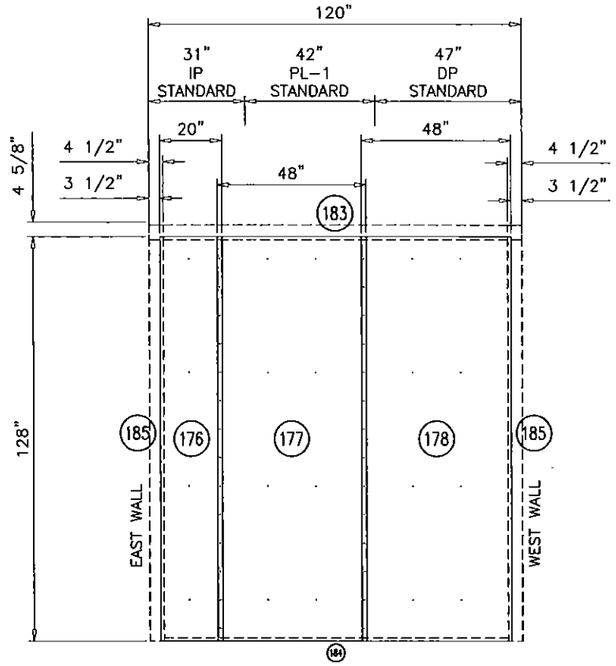

VESTIBULE/CORRIDOR WALL SKIN

18 GA (.045 THK.) MIN. STEEL OR .080" THK. MIN. ALUMINUM EXTERIOR SKIN

GENERAL NOTES:
1. SKINS HELD BACK .125 FROM ALL OPENINGS FRAMED BY 4 CHANNELS.
2. HEADER/FOOTER PIECES AT OPENINGS PLACED UNDER FULL LENGTH PIECES.
3. STANDARD EXTERIOR SKIN OVERLAP IS 1.50".

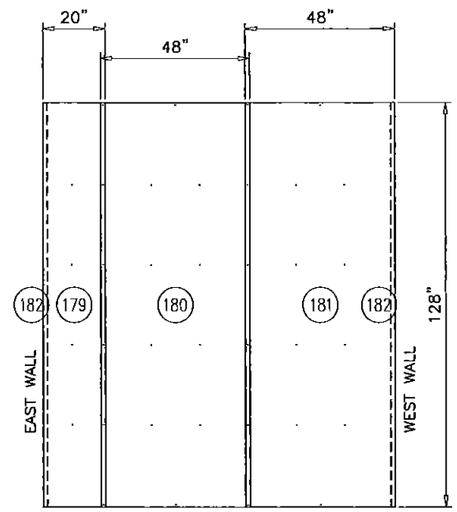

VESTIBULE/CORRIDOR WALL LINERS

22 GA (.028 THK.) MIN. G90 GALV. STEEL SKIN ON THE INTERIOR SIDE

GENERAL NOTES:
1. LINERS HELD BACK .125 FROM ALL OPENINGS FRAMED BY 4 CHANNELS.
2. HEADER/FOOTER PIECES AT OPENINGS PLACED UNDER FULL LENGTH PIECES.
3. STANDARD INTERIOR LINER OVERLAP IS 1.50".

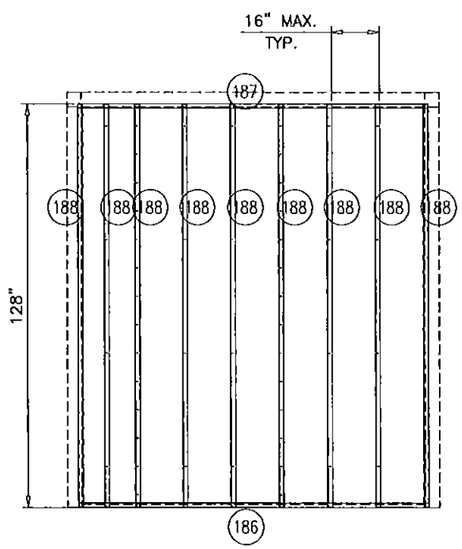

VESTIBULE/CORRIDOR WALL CHANNELS

LEVEL	ITEM	PART NO. *=Stocked	TOTAL QTY.	SORT FIELD	DESCRIPTION	SHEET/REF.	QTY. ONE
	175		1	WALL ASSEMBLY	CORRIDOR WALL:120.00 X 128.00		1
	184		1	C:ATTACH-ANGLE	1.94W X 111.00L X SHEET,GLV,G90,20GA		1
	182		2	C:CORNER-LINER	2.65W X 127.94L X SHEET,GLV,G90,16GA		2
	176		1	C:EXT-SKIN-0	20.00W X 128.00L X SHEET,GLV,G90,20GA		1
	177		1	C:EXT-SKIN-0	48.00W X 128.00L X SHEET,GLV,G90,20GA		1
	178		1	C:EXT-SKIN-0	48.00W X 128.00L X SHEET,GLV,G90,20GA		1
	179		1	C:INT-LINER-0	19.94W X 127.94L X SHEET,GLV,G90,22GA		1
	180		1	C:INT-LINER-0	47.97W X 127.94L X SHEET,GLV,G90,22GA		1
	181		1	C:INT-LINER-0	47.97W X 127.94L X SHEET,GLV,G90,22GA		1
	186		1	C:SC1.41X3.13-0	5.75W X 113.00L X CHANNEL,RF,16GA,GLV,5.67W_F		1
	187		1	C:SC1.41X3.13-0	5.75W X 113.00L X CHANNEL,RF,16GA,GLV,5.67W_F		1
	188		9	C:SC1.50X2.94-0	5.74W X 127.75L X CHANNEL,RF,16GA,GLV,5.67W_F		9
	185		2	C:SEAL-ANGLE	5.94W X 131.63L X SHEET,GLV,G90,20GA		2
	183		1	C:SEAL-ANGLE-2	6.57W X 120.00L X SHEET,GLV,G90,20GA		1

Engr: JAVAD AHMAD
CIVIL
FLA. PE # 70592
C.A.N. 3538
AUG 29 2014

PRODUCT REVISED
as complying with the Florida
Building Code
Acceptance No 14-0903.01
Expiration Date 12/26/2018
By
Miami Dade Product Control

AL-FAROOQ CORPORATION
ENGINEERS & PRODUCT DEVELOPMENT
1235 S.W. 87 AVE
MIAMI, FLORIDA 33174
TEL (305) 264-8100 FAX. (305) 262-6978

COOLER\12-06YIC

SOLUTION AIR HANDLING UNIT

YORK/JOHNSON CONTROLS INC.
1499 EAST PHILADELPHIA STREET
YORK, PA. 17403
TEL. (717) 815-4218 FAX. (717) 815-4198

revisions:

no	date	by	description
A	04.16.13		NO CHANGE THIS SHEET
B	06.21.13		REV. PER RER COMMENTS
C	10.01.13		REV. PER RER COMMENTS
D	08.22.14		NO CHANGE THIS SHEET

date: 12-10-12
scale: 1/4"=1-0"
dr. by: TARIQ
chk. by:

drawing no.
12-06

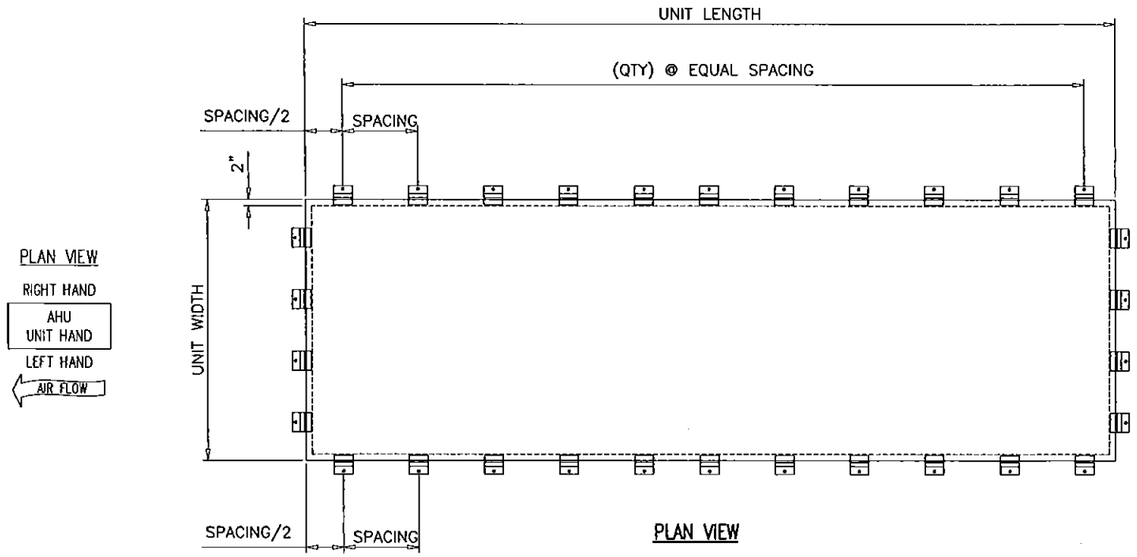

BASE ANCHOR LAYOUT

NOTE:
ANCHOR SPACING WILL VARY BASED ON UNIT LENGTH
BUT SHALL NOT EXCEED 16" O.C.

UNIT CONSTRUCTION
Base: 6" X 1.92" X 8.2#/ft structural steel channel 8" X 2.26" X 11.5#/ft structural steel channel 10" X 2.60" X 15.3#/ft structural steel channel 12" X 2.94" X 20.7#/ft structural steel channel painted w/ 6 to 8 mil DFT Champagne Epoxy. Base Insulation: 2" Polyurethane Foam Base Skin: 16 Ga Minimum.

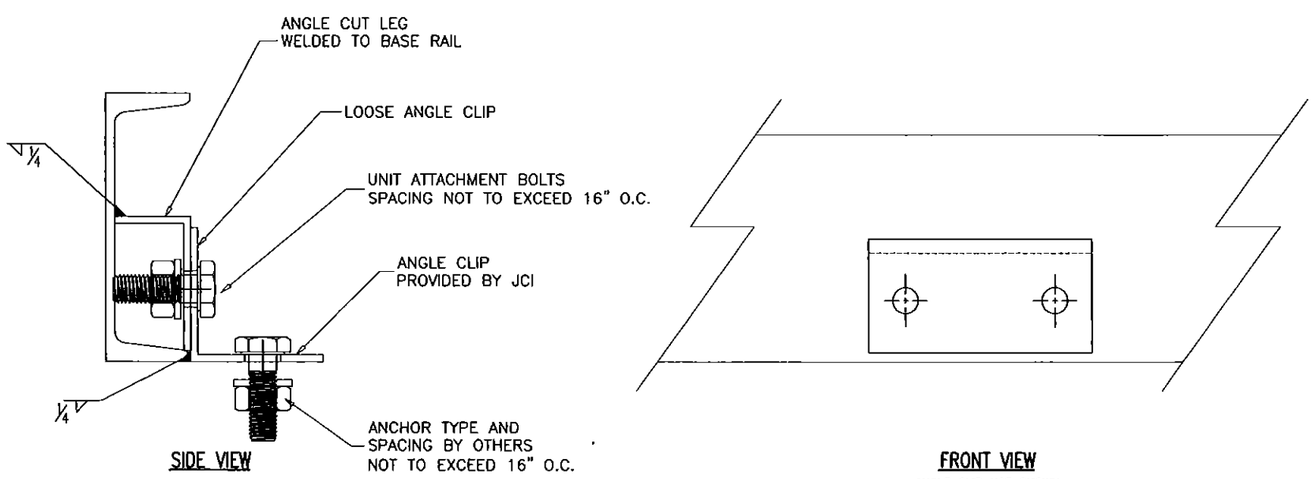

BASE ANCHOR CLIPS DETAIL

Notes:
1. Unit base frame is bolted C-channel structural steel.

2. Air Handling Unit can vary in size however, spacing of the structural support elements such as the base frame,roof/wall panels, hardware spacing, hardware sizes, shall not exceed the dimensions or material gages indicated.

3. It shall be the responsibility of the permit holder to verify the strucutal integrity of the existing structure to support the loads superimposed by the Air Handling Unit.

4. Attachment to the concrete/steel structure to prevent sliding and overturning of the air handling unit is not part of the scope of this product approval. These elements shall be reviewed by the corresponding building department.

Engr: JAVAD AHMAD
CIVIL
FLA. PE # 70592
C.A.N. 3538
AUG 29 2014

PRODUCT REVISED
as complying with the Florida
Building Code
Acceptance No 14-0903.01
Expiration Date 12/26/2018
By
Miami Dade Product Control

AL-FAROOQ CORPORATION
ENGINEERS & PRODUCT DEVELOPMENT
1235 S.W. 87 AVE
MIAMI, FLORIDA 33174
TEL. (305) 264-8100 FAX. (305) 262-6978

COOLER\12-06YIC

SOLUTION AIR HANDLING UNIT

YORK/JOHNSON CONTROLS INC.
1499 EAST PHILADELPHIA STREET
YORK, PA. 17403
TEL. (717) 815-4218 FAX. (717) 815-4198

revisions:

no	date	by	description
A	04.16.13		NO CHANGE THIS SHEET
B	06.21.13		REV. PER RER COMMENTS
C	10.01.13		NO CHANGE THIS SHEET
D	08.22.14		NO CHANGE THIS SHEET

date: 12-10-12
scale: 1/4"=1-0"
dr. by: TARIQ
chk. by:

drawing no.
12-06

INTERIOR BASE CHANNELS

-INTERIOR BASE CHANNELS WILL BE FABRICATED FROM 10 GAUGE HR MATERIAL. WHEN THE MAXIMUM SPAN FOR FORMED CHANNEL IS EXCEEDED, STRUCTURAL CHANNEL WILL BE USED.)

-IN GENERAL, THE INTERIOR BASE CHANNELS WILL SPAN THE SHORTEST DIRECTION (SEE EXAMPLES BELOW). SOME EXCEPTIONS TO THIS RULE ARE COIL DRAIN PANS, RECESSED FLOORS AND Evap-Pak SUMP SUPPORTS.

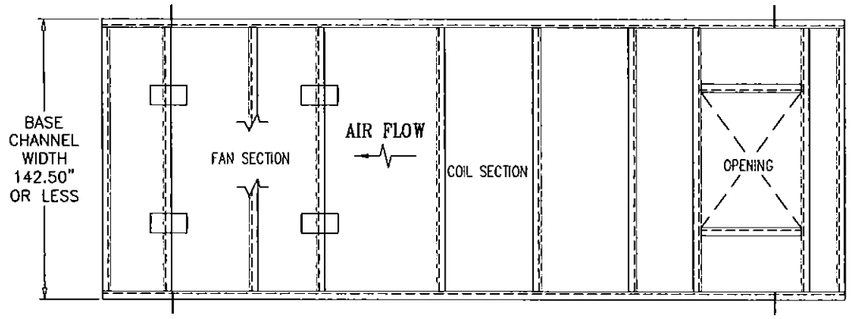

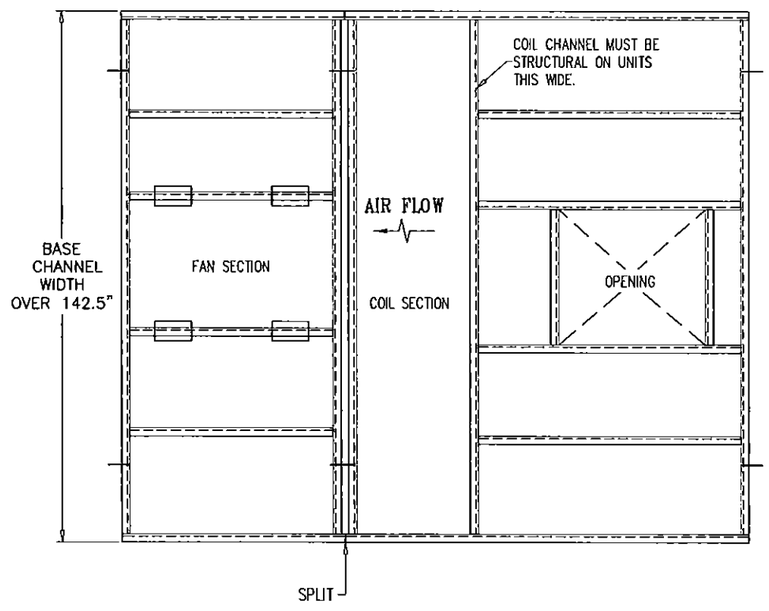

TYPICAL BASE CHANNEL LAYOUT

BASE SKIN LAYOUT

-IN GENERAL THE BASE SKINS WILL BE SIZED WITH THEIR LONGEST DIMENSION PARALLEL TO THE SKIN SUPPORT CHANNEL.

-ALL BASE SKIN SEAMS MUST BE SUPPORTED BY EITHER A FORMED OR STRUCTURAL CHANNEL.

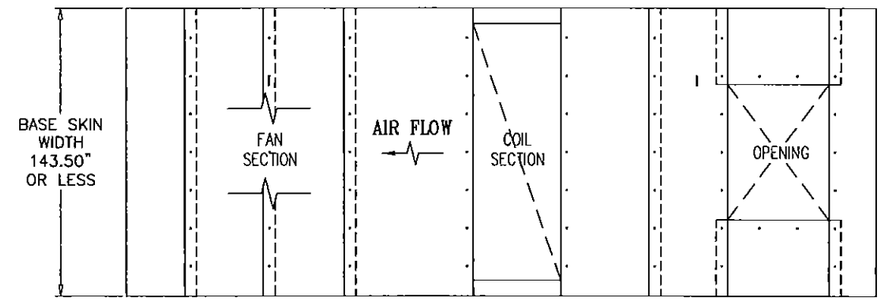

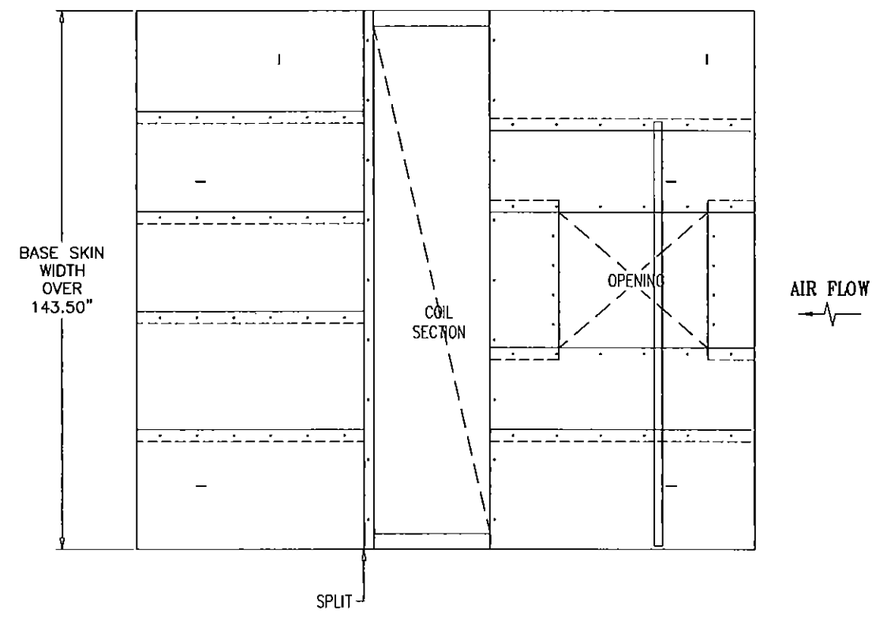

TYPICAL BASE SKIN LAYOUT

PRODUCT REVISED
as complying with the Florida
Building Code
Acceptance No 14-0903.01
Expiration Date 12/26/2018
By
Mimmi Dadi Product Control

Engr: JAVAD AHMAD
CIVIL
FLA. PE # 70592
C.A.N. 3538
AUG 29 2014

ALL DIMENSIONS SHOWN ARE IN INCHES.

AL-FAROOQ CORPORATION
ENGINEERS & PRODUCT DEVELOPMENT
1235 S.W. 87 AVE
MIAMI, FLORIDA 33174
TEL. (305) 264-8100 FAX. (305) 262-6978

COOLER\12-06YIC

SOLUTION AIR HANDLING UNIT

YORK/JOHNSON CONTROLS INC.
1499 EAST PHILADELPHIA STREET
YORK, PA. 17403
TEL. (717) 815-4218 FAX. (717) 815-4198

revisions:

no	date	by	description
A	04.16.13		NO CHANGE THIS SHEET
B	06.21.13		SHEET DELETED
C	10.01.13		SHEET ADDED
D	08.22.14		NO CHANGE THIS SHEET

date: 12-10-12
scale: -
dr. by: TARIQ
chk. by:

drawing no.
12-06

3 X 3 X 8 GA – 6" LENGTH ANGLE CLIP

ANGLE CLIP MATERIAL, 8 GA. HOT ROLLED, FORMED.

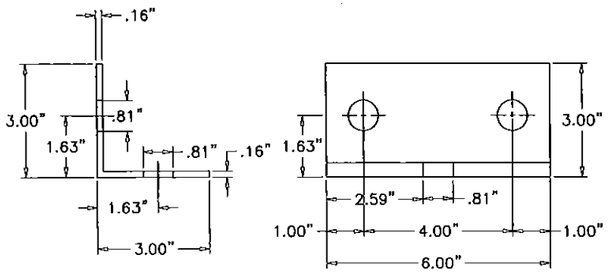

3 X 3 X 8 GA – 6" LENGTH ANGLE CUT LEG Ⓐ Ⓑ Ⓒ Ⓓ

ANGLE CLIP MATERIAL, 8 GA. HOT ROLLED, FORMED.

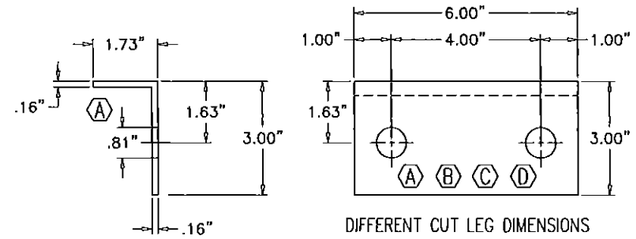

DIFFERENT CUT LEG DIMENSIONS

HARDWARE REQUIRED FOR ANCHOR CLIP/EACH

(2) SCREW HC. GR5. PLTD. .75-10_2 021 30470 090
(2) NUT HX PLTD GR5 .75-10 021 30408 009
(2) WASHER LOCK SPLIT PLTD .75 021 30437 012
(1) SAE GRADE 8 BOLTS PER ANCHORAGE LAYOUT DWG

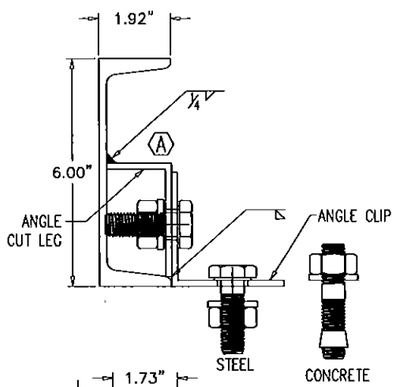

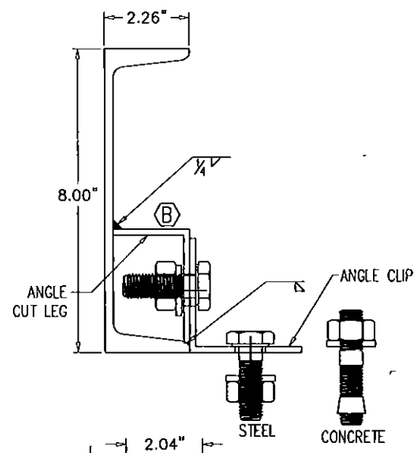

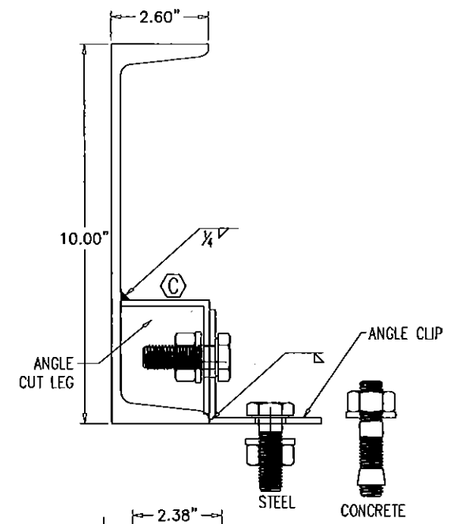

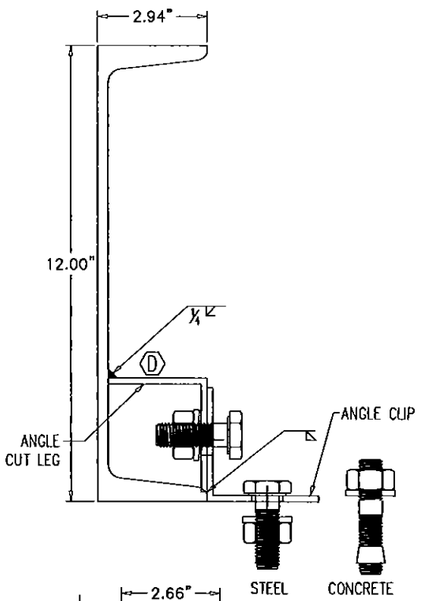

3 X 3 X 8 GA – 6" LENGTH ANGLE CUT LEG

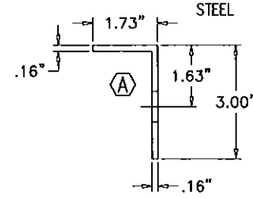

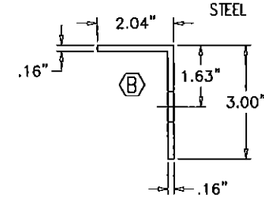

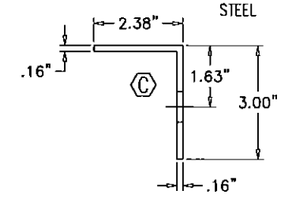

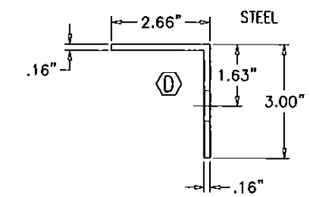

3 X 3 X 8 GA ANGLE 6" LENGTH	QTY: 1
3 X 3 X 8 GA ANGLE Ⓐ CUT LEG – 1.73 6" LENGTH	QTY: 1

3 X 3 X 8 GA ANGLE 6" LENGTH	QTY: 1
3 X 3 X 8 GA ANGLE Ⓑ CUT LEG – 2.04 6" LENGTH	QTY: 1

3 X 3 X 8 GA ANGLE 6" LENGTH	QTY: 1
3 X 3 X 8 GA ANGLE Ⓒ CUT LEG – 2.38 6" LENGTH	QTY: 1

3 X 3 X 8 GA ANGLE 6" LENGTH	QTY: 1
3 X 3 X 8 GA ANGLE Ⓓ CUT LEG – 2.66 6" LENGTH	QTY: 1

CLIPS FOR STEEL/CONCRETE

ANCHOR TYPE AND SPACING BY OTHERS

Engr: JAVAD AHMAD
CIVIL
FLA. PE #70592
C.A.N. 3538

AUG 29 2014

PRODUCT REVISED
as complying with the Florida Building Code
Acceptance No 14-0903.01
Expiration Date 12/26/2018
By
Miami Dade Product Control

ALL DIMENSIONS SHOWN ARE IN INCHES.

AL-FAROOQ CORPORATION
ENGINEERS & PRODUCT DEVELOPMENT
1235 S.W. 87 AVE
MIAMI, FLORIDA 33174
TEL. (305) 264-8100 FAX. (305) 262-6978

COOLER\12-06YIC

SOLUTION AIR HANDLING UNIT

YORK/JOHNSON CONTROLS INC.
1499 EAST PHILADELPHIA STREET
YORK, PA. 17403
TEL. (717) 815-4218 FAX. (717) 815-4198

revisions:

no	date	by	description
A	04.16.13		NO CHANGE THIS SHEET
B	06.21.13		REV. PER RER COMMENTS
C	10.01.13		NO CHANGE THIS SHEET
D	08.22.14		NO CHANGE THIS SHEET

date: 12-10-12
scale: 1/4" = 1"
dr. by: TARIQ
chk. by:

drawing no. 12-06

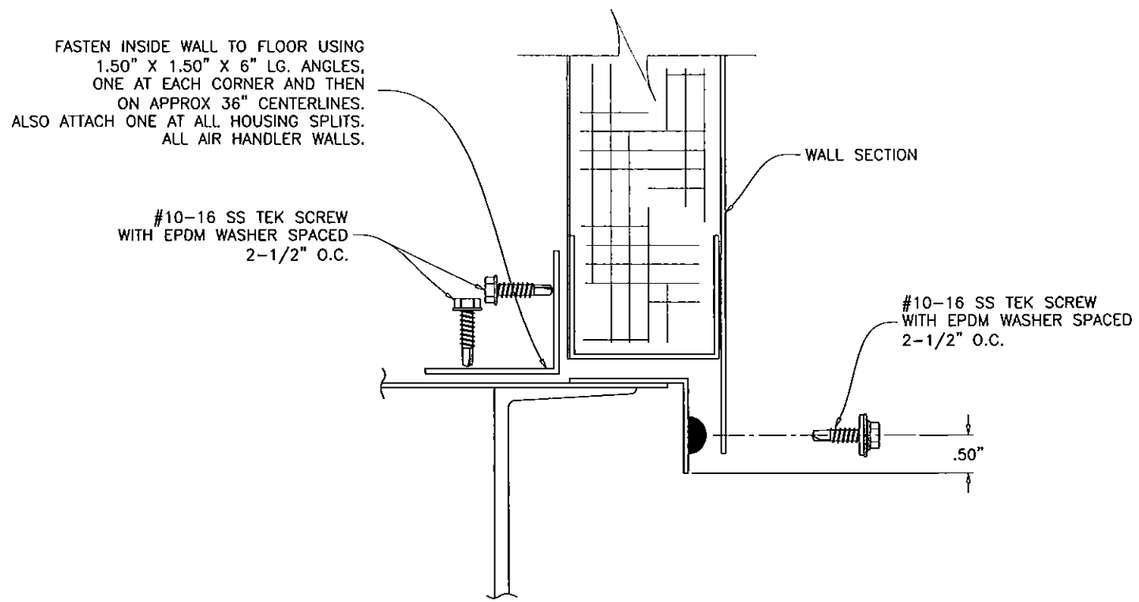

WALLS TO BASE
WALL ATTACHMENT
TO PERIMETER ANGLE

ALL DIMENSIONS SHOWN ARE IN INCHES.

Engr: JAVAD AHMAD
CIVIL
FLA. PE # 70592
C.A.N. 3538

AUG 29 2014

PRODUCT REVISED
as complying with the Florida
Building Code
Acceptance No 14-0903.01
Expiration Date 12/26/2018
By
Miami Dade Product Control

AL-FAROOQ CORPORATION
ENGINEERS & PRODUCT DEVELOPMENT
1235 S.W. 87 AVE
MIAMI, FLORIDA 33174
TEL. (305) 264-8100 FAX. (305) 262-6978

COOLER\12-06YIC

SOLUTION AIR HANDLING UNIT

YORK/JOHNSON CONTROLS INC.
1499 EAST PHILADELPHIA STREET
YORK, PA. 17403
TEL. (717) 815-4198 FAX. (717) 815-4218

revisions:

no	date	by	description
A	04.16.13		CORRECTED DOORS TO FLOORS
B	06.21.13		REV. PER RER COMMENTS
C	10.01.13		NO CHANGE THIS SHEET
D	08.22.14		NO CHANGE THIS SHEET

date: 12-10-12
scale: -
dr. by: TARIQ
chk. by:

drawing no.
12-06

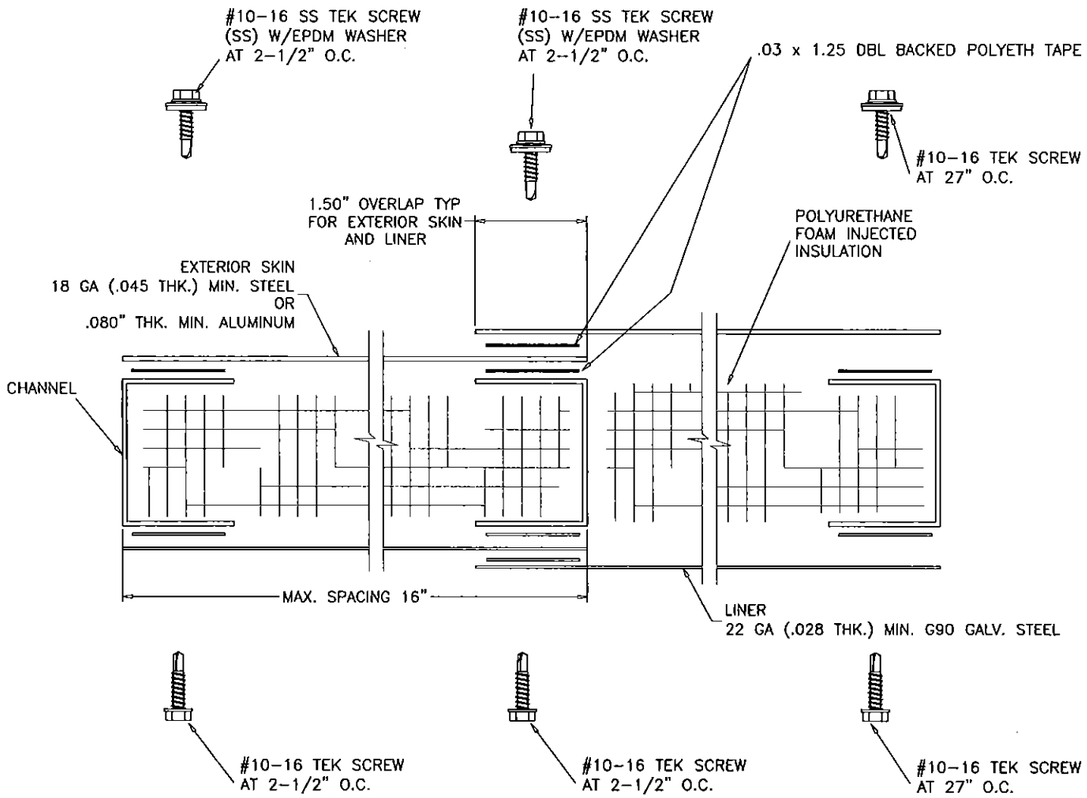

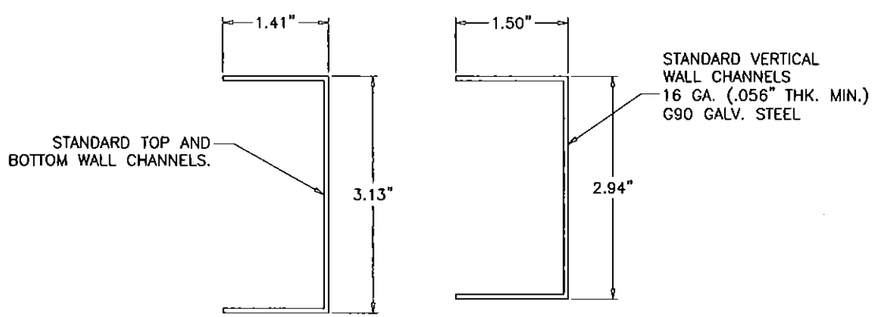

NOTES:
1. FASTENER SPACING SEE SHEET 11 FOR ELEVATION LAYOUT.
2. DBL BACKED TAPE MUST BE APPLIED TO ALL POSTS AND OVERLAPS ON THE EXTERIOR SKIN SIDE.
3. NOMINAL HOUSING THICKNESS IS 3.00 INCHES.

EXTERIOR WALL CROSS SECTION

X-X

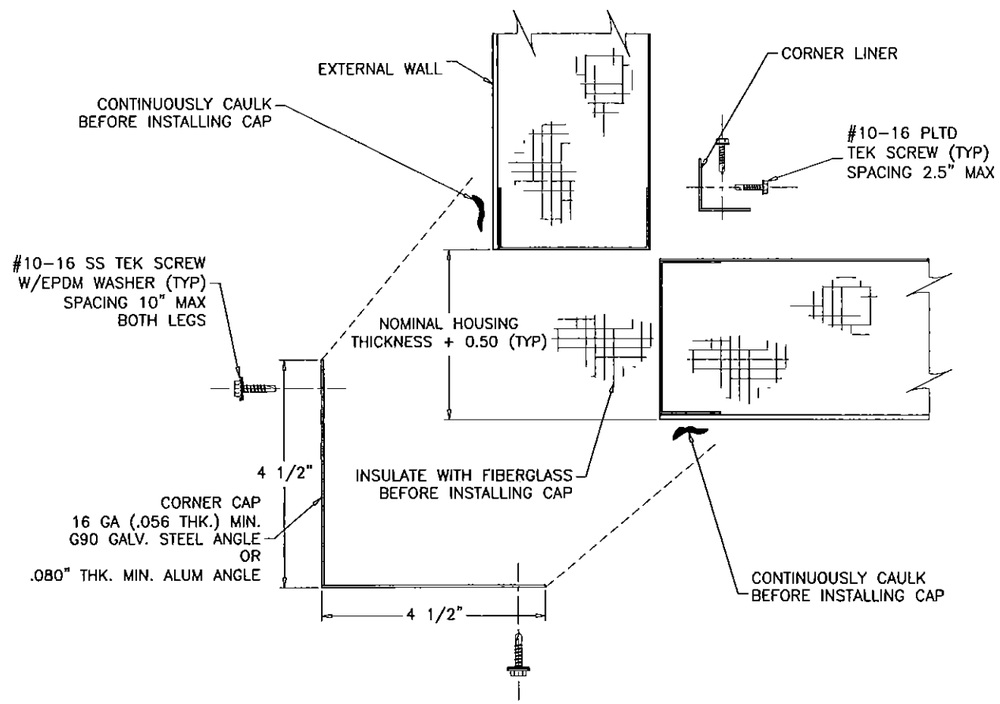

NOTES:
1. THIS DETAIL IS FOR ALL CORNERS.

CORNER CAP & LINER INSTALLATION

ALL DIMENSIONS SHOWN ARE IN INCHES.

Engr: JAVAD AHMAD
CIVIL
FLA. PE # 70592
C.A.N. 3538
AUG 29 2014

PRODUCT REVISED
as complying with the Florida Building Code
Acceptance No 14-0903.01
Expiration Date 12/26/2018
By
Miami Dade Product Control

AL-FAROOQ CORPORATION
ENGINEERS & PRODUCT DEVELOPMENT
1235 S.W. 87 AVE
MIAMI, FLORIDA 33174
TEL. (305) 264-8100 FAX. (305) 262-6978

COOLER\12-06YIC

SOLUTION AIR HANDLING UNIT

YORK/JOHNSON CONTROLS INC.
1499 EAST PHILADELPHIA STREET
YORK, PA. 17403
TEL. (717) 815-4218 FAX. (717) 815-4198

revisions:

no	date	by	description
A	04.16.13		Added /ROOF WALL Cross Sec
B	06.21.13		REV. PER RER COMMENTS
C	10.01.13		REV. PER RER COMMENTS
D	08.22.14		NO CHANGE THIS SHEET

date: 12-10-12
scale: 1/2" = 1"
dr. by: TARIQ
chk. by:

drawing no. 12-06

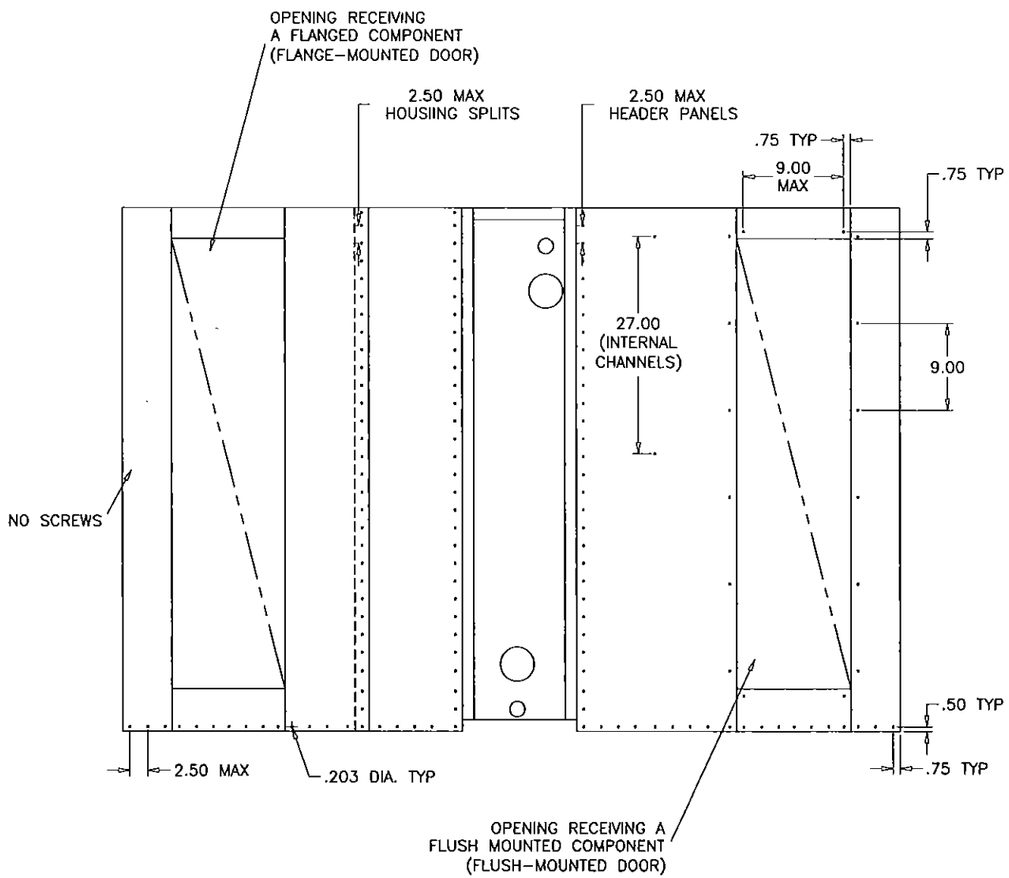

NOTES:
1. DO NOT INSTALL SCREWS ON EITHER END OF THE WALL ASSEMBLY OR ALONG THE TOP. THESE WILL BE COVERED ONCE THE WALL ASEMBLY IS INSTALLED ON THE UNIT.
2. HOLD SKINS BACK .125 FROM ALL SIDES OF OPENINGS THAT ARE FRAMED BY CHANNELS ON 4 SIDES.

SCREW SPACING GUIDELINES
FOR TYP. WALL AND ROOF EXTERIOR AND LINER SKINS

CONSTRUCTION:
THE CONSTRUCTION OF THE OUTDOOR ROOF IS SIMILAR TO THE EXTERIOR WALL CONSTRUCTION WITH THE EXCEPTION THAT THE POST IS A SLOPED CHANNEL AND WILL BE REFERRED TO AS A TRUSS.
REFER TO THE EXTERNAL WALL SECTION FOR GENERAL CONSTRUCTION DETAILS AND MATERIAL STANDARDS.
ACU-SHIELD SHOULD BE APPLIED AS A STANDARD.
USE SAME GAGE EXTERIOR MATERIAL FOR THE ROOF THAT IS ON EXTERIOR OF THE WALL OF THE UNIT.
USE G90 GALV. FOR ALL ROOF EXTERIORS GETTING COATED WITH ACU-SHIELD.

GUIDELINES:
THE OUTDOOR ROOF WILL EITHER HAVE A SINGLE OR DOUBLE SLOPE WITH THE RISE BEING 1/4" PER FOOT (SEE DETAILS BELOW). SLOPE DIRECTION WILL BE INDICATED ON THE SUBMITTAL DRAWING. IF A SINGLE SLOPED ROOF IS REQUIRED, PITCH WILL TYPICALLY BE AWAY FROM THE ACCESS SIDE OF THE UNIT.

IF AN SQ IS GENERATED REQUIRING R14 MIN INSULATION, DETAILING WILL BE RESPONSIBLE FOR MAKING THE NECESSARY CHANGES TO THE PRODUCTION DRAWINGS TO MEET THIS REQUIREMENT AS SHOWN BELOW.

ROOF SECTIONS ARE ONLY TO BE SPLIT DOWN THE LENGTH OF THE SERVICE CORRIDOR WHEN A SHIPPING SPLIT IS REQUIRED. THE STANDARD DESIGN FOR DOUBLE SLOPED ROOFS WILL BE WITH THE RIDGE FALLING ON THE CENTER LINE OF THE UNIT. EXCEPTION TO STANDARD DESIGN: ALL UNITS WITH A SHIPPING SPLIT AT THE CORRIDOR WALL THAT REQUIRE A DOUBLE SLOPE ROOF MUST HAVE THE ROOF PEAK LOCATED AT THE CORRIDOR WALL. SEE DRAWINGS IN THIS SECTION FOR HOW THIS IS ACCOMPLISHED.

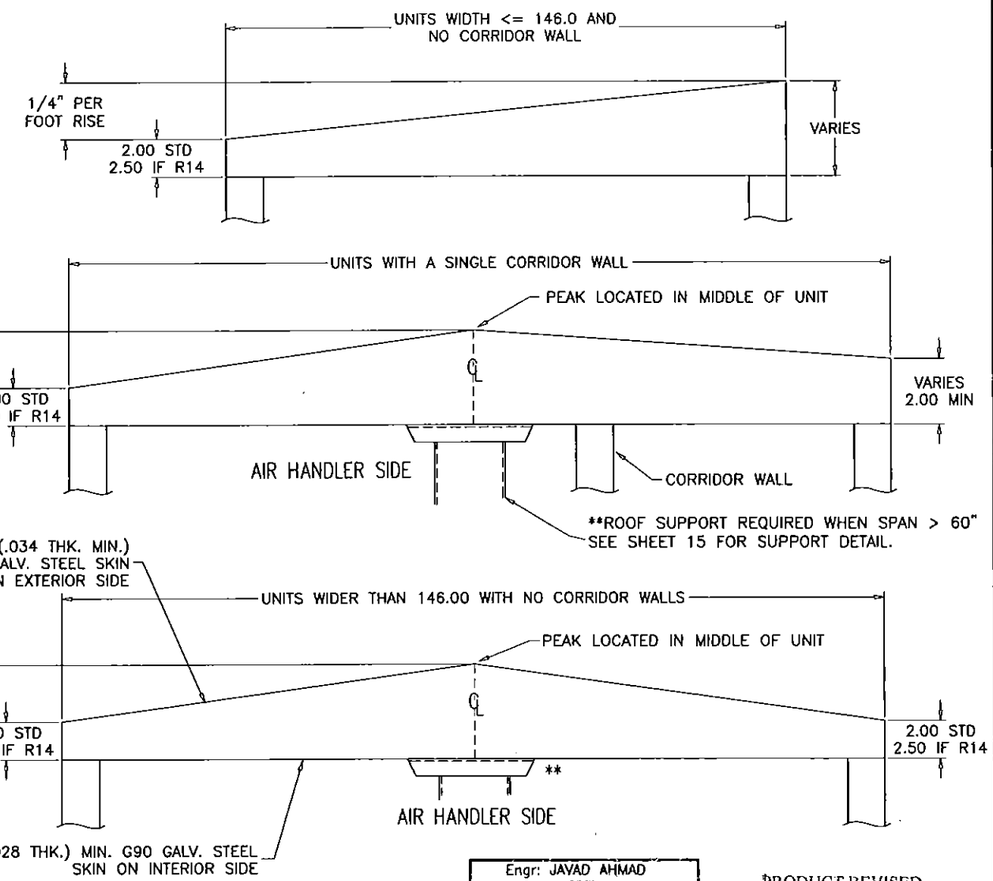

OUTDOOR ROOF GUIDELINES
ROOF TRUSS SLOPE AND SUPPORT

Engr: JAVAD AHMAD
CIVIL
FLA. PE # 70592
C.A.N. 3538
AUG 29 2014

PRODUCT REVISED
as complying with the Florida Building Code
Acceptance No 14-0903.01
Expiration Date 12/26/2018
By
Miami Dade Product Control

ALL DIMENSIONS SHOWN ARE IN INCHES.

AL-FAROOQ CORPORATION
ENGINEERS & PRODUCT DEVELOPMENT
1235 S.W. 87 AVE
MIAMI, FLORIDA 33174
TEL (305) 264-8100 FAX. (305) 262-6978

COOLER\12-06YIC

SOLUTION AIR HANDLING UNIT

YORK/JOHNSON CONTROLS INC.
1499 EAST PHILADELPHIA STREET
YORK, PA. 17403
TEL. (717) 815-4218 FAX. (717) 815-4198

revisions:

no	date	by	description
A	04.16.13		NO CHANGE THIS SHEET
B	06.21.13		REV. PER RER COMMENTS
C	10.01.13		REV. PER RER COMMENTS
D	08.22.14		NO CHANGE THIS SHEET

date: 12-10-12
scale: -
dr. by: TARIQ
chk. by:

drawing no.
12-06

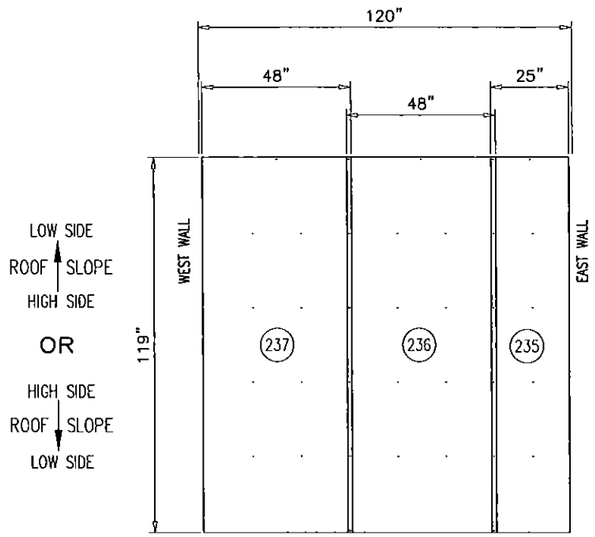

ROOF LINERS (VIEWED FROM LINER SIDE)

AIR FLOW

GENERAL NOTES:
1. LINERS HELD BACK .125 FROM ALL OPENINGS FRAMED BY 4 CHANNELS.
2. HEADER/FOOTER PIECES AT OPENINGS PLACED UNDER FULL LENGTH PIECES.
3. STANDARD INTERIOR LINER OVERLAP IS 1.50".

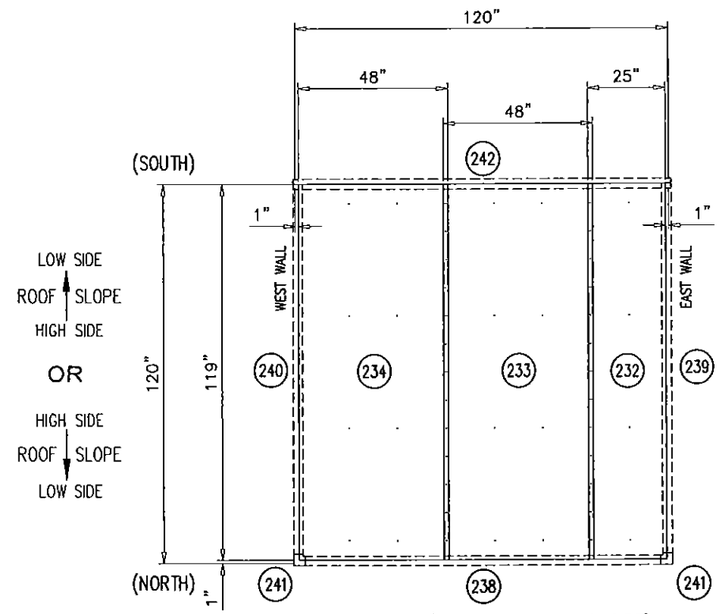

ROOF SKINS (VIEWED FROM LINER SIDE)

AIR FLOW

GENERAL NOTES:
1. SKINS HELD BACK .125 FROM ALL OPENINGS FRAMED BY 4 CHANNELS.
2. HEADER/FOOTER PIECES AT OPENINGS PLACED UNDER FULL LENGTH PIECES.
3. STANDARD EXTERIOR SKIN OVERLAP IS 1.50".

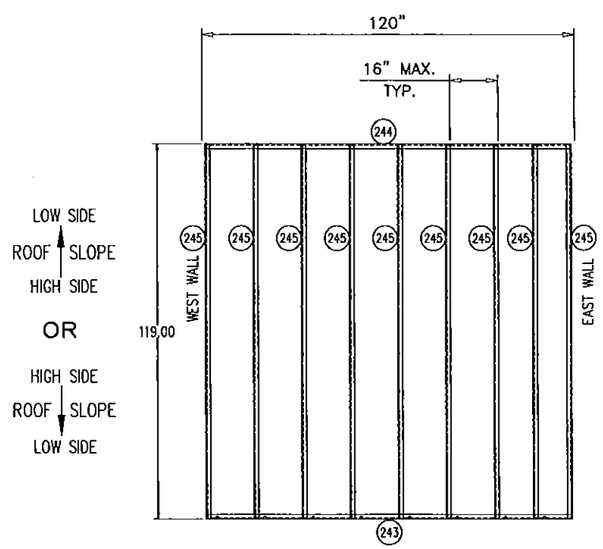

ROOF CHANNELS (VIEWED FROM LINER SIDE)

AIR FLOW

LEVEL	ITEM	PART NO. *=Stocked	TOTAL QTY.	SORT FIELD	DESCRIPTION	SHEET/REF.	QTY. ONE
	231		1	ROOF ASSEMBLY	ROOF ASSEMBLY: 120.00 X 120.00	4.03	1
	252	391 20002 002	40CF	-10% OFFAL - OCF@3M MIX, PART A,B, & FREON			40CF
	242		1	C:ANGLEO-COVER	3.25W X 121.50L X SHEET,GLV,G90,20GA		1
	232		1	C:EXT-SKIN-O	25.00W X 119.00L X SHEET,GLV,G90,20GA		1
	233		1	C:EXT-SKIN-O	48.00W X 119.00L X SHEET,GLV,G90,20GA		1
	234		1	C:EXT-SKIN-O	48.00W X 119.00L X SHEET,GLV,G90,20GA		1
	240		1	C:HL3.75X6.25	10.70W X 117.00L X SHEET,GLV,G90,16GA		1
	235		1	C:INT-LINER-O	24.94W X 118.94L X SHEET,GLV,G90,22GA		1
	236		1	C:INT-LINER-O	47.97W X 118.94L X SHEET,GLV,G90,22GA		1
	237		1	C:INT-LINER-O	47.97W X 118.94L X SHEET,GLV,G90,22GA		1
	239		1	C:LH6.25X3.75	10.70W X 117.00L X SHEET,GLV,G90,16GA		1
	238		1	C:ROOF-CAP	8.20W X 113.94L X SHEET,GLV,G90,16GA		1
	241		2	C:ROOF-CNR-CAP	9.90W X 8.33L X SHEET,GLV,G90,16GA		2
	245		9	C:RT5.69X3.19	8.49W X 118.75L X SHEET,GLV,G90,16GA		9
	243		1	C:SC1.50X3.38-O	6.18W X 118.00L X SHEET,GLV,G90,16GA		1
	244		1	C:SC1.50X5.88-O	8.68W X 118.00L X SHEET,GLV,G90,16GA		1
	246	013 03317 050	9.90Z	CAULK	CAULK,AL_GRAY,SIKAFLEX_221		9.90Z
	249	013 01412 010	0.67GL	COATING	COATING,ACU-SHIELD,WHITE		0.67GL
	250	* 021 30531 011	222	SCREW	SCREW,TEK,410SS,EPDM,10-16_.75		222
	251	* 021 30530 001	52	SCREW	SCREW,TEX,PLTD,10-16_.75		52
	253	* 091 20014 001	12	SUPER ANGLE	ANGLE,WALL_TO_ROOF,GLV	YC86-033	12
	247	028 14900 010	2677IN	TAPE	TAPE,POLYETH,DBL,.03W_1.25THK		2677IN
	248	028 07417 010	243IN	TAPE	TAPE,BUTYL,1.25W_.13THK		243IN

Engr: JAVAD AHMAD
CIVIL
FLA. PE # 70592
C.A.N. 3538

AUG 29 2014

PRODUCT REVISED
as complying with the Florida
Building Code
Acceptance No 14-0903.01
Expiration Date 12/26/2018
By
Miami Dade Product Control

AL-FAROOQ CORPORATION
ENGINEERS & PRODUCT DEVELOPMENT
1235 S.W. 87 AVE
MIAMI, FLORIDA 33174
TEL (305) 264-8100 FAX. (305) 262-6978

COOLER\12-06YIC

SOLUTION AIR HANDLING UNIT

YORK/JOHNSON CONTROLS INC.
1499 EAST PHILADELPHIA STREET
YORK, PA. 17403
TEL. (717) 815-4218 FAX. (717) 815-4198

revisions:			
no	date	by	description
C	10.01.13		REV. PER RER COMMENTS
D	08.22.14		NO CHANGE THIS SHEET

date: 12-10-12
scale: -
dr. by: TARIQ
chk. by:

drawing no.
12-06

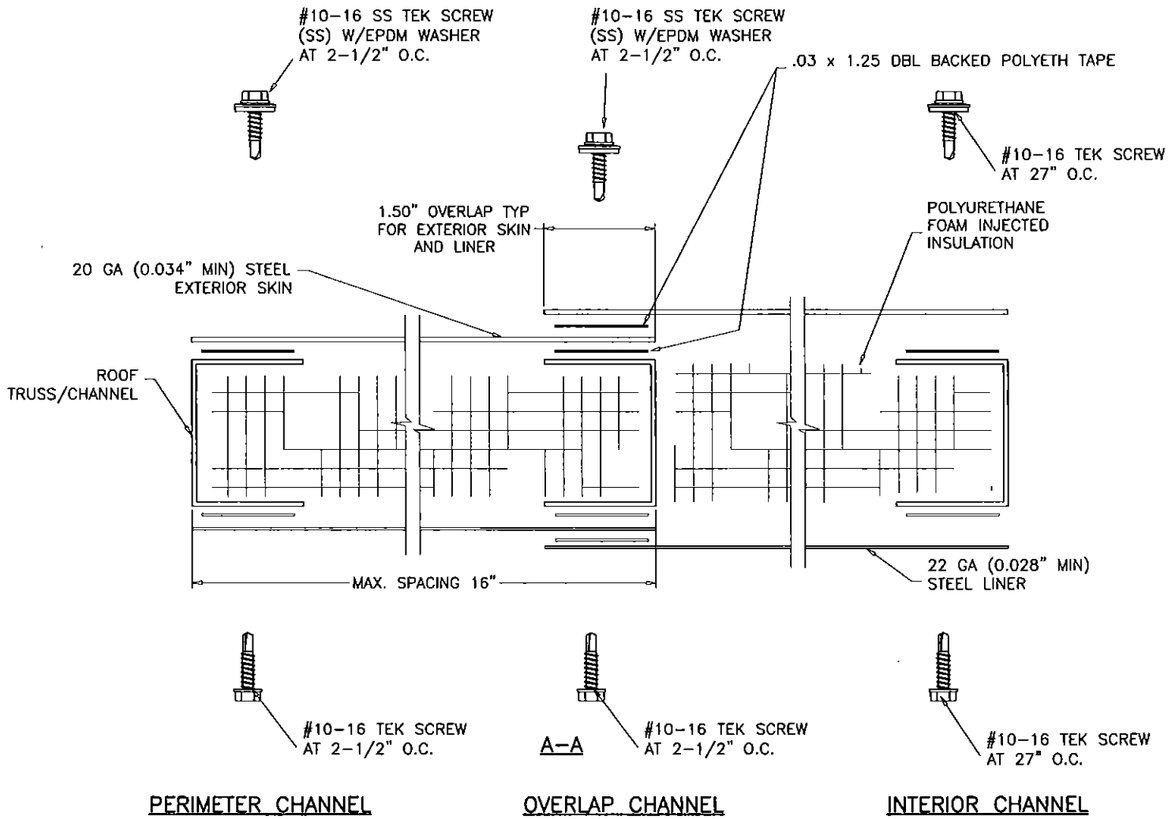

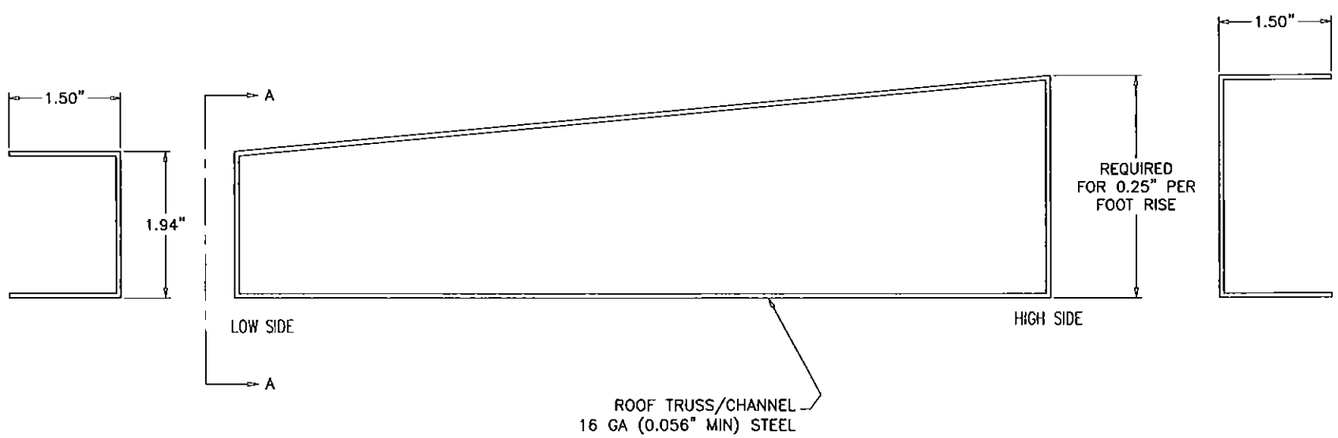

NOTES:
1. FASTENER SPACING FOR ROOF AND WALLS ARE THE SAME.
2. DBL BACKED TAPE MUST BE APPLIED TO ALL POSTS AND OVERLAPS ON THE EXTERIOR SKIN SIDE.
3. NOMINAL ROOF THICKNESS IS 2.00 INCHES AT SIDES WITH 1/4" PER FOOT SLOPE TO ROOF PEAK

ROOF
CROSS SECTION

Engr: JAVAD AHMAD
CIVIL
FLA. PE # 70592
C.A.N. 3538
AUG 29 2014

PRODUCT REVISED
as complying with the Florida Building Code
Acceptance No 14-0903.01
Expiration Date 12/26/2019
By
Miami Dade Product Control

AL-FAROOQ CORPORATION
ENGINEERS & PRODUCT DEVELOPMENT
1235 S.W. 87 AVE
MIAMI, FLORIDA 33174
TEL. (305) 264-8100 FAX. (305) 262-6978

COOLER\12-06YIC

SOLUTION AIR HANDLING UNIT

YORK/JOHNSON CONTROLS INC.
1499 EAST PHILADELPHIA STREET
YORK, PA. 17403
TEL. (717) 815-4218 FAX. (717) 815-4198

revisions:

no	date	by	description
C	10.01.13		REV. PER RER COMMENTS
D	08.22.14		NO CHANGE THIS SHEET

date: 12-10-12
scale: 1/2" = 1"
dr. by: TARIQ
chk. by:

drawing no.
12-06

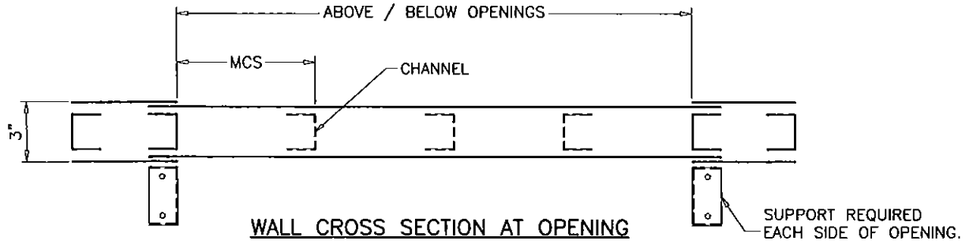

WALL CROSS SECTION AT OPENING

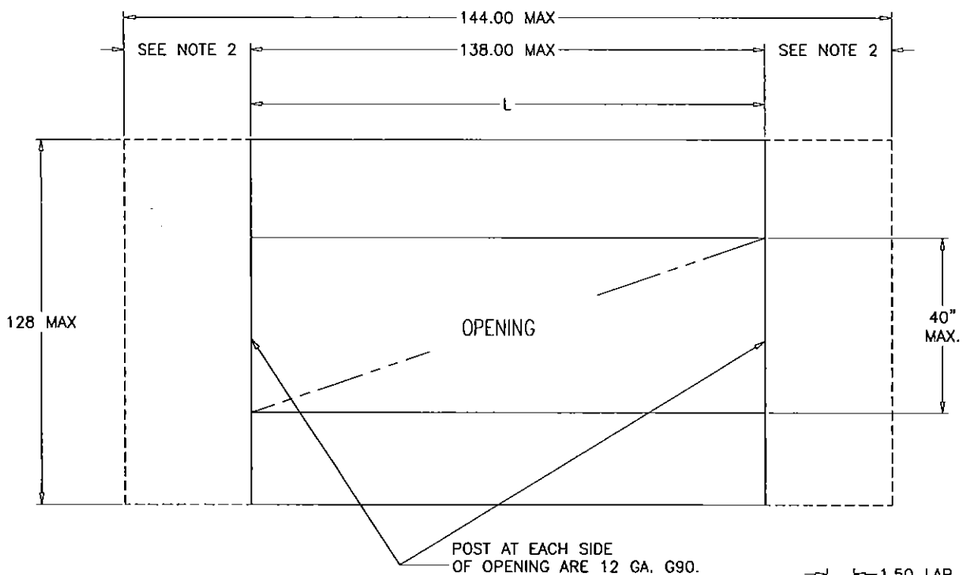

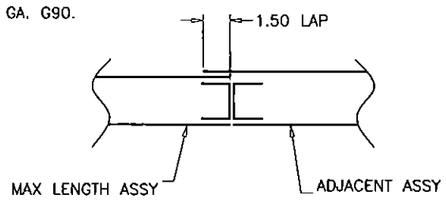

NOTES:
1. GUIDELINES APPLY TO 3.00 MIN. WALL DEPTH.
   GUIDELINES ALSO APPLY TO 18 GA. STEEL AND ALUMINUM(.080 MIN.) EXTERIOR SKINS.
2. MAXIMUM CHANNEL SPACING (MCS) IS 16".
3. ADD AN 1.50 TAB ON WALL ASSY'S EXCEEDING THE MAX ASSY LENGTH.
4. CONSULT ENGINEERING FOR ANY SITUATION NOT COVERED.

GUIDELINES FOR MAX. WALL ASSEMBLY AND OPENING SIZING

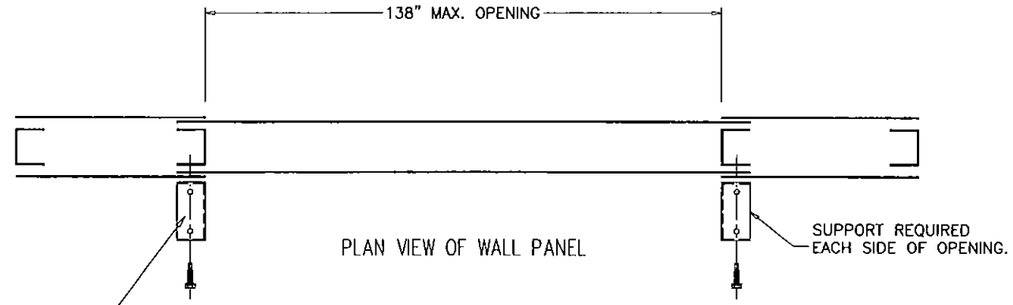

PLAN VIEW OF WALL PANEL

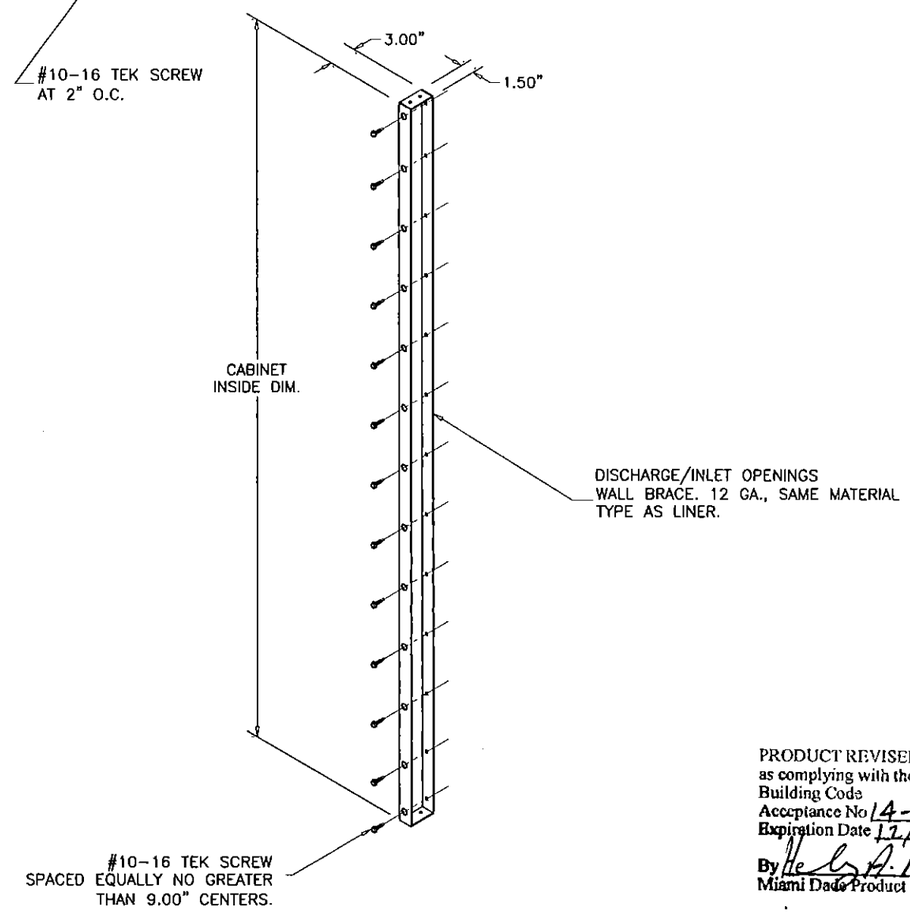

PRODUCT REVISED
as complying with the Florida
Building Code
Acceptance No 14-0903.01
Expiration Date 12/26/2018
By
Miami Dade Product Control

GUIDELINES FOR BRACING WALL ASSY AND OPENING SIZING DISCHARGE/INLET OPENINGS

Engr: JAVAD AHMAD
CIVIL
FLA. PE # 70592
C.A.N. 3538
AUG 29 2014

ALL DIMENSIONS SHOWN ARE IN INCHES.

AL-FAROOQ CORPORATION
ENGINEERS & PRODUCT DEVELOPMENT
1235 S.W. 87 AVE
MIAMI, FLORIDA 33174
TEL (305) 264-8100 FAX. (305) 262-6978

COOLER\12-06YIC

SOLUTION AIR HANDLING UNIT

YORK/JOHNSON CONTROLS INC.
1499 EAST PHILADELPHIA STREET
YORK, PA. 17403
TEL. (717) 815-4198 FAX. (717) 815-4218

revisions:

no	date	by	description
A	04.16.13		NO CHANGE THIS SHEET
B	06.21.13		REV. PER RER COMMENTS
C	10.01.13		REV. PER RER COMMENTS
D	08.22.14		NO CHANGE THIS SHEET

date: 12-10-12
scale: -
dr. by: TARIQ
chk. by:

drawing no.
12-06

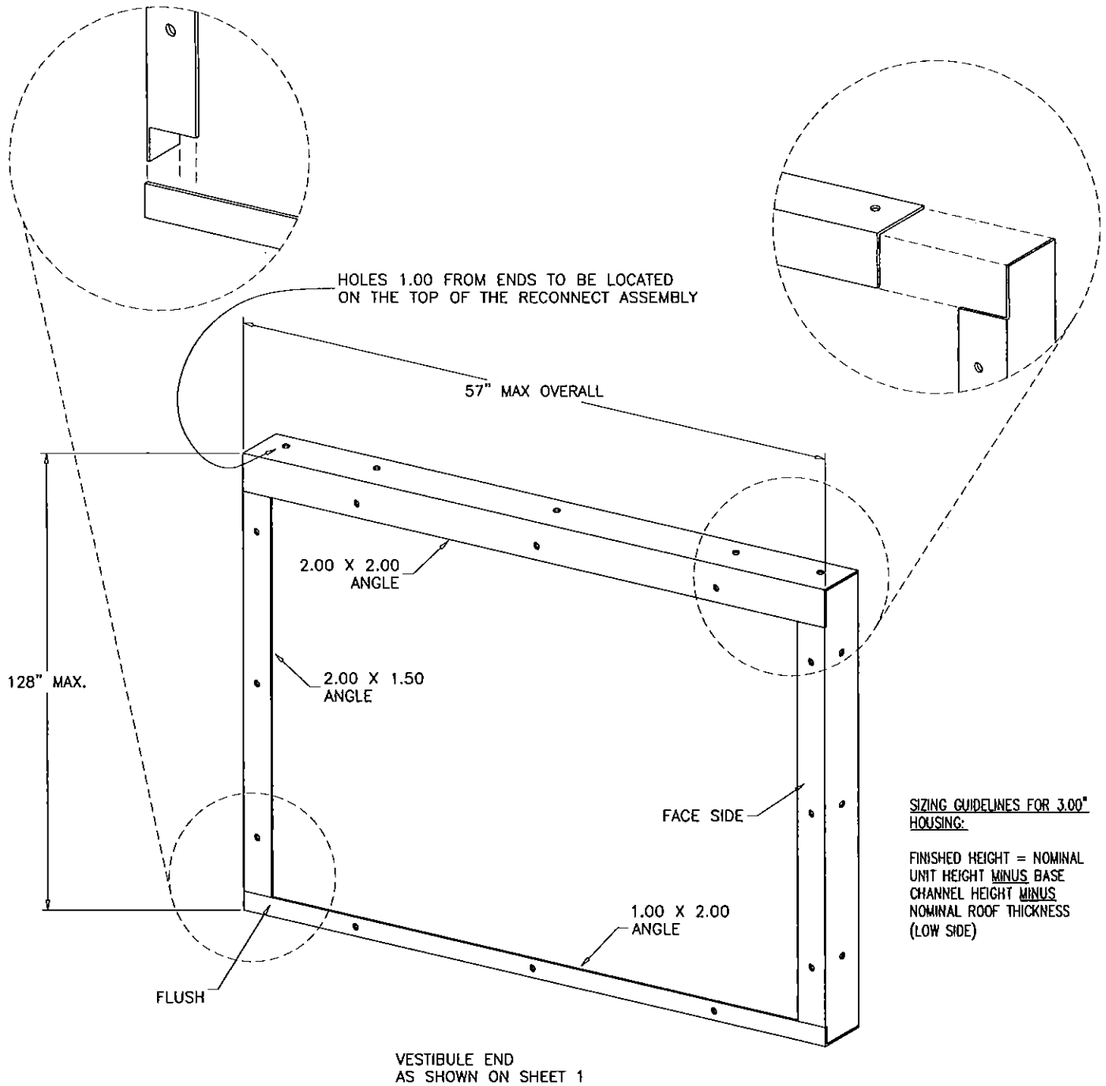

SIZING GUIDELINES FOR 3.00" HOUSING:

FINISHED HEIGHT = NOMINAL UNIT HEIGHT MINUS BASE CHANNEL HEIGHT MINUS NOMINAL ROOF THICKNESS (LOW SIDE)

NOTES:

1. WELD INTO ASSY. WHERE APPLICABLE, ALL WELDS ARE CONTINUOUS 0.18" FILLET TYPE. DO NOT WELD ON THE FACE SIDE UNDER ANY CIRCUMSTANCES. IF SPLIT ASSY, BUTT WELD ON INSIDE OF ANGLE.
2. THERE MAY BE TIMES WHEN COMPONENTS MAY INTERFERE WITH THE INTERIOR SUPPORT(S). THIS WOULD TYPICALLY HAPPEN AT FAN DISCHARGE/INTAKE WALLS AND WHEN FILTERS ARE LOADED ACROSS A SPLIT. IN THESE SITUATIONS, THE DETAILER IS RESPONSIBLE FOR PROVIDING THE SHOP A LAYOUT SPECIFYING THE LOCATION OF THE SUPPORT(S).
3. THE STANDARD MATERIAL TYPE IS 12 GA G90.
4. PART LENGTH = FINISHED ASSY HEIGHT – 0.25".

INTERNAL RECONNECT ASSEMBLY FOR AIRWAY WIDTHS AND CORRIDOR UNIT LENGTHS

ALL DIMENSIONS SHOWN ARE IN INCHES.

PRODUCT REVISED
as complying with the Florida Building Code
Acceptance No 14-0903.01
Expiration Date 12/26/2018
By
Miami Dade Product Control

Engr: JAVAD AHMAD
CIVIL
FLA. PE # 70592
C.A.N. 3538
AUG 29 2014

AL-FAROOQ CORPORATION
ENGINEERS & PRODUCT DEVELOPMENT
1235 S.W. 87 AVE
MIAMI, FLORIDA 33174
TEL. (305) 264-8100 FAX. (305) 262-6978

COOLER\12-06YIC

SOLUTION AIR HANDLING UNIT

YORK/JOHNSON CONTROLS INC.
1499 EAST PHILADELPHIA STREET
YORK, PA. 17403
TEL. (717) 815-4218 FAX. (717) 815-4198

revisions:

no	date	by	description
A	04.16.13		NO CHANGE THIS SHEET
B	06.21.13		REV. PER RER COMMENTS
C	10.01.13		REV. PER RER COMMENTS
D	08.22.14		NO CHANGE THIS SHEET

date: 12-10-12
scale: –
dr. by: TARIQ
chk. by:

drawing no.
12-06

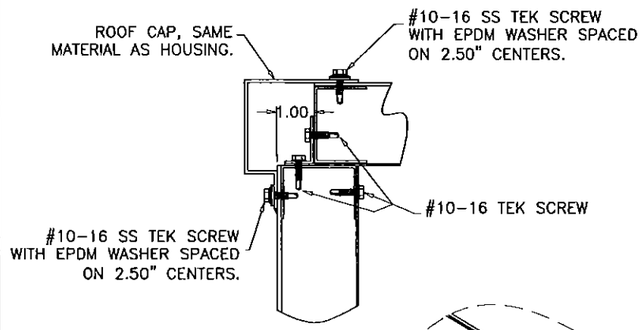

CROSS SECTION OF WALL/ROOF ASS'Y

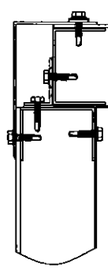

CROSS SECTION OF CORRIDOR WALL/ROOF ASS'Y

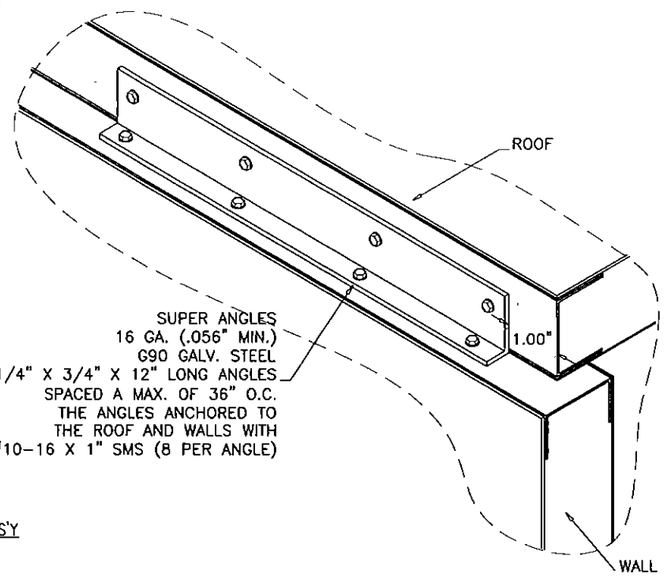

NOTES:

1. THE PURPOSE OF THE ANGLE IS TWO-FOLD. TO LIMIT LATERAL MOVEMENT OF THE WALL WHEN UNDER PRESSURE AND TO MAKE THE FIT OF THE ROOF LINER TO THE WALL LINER AS TIGHT AS REASONABLY POSSIBLE.
2. ROOF SIDES REQUIRE ANGLES ON 36" MAX. CENTERS.
3. ANGLES ARE REQUIRED AT EVERY COIL PANEL, HOUSING SPLIT(1" FROM SPLIT ON EACH SIDE OF SPLIT), AND 6" FILTER DOOR AS SHOWN ABOVE.

WALL TO ROOF ATTACHMENT GUIDELINES

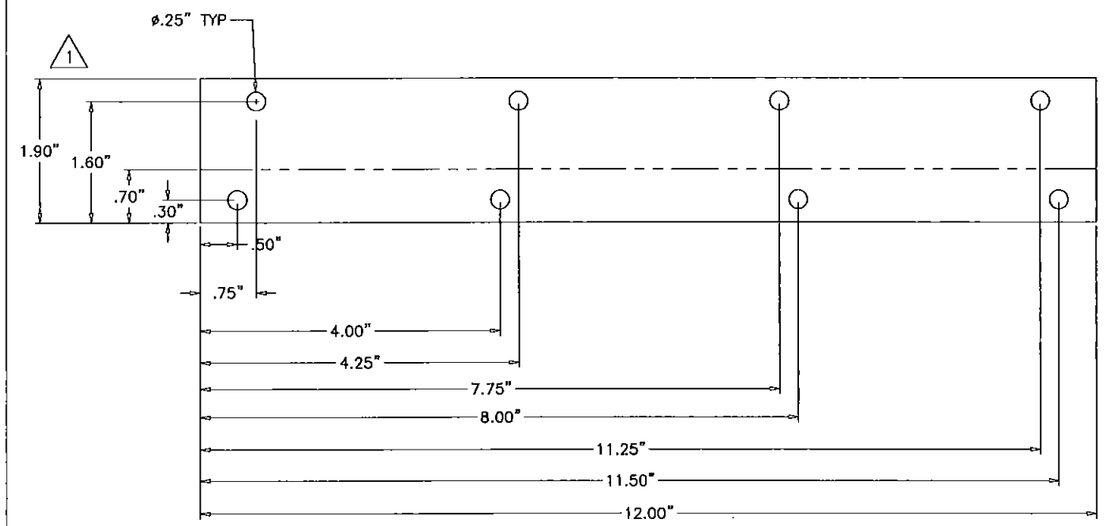

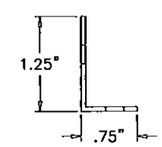

PRODUCT REVISED
as complying with the Florida
Building Code
Acceptance No 14-0903.01
Expiration Date 12/26/2018
By
Miami Dade Product Control

WALL TO ROOF ATTACHMENT ANGLE

Engr: JAVAD AHMAD
CIVIL
FLA. PE # 70592
C.A.N. 3538
AUG 29 2014

ALL DIMENSIONS SHOWN ARE IN INCHES.

AL-FAROOQ CORPORATION
ENGINEERS & PRODUCT DEVELOPMENT
1235 S.W. 87 AVE
MIAMI, FLORIDA 33174
TEL (305) 264-8100 FAX. (305) 262-6978

COOLER\12-061C

SOLUTION AIR HANDLING UNIT

YORK/JOHNSON CONTROLS INC.
1499 EAST PHILADELPHIA STREET
YORK, PA. 17403
TEL. (717) 815-4218 FAX. (717) 815-4198

revisions:

no	date	by	description
A	04.16.13		NO CHANGE THIS SHEET
B	06.21.13		NO CHANGE THIS SHEET
C	10.01.13		REV. PER RER COMMENTS
D	08.22.14		NO CHANGE THIS SHEET

date: 12-10-12
scale: –
dr. by: TARIQ
chk. by:

drawing no.
12-06

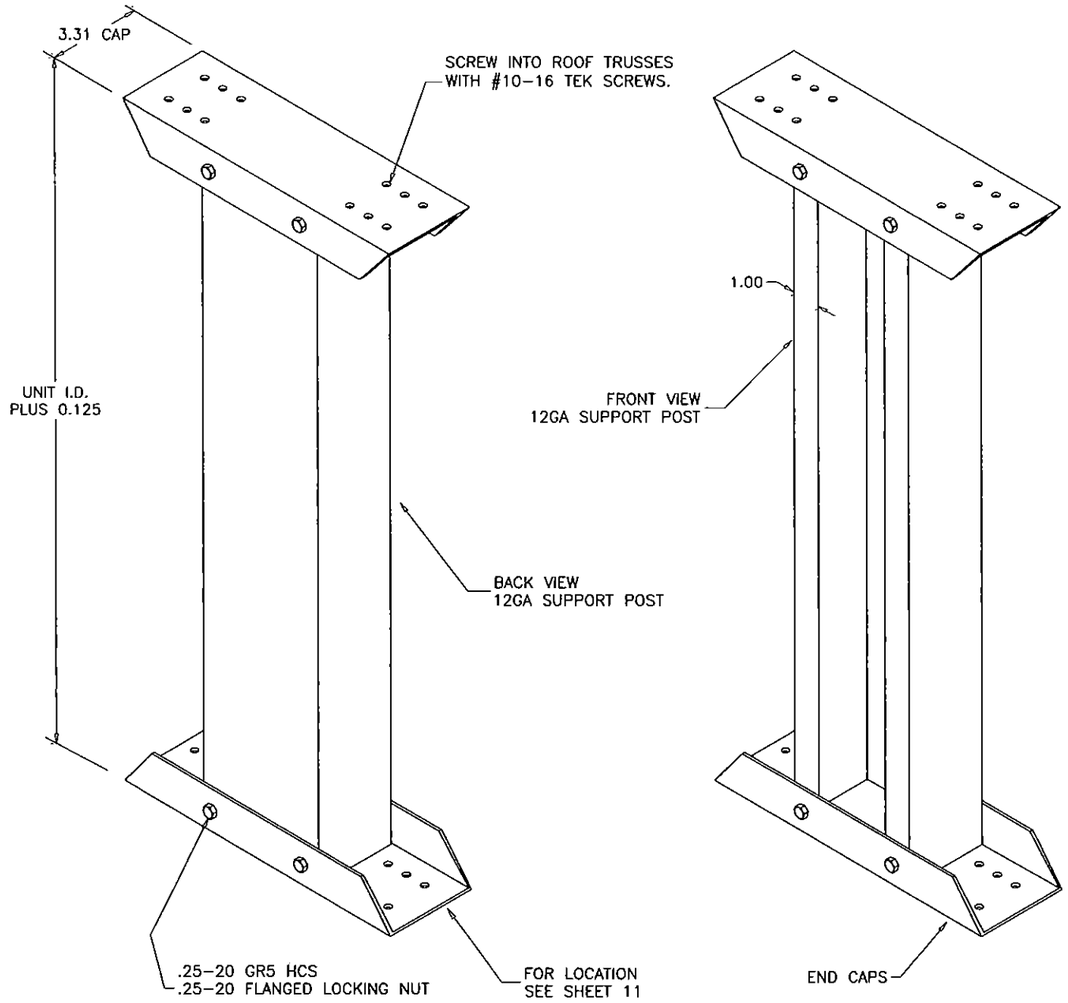

SEE SHEET 11 FOR LOCATION

NOTES:
1. AS A STANDARD ROOF SUPPORT POSTS ARE REQUIRED ON ROOFS WHEN SPAN IS GREATER THAN 60" IN DIRECTION OF AIRFLOW AND ROOFS SPLIT DUE TO DOUBLE SLOPE REQUIREMENTS.
2. USE #10-16 TEK SCREW FOR SECURING COLUMN BASE TO FLOOR.
3. USE STAINLESS STEEL FASTENERS ON STAINLESS CAP AND BASE.

TWO PIECE ROOF PERMANENT SUPPORT

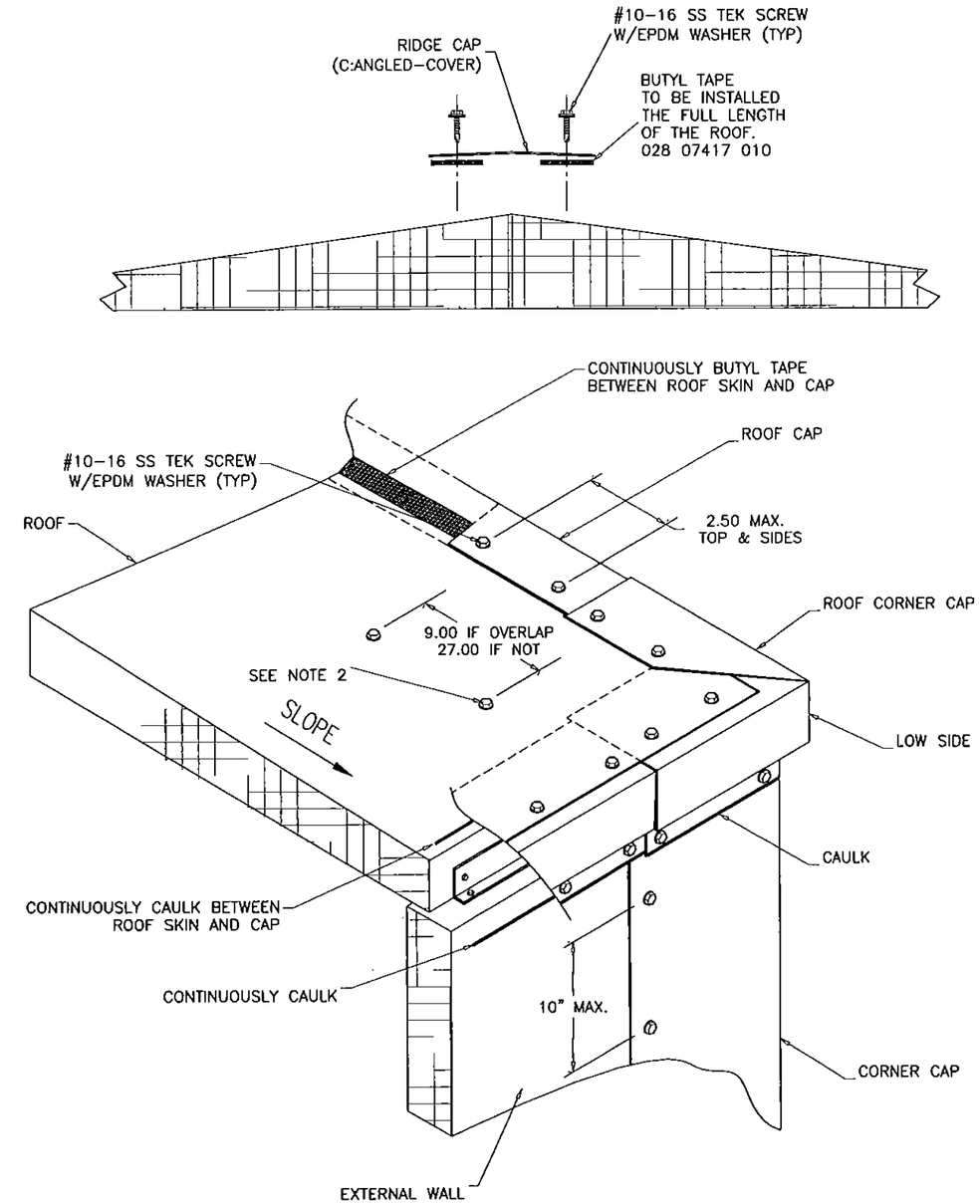

NOTES:
1. ALL LAP JOINTS MUST HAVE CAULK BETWEEN THE LAP. SURFACE CAULKING ONLY IS NOT ACCEPTABLE.
2. UNIT ASSEMBLY TO INSTALL SCREWS INTENTIONALLY LEFT OUT BY ROOF BUILDERS
3. HIGH SIDE INSTALLATION IS THE SAME AS ON INDOOR ROOFS.

OUTDOOR UNIT ROOF CAP INSTALLATION

Engr: JAVAD AHMAD
CIVIL
FLA. PE # 70592
C.A.N. 3538
AUG 29 2014

PRODUCT REVISED
as complying with the Florida Building Code
Acceptance No 14-0903.01
Expiration Date 12/26/2018
By
Miami Dade Product Control

ALL DIMENSIONS SHOWN ARE IN INCHES.

AL-FAROOQ CORPORATION
ENGINEERS & PRODUCT DEVELOPMENT
1235 S.W. 87 AVE
MIAMI, FLORIDA 33174
TEL (305) 264-8100 FAX. (305) 262-6978

COOLER\12-06YIC

SOLUTION AIR HANDLING UNIT

YORK/JOHNSON CONTROLS INC.
1499 EAST PHILADELPHIA STREET
YORK, PA. 17403
TEL. (717) 815-4218 FAX. (717) 815-4198

revisions:

no	date	by	description
A	04.16.13		NO CHANGE THIS SHEET
B	06.21.13		REV. PER RER COMMENTS
C	10.01.13		REV. PER RER COMMENTS
D	08.22.14		NO CHANGE THIS SHEET

date: 12-10-12
scale: -
dr. by: TARIQ
chk. by:

drawing no. 12-06

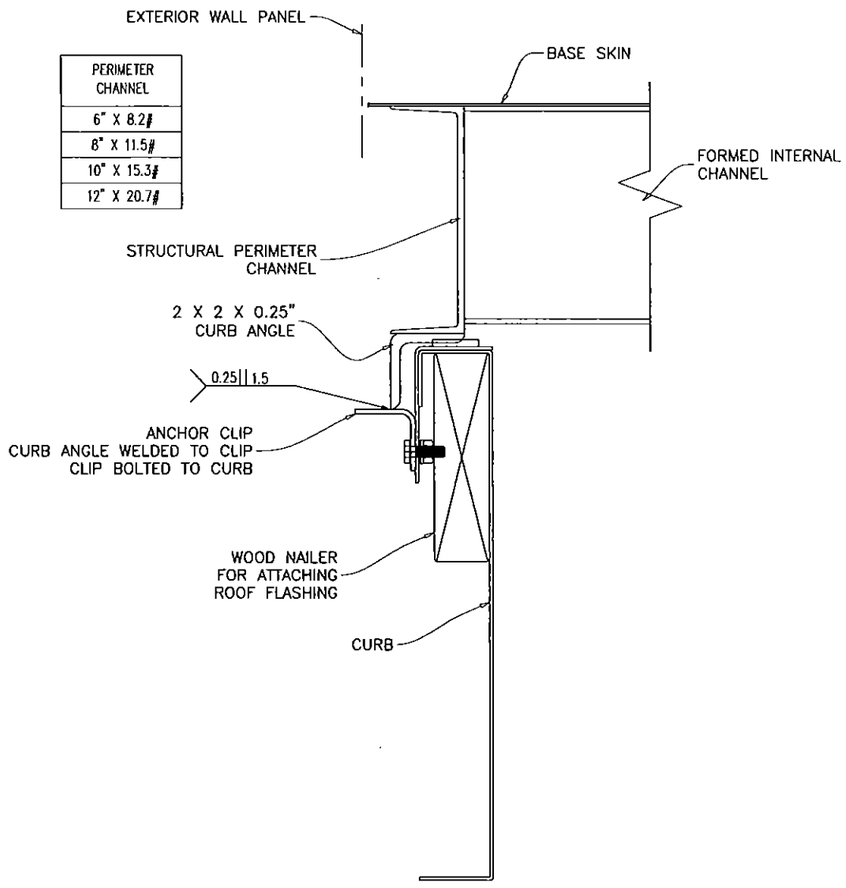

PERIMETER CHANNEL
6" X 8.2#
8" X 11.5#
10" X 15.3#
12" X 20.7#

ROOF CURB HOLD DOWN DETAIL

SHALL BE DESIGNED FOR EACH SITE SPECIFIC BY A FLORIDA P.E. AND REVIEWED BY THE CORRESPONDING BUILDING DEPARTMENT.

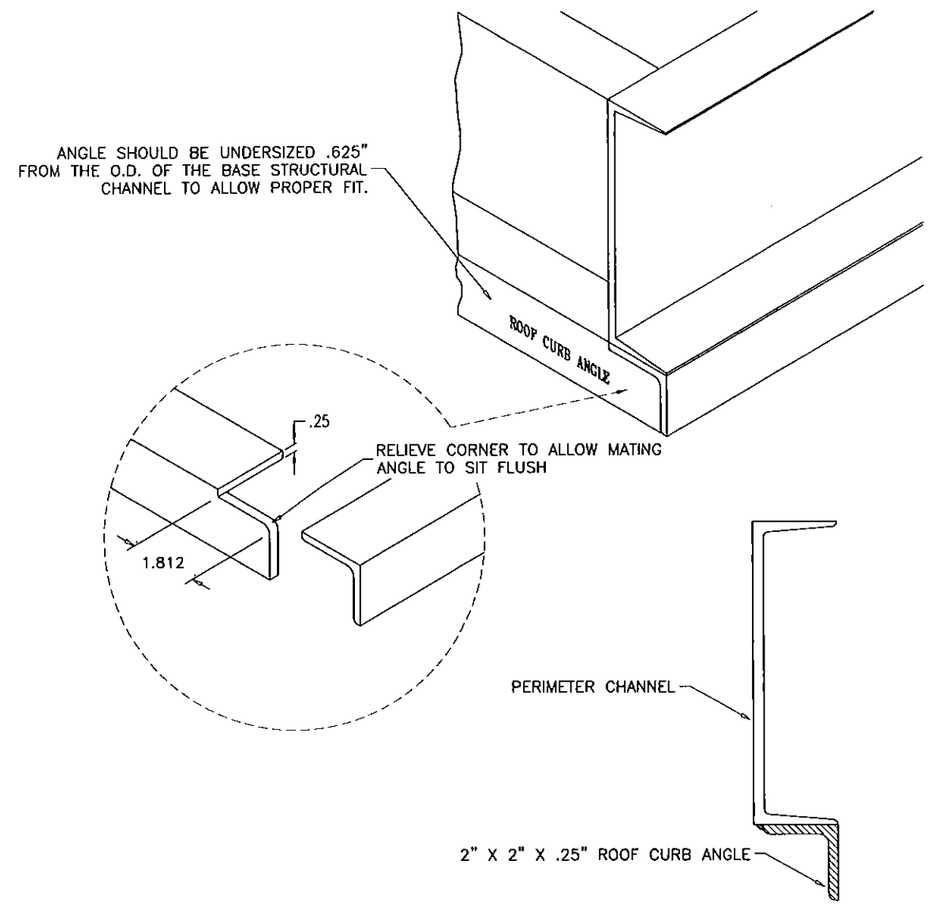

ROOF CURB ANGLE MOUNTING GUIDELINES AT BASE

Engr: JAVAD AHMAD
CIVIL
FLA. PE # 70592
C.A.N. 3588

AUG 29 2014

PRODUCT REVISED
as complying with the Florida Building Code
Acceptance No 14-0903.01
Expiration Date 12/26/2018
By
Miami Dade Product Control

AL-FAROOQ CORPORATION
ENGINEERS & PRODUCT DEVELOPMENT
1235 S.W. 87 AVE
MIAMI, FLORIDA 33174
TEL. (305) 264-8100 FAX. (305) 262-6978

COOLER\12-06YIC

SOLUTION AIR HANDLING UNIT

YORK/JOHNSON CONTROLS INC.
1499 EAST PHILADELPHIA STREET
YORK, PA. 17403
TEL. (717) 815-4218 FAX. (717) 815-4198

revisions:

no	date	by	description
A	04.16.13		NO CHANGE THIS SHEET
B	06.21.13		REV. PER RER COMMENTS
C	10.01.13		REV. PER RER COMMENTS
D	08.22.14		NO CHANGE THIS SHEET

date: 12-10-12
scale: -
dr. by: TARIQ
chk. by:

drawing no.
12-06

sheet 16 of 19

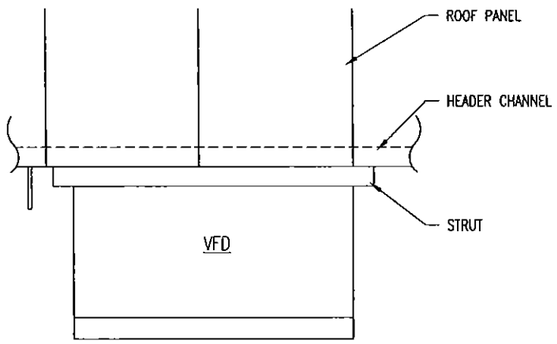

PLAN VIEW

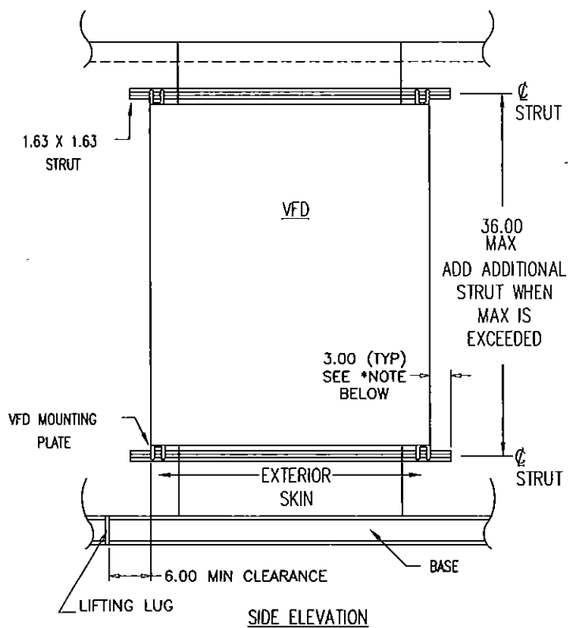

SIDE ELEVATION

*OVERHANG TO BE MAINTAINED IF POSSIBLE ON NEMA 1 BOXES.
*OVERHANG MUST BE MET OR EXCEEDED WHEN BOX IS NEMA 3R

DETAILING NOTES:

1. STRUTS FOR VFD'S WEIGHING MORE THAN 250lbs WILL BE MOUNTED WITH #12-16 TEK SCREW. DETERMINE FASTENER QTY PER STRUT USING THE FOLLOWING FORMULA: ROUND UP (WEIGHT OF PANEL DIVIDED BY 40), ADDITIONAL CHANNELS ADDED IN WALL PANEL BEHIND VFD'S.

2. STRUTS FOR VFD'S WEIGHING LESS THAN 250lbs WILL BE MOUNTED WITH #10-16 TEK SCREW. DETERMINE FASTENER QTY PER STRUT USING THE FOLLOWING FORMULA: ROUND UP (WEIGHT OF PANEL DIVIDED BY 30)

ASSEMBLY NOTES:

1. ELECTRIC DEPT. TO DRILL .313" DIAMETER HOLES IN THE UNISTRUT TO MATCH THE ABOVE SPACING FOR 250lbs AND OVER VFD'S.
2. CAULK PANEL SEAMS THAT WILL BE COVERED BY STRUT AND POWER PANEL.
3. ADD .13 X .75 GASKET TAPE TO BACK SIDE OF BOTH UPPER AND LOWER STRUTS. GASKET TAPE SHOULD BE CENTERED ON HOLE AND RUN THE FULL LENGTH OF THE STRUT.
4. FOR VFD'S 250lbs AND OVER, SCREW UPPER AND LOWER STRUTS TO WALL WITH #12-16 TEK SCREWS. FOR VFD UNDER 250lbs SCREW UPPER AND LOWER STRUT TO EXTERIOR USING #12-16 TEK SCREW.
5. DRILL TWO .4375 INCH DIAMETER HOLES FOR EACH PIECE OF STRUT IN THE BACK OF PANEL TO MATCH STRUTS LOCATIONS.
6. BOLT POWER PANEL/CONTROL PANEL TO STRUT USING .38 ELECTRIC SPRINGS NUTS AND .38 X 1.0 NC GRADE 2 HCS.
7. CAULKING STRUT IS NOT REQUIRED, BUT DRIVE SCREW HEADS SHOULD BE CAULKED ON OUTDOOR UNITS.

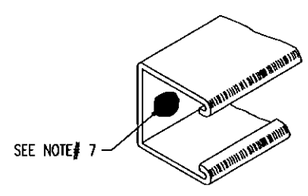

SURFACE MOUNT VFD MOUNTING DETAILS

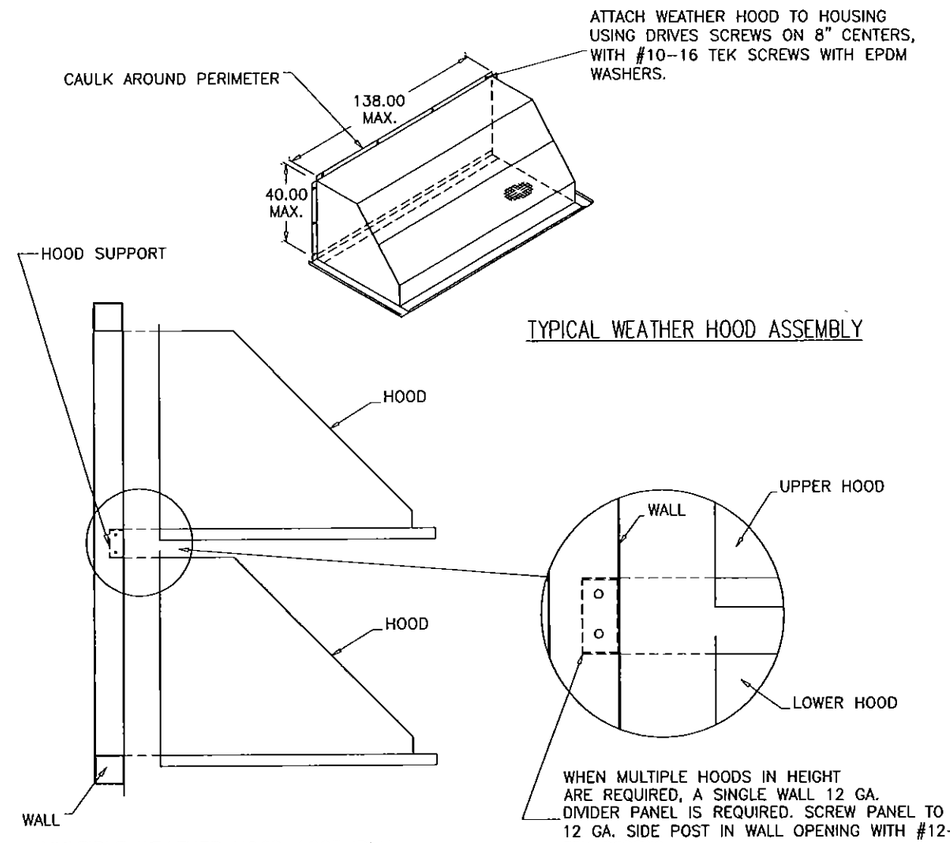

TYPICAL WEATHER HOOD ASSEMBLY

MULTIPLE WEATHER HOOD ASSEMBLY

40" MAX. HOOD HEIGHT WHEN SINGLE HOOD IS USED
LIMIT MAX. HEIGHT TO 20" WHEN MULTIPLE HOODS ARE USED.

SIZING GUIDELINES:

1. 60" WEATHER HOODS ARE AVAILABLE IN ANY HEIGHT FROM 12.00 INCHES TO 45.00 INCHES. ONLY BY SQ.
2. 90" WEATHER HOODS ARE AVAILABLE IN HEIGHTS UP TO 40".
3. WEATHER HOODS ARE AVAILABLE IN WHOLE NUMBER WIDTHS FROM 16.00 INCHES TO 138.00 INCHES.

MATERIAL:

1. STANDARD WEATHER HOOD MATERIAL IS 16GA PRE-PAINTED.

PRODUCT REVISED
as complying with the Florida
Building Code
Acceptance No 14-0903.01
Expiration Date 12/26/2018
By
Miami Dade Product Control

WEATHER HOOD SIZING & CONSTRUCTION GUIDELINES

Engr: JAVAID AHMAD
CIVIL
FLA. PE # 70592
C.A.N. 3538
AUG 29 2014

ALL DIMENSIONS SHOWN ARE IN INCHES.

AL-FAROOQ CORPORATION
ENGINEERS & PRODUCT DEVELOPMENT
1235 S.W. 87 AVE
MIAMI, FLORIDA 33174
TEL. (305) 264-8100 FAX. (305) 262-6978

COOLER\12-06YIC

SOLUTION AIR HANDLING UNIT

YORK/JOHNSON CONTROLS INC.
1499 EAST PHILADELPHIA STREET
YORK, PA. 17403
TEL. (717) 815-4198 FAX. (717) 815-4218

revisions:

no	date	by	description
A	04.16.13		NO CHANGE THIS SHEET
B	06.21.13		REV. PER RER COMMENTS
C	10.01.13		NO CHANGE THIS SHEET
D	08.22.14		NO CHANGE THIS SHEET

date: 12-10-12
scale: -
dr. by: TARIQ
chk. by:

drawing no.
12-06

LEVEL	ITEM	* PART NO. *=Stocked	TOTAL QTY.	SORT FIELD	DESCRIPTION	SHEET/REF.	QTY. ONE
	43		1	LATCH STD	ACCESS DOOR 24.00 X 72.00 L-O	7.02	1
	51	* 029 24600 000	1		PIANO HINGE 304SS		1
	44		1	EXTERIOR SKIN	22.81 X 70.60 X SHEET,AL,3003H14,.080		1
	47		2	FRAME EXTR LTCH	EXTRUSION,FRAME,TB,OUTSWING,3 X 73.25		2
	46		2	FRAME EXTR T/B	EXTRUSION,FRAME,TB,OUTSWING,3 X 25.37		2
	45		1	INTERIOR SKIN	21.46 X 69.23 X SHEET,GLV,G90,20GA		1
	61	* 021 30402 004	1	NUT	NUT,NYLOK,PLTD,.31-18		1
	54	391 20028 001	2	OS LATCH ASSY	3" OS LATCH ASSY PLT		2
	53	391 20030 001	1	OS LATCH ASSY	3" Pad Lock OS LATCH ASSY PLT		1
	48		1	PANEL EXTR BTM	EXTRUSION,TB,DOOR,3 X 22.28		1
	50		2	PANEL EXTR L/R	EXTRUSION,TB,DOOR,3 X 70.07		2
	49		1	PANEL EXTR TOP	EXTRUSION,TB,DOOR,3 X 22.28		1

* ACTUAL DOOR HEIGHT IS 0.25" LESS THAN NOMINAL DOOR HEIGHT *

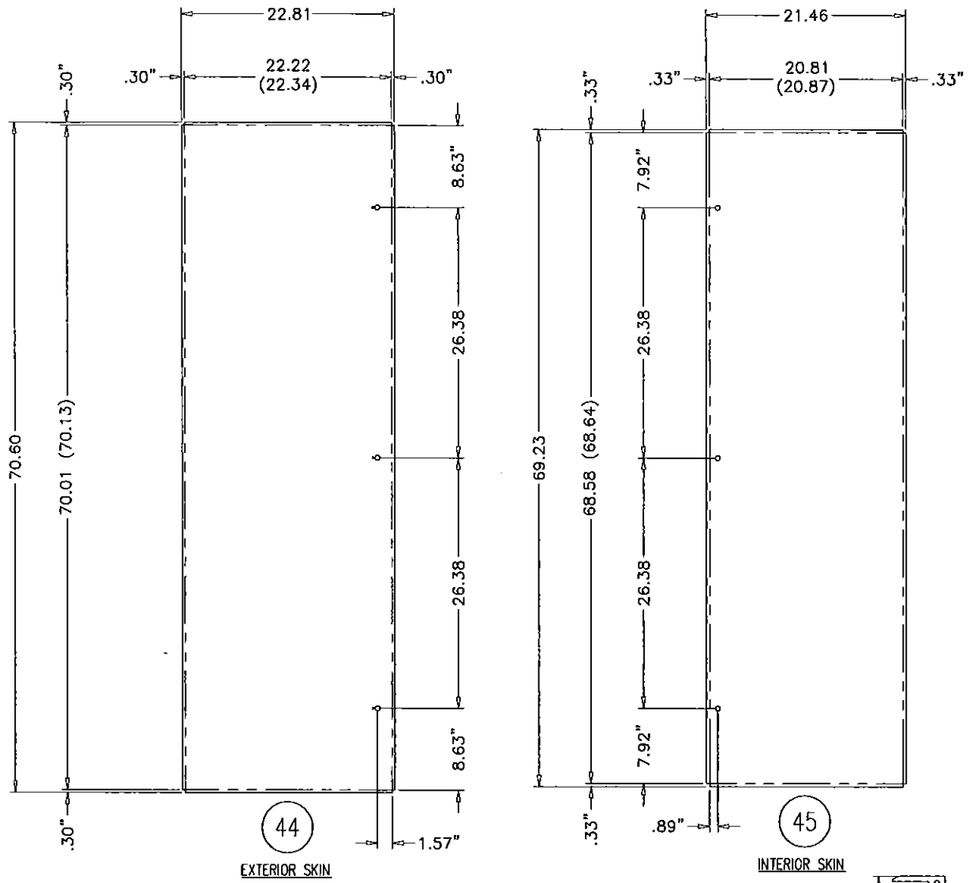

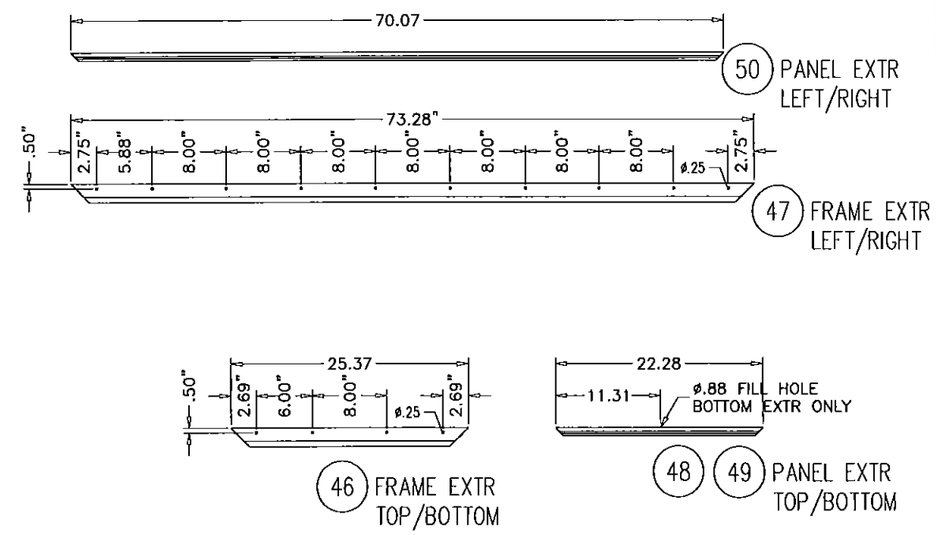

NOTES:
1. STAINLESS DOOR FASTENERS REQUIRED.
2. DOOR EXTRUSION LENGTH TOLERANCES ARE ±0.03.
3. USE 1/32" RADIUS DIE TO FORM PARTS.
4. FINISHED SKIN DIMENSIONS ARE IN (). TOLERANCE IS ±0.05.
5. DOOR SKINS ARE DRAWN BRAKES DOWN (PRE-PAINTED SIDE UP WHEN REQUIRED).
6. PAD-LOCKABLE DOOR HANDLES REQUIRED.
7. OUTSWING PRESSURIZED SAFETY LATCHES NOT REQUIRED.
8. HINGE LENGTH = 69.13.

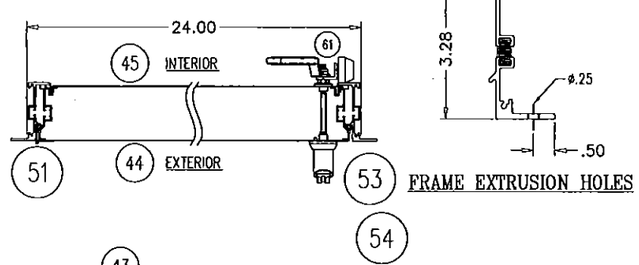

DOOR 43 ASSEMBLY (NOT TO SCALE)

.080 ALUMINUM EXTERIOR SKIN & 20 GA. (.034" MIN.) INTERIOR SKIN
24 X 72 ACCESS DOOR LEFT HAND
OUTSWING DOOR WITH (3) ROTATIONAL DOOR LATCHES AT 6-1/2" TO 9-1/2" FROM EACH CORNER AND AT MIDPOINT AND THERMAL BREAK ALUMINUM EXTRUDED Z FRAME

ALL DIMENSIONS SHOWN ARE IN INCHES.

Engr: JAVAD AHMAD
CIVIL
FLA. PE # 70592
C.A.N. 3538

AUG 29 2014

PRODUCT REVISED
as complying with the Florida Building Code
Acceptance No 14-0903.01
Expiration Date 12/26/2016
By
Miami Dade Product Control

AL-FAROOQ CORPORATION
ENGINEERS & PRODUCT DEVELOPMENT
1235 S.W. 87 AVE
MIAMI, FLORIDA 33174
TEL. (305) 264-8100 FAX. (305) 262-6978

COOLER\12-06YIC

SOLUTION AIR HANDLING UNIT

YORK/JOHNSON CONTROLS INC.
1499 EAST PHILADELPHIA STREET
YORK, PA. 17403
TEL. (717) 815-4218 FAX. (717) 815-4198

revisions:

no	date	by	description
A	04.16.13		Rem Items 219, 220, & 63 Chg Title to 0.8 Alum Ext Skin
B	06.21.13		REV. PER RER COMMENTS
C	10.01.13		REV. PER RER COMMENTS
D	08.22.14		NO CHANGE THIS SHEET

date: 12-10-12
scale: 3/4"=1'-0"
dr. by: TARIQ
chk. by:

drawing no.
12-06

LEVEL	ITEM	PART NO. *=Stocked	TOTAL QTY.	SORT FIELD	DESCRIPTION	SHEET/REF.	QTY. ONE
	43		1	LATCH STD	ACCESS DOOR 24.00 X 72.00 L-O	7.02	1
	51	* 029 24600 000	1		PIANO HINGE 304SS		1
	44		1	EXTERIOR SKIN	22.84 X 70.63 X SHEET,GLV,G90,20GA		1
	47		2	FRAME EXTR LTCH	EXTRUSION,FRAME,TB,OUTSWING,3 X 73.25		2
	46		2	FRAME EXTR T/B	EXTRUSION,FRAME,TB,OUTSWING,3 X 25.37		2
	45		1	INTERIOR SKIN	21.46 X 69.23 X SHEET,GLV,G90,20GA		1
	61	* 021 30402 004	1	NUT	NUT,NYLOK,PLTD,.31-18		1
	54	391 20028 001	2	OS LATCH ASSY	.3" OS LATCH ASSY PLT		2
	53	391 20030 001	1	OS LATCH ASSY	.3" Pad Lock OS LATCH ASSY PLT		1
	48		1	PANEL EXTR BTM	EXTRUSION,TB,DOOR,3 X 22.28		1
	50		2	PANEL EXTR L/R	EXTRUSION,TB,DOOR,3 X 70.07		2
	49		1	PANEL EXTR TOP	EXTRUSION,TB,DOOR,3 X 22.28		1

* ACTUAL DOOR HEIGHT IS 0.25" LESS THAN NOMINAL DOOR HEIGHT *

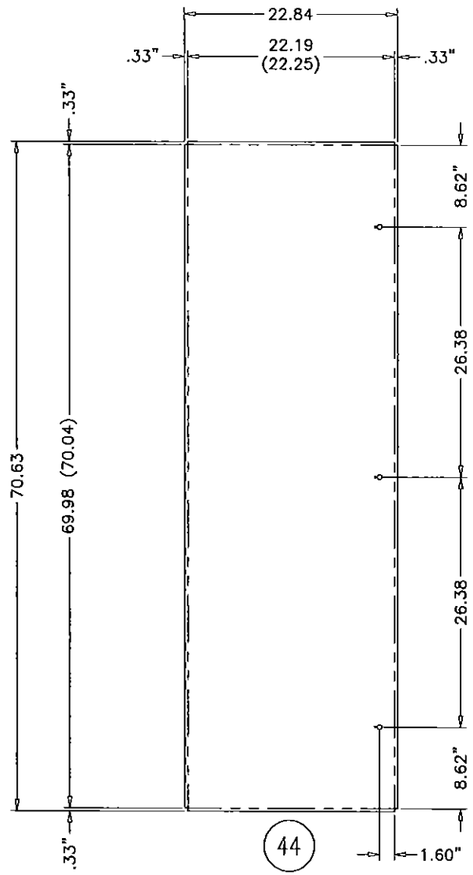

44 EXTERIOR SKIN

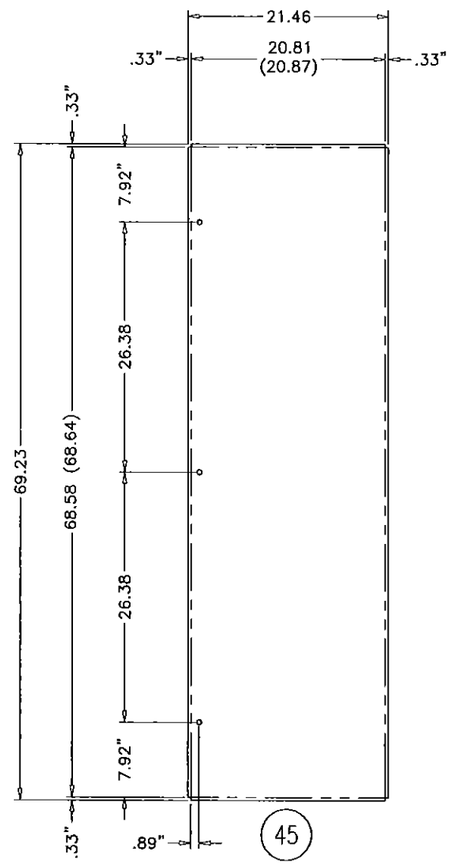

45 INTERIOR SKIN

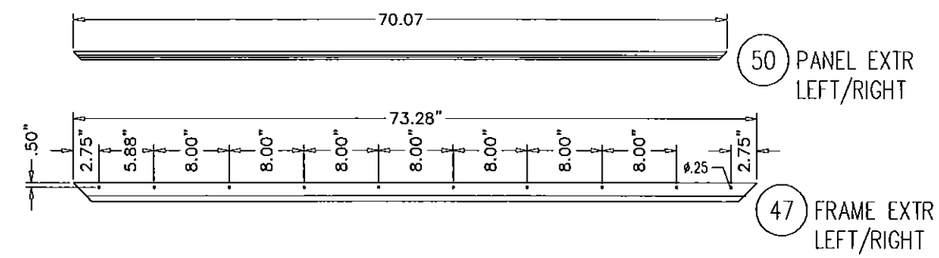

50 PANEL EXTR LEFT/RIGHT

47 FRAME EXTR LEFT/RIGHT

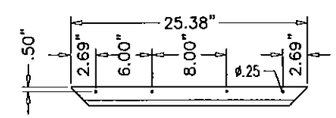

46 FRAME EXTR TOP/BOTTOM

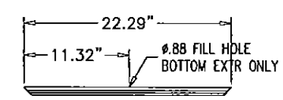

48 49 PANEL EXTR TOP/BOTTOM

NOTES:
1. STAINLESS DOOR FASTENERS REQUIRED.
2. DOOR EXTRUSION LENGTH TOLERANCES ARE ±0.03.
3. USE 1/32" RADIUS DIE TO FORM PARTS.
4. FINISHED SKIN DIMENSIONS ARE IN (). TOLERANCE IS ±0.05.
5. DOOR SKINS ARE DRAWN BRAKES DOWN (PRE-PAINTED SIDE UP WHEN REQUIRED).
6. PAD-LOCKABLE DOOR HANDLES REQUIRED.
7. OUTSWING PRESSURIZED SAFETY LATCHES REQUIRED.
8. HINGE LENGTH = 69.04.

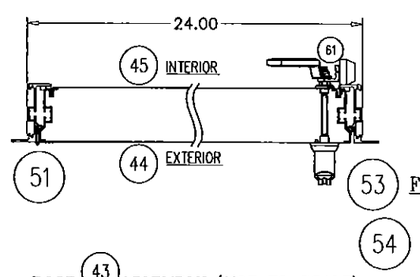

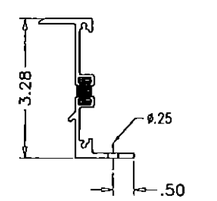

53 FRAME EXTRUSION HOLES

DOOR 43 ASSEMBLY (NOT TO SCALE)

20 GA. (.034" MIN.) STEEL EXTERIOR & INTERIOR SKIN
24 X 72 ACCESS DOOR LEFT HAND
OUTSWING DOOR WITH (3) ROTATIONAL DOOR LATCHES AT 6-1/2" TO 9-1/2" FROM EACH CORNER AND AT MIDPOINT AND THERMAL BREAK ALUMINUM EXTRUDED Z FRAME

ALL DIMENSIONS SHOWN ARE IN INCHES.

PRODUCT REVISED
as complying with the Florida Building Code
Acceptance No 14-0903.01
Expiration Date 12/26/2018
By
Miami Dade Product Control

Engr: JAVAD AHMAD
CIVIL
FLA. PE # 70592
C.A.N. 3538
AUG 29 2014

AL-FAROOQ CORPORATION
ENGINEERS & PRODUCT DEVELOPMENT
1235 S.W. 87 AVE
MIAMI, FLORIDA 33174
TEL. (305) 264-8100 FAX. (305) 262-6978

COOLER\12-06YIC

SOLUTION AIR HANDLING UNIT

YORK/JOHNSON CONTROLS INC.
1499 EAST PHILADELPHIA STREET
YORK, PA. 17403
TEL. (717) 815-4218 FAX. (717) 815-4198

revisions:

no	date	by	description
A	04.16.13		Rev Item Numbers Chg Title to 20 GA. Stl Ext Skin
B	06.21.13		REV. PER RER COMMENTS
C	10.01.13		REV. PER RER COMMENTS
D	08.22.14		NO CHANGE THIS SHEET

date: 12-10-12
scale: 3/4"=1'-0"
dr. by: TARIQ
chk. by:

drawing no.
12-06