MIAMI-DADE COUNTY
DEPARTMENT OF REGULATORY AND ECONOMIC RESOURCES (RER)
BOARD AND CODE ADMINISTRATION DIVISION

MIAMI-DADE COUNTY
PRODUCT CONTROL SECTION
11805 SW 26 Street, Room 208
T (786) 315-2590 F (786) 315-2599
www.miamidade.gov/economy

NOTICE OF ACCEPTANCE (NOA)

CGI Windows & Doors
10100 NW 25th Street
Miami, FL 33172

SCOPE:

This NOA is being issued under the applicable rules and regulations governing the use of construction materials. The documentation submitted has been reviewed and accepted by Miami-Dade County RER - Product Control Section to be used in Miami Dade County and other areas where allowed by the Authority Having Jurisdiction (AHJ).

This NOA shall not be valid after the expiration date stated below. The Miami-Dade County Product Control Section (In Miami Dade County) and/or the AHJ (in areas other than Miami Dade County) reserve the right to have this product or material tested for quality assurance purposes. If this product or material fails to perform in the accepted manner, the manufacturer will incur the expense of such testing and the AHJ may immediately revoke, modify, or suspend the use of such product or material within their jurisdiction. RER reserves the right to revoke this acceptance, if it is determined by Miami-Dade County Product Control Section that this product or material fails to meet the requirements of the applicable building code.

This product is approved as described herein, and has been designed to comply with the Florida Building Code, including the High Velocity Hurricane Zone.

DESCRIPTION: Series "238" Aluminum Fixed Window – L.M.I.

APPROVAL DOCUMENT: Drawing No. **W99-10**, titled "Series-238 Aluminum Fixed Window (L.M.I.)", sheets 1 through 11 of 11, dated 02/19/99, with revision I dated 08/18/14, prepared by Al-Farooq Corporation, signed and sealed by Javad Ahmad, P.E., bearing the Miami-Dade County Product Control Revision stamp with the Notice of Acceptance number and expiration date by the Miami–Dade County Product Control Section.

MISSILE IMPACT RATING: Large and Small Missile Impact Resistant

LABELING: Each unit shall bear a permanent label with the manufacturer's name or logo, city, state, model/series, and following statement: "Miami-Dade County Product Control Approved", unless otherwise noted herein.

RENEWAL of this NOA shall be considered after a renewal application has been filed and there has been no change in the applicable building code negatively affecting the performance of this product.

TERMINATION of this NOA will occur after the expiration date or if there has been a revision or change in the materials, use, and/or manufacture of the product or process. Misuse of this NOA as an endorsement of any product, for sales, advertising or any other purposes shall automatically terminate this NOA. Failure to comply with any section of this NOA shall be cause for termination and removal of NOA.

ADVERTISEMENT: The NOA number preceded by the words Miami-Dade County, Florida, and followed by the expiration date may be displayed in advertising literature. If any portion of the NOA is displayed, then it shall be done in its entirety.

INSPECTION: A copy of this entire NOA shall be provided to the user by the manufacturer or its distributors and shall be available for inspection at the job site at the request of the Building Official.

This NOA **revises NOA# 13-0606.06** and consists of this page 1 and evidence pages E-1, E-2 and E-3, as well as approval document mentioned above.

The submitted documentation was reviewed by **Manuel Perez, P.E.**

MIAMI-DADE COUNTY APPROVED

12/18/14

NOTICE OF ACCEPTANCE: EVIDENCE SUBMITTED

A. DRAWINGS

1. Manufacturer's die drawings and sections.
2. Drawing No. **W99–10**, titled "Series-238 Alum. Fixed Window (L.M.I.)", sheets 1 through 11 of 11, dated 02/19/99, with revision I dated 08/18/14, prepared by Al–Farooq Corporation, signed and sealed by Javad Ahmad, P.E.

B. TESTS

1. Test reports on: 1) Large Missile Impact Test per FBC, TAS 201-94
   2) Cyclic Wind Pressure Loading per FBC, TAS 203-94
   along with marked-up drawings and installation diagram of aluminum fixed, casement and project-out windows, prepared by Hurricane Test Laboratory, Inc., Test Reports No. **HETI-08-2143**, **HETI-08-2144**, **HETI-07-4298** and **HETI-07-4287**, dated 06/27/08 and 07/17/08, all signed and sealed by Candido F. Font, P.E.
   (Submitted under NOA No. 08-1114.06)
2. Test reports on: 1) Air Infiltration Test, per FBC, TAS 202-94
   2) Uniform Static Air Pressure Test, Loading per FBC TAS 202-94
   3) Water Resistance Test, per FBC, TAS 202-94
   4) Forced Entry Test, per FBC 2411.3.2.1, and TAS 202–94
   5) Large Missile Impact Test per FBC, TAS 201-94
   6) Cyclic Wind Pressure Loading per FBC, TAS 203-94
   along with marked–up drawings and installation diagram of series 238 aluminum casement, project–out and fixed windows, prepared by Hurricane Test Laboratory, Inc., Test Reports No. **HTL–0080–0301–07** and **HTL–0080–0905–07**, dated from 10/10/06 to 08/28/07, all signed and sealed by Vinu J. Abraham, P.E.
   (Submitted under NOA's No. 08-1114.06 and 06-0928.03)
3. Test reports on: 1) Large Missile Impact Test per SFBC, PA 201–94,
   2) Cyclic Wind Pressure Loading per FBC, TAS 203-94
   along with marked-up drawings and installation diagram of aluminum casement, project–out and fixed windows, prepared by American Test Lab of South Florida, Inc., Test Report No. **ATL–1209.01–94**, dated 02/20/95, signed and sealed by Gerard B. Sullivan, P.E.
   (Submitted under NOA No. 96–0717.04)

Manuel Perez

Manuel Perez, P.E.
Product Control Examiner
NOA No. 14-0903.06
Expiration Date: October 26, 2018
Approval Date: December 24, 2014

NOTICE OF ACCEPTANCE: EVIDENCE SUBMITTED

B. TESTS (CONTINUED)

4. Test reports on: 1) Air Infiltration Test, per SFBC, PA 201–94
   2) Uniform Static Air Pressure Test, Loading per FBC TAS 202-94
   3) Water Resistance Test, per FBC, TAS 202-94
   4) Large Missile Impact Test per FBC, TAS 201-94
   5) Cyclic Wind Pressure Loading per FBC, TAS 203-94

   along with marked–up drawings and installation diagram of a series 238 aluminum fixed window, prepared by Hurricane Test Laboratory, Inc., Test Reports No. **HTL-0080-0303-96, HTL-0080-1107-98, HTL-0080-1127-98, HTL-0080-0606-99, HTL-0080-1020-99** and **HTL-0080-0203-99**, dated 03/06/96, 09/08/96, 11/10/98, 12/23/98 and 02/05-15/99, 06/07/99 and 10/28/99, all signed and sealed by Timothy S. Marshall, P.E.
   (Submitted under NOA's No. 96-0417.03, 98-0709.05, 99-0329.01 and 01-0918.01)

B. CALCULATIONS

1. Anchor verification calculations and structural analysis, complying with **FBC-5th Edition (2014)**, dated 08/05/14, prepared by Al-Farooq Corporation, signed and sealed by Javad Ahmad, P.E.
2. Glazing complies with **ASTM E1300–09**

D. QUALITY ASSURANCE

1. Miami–Dade Department of Regulatory and Economic Resources (RER).

E. MATERIAL CERTIFICATIONS

1. Notice of Acceptance No. **11–0624.02** issued to **E.I. DuPont DeNemours & Co.**, Inc. for their "**DuPont SentryGlas® Interlayer**" dated 08/25/11, expiring on 01/14/17.
2. Notice of Acceptance No. **14–0423.17** issued to **Eastman Chemical Company (MA)** for their "**Saflex Clear and Color Glass Interlayers**" dated 0619/14, expiring on 05/21/16.
3. Notice of Acceptance No. **14–0423.15** issued to **Eastman Chemical Company (MA)** for their "**Saflex CP – Saflex and Saflex HP Composite Glass Interlayers with PET Core**" dated 06/19/14, expiring on 12/11/18.

Manuel Perez

Manuel Perez, P.E.
Product Control Examiner
NOA No. 14-0903.06
Expiration Date: October 26, 2018
Approval Date: December 24, 2014

NOTICE OF ACCEPTANCE: EVIDENCE SUBMITTED

F. STATEMENTS

1. Statement letter of conformance, complying with **FBC-5th Edition (2014)**, and of no financial interest, dated August 6, 2014, issued by Al-Farooq Corporation, signed and sealed by Javad Ahmad, P.E.
2. Laboratory compliance letter for Test Report No. **FTL-4673**, issued by Fenestration Testing Laboratory, Inc., dated 04/07/06, signed and sealed by Edmundo J. Largaespada, P.E.
   (Submitted under NOA No. 08-0206.03)
3. Laboratory compliance letters for Test Reports No. **HTL-0080–0301–07**, **HTL-0080-0905-06** and **HTL-0080-0905-07**, issued by Hurricane Test Laboratory, Inc., dated 08/08/08 and 10/12/06, all signed and sealed by Vinu J. Abraham, P.E.
   (Submitted under NOA's No. 08-1114.06 and 06-0928.03)
4. Laboratory compliance letters for Test Report No. **ATL–1209.01–94**, issued by American Test Lab of South Florida, Inc., dated 02/20/95, signed and sealed by Gerard B. Sullivan, P.E.
   (Submitted under NOA No. 96-0717.04)
5. Laboratory compliance letters for Test Reports No. **HTL-0080-0303-96, HTL-0080-0303-96, HTL-0080-1107-98, HTL-0080-1127-98, HTL-0080-0606-99** and **HTL-0080-0203-99**, issued by Hurricane Test Laboratory, Inc., dated 03/06/96, 09/08/96, 12/23/98 and 11/29/99, all signed and sealed by Timothy S. Marshall, P.E.
   (Submitted under NOA's No. 96-0417.03, 98-0709.05, 99-0329.01 and 01-0918.01)

G. OTHERS

1. Notice of Acceptance No. **13–0606.06**, issued to CGI Windows & Doors for their "Series-238 Aluminum Fixed Window – L.M.I.", approved on 08/15/13 and expiring on 10/26/18.

Manuel Perez

Manuel Perez, P.E.
Product Control Examiner
NOA No. 14-0903.06
Expiration Date: October 26, 2018
Approval Date: December 24, 2014

GENERAL WINDOW SECTIONS
FLANGE FRAME

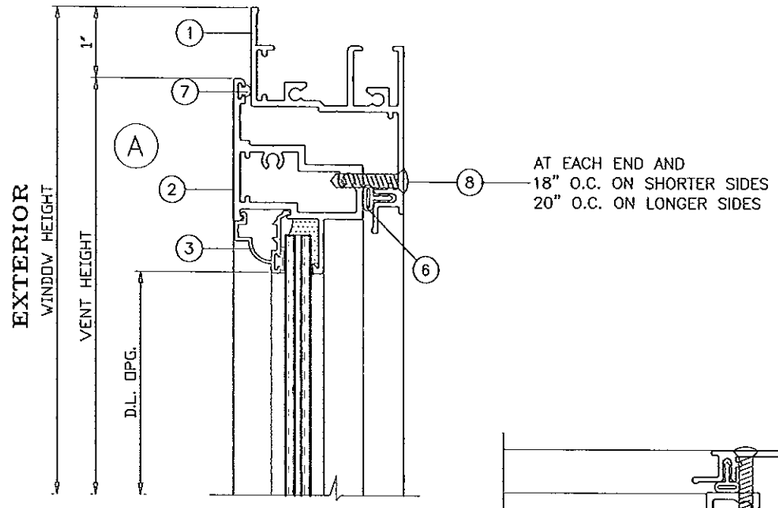

FOR GLASS TYPES
REFER TO
SHEETS 4 THRU 6

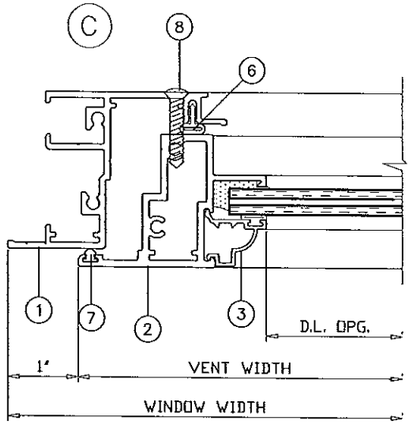

EXTERIOR

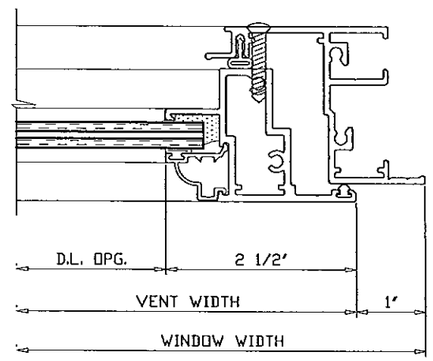

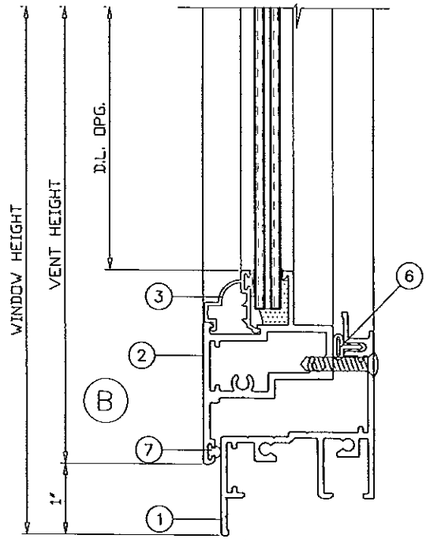

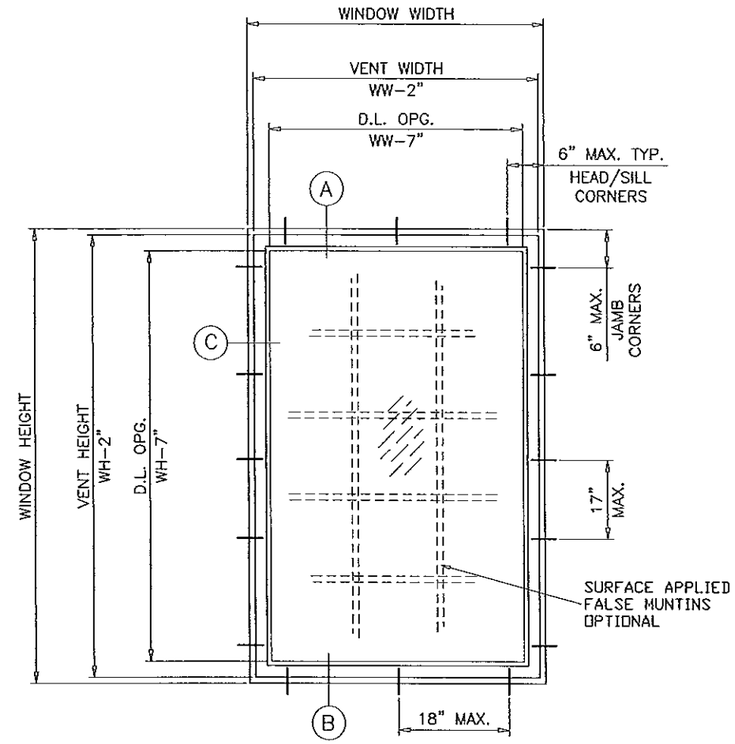

TYPICAL ELEVATION
(FLANGE FRAME)

MAX. ANCHOR SPACING TO BE AS FOLLOWS
17" O.C. ON LONGER SIDES
18" O.C. ON SHORTER SIDES

FOR MULLION/MULTIPLE UNITS, REFER TO
SEPARATE CGI MULLION N.O.A.

THESE WINDOWS ARE RATED FOR LARGE MISSILE IMPACT.
SHUTTERS ARE NOT REQUIRED.

INSTRUCTIONS:

USE CHARTS AS FOLLOWS.

STEP 1 DETERMINE DESIGN WIND LOAD REQUIREMENT BASED ON WIND VELOCITY, BLDG. HEIGHT, WIND ZONE USING APPLICABLE ASCE 7 STANDARD.

STEP 2 SEE CHARTS ON SHEETS 4 THRU 6 FOR DESIGN LOAD CAPACITY OF DESIRED GLASS SIZE/TYPE.

STEP 3 USING CHART ON SHEET 9 SELECT ANCHOR OPTION WITH DESIGN RATING MORE THAN DESIGN LOAD SPECIFIED IN STEP 1 ABOVE.

STEP 4 IF ALUMINUM BUCK SYSTEM IS USED USE CHART ON SHEETS 10 & 11 TO DETERMINE CAPACITY.

STEP 5 THE LOWEST VALUE RESULTING FROM STEPS 2, 3 AND 4 SHALL APPLY TO ENTIRE SYSTEM.

NOTES:

THIS PRODUCT HAS BEEN DESIGNED AND TESTED TO COMPLY WITH THE REQUIREMENTS OF THE FLORIDA BUILDING CODE INCLUDING HIGH VELOCITY HURRICANE ZONE (HVHZ).

WOOD BUCKS BY OTHERS, MUST BE ANCHORED PROPERLY TO TRANSFER LOADS TO THE STRUCTURE.

ANCHORS SHALL BE AS LISTED, SPACED AS SHOWN ON DETAILS, ANCHORS EMBEDMENT TO BASE MATERIAL SHALL BE BEYOND WALL DRESSING OR STUCCO.

ANCHORING OR LOADING CONDITIONS NOT SHOWN IN THESE DETAILS ARE NOT PART OF THIS APPROVAL.

A LOAD DURATION INCREASE IS USED IN DESIGN OF ANCHORS INTO WOOD ONLY.

MATERIALS INCLUDING BUT NOT LIMITED TO STEEL/METAL SCREWS, THAT COME INTO CONTACT WITH OTHER DISSIMILAR MATERIALS SHALL MEET THE REQUIREMENTS OF THE FLORIDA BLDG. CODE.

Engr: JAVAD AHMAD
CIVIL
FLA. PE # 70592
C.A.N. 3538
AUG 20 2014

PRODUCT REVISED
as complying with the Florida
Building Code
Acceptance No 14-0903.06
Expiration Date Oct. 16, 2018
By Manuel Perez
Miami Dade Product Control

AL-FAROOQ CORPORATION
ENGINEERS & PRODUCT DEVELOPMENT
1235 S.W. 87 AVE
MIAMI, FLORIDA 33174
TEL. (305) 264-8100 FAX. (305) 262-6978

COMP-ANL\W99-10CGI

SERIES-238 ALUMINUM FIXED WINDOW (L.M.I.)

CGI WINDOWS & DOORS
10100 N.W. 25TH STREET
DORAL, FL. 33172
TEL. (305) 593-6590 FAX. (305) 593-6592

revisions:

no	date	by	description
F	10.07.08		GENERAL REV.
G	11.23.11		UPDATED TO 2010 FBC
H	07.31.13		NO CHANGE THIS SHEET
I	08.18.14		UPDATED TO 2014 FBC

date: 02-19-99
scale: 1/2" = 1"
dr. by: HAMID
chk. by:

drawing no.
W99-10

GENERAL WINDOW SECTIONS
EQUAL LEG FRAME

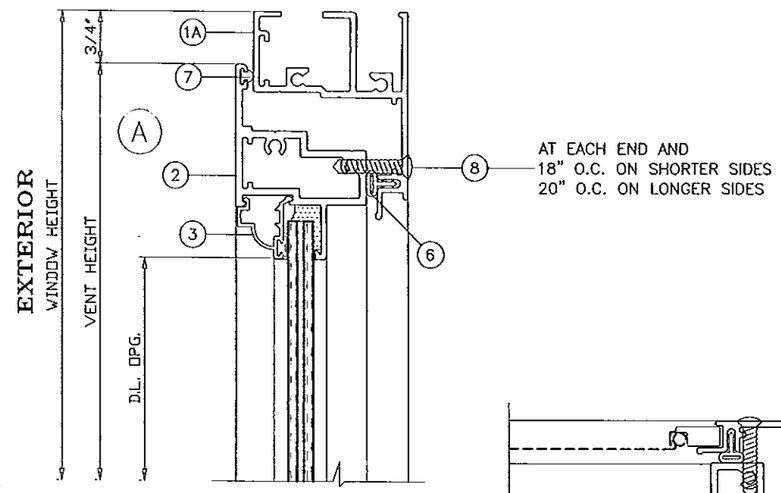

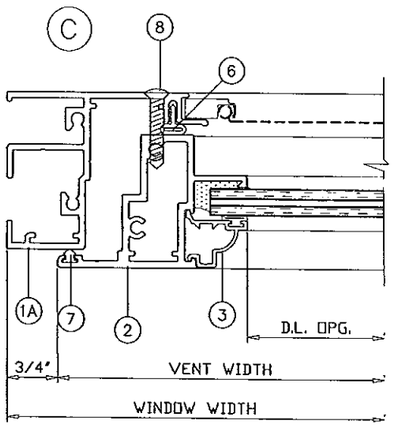

EXTERIOR

FOR GLASS TYPES,
REFER TO
SHEETS 4 THRU 6

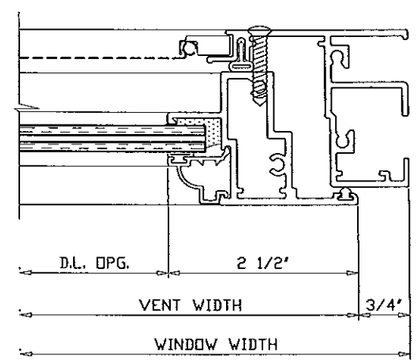

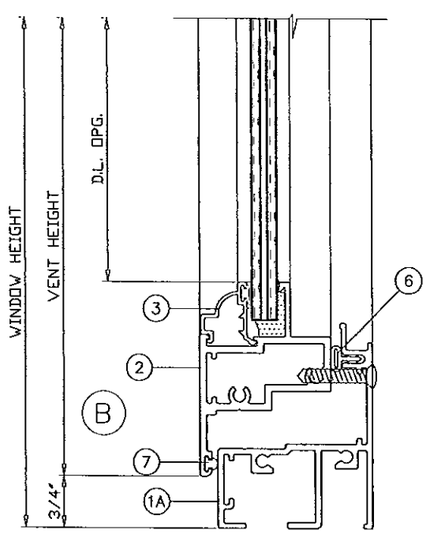

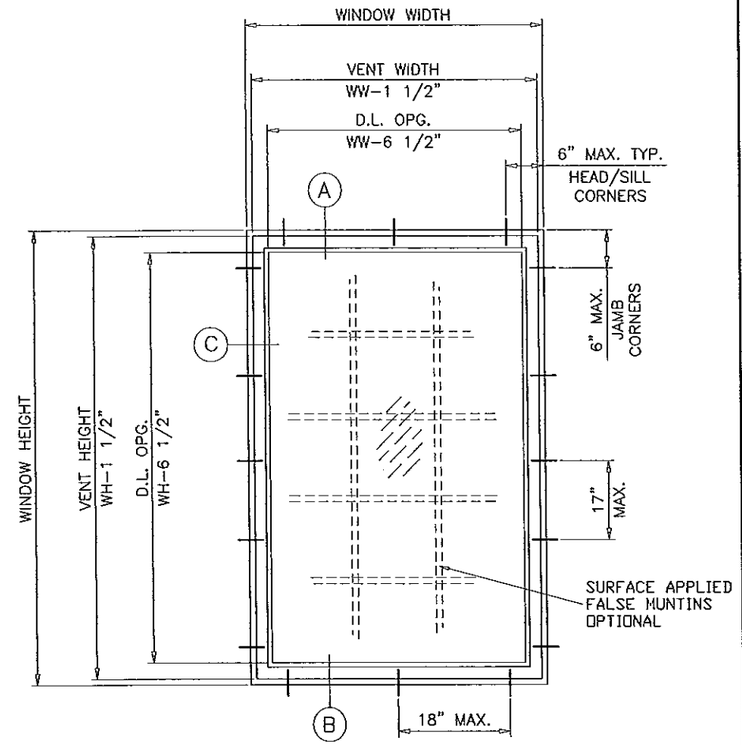

TYPICAL ELEVATION
(EQUAL LEG FRAME)

MAX. ANCHOR SPACING TO BE AS FOLLOWS
17" O.C. ON LONGER SIDES
18" O.C. ON SHORTER SIDES

Engr: JAVAD AHMAD
CIVIL
FLA. PE # 70592
C.A.N. 3538

AUG 20 2014

PRODUCT REVISED
as complying with the Florida
Building Code
Acceptance No 14-0903.06
Expiration Date Oct. 26, 2018
By Manuel Perez
Miami-Dade Product Control

AL-FAROOQ CORPORATION
ENGINEERS & PRODUCT DEVELOPMENT
1235 S.W. 87 AVE
MIAMI, FLORIDA 33174
TEL. (305) 264-8100 FAX. (305) 262-6978
COMP-ANL\W99-10CGI

SERIES-238 ALUMINUM FIXED WINDOW (L.M.I.)

CGI WINDOWS & DOORS
10100 N.W. 25TH STREET
DORAL, FL. 33172
TEL. (305) 593-6590 FAX. (305) 593-6592

revisions:

no	date	by	description
F	10.07.08		GENERAL REV.
G	11.23.11		NO CHANGE THIS SHEET
H	07.31.13		NO CHANGE THIS SHEET
I	08.18.14		UPDATED TO 2014 FBC

date: 02-19-99
scale: 1/2" = 1"
dr. by: HAMID
chk. by:

drawing no.
W99-10

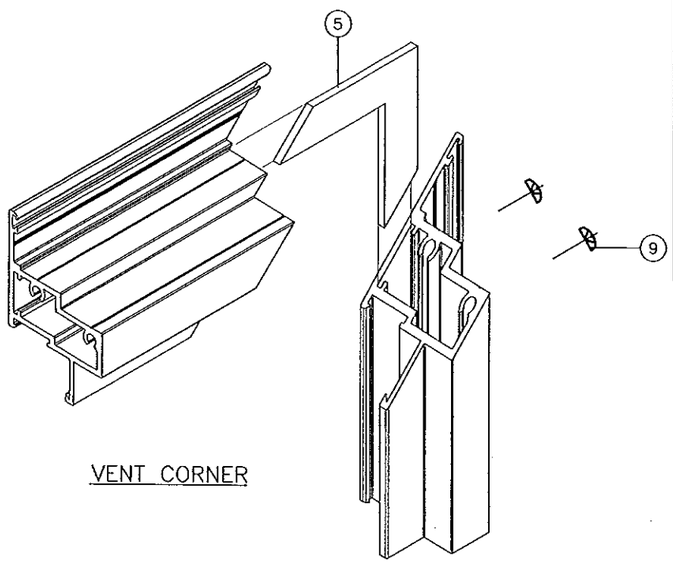

VENT CORNER

ALL FRAME AND VENT CORNERS TO BE SEALED WITH GE SILPRUF OR EQUIV.

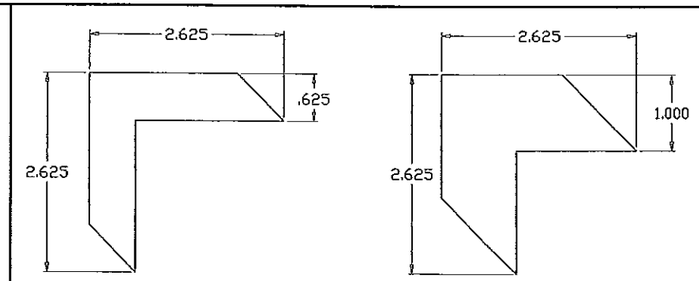

CORNER KEY
.060 THICK ST. STEEL

CORNER KEY
.062 THICK ALUMINUM

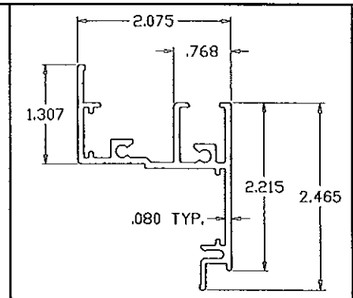

FLANGE FRAME

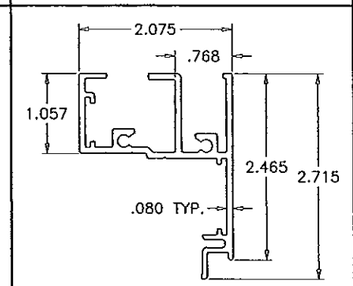

EQUAL LEG FRAME

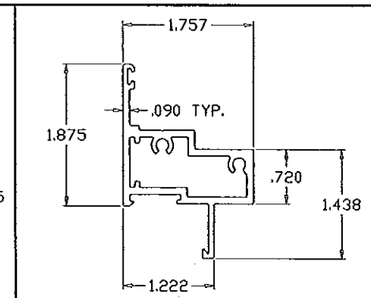

VENT (5/16" LAM. GLASS)

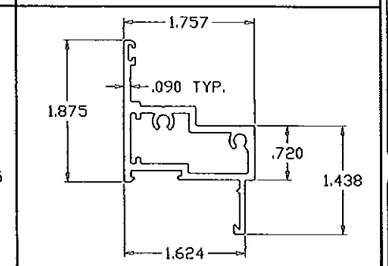

VENT (INSUL. LAM. GLASS)

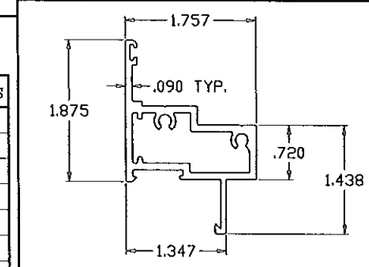

VENT (7/16" LAM. GLASS)

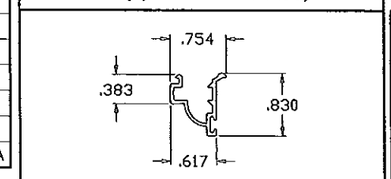

CGI-375: OGEE GLAZING STOP

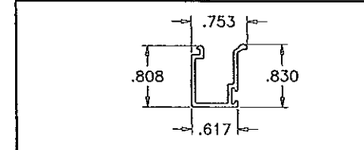

CGI-396: SQUARE GLAZING STOP

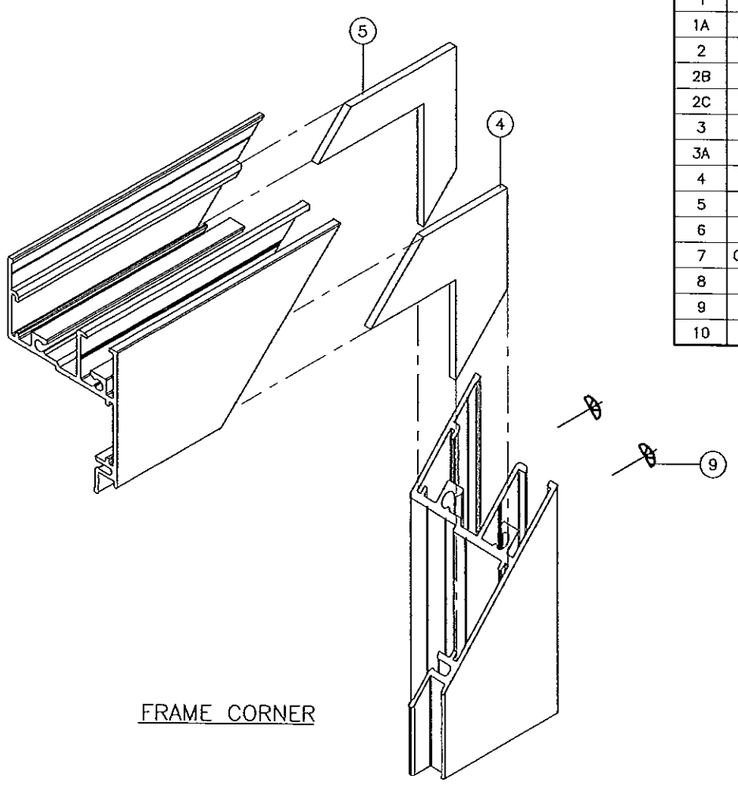

FRAME CORNER

ITEM	PART #	QUANTITY	DESCRIPTION	MATERIAL	MANF./SUPPLIER/REMARKS
1	CGI-373	4	FLANGE FRAME	6063-T6	INDALEX OR EQUIV.
1A	CGI-397	4	EQUAL LEG FRAME	6063-T6	INDALEX OR EQUIV.
2	CGI-378	4	VENT (5/16" LAM. GLASS)	6063-T6	INDALEX OR EQUIV.
2B	CGI-381	4	VENT (INSUL. LAM. GLASS)	6063-T6	INDALEX OR EQUIV.
2C	CGI-385	4	VENT (7/16" LAM. GLASS)	6063-T6	INDALEX OR EQUIV.
3	CGI-375	4	OGEE GLAZING BEAD	6063-T5	INDALEX OR EQUIV.
3A	CGI-396	4	SQUARE GLAZING BEAD	6063-T5	INDALEX OR EQUIV.
4	–	4	.060 THICK CORNER KEY	ALUMINUM	–
5	–	8	.060 THICK CORNER KEY	ST. STEEL	–
6	AP-425	AS REQD.	FRAME WEATHERSTRIPPING	–	ULTRAFAB/SCHLEGEL
7	Q200 X190	AS REQD.	VENT WEATHERSTRIPPING	–	SCHLEGEL Q-LON
8	–	AS REQD.	VENT SCREWS @ 20" O.C. LONGER SIDES, 18" O.C. SHORTER SIDES	–	#10 X 1" SS SMS
9	–	2/ CORNER	FRAME AND VENT ASSEMBLY SCREWS	–	#10 X 1-1/4" SS SMS
10	–	2/ LITE	SETTING BLOCKS	EPDM	DUROMETER 85±5 SHORE A

Engr: JAVAD AHMAD
CIVIL
FLA. PE # 70592
C.A.N. 3538

AUG 20 2014

PRODUCT REVISED
as complying with the Florida
Building Code
Acceptance No 14-0903.06
Expiration Date Oct 26, 2018
By Manuel Suarez
Miami Dade Product Control

AL-FAROOQ CORPORATION
ENGINEERS & PRODUCT DEVELOPMENT
1235 S.W. 87 AVE
MIAMI, FLORIDA 33174
TEL. (305) 264-8100 FAX. (305) 262-6978
COMP-ANL\W99-10CGI

SERIES-238 ALUMINUM FIXED WINDOW (L.M.I.)

CGI WINDOWS & DOORS
10100 N.W. 25TH STREET
DORAL, FL. 33172
TEL. (305) 593-6590 FAX. (305) 593-6592

revisions:

no	date	by	description
F	10.07.08		GENERAL REV.
G	11.23.11		NO CHANGE THIS SHEET
H	07.31.13		NO CHANGE THIS SHEET
I	08.18.14		UPDATED TO 2014 FBC

date: 02-19-99
scale: 1/2" = 1"
dr. by: HAMID
chk. by:

drawing no.
W99-10

sheet 3 of 11

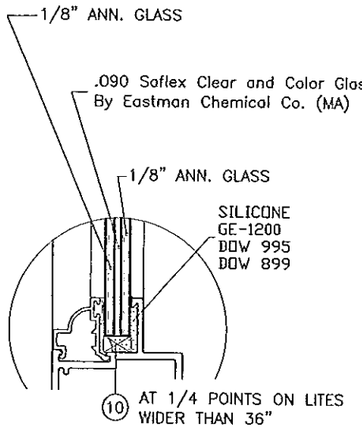

5/16" NOMINAL
GLASS TYPE '2'

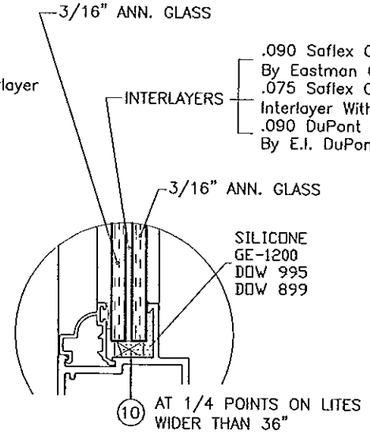

7/16" NOMINAL
GLASS TYPE '3'

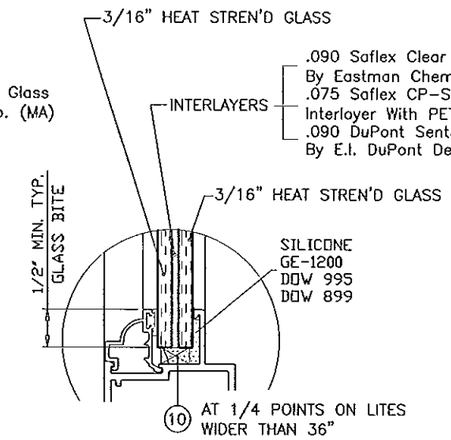

7/16" NOMINAL
GLASS TYPE '6'

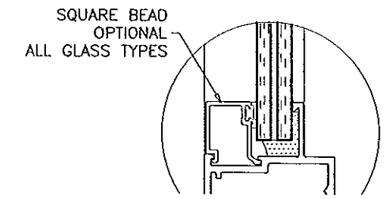

PERFORMANCE VALUES OF IMPACT RESISTANT WINDOWS

REFER TO SHEETS 7 THRU 11 FOR INSTALLATION DETAILS

WINDOW DIMS.		GLASS TYPE '2'		GLASS TYPE '3'		GLASS TYPE '6'	
WIDTH	HEIGHT	EXT. (+)	INT. (−)	EXT. (+)	INT. (−)	EXT. (+)	INT. (−)
19-1/8"	26"	110.0	195.0	110.0	195.0	110.0	195.0
26-1/2"		110.0	166.2	110.0	195.0	110.0	195.0
37"		110.0	166.2	110.0	172.5	110.0	195.0
53-1/8"		110.0	120.0	110.0	148.2	110.0	195.0
19-1/8"	38-3/8"	110.0	195.0	110.0	195.0	110.0	195.0
26-1/2"		110.0	163.0	110.0	167.7	110.0	195.0
37"		110.0	116.8	110.0	151.9	101.8	180.5
53-1/8"		84.1	84.1	108.8	118.7	108.8	118.7
19-1/8"	50-5/8"	110.0	185.7	110.0	187.6	110.0	195.0
26-1/2"		110.0	131.2	110.0	148.7	110.0	195.0
37"		95.0	95.0	110.0	120.0	110.0	120.0
53-1/8"		67.9	67.9	85.3	85.3	85.3	85.3
19-1/8"	63"	110.0	177.5	110.0	179.4	110.0	195.0
26-1/2"		102.7	102.7	110.0	120.0	110.0	120.0
37"		70.5	70.5	102.1	111.3	102.1	111.3
53-1/8"		57.7	57.7	81.3	81.3	81.3	81.3
19-1/8"	74-1/4"	110.0	120.0	110.0	174.6	110.0	195.0
26-1/2"		89.8	89.8	110.0	120.0	110.0	120.0
37"		56.9	56.9	90.0	90.0	90.0	90.0
53-1/8"		–	–	–	–	70.0	70.0

Engr: JAVAD AHMAD
CIVIL
FLA. PE # 70592
C.A.N. 3538

AUG 20 2014

PRODUCT REVISED
as complying with the Florida
Building Code
Acceptance No 14-0903.06
Expiration Date Oct. 26, 2018
By Manuel Perez
Miami Dade Product Control

AL-FAROOQ CORPORATION
ENGINEERS & PRODUCT DEVELOPMENT
1235 S.W. 87 AVE
MIAMI, FLORIDA 33174
TEL. (305) 264-8100 FAX. (305) 262-6978

COMP-ANL\W99-10CGI

SERIES-238 ALUMINUM FIXED WINDOW (L.M.I.)

CGI WINDOWS & DOORS
10100 N.W. 25TH STREET
DORAL, FL. 33172
TEL. (305) 593-6590 FAX. (305) 593-6592

revisions:

no	date	by	description
F	10.07.08		GENERAL REV.
G	11.23.11		NO CHANGE THIS SHEET
H	07.31.13		REV. PER RER COMMENTS
I	08.18.14		UPDATED TO 2014 FBC

date: 02-19-99
scale: 1/2" = 1"
dr. by: HAMID
chk. by:

drawing no.
W99-10

PERFORMANCE VALUES OF IMPACT RESISTANT WINDOWS

REFER TO SHEETS 7 THRU 11 FOR INSTALLATION DETAILS

WINDOW DIMS.		GLASS TYPE '2'		GLASS TYPE '3'		GLASS TYPE '6'	
WIDTH	HEIGHT	EXT. (+)	INT. (−)	EXT. (+)	INT. (−)	EXT. (+)	INT. (−)
24"	36"	110.0	180.0	110.0	181.9	110.0	195.0
30"		110.0	144.0	110.0	166.3	110.0	195.0
36"		110.0	120.0	110.0	161.7	104.7	185.5
42"		110.0	120.0	110.0	120.0	110.0	120.0
48"		104.8	104.8	110.0	120.0	110.0	120.0
54"		88.3	88.3	110.0	120.0	110.0	120.0
57"		81.9	81.9	108.3	118.1	108.3	118.1
60"		76.9	76.9	105.9	115.5	105.9	115.5
63"		72.5	72.5	103.7	113.2	103.7	113.2
66"		68.5	68.5	90.0	90.0	90.0	90.0
69"		64.5	64.5	90.0	90.0	90.0	90.0
72"		60.9	60.9	90.0	90.0	90.0	90.0
75"		57.8	57.8	90.0	90.0	90.0	90.0
78"		55.0	55.0	90.0	90.0	90.0	90.0
81"		50.2	50.2	90.0	90.0	90.0	90.0
84"		48.6	48.6	90.0	90.0	90.0	90.0
87"		47.0	47.0	90.0	90.0	90.0	90.0
24"	42"	110.0	168.0	110.0	169.7	110.0	195.0
30"		110.0	144.0	110.0	150.9	110.0	195.0
36"		110.0	120.0	110.0	120.0	110.0	120.0
42"		102.9	102.9	110.0	120.0	110.0	120.0
48"		87.2	87.2	110.0	120.0	110.0	120.0
54"		76.9	76.9	103.9	113.4	103.9	113.4
57"		72.2	72.2	90.0	90.0	90.0	90.0
60"		67.9	67.9	90.0	90.0	90.0	90.0
63"		63.9	63.9	90.0	90.0	90.0	90.0
66"		60.2	60.2	90.0	90.0	90.0	90.0
69"		55.3	55.3	90.0	90.0	90.0	90.0
72"		52.0	52.0	90.0	90.0	90.0	90.0
75"		49.1	49.1	90.0	90.0	90.0	90.0
78"		46.7	46.7	88.4	88.4	90.0	90.0
81"		44.8	44.8	85.4	85.4	90.0	90.0
84"		–	–	–	–	90.0	90.0
87"		–	–	–	–	70.0	70.0
24"	48"	110.0	160.0	110.0	161.7	110.0	195.0
30"		110.0	120.0	110.0	141.1	108.2	191.8
36"		104.8	104.8	110.0	120.0	110.0	120.0
42"		87.2	87.2	110.0	120.0	110.0	120.0
48"		77.3	77.3	110.0	120.0	110.0	120.0
54"		69.8	69.8	90.0	90.0	90.0	90.0
57"		66.3	66.3	90.0	90.0	90.0	90.0
60"		65.0	65.0	90.0	90.0	90.0	90.0
63"		60.8	60.8	90.0	90.0	90.0	90.0
66"		57.0	57.0	90.0	90.0	90.0	90.0
69"		53.6	53.6	89.6	89.6	90.0	90.0
72"		50.6	50.6	85.5	85.5	90.0	90.0
75"		–	–	–	–	90.0	90.0
78"		–	–	–	–	70.0	70.0
81"		–	–	–	–	70.0	70.0
84"		–	–	–	–	70.0	70.0
87"		–	–	–	–	70.0	70.0
24"	54"	110.0	142.2	110.0	155.9	110.0	195.0
30"		103.3	103.3	110.0	120.0	110.0	120.0
36"		88.3	88.3	110.0	120.0	110.0	120.0
42"		76.9	76.9	103.9	113.4	103.9	113.4
48"		69.8	69.8	90.0	90.0	90.0	90.0
54"		67.4	67.4	80.0	80.0	80.0	80.0
57"		63.7	63.7	80.0	80.0	80.0	80.0
60"		60.2	60.2	80.0	80.0	80.0	80.0
63"		57.1	57.1	80.0	80.0	80.0	80.0
66"		–	–	–	–	80.0	80.0
69"		–	–	–	–	70.0	70.0
72"		–	–	–	–	70.0	70.0
75"		–	–	–	–	70.0	70.0
78"		–	–	–	–	70.0	70.0
81"		–	–	–	–	70.0	70.0
84"		–	–	–	–	70.0	70.0
87"		–	–	–	–	70.0	70.0

PERFORMANCE VALUES OF IMPACT RESISTANT WINDOWS

REFER TO SHEETS 7 THRU 11 FOR INSTALLATION DETAILS

WINDOW DIMS.		GLASS TYPE '2'		GLASS TYPE '3'		GLASS TYPE '6'	
WIDTH	HEIGHT	EXT. (+)	INT. (−)	EXT. (+)	INT. (−)	EXT. (+)	INT. (−)
24"	60"	110.0	120.0	110.0	151.6	110.0	195.0
30"		91.2	91.2	110.0	120.0	110.0	120.0
36"		76.9	76.9	105.9	115.5	105.9	115.5
42"		67.9	67.9	90.0	90.0	90.0	90.0
48"		65.0	65.0	90.0	90.0	90.0	90.0
54"		60.2	60.2	80.0	80.0	80.0	80.0
57"		57.6	57.6	75.8	75.8	75.8	75.8
60"		–	–	–	–	72.0	72.0
63"		–	–	–	–	70.0	70.0
66"		–	–	–	–	70.0	70.0
69"		–	–	–	–	70.0	70.0
72"		–	–	–	–	70.0	70.0
75"		–	–	–	–	70.0	70.0
78"		–	–	–	–	70.0	70.0
81"		–	–	–	–	70.0	70.0
84"		–	–	–	–	70.0	70.0
87"		–	–	–	–	50.0	50.0
24"	66"	110.0	119.6	110.0	120.0	110.0	120.0
30"		81.8	81.8	110.0	120.0	110.0	120.0
36"		68.5	68.5	90.0	90.0	90.0	90.0
42"		60.2	60.2	90.0	90.0	90.0	90.0
48"		57.0	57.0	90.0	90.0	90.0	90.0
54"		–	–	–	–	80.0	80.0
57"		–	–	–	–	70.0	70.0
60"		–	–	–	–	70.0	70.0
63"		–	–	–	–	68.6	68.6
66"		–	–	–	–	65.5	65.5
69"		–	–	–	–	65.5	65.5
72"		–	–	–	–	65.5	65.5
75"		–	–	–	–	65.5	65.5
78"		–	–	–	–	50.0	50.0
81"		–	–	–	–	50.0	50.0
84"		–	–	–	–	50.0	50.0
87"		–	–	–	–	50.0	50.0
24"	72"	110.0	111.5	110.0	120.0	110.0	120.0
30"		77.0	77.0	110.0	120.0	110.0	120.0
36"		60.9	60.9	90.0	90.0	90.0	90.0
42"		52.0	52.0	90.0	90.0	90.0	90.0
48"		50.6	50.6	85.5	85.5	90.0	90.0
54"		–	–	–	–	70.0	70.0
57"		–	–	–	–	70.0	70.0
60"		–	–	–	–	70.0	70.0
63"		–	–	–	–	68.6	68.6
66"		–	–	–	–	65.5	65.5
69"		–	–	–	–	62.6	62.6
72"		–	–	–	–	50.0	50.0
75"		–	–	–	–	50.0	50.0
78"		–	–	–	–	50.0	50.0
81"		–	–	–	–	50.0	50.0
84"		–	–	–	–	50.0	50.0
87"		–	–	–	–	50.0	50.0
24"	78"	108.1	108.1	110.0	120.0	110.0	120.0
30"		70.2	70.2	110.0	120.0	110.0	120.0
36"		55.0	55.0	90.0	90.0	90.0	90.0
42"		46.7	46.7	88.4	88.4	90.0	90.0
48"		–	–	–	–	70.0	70.0
54"		–	–	–	–	70.0	70.0
57"		–	–	–	–	70.0	70.0
60"		–	–	–	–	70.0	70.0
63"		–	–	–	–	68.6	68.6
66"		–	–	–	–	50.0	50.0
69"		–	–	–	–	50.0	50.0
72"		–	–	–	–	50.0	50.0
75"		–	–	–	–	50.0	50.0
78"		–	–	–	–	50.0	50.0
81"		–	–	–	–	50.0	50.0

PERFORMANCE VALUES OF IMPACT RESISTANT WINDOWS

REFER TO SHEETS 7 THRU 11 FOR INSTALLATION DETAILS

WINDOW DIMS.		GLASS TYPE '2'		GLASS TYPE '3'		GLASS TYPE '6'	
WIDTH	HEIGHT	EXT. (+)	INT. (−)	EXT. (+)	INT. (−)	EXT. (+)	INT. (−)
24"	84"	110.0	114.4	110.0	120.0	110.0	120.0
30"		65.7	65.7	90.0	90.0	90.0	90.0
36"		48.6	48.6	90.0	90.0	90.0	90.0
42"		–	–	–	–	90.0	90.0
48"		–	–	–	–	70.0	70.0
54"		–	–	–	–	70.0	70.0
57"		–	–	–	–	70.0	70.0
60"		–	–	–	–	70.0	70.0
63"		–	–	–	–	50.0	50.0
66"		–	–	–	–	50.0	50.0
69"		–	–	–	–	50.0	50.0
72"		–	–	–	–	50.0	50.0
75"		–	–	–	–	50.0	50.0
24"	96"	88.6	88.6	110.0	120.0	110.0	120.0
30"		57.9	57.9	90.0	90.0	90.0	90.0
36"		43.0	43.0	90.0	90.0	90.0	90.0
42"		–	–	–	–	70.0	70.0
48"		–	–	–	–	70.0	70.0
54"		–	–	–	–	50.0	50.0
57"		–	–	–	–	50.0	50.0
60"		–	–	–	–	50.0	50.0
63"		–	–	–	–	50.0	50.0
66"		–	–	–	–	50.0	50.0
24"	108"	70.4	70.4	90.0	90.0	90.0	90.0
30"		56.4	56.4	90.0	90.0	90.0	90.0
36"		–	–	–	–	70.0	70.0
42"		–	–	–	–	70.0	70.0
48"		–	–	–	–	50.0	50.0
54"		–	–	–	–	50.0	50.0
57"		–	–	–	–	50.0	50.0
60"		–	–	–	–	50.0	50.0
24"	120"	59.5	59.5	90.0	90.0	90.0	90.0
30"		–	–	–	–	90.0	90.0
36"		–	–	–	–	70.0	70.0
42"		–	–	–	–	70.0	70.0
48"		–	–	–	–	50.0	50.0
54"		–	–	–	–	50.0	50.0
24"	132"	46.9	46.9	90.0	90.0	90.0	90.0
30"		–	–	–	–	70.0	70.0
36"		–	–	–	–	70.0	70.0
42"		–	–	–	–	50.0	50.0
48"		–	–	–	–	50.0	50.0
24"	144"	41.3	41.3	90.0	90.0	90.0	90.0
30"		–	–	–	–	70.0	70.0
36"		–	–	–	–	50.0	50.0
42"		–	–	–	–	50.0	50.0
24"	156"	–	–	–	–	70.0	70.0
30"		–	–	–	–	70.0	70.0
36"		–	–	–	–	50.0	50.0

NOTE:
LOAD AREA LIMITS
FOR +110, −195 PSF = 10.0 SQ. FT.
+110, −120 PSF = 16.3 SQ. FT.
+90, −90 PSF = 24.0 SQ. FT.
+70, −70 PSF = 35.0 SQ. FT.
+50, −50 PSF = 45.0 SQ. FT.

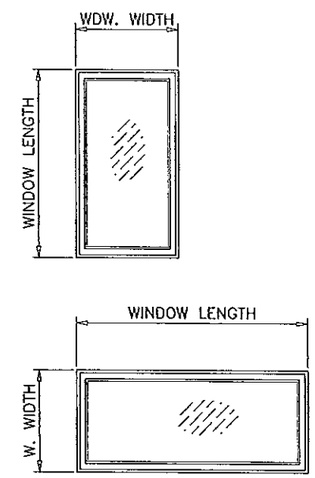

NOTE:
WIDTH AND LENGTH DIMENSIONS CAN BE ORIENTED VERTICALLY OR HORIZONTALLY AS SHOWN ABOVE.

NOTE:
GLASS CAPACITIES ON THIS SHEET ARE BASED ON ASTM E1300-09 (3 SEC. GUSTS).

Engr: JAVAD AHMAD
CIVIL
FLA. PE # 70592
C.A.N. 3538

AUG 20 2014

PRODUCT REVISED
as complying with the Florida Building Code
Acceptance No 14-0903.06
Expiration Date Oct 26, 2018
By Manuel Saez
Miami Dade Product Control

AL-FAROOQ CORPORATION
ENGINEERS & PRODUCT DEVELOPMENT
1235 S.W. 87 AVE
MIAMI, FLORIDA 33174
TEL. (305) 264-8100 FAX. (305) 262-6978
COMP-ANL\W99-10CGI

SERIES-238 ALUMINUM FIXED WINDOW (L.M.I.)

CGI WINDOWS & DOORS
10100 N.W. 25TH STREET
DORAL, FL. 33172
TEL. (305) 593-6590 FAX. (305) 593-6592

revisions:

no	date	by	description
F	10.07.08		GENERAL REV.
G	11.23.11		NO CHANGE THIS SHEET
H	07.31.13		NO CHANGE THIS SHEET
I	08.18.14		UPDATED TO 2014 FBC

date: 02-19-99
scale: 1/2" = 1"
dr. by: HAMID
chk. by:

drawing no.
W99-10

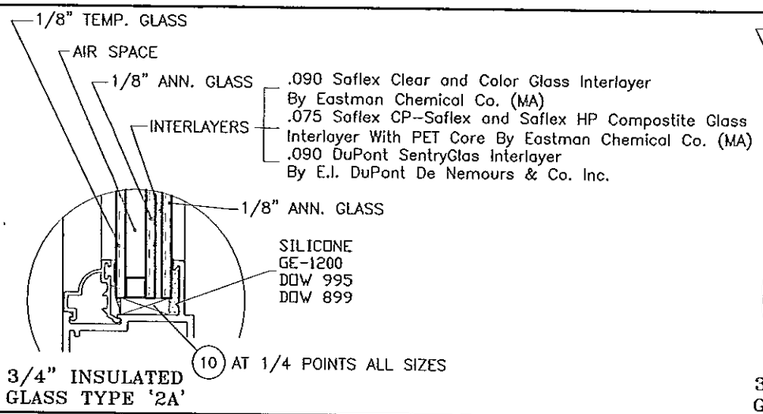

3/4" INSULATED GLASS TYPE '2A'

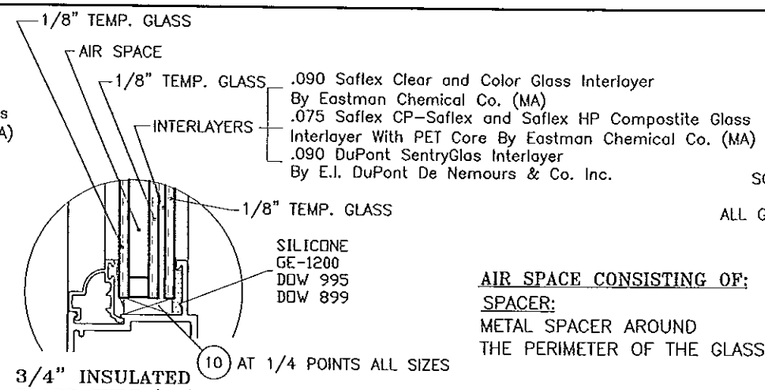

3/4" INSULATED GLASS TYPE '3A'

AIR SPACE CONSISTING OF:
SPACER:
METAL SPACER AROUND THE PERIMETER OF THE GLASS.

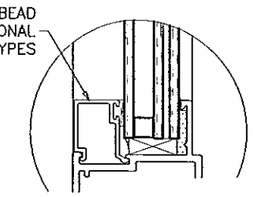

PERFORMANCE VALUES OF IMPACT RESISTANT WINDOWS
REFER TO SHEETS 7 THRU 11 FOR INSTALLATION DETAILS

WINDOW DIMS.		GLASS TYPE '2A'		GLASS TYPE '3A'	
WIDTH	HEIGHT	EXT. (+)	INT. (−)	EXT. (+)	INT. (−)
24"	36"	110.0	180.0	110.0	180.0
30"		110.0	144.0	110.0	144.0
36"		110.0	120.0	110.0	120.0
42"		110.0	120.0	110.0	120.0
48"		110.0	111.3	110.0	120.0
54"		93.8	93.8	110.0	120.0
57"		87.0	87.0	110.0	116.9
60"		81.7	81.7	120.0	114.3
63"		77.0	77.0	120.0	112.0
66"		72.7	72.7	90.0	90.0
69"		68.5	68.5	90.0	90.0
72"		64.7	64.7	90.0	90.0
75"		61.4	61.4	90.0	90.0
78"		58.4	58.4	90.0	90.0
81"		53.4	53.4	90.0	90.0
84"		51.6	51.6	90.0	90.0
87"		49.9	49.9	90.0	90.0
24"	42"	110.0	168.0	110.0	168.0
30"		110.0	144.0	110.0	144.0
36"		110.0	120.0	110.0	120.0
42"		102.9	102.9	96.9	102.9
48"		92.7	92.7	96.9	102.9
54"		81.7	81.7	96.9	102.9
57"		76.7	76.7	90.0	90.0
60"		72.1	72.1	90.0	90.0
63"		67.9	67.9	90.0	90.0
66"		63.9	63.9	90.0	90.0
69"		58.8	58.8	90.0	90.0
72"		55.2	55.2	90.0	90.0
75"		52.2	52.2	90.0	90.0
78"		49.6	49.6	90.0	90.0
81"		47.6	47.6	90.0	90.0
24"	48"	110.0	160.0	110.0	160.0
30"		110.0	120.0	110.0	120.0
36"		110.0	111.3	110.0	120.0
42"		92.7	92.7	96.9	102.9
48"		82.1	82.1	84.8	90.0
54"		74.2	74.2	90.0	90.0
57"		70.4	70.4	90.0	90.0
60"		69.0	69.0	90.0	90.0
63"		64.6	64.6	90.0	90.0
66"		60.5	60.5	90.0	90.0
69"		57.0	57.0	90.0	90.0
72"		53.7	53.7	90.0	90.0

PERFORMANCE VALUES OF IMPACT RESISTANT WINDOWS
REFER TO SHEETS 7 THRU 11 FOR INSTALLATION DETAILS

WINDOW DIMS.		GLASS TYPE '2A'		GLASS TYPE '3A'	
WIDTH	HEIGHT	EXT. (+)	INT. (−)	EXT. (+)	INT. (−)
24"	54"	110.0	151.0	110.0	154.3
30"		109.7	109.7	110.0	120.0
36"		93.8	93.8	110.0	120.0
42"		81.7	81.7	96.9	102.9
48"		74.2	74.2	90.0	90.0
54"		71.6	71.6	80.0	80.0
57"		67.6	67.6	80.0	80.0
60"		64.0	64.0	80.0	80.0
63"		60.6	60.6	80.0	80.0
24"	60"	110.0	120.0	110.0	120.0
30"		96.9	96.9	110.0	120.0
36"		81.7	81.7	110.0	114.3
42"		72.1	72.1	90.0	90.0
48"		69.0	69.0	90.0	90.0
54"		64.0	64.0	80.0	80.0
57"		61.2	61.2	75.8	75.8
24"	66"	110.0	120.0	110.0	120.0
30"		86.9	86.9	110.0	120.0
36"		72.7	72.7	90.0	90.0
42"		63.9	63.9	90.0	90.0
48"		60.5	60.5	90.0	90.0
24"	72"	110.0	118.4	110.0	120.0
30"		81.8	81.8	110.0	120.0
36"		64.7	64.7	90.0	90.0
42"		55.2	55.2	90.0	90.0
48"		53.7	53.7	90.0	90.0
24"	78"	110.0	114.8	110.0	120.0
30"		74.6	74.6	110.0	118.9
36"		58.4	58.4	90.0	90.0
42"		49.6	49.6	90.0	90.0
24"	84"	110.0	120.0	110.0	120.0
30"		69.8	69.8	90.0	90.0
36"		51.6	51.6	90.0	90.0
24"	96"	94.1	94.1	110.0	120.0
30"		61.6	61.6	90.0	90.0
36"		45.6	45.6	90.0	90.0
24"	108"	74.8	74.8	90.0	90.0
30"		59.9	59.9	90.0	90.0
24"	120"	63.2	63.2	90.0	90.0
24"	132"	49.8	49.8	90.0	90.0
24"	144"	43.8	43.8	90.0	90.0

PERFORMANCE VALUES OF IMPACT RESISTANT WINDOWS
REFER TO SHEETS 7 THRU 11 FOR INSTALLATION DETAILS

WINDOW DIMS.		GLASS TYPE '2A'		GLASS TYPE '3A'	
WIDTH	HEIGHT	EXT. (+)	INT. (−)	EXT. (+)	INT. (−)
19-1/8"	26"	110.0	195.0	110.0	195.0
26-1/2"		110.0	166.2	110.0	166.2
37"		110.0	166.2	110.0	166.2
53-1/8"		110.0	120.0	110.0	120.0
19-1/8"	38-3/8"	110.0	195.0	110.0	195.0
26-1/2"		110.0	163.0	110.0	163.0
37"		110.0	116.8	110.0	116.8
53-1/8"		89.3	89.3	110.0	112.6
19-1/8"	50-5/8"	110.0	185.7	110.0	185.7
26-1/2"		110.0	139.4	110.0	147.2
37"		100.9	100.9	110.0	116.8
53-1/8"		72.1	72.1	85.3	85.3
19-1/8"	63"	110.0	177.5	110.0	177.5
26-1/2"		109.1	109.1	110.0	120.0
37"		74.9	74.9	110.0	110.2
53-1/8"		61.3	61.3	81.3	81.3
19-1/8"	74-1/4"	110.0	120.0	110.0	120.0
26-1/2"		95.4	95.4	110.0	120.0
37"		60.4	60.4	90.0	90.0

NOTE:
LOAD AREA LIMITS
FOR +110, −195 PSF = 9.32 SQ. FT.
+110, −120 PSF = 16.2 SQ. FT.
+90, −90 PSF = 24.0 SQ. FT.

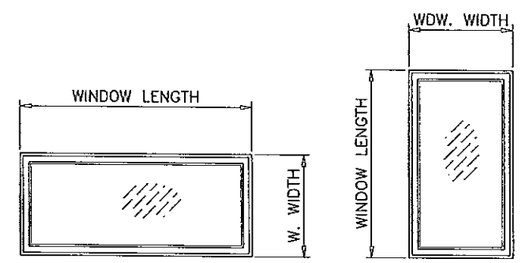

NOTE:
WIDTH AND LENGTH DIMENSIONS CAN BE ORIENTED VERTICALLY OR HORIZONTALLY AS SHOWN ABOVE.

NOTE:
GLASS CAPACITIES ON THIS SHEET ARE BASED ON ASTM E1300-09 (3 SEC. GUSTS).

Engr: JAVAD AHMAD
CIVIL
FLA. PE # 70592
C.A.No 3538
AUG 20 2014

PRODUCT REVISED
as complying with the Florida Building Code
Acceptance No 14-0903.06
Expiration Date Oct. 16, 2018
By Manuel Perez
Miami Dade Product Control

AL-FAROOQ CORPORATION
ENGINEERS & PRODUCT DEVELOPMENT
1235 S.W. 87 AVE
MIAMI, FLORIDA 33174
TEL. (305) 264-8100 FAX. (305) 262-6978
COMP-ANL\W99-10CGI

SERIES-238 ALUMINUM FIXED WINDOW (L.M.I.)

CGI WINDOWS & DOORS
10100 N.W. 25TH STREET
DORAL, FL. 33172
TEL. (305) 593-6590 FAX. (305) 593-6592

revisions:

no	date	by	description
F	10.07.08		GENERAL REV.
G	11.23.11		UPDATED TO 2010 FBC
H	07.31.13		REV. PER RER COMMENTS
I	08.18.14		UPDATED TO 2014 FBC

date: 02-19-99
scale: 1/2" = 1"
dr. by: HAMID
chk. by:

drawing no.
W99-10

INSTALLATION CONDITIONS FLANGE FRAME (APPLIES TO ALL FOUR SIDES)

FOR ANCHOR PERFORMANCE VALUES SEE SHEET 9

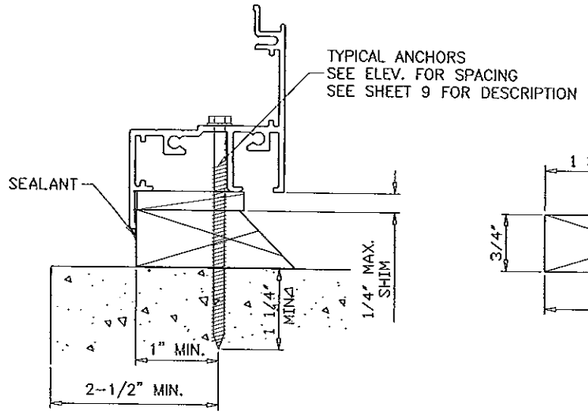

INSTALLATION TYPE '1'

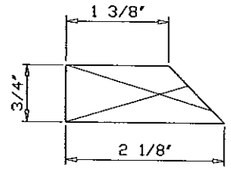

WOOD BUCK TYPE '1'

MATERIAL: PRESSURE TREATED

TYPICAL INSTALLATION DETAIL
ON ALL FOUR SIDES/USING WOOD

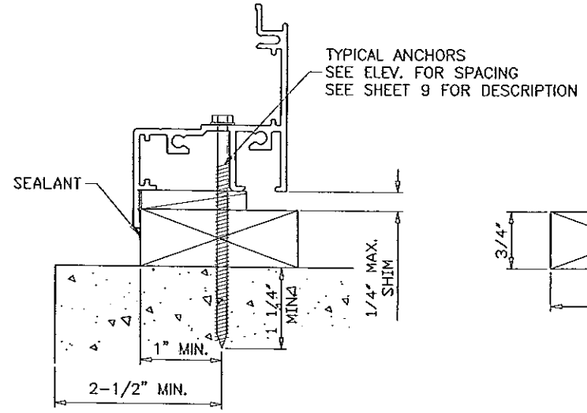

INSTALLATION TYPE '2'

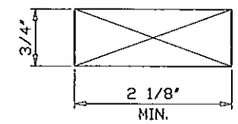

WOOD BUCK TYPE '2'

MATERIAL: PRESSURE TREATED

TYPICAL INSTALLATION DETAIL
ON ALL FOUR SIDES/USING WOOD

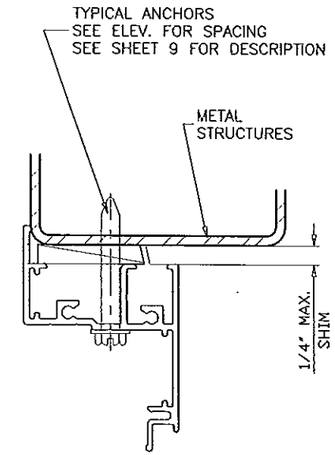

ATTACHMENT TO
METAL STRUCTURES

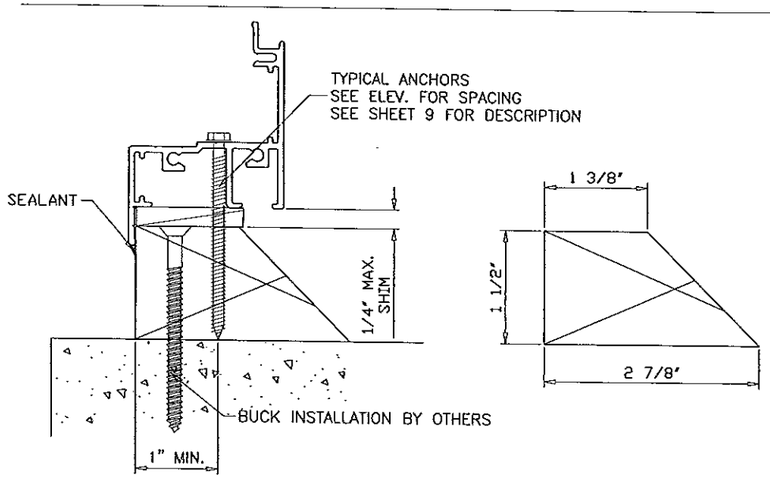

INSTALLATION TYPE '3'

WOOD BUCK TYPE '3'

MATERIAL: PRESSURE TREATED

TYPICAL INSTALLATION DETAIL
ON ALL FOUR SIDES/USING WOOD

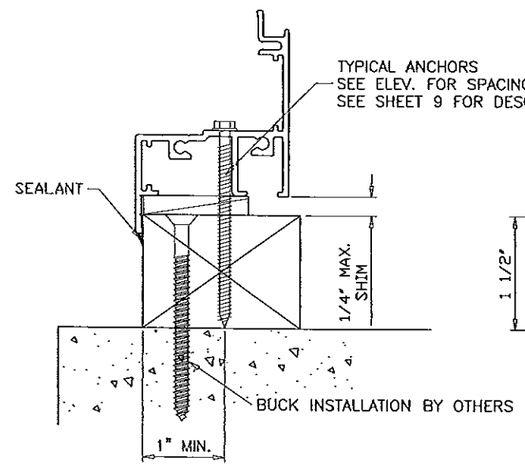

INSTALLATION TYPE '4'

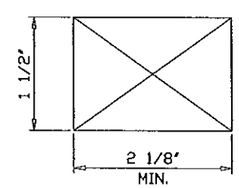

WOOD BUCK TYPE '4'

MATERIAL: PRESSURE TREATED

TYPICAL INSTALLATION DETAIL
ON ALL FOUR SIDES/USING WOOD

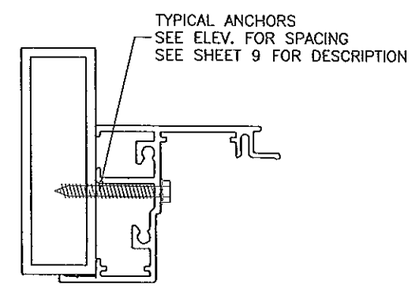

ATTACHMENT TO
APPROVED MULLIONS

WOOD BUCKS NOT BY CGI CORP., MUST SUSTAIN LOADS IMPOSED BY GLAZING SYSTEM AND TRANSFER THEM TO THE BUILDING STRUCTURE.

Engr: JAVAD AHMAD
CIVIL
FLA. PE # 70592
C.A.N. 3538

AUG 20 2014

PRODUCT REVISED
as complying with the Florida
Building Code
Acceptance No 14-0903.06
Expiration Date Oct. 26, 2018
By Manuel Sosa
Miami Dade Product Control

AL-FAROOQ CORPORATION
ENGINEERS & PRODUCT DEVELOPMENT
1235 S.W. 87 AVE
MIAMI, FLORIDA 33174
TEL. (305) 264-8100 FAX. (305) 262-6978

COMP-ANL\W99-10CGI

SERIES-238 ALUMINUM FIXED WINDOW (L.M.I.)

CGI WINDOWS & DOORS
10100 N.W. 25TH STREET
DORAL, FL. 33172
TEL. (305) 593-6590 FAX. (305) 593-6592

revisions:

no	date	by	description
F	10.07.08		GENERAL REV.
G	11.23.11		NO CHANGE THIS SHEET
H	07.31.13		NO CHANGE THIS SHEET
I	08.18.14		UPDATED TO 2014 FBC

date: 02-19-99
scale: 1/2" = 1"
dr. by: HAMID
chk. by:

drawing no.
W99-10

INSTALLATION CONDITIONS EQUAL LEG FRAME (APPLIES TO ALL FOUR SIDES)

FOR ANCHOR PERFORMANCE VALUES SEE SHEET 9

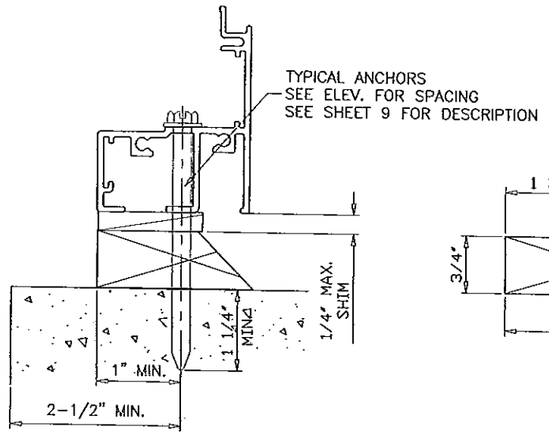

INSTALLATION TYPE '1'

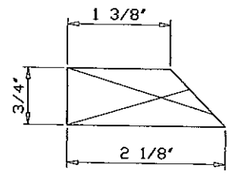

WOOD BUCK TYPE '1'

MATERIAL: PRESSURE TREATED

TYPICAL INSTALLATION DETAIL
ON ALL FOUR SIDES/USING WOOD

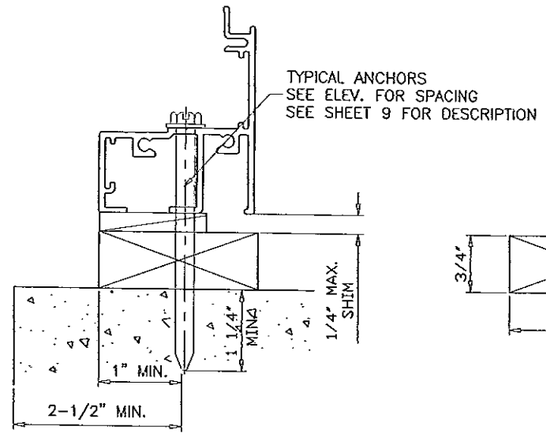

INSTALLATION TYPE '2'

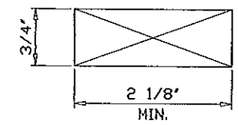

WOOD BUCK TYPE '2'

MATERIAL: PRESSURE TREATED

TYPICAL INSTALLATION DETAIL
ON ALL FOUR SIDES/USING WOOD

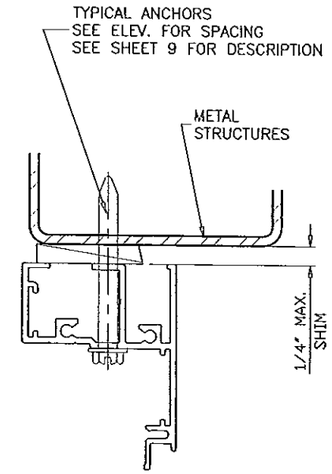

ATTACHMENT TO
METAL STRUCTURES

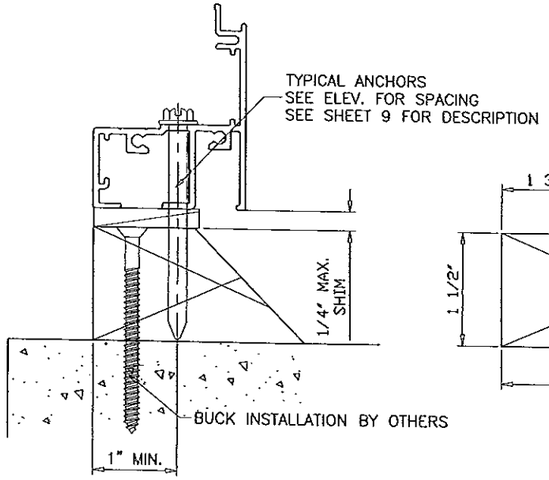

INSTALLATION TYPE '3'

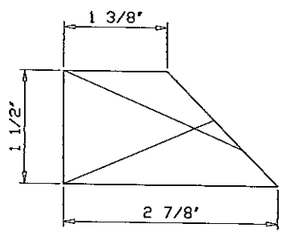

WOOD BUCK TYPE '3'

MATERIAL: PRESSURE TREATED

TYPICAL INSTALLATION DETAIL
ON ALL FOUR SIDES/USING WOOD

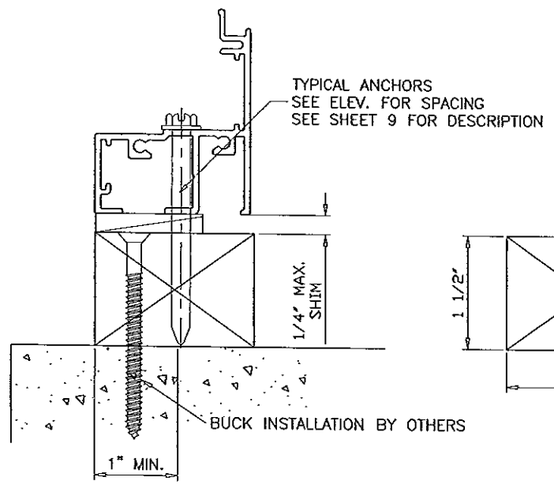

INSTALLATION TYPE '4'

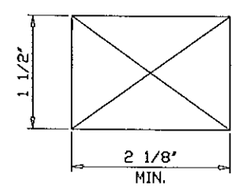

WOOD BUCK TYPE '4'

MATERIAL: PRESSURE TREATED

TYPICAL INSTALLATION DETAIL
ON ALL FOUR SIDES/USING WOOD

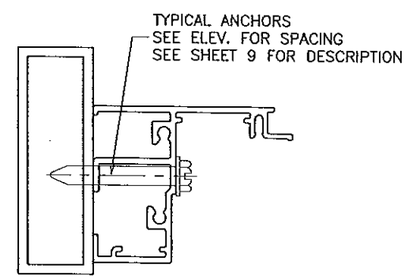

ATTACHMENT TO
APPROVED MULLIONS

WOOD BUCKS NOT BY CGI CORP., MUST SUSTAIN LOADS IMPOSED BY GLAZING SYSTEM AND TRANSFER THEM TO THE BUILDING STRUCTURE.

Engr: DR. HUMAYOUN FAROOQ
STRUCTURES
FLA. PE # 16557
C.A.N. 3538

AUG 20 2014

PRODUCT REVISED
as complying with the Florida Building Code
Acceptance No 14-0903.06
Expiration Date Oct. 26, 2018
By Manuel Diaz
Miami-Dade Product Control

AL-FAROOQ CORPORATION
ENGINEERS & PRODUCT DEVELOPMENT
1235 S.W. 87 AVE
MIAMI, FLORIDA 33174
TEL. (305) 264-8100 FAX. (305) 262-6978

COMP-ANL\W99-10CGI

SERIES-238 ALUMINUM FIXED WINDOW (L.M.I.)

CGI WINDOWS & DOORS
10100 N.W. 25TH STREET
DORAL, FL. 33172
TEL. (305) 593-6590 FAX. (305) 593-6592

revisions:

no	date	by	description
F	10.07.08		GENERAL REV.
G	11.23.11		NO CHANGE THIS SHEET
H	07.31.13		NO CHANGE THIS SHEET
I	08.18.14		UPDATED TO 2014 FBC

date: 02-19-99
scale: 1/2" = 1"
dr. by: HAMID
chk. by:

drawing no.
W99-10

PERFORMANCE VALUES OF INSTALLATION ANCHORS

REFER TO SHEETS 7 & 8 FOR DETAILS

WINDOW DIMS. WIDTH	WINDOW DIMS. HEIGHT	EXT. (+) INT. (−)
24"	36"	195.0
30"		195.0
36"		195.0
42"		195.0
48"		193.6
54"		195.0
57"		195.0
60"		184.4
63"		172.1
66"		161.3
69"		189.8
72"		179.3
75"		169.8
78"		161.3
81"		153.7
84"		146.7
87"		168.3
24"	42"	195.0
30"		195.0
36"		195.0
42"		195.0
48"		184.4
54"		195.0
57"		184.4
60"		170.2
63"		158.0
66"		147.5
69"		172.9
72"		162.7
75"		153.7
78"		145.6
81"		138.3
84"		131.7
87"		150.9
24"	48"	195.0
30"		195.0
36"		193.6
42"		184.4
48"		181.5
54"		181.5
57"		176.0
60"		161.3
63"		148.9
66"		138.3
69"		161.3
72"		151.3
75"		142.4
78"		134.4
81"		127.4
84"		121.0
87"		138.3

NOTE:
INTERPOLATION BETWEEN SIZES ALLOWED.

PERFORMANCE VALUES OF INSTALLATION ANCHORS

REFER TO SHEETS 7 & 8 FOR DETAILS

WINDOW DIMS. WIDTH	WINDOW DIMS. HEIGHT	EXT. (+) INT. (−)
24"	54"	195.0
30"		195.0
36"		195.0
42"		195.0
48"		181.5
54"		191.2
57"		172.1
60"		156.4
63"		143.4
66"		132.4
69"		153.7
72"		143.4
75"		134.4
78"		126.5
81"		119.5
84"		113.2
87"		129.1
24"	60"	195.0
30"		195.0
36"		184.4
42"		170.2
48"		161.3
54"		156.4
57"		155.3
60"		154.9
63"		140.8
66"		129.1
69"		148.9
72"		138.3
75"		129.1
78"		121.0
81"		113.9
84"		107.6
87"		122.3
24"	66"	195.0
30"		182.2
36"		161.3
42"		147.5
48"		138.3
54"		132.4
57"		130.4
60"		129.1
63"		128.3
66"		128.0
69"		128.0
72"		128.0
75"		125.7
78"		117.3
81"		110.0
84"		103.5
87"		117.3

PERFORMANCE VALUES OF INSTALLATION ANCHORS

REFER TO SHEETS 7 & 8 FOR DETAILS

WINDOW DIMS. WIDTH	WINDOW DIMS. HEIGHT	EXT. (+) INT. (−)
24"	72"	195.0
30"		195.0
36"		179.3
42"		162.7
48"		151.3
54"		143.4
57"		140.5
60"		138.3
63"		136.6
66"		128.0
69"		134.7
72"		134.4
75"		124.1
78"		115.2
81"		107.6
84"		100.8
87"		113.9
24"	78"	195.0
30"		184.4
36"		161.3
42"		145.6
48"		134.4
54"		126.5
57"		123.5
60"		121.0
63"		119.0
66"		117.3
69"		116.1
72"		115.2
75"		114.7
78"		114.6
81"		106.4
24"	84"	195.0
30"		168.3
36"		146.7
42"		131.7
48"		121.0
54"		113.2
57"		110.2
60"		107.6
63"		105.4
66"		103.5
69"		102.0
72"		100.8
75"		99.9
24"	96"	195.0
30"		172.1
36"		148.9
42"		132.8
48"		121.0
54"		112.2
57"		108.7
60"		105.6
63"		102.9
66"		100.6

PERFORMANCE VALUES OF INSTALLATION ANCHORS

REFER TO SHEETS 7 & 8 FOR DETAILS

WINDOW DIMS. WIDTH	WINDOW DIMS. HEIGHT	EXT. (+) INT. (−)
24"	108"	195.0
30"		174.9
36"		150.6
42"		133.5
48"		121.0
54"		111.5
57"		107.7
60"		104.2
24"	120"	188.2
30"		154.9
36"		132.9
42"		117.3
48"		105.9
54"		97.1
24"	132"	193.6
30"		158.9
36"		135.9
42"		119.6
48"		107.6
24"	144"	195.0
30"		162.1
36"		138.3
42"		121.4
24"	156"	181.5
30"		148.3
36"		126.3

PERFORMANCE VALUES OF INSTALLATION ANCHORS

REFER TO SHEET 7 & 8 FOR DETAILS

WINDOW DIMS. WIDTH	WINDOW DIMS. HEIGHT	EXT. (+) INT. (−)
19−1/8"	26"	195.0
26−1/2"		195.0
37"		195.0
53−1/8"		195.0
19−1/8"	38−3/8"	195.0
26−1/2"		195.0
37"		195.0
53−1/8"		195.0
19−1/8"	50−5/8"	195.0
26−1/2"		195.0
37"		195.0
53−1/8"		195.0
19−1/8"	63"	195.0
26−1/2"		195.0
37"		169.3
53−1/8"		144.0
19−1/8"	74−1/4"	195.0
26−1/2"		195.0
37"		168.9
53−1/8"		137.6

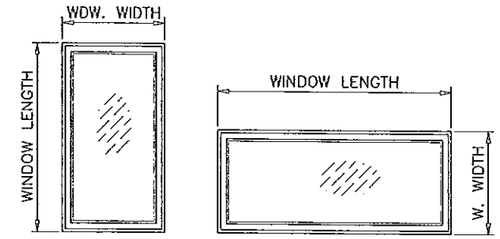

NOTE:
WIDTH AND LENGTH DIMENSIONS CAN BE ORIENTED VERTICALLY OR HORIZONTALLY AS SHOWN ABOVE. INTERPOLATION BETWEEN SIZES ALLOWED.

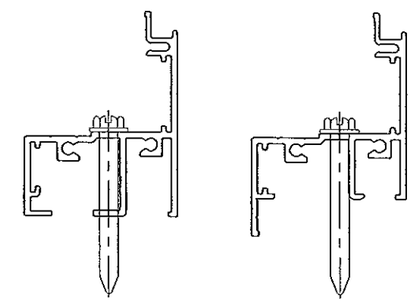

TYPICAL ANCHORS: SEE ELEV. FOR SPACING

1/4" DIA. KWIK−CON II BY 'HILTI' (Fu=163 KSI, Fy=157 KSI)

1/4" DIA. ULTRACON BY 'ELCO' (Fu=177 KSI, Fy=155 KSI)

INTO 2BY WOOD BUCKS OR WOOD STRUCTURES
1−1/2" MIN. PENETRATION INTO WOOD

THRU 1BY BUCKS INTO CONC. OR MASONRY
1−1/4" MIN. EMBED INTO CONC. OR MASONRY

DIRECTLY INTO CONC. OR FILLED BLOCK
1−3/4" MIN. EMBED INTO CONC. OR FILLED BLOCKS

#14 SMS OR SELF DRILLING SCREWS (GRADE 2 CRS)

INTO MIAMI−DADE COUNTY APPROVED MULLIONS (MIN. THK. = 1/8")

INTO METAL STRUCTURES
STEEL : 12 GA. MIN. (Fy = 36 KSI MIN.)
ALUMINUM : 1/8" THK. MIN. (6063−T5 MIN.)
(STEEL IN CONTACT WITH ALUMINUM TO BE PLATED OR PAINTED)

TYPICAL EDGE DISTANCE

INTO CONCRETE AND MASONRY = 2−1/2" MIN.
INTO WOOD STRUCTURE = 1" MIN.
INTO METAL STRUCTURE = 3/4" MIN.

WOOD AT HEAD, SILL OR JAMBS SG = 0.55 MIN.
CONCRETE AT HEAD, SILL OR JAMBS f'c = 3000 PSI MIN.
C−90 HOLLOW/FILLED BLOCK AT JAMBS f'm = 2000 PSI MIN.

Engr: JAVAD AHMAD
CIVIL
FLA. PE # 70592
C.A.N. 3538

AUG 20 2014

PRODUCT REVISED
as complying with the Florida Building Code
Acceptance No 14-0903.06
Expiration Date Oct. 26, 2018
By Manuel Perez
Miami Dade Product Control

AL-FAROOQ CORPORATION
ENGINEERS & PRODUCT DEVELOPMENT
1235 S.W. 87 AVE
MIAMI, FLORIDA 33174
TEL. (305) 264-8100 FAX. (305) 262-6978

COMP-ANL\W99-10CGI

SERIES-238 ALUMINUM FIXED WINDOW (L.M.I.)

CGI WINDOWS & DOORS
10100 N.W. 25TH STREET
DORAL, FL. 33172
TEL. (305) 593-6590 FAX. (305) 593-6592

revisions:

no	date	by	description
F	10.07.08		GENERAL REV.
G	11.23.11		ANCHORS REV.
H	07.31.13		NO CHANGE THIS SHEET
I	08.18.14		UPDATED TO 2014 FBC

date: 02-19-99
scale: 1/2" = 1"
dr. by: HAMID
chk. by:

drawing no.
W99-10

PERFORMANCE VALUES OF ALUM BUCK INSTALLATION ANCHORS			
WINDOW DIMS.		ANCHORS AT 17" O.C.	ANCHORS AT 10" O.C.
WIDTH	HEIGHT	EXT. (+) INT. (−)	EXT. (+) INT. (−)
24"	36"	195.0	195.0
30"		195.0	195.0
36"		195.0	195.0
42"		148.0	195.0
48"		157.9	195.0
54"		131.6	195.0
57"		121.4	182.2
60"		112.8	169.1
63"		105.2	184.2
66"		123.3	172.7
69"		116.1	162.5
72"		109.6	153.5
75"		103.9	166.2
78"		98.7	157.9
81"		112.8	150.3
84"		107.6	161.5
87"		103.0	154.4
24"	42"	177.6	195.0
30"		157.9	195.0
36"		148.0	195.0
42"		145.0	193.3
48"		145.0	187.9
54"		123.0	184.5
57"		112.8	169.1
60"		104.1	156.1
63"		96.7	169.1
66"		112.8	157.9
69"		105.7	148.0
72"		99.5	139.3
75"		94.0	150.3
78"		89.0	142.4
81"		101.5	135.3
84"		96.7	145.0
87"		92.3	138.4
24"	48"	195.0	195.0
30"		172.2	195.0
36"		157.9	195.0
42"		145.0	187.9
48"		148.0	185.0
54"		118.4	177.6
57"		107.6	161.5
60"		98.7	148.0
63"		91.1	159.4
66"		105.7	148.0
69"		98.7	138.1
72"		92.5	129.5
75"		87.1	139.3
78"		82.2	131.6
81"		93.5	124.6
84"		88.8	133.2
87"		84.6	126.9

PERFORMANCE VALUES OF ALUM BUCK INSTALLATION ANCHORS			
WINDOW DIMS.		ANCHORS AT 17" O.C.	ANCHORS AT 10" O.C.
WIDTH	HEIGHT	EXT. (+) INT. (−)	EXT. (+) INT. (−)
24"	54"	169.1	195.0
30"		145.7	195.0
36"		131.6	195.0
42"		123.0	184.5
48"		118.4	177.6
54"		116.9	175.4
57"		105.2	157.9
60"		95.7	143.5
63"		87.7	153.5
66"		101.2	141.7
69"		94.0	131.6
72"		87.7	122.8
75"		82.2	131.6
78"		77.4	123.8
81"		87.7	116.9
84"		83.1	124.6
87"		78.9	118.4
24"	60"	148.0	195.0
30"		126.3	189.4
36"		112.8	169.1
42"		104.1	156.1
48"		98.7	148.0
54"		95.7	143.5
57"		95.0	142.4
60"		94.7	142.1
63"		86.1	142.1
66"		94.7	138.1
69"		91.1	127.5
72"		84.6	118.4
75"		78.9	126.3
78"		74.0	118.4
81"		83.6	111.4
84"		78.9	118.4
87"		74.8	112.2
24"	66"	164.4	195.0
30"		139.3	195.0
36"		123.3	172.7
42"		112.8	157.9
48"		105.7	148.0
54"		101.2	141.7
57"		99.7	139.6
60"		94.7	138.1
63"		85.9	137.3
66"		97.9	137.0
69"		89.7	125.6
72"		82.8	115.9
75"		76.9	123.0
78"		71.8	114.8
81"		80.7	107.6
84"		76.0	114.0
87"		71.8	107.6

PERFORMANCE VALUES OF ALUM BUCK INSTALLATION ANCHORS			
WINDOW DIMS.		ANCHORS AT 17" O.C.	ANCHORS AT 10" O.C.
WIDTH	HEIGHT	EXT. (+) INT. (−)	EXT. (+) INT. (−)
24"	72"	148.0	195.0
30"		124.6	174.5
36"		109.6	153.5
42"		99.5	139.3
48"		92.5	129.5
54"		87.7	122.8
57"		86.0	120.3
60"		84.6	118.4
63"		83.5	116.9
66"		82.8	115.9
69"		82.4	115.3
72"		82.2	115.1
75"		75.9	115.1
78"		70.5	112.8
81"		78.9	105.2
84"		74.0	111.0
87"		69.6	104.5
24"	78"	134.5	195.0
30"		112.8	180.4
36"		98.7	157.9
42"		89.0	142.4
48"		82.2	131.6
54"		77.4	123.8
57"		75.5	120.9
60"		74.0	118.4
63"		72.7	116.4
66"		71.8	114.8
69"		71.0	113.6
72"		70.5	112.8
75"		70.2	112.3
78"		70.1	112.1
81"		70.1	104.1
24"	84"	148.0	195.0
30"		123.5	185.3
36"		107.6	161.5
42"		96.7	145.0
48"		88.8	133.2
54"		83.1	124.6
57"		80.8	121.3
60"		78.9	118.4
63"		77.3	116.0
66"		76.0	114.0
69"		74.9	112.3
72"		74.0	111.0
75"		73.3	110.0

PERFORMANCE VALUES OF ALUM BUCK INSTALLATION ANCHORS			
WINDOW DIMS.		ANCHORS AT 17" O.C.	ANCHORS AT 10" O.C.
WIDTH	HEIGHT	EXT. (+) INT. (−)	EXT. (+) INT. (−)
24"	96"	126.9	195.0
30"		105.2	175.4
36"		91.1	151.8
42"		81.2	135.3
48"		74.0	123.3
54"		68.6	114.4
57"		66.5	110.8
60"		64.6	107.6
63"		62.9	104.9
66"		61.5	102.5
24"	108"	129.5	195.0
30"		106.9	168.1
36"		92.1	144.7
42"		81.7	128.3
48"		74.0	116.3
54"		68.2	107.2
57"		65.8	103.5
60"		63.8	100.2
24"	120"	131.6	195.0
30"		108.3	162.4
36"		92.9	139.3
42"		82.0	123.0
48"		74.0	111.0
54"		67.9	101.8
24"	132"	133.2	192.4
30"		109.3	157.9
36"		93.5	135.0
42"		82.3	118.9
48"		74.0	106.9
24"	144"	121.1	195.0
30"		99.1	165.2
36"		84.6	141.0
42"		74.3	123.8
24"	156"	123.3	195.0
30"		100.8	161.2
36"		85.8	137.3

PERFORMANCE VALUES OF ALUM BUCK INSTALLATION ANCHORS			
WINDOW DIMS.		ANCHORS AT 17" O.C.	ANCHORS AT 10" O.C.
WIDTH	HEIGHT	EXT. (+) INT. (−)	EXT. (+) INT. (−)
19-1/8"	26"	195.0	195.0
26-1/2"		195.0	195.0
37"		195.0	195.0
53-1/8"		163.4	195.0
19-1/8"	38-3/8"	195.0	195.0
26-1/2"		192.1	195.5
37"		173.9	195.0
53-1/8"		130.9	195.0
19-1/8"	50-5/8"	195.0	195.0
26-1/2"		172.1	195.0
37"		143.4	179.3
53-1/8"		121.1	166.3
19-1/8"	63"	166.8	195.0
26-1/2"		129.3	195.0
37"		103.6	181.2
53-1/8"		88.1	154.1
19-1/8"	74-1/4"	172.3	195.0
26-1/2"		131.8	195.0
37"		103.3	165.3
53-1/8"		84.1	134.6

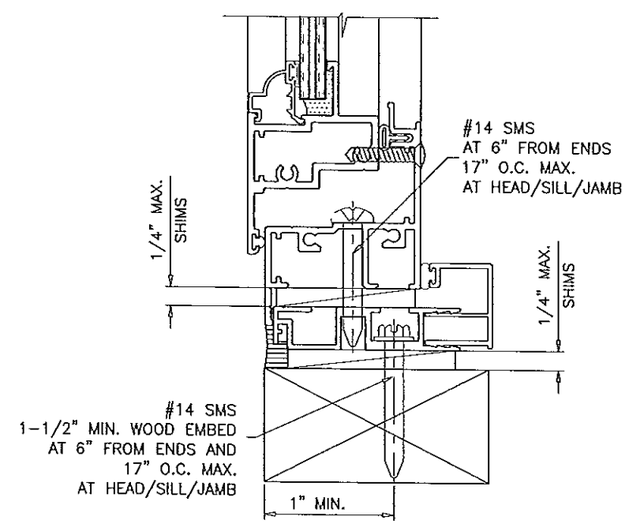

INSTALLATION TYPE '5'

2BY WOOD BUCK OR WOOD STRUCTURES

TYPICAL INSTALLATION DETAIL

ON ALL FOUR SIDES/USING ALUMINUM BUCK SYSTEM

NOTE:
INTERPOLATION BETWEEN SIZES ALLOWED.

ALUMINUM BUCK FRAMING DETAIL

REFER TO SHEETS 4 THRU 6 FOR WINDOW CAPACITIES
USE LOWER APPLICABLE VALUES.

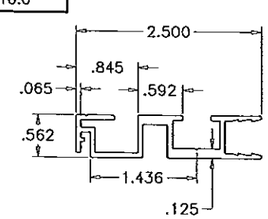

ALUMINUM BUCK

6063-T6

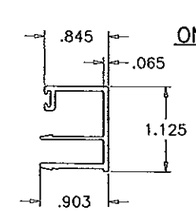

OPTIONAL COVER

6063-T6

Engr: JAVAD AHMAD
CIVIL
FLA. PE # 70592
C.A.N. 3538

AUG 20 2014

PRODUCT REVISED
as complying with the Florida
Building Code
Acceptance No 14-0903.06
Expiration Date Oct. 26, 2018
By Manuel Sera
Miami Dade Product Control

AL-FAROOQ CORPORATION
ENGINEERS & PRODUCT DEVELOPMENT
1235 S.W. 87 AVE
MIAMI, FLORIDA 33174
TEL. (305) 264-8100 FAX. (305) 262-6978

COMP-ANL\W99-10CGI

SERIES-238 ALUMINUM FIXED WINDOW (L.M.I.)

CGI WINDOWS & DOORS
10100 N.W. 25TH STREET
DORAL, FL. 33172
TEL. (305) 593-6590 FAX. (305) 593-6592

revisions:

no	date	by	description
F	10.07.08		GENERAL REV.
G	11.23.11		ANCHORS REV.
H	07.31.13		NO CHANGE THIS SHEET
I	08.18.14		UPDATED TO 2014 FBC

date: 02-19-99
scale: 1/2" = 1"
dr. by: HAMID
chk. by:

drawing no.
W99-10

PERFORMANCE VALUES ALUM BUCK INSTALLATION ANCHORS

WINDOW DIMS.		ANCHORS AT 17" O.C.	ANCHORS AT 10" O.C.
WIDTH	HEIGHT	EXT. (+) INT. (−)	EXT. (+) INT. (−)
24"	36"	159.0	195.0
30"		145.4	193.8
36"		141.3	188.4
42"		106.0	141.3
48"		113.1	141.3
54"		94.2	141.3
57"		87.0	130.5
60"		80.8	121.1
63"		75.4	131.9
66"		88.3	123.7
69"		83.1	116.4
72"		78.5	109.9
75"		74.4	119.0
78"		70.7	113.1
81"		80.8	107.7
84"		77.1	115.6
87"		73.7	110.6
24"	42"	127.2	169.6
30"		113.1	150.8
36"		106.0	141.3
42"		103.8	138.4
48"		103.8	134.6
54"		88.1	132.2
57"		80.8	121.1
60"		74.5	111.8
63"		69.2	121.1
66"		80.8	113.1
69"		75.7	106.0
72"		71.3	99.8
75"		67.3	107.7
78"		63.8	102.0
81"		72.7	96.9
84"		69.2	103.8
87"		66.1	99.1
24"	48"	141.3	176.7
30"		123.3	154.2
36"		113.1	141.3
42"		103.8	134.6
48"		106.0	132.5
54"		84.8	127.2
57"		77.1	115.6
60"		70.7	106.0
63"		65.2	114.2
66"		75.7	106.0
69"		70.7	98.9
72"		66.3	92.8
75"		62.4	99.8
78"		58.9	94.2
81"		66.9	89.3
84"		63.6	95.4
87"		60.6	90.9

PERFORMANCE VALUES ALUM BUCK INSTALLATION ANCHORS

WINDOW DIMS.		ANCHORS AT 17" O.C.	ANCHORS AT 10" O.C.
WIDTH	HEIGHT	EXT. (+) INT. (−)	EXT. (+) INT. (−)
24"	54"	121.1	181.7
30"		104.4	156.6
36"		94.2	141.3
42"		88.1	132.2
48"		84.8	127.2
54"		83.8	125.6
57"		75.4	113.1
60"		68.5	102.8
63"		62.8	109.9
66"		72.5	101.5
69"		67.3	94.2
72"		62.8	87.9
75"		58.9	94.2
78"		55.4	88.7
81"		62.8	83.8
84"		59.5	89.3
87"		56.5	84.8
24"	60"	106.0	159.0
30"		90.5	135.7
36"		80.8	121.1
42"		74.5	111.8
48"		70.7	106.0
54"		68.5	102.8
57"		68.0	102.0
60"		67.8	101.8
63"		61.7	101.8
66"		67.8	98.9
69"		65.2	91.3
72"		60.6	84.8
75"		56.5	90.5
78"		53.0	84.8
81"		59.9	79.8
84"		56.5	84.8
87"		53.6	80.3
24"	66"	117.8	164.9
30"		99.8	139.7
36"		88.3	123.7
42"		80.8	113.1
48"		75.7	106.0
54"		72.5	101.5
57"		71.4	100.0
60"		67.8	98.9
63"		61.5	98.3
66"		70.1	98.1
69"		64.2	89.9
72"		59.3	83.0
75"		55.1	88.1
78"		51.4	82.2
81"		57.8	77.1
84"		54.4	81.6
87"		51.4	77.1

PERFORMANCE VALUES ALUM BUCK INSTALLATION ANCHORS

WINDOW DIMS.		ANCHORS AT 17" O.C.	ANCHORS AT 10" O.C.
WIDTH	HEIGHT	EXT. (+) INT. (−)	EXT. (+) INT. (−)
24"	72"	106.0	148.4
30"		89.3	125.0
36"		78.5	109.9
42"		71.3	99.8
48"		66.3	92.8
54"		62.8	87.9
57"		61.6	86.2
60"		60.6	84.8
63"		59.8	83.8
66"		59.3	83.0
69"		59.0	82.6
72"		58.9	82.4
75"		54.4	82.4
78"		50.5	80.8
81"		56.5	75.4
84"		53.0	79.5
87"		49.9	74.8
24"	78"	96.4	154.2
30"		80.8	129.2
36"		70.7	113.1
42"		63.8	102.0
48"		58.9	94.2
54"		55.4	88.7
57"		54.1	86.6
60"		53.0	84.8
63"		52.1	83.4
66"		51.4	82.2
69"		50.9	81.4
72"		50.5	80.8
75"		50.3	80.4
78"		50.2	80.3
81"		50.2	74.5
24"	84"	106.0	159.0
30"		88.5	132.7
36"		77.1	115.6
42"		69.2	103.8
48"		63.6	95.4
54"		59.5	89.3
57"		57.9	86.9
60"		56.5	84.8
63"		55.4	83.1
66"		54.4	81.6
69"		53.6	80.4
72"		53.0	79.5
75"		52.5	78.8

PERFORMANCE VALUES ALUM BUCK INSTALLATION ANCHORS

WINDOW DIMS.		ANCHORS AT 17" O.C.	ANCHORS AT 10" O.C.
WIDTH	HEIGHT	EXT. (+) INT. (−)	EXT. (+) INT. (−)
24"	96"	90.9	151.4
30"		75.4	125.6
36"		65.2	108.7
42"		58.1	96.9
48"		53.0	88.3
54"		49.2	81.9
57"		47.6	79.3
60"		46.3	77.1
63"		45.1	75.1
66"		44.1	73.4
24"	108"	92.8	145.8
30"		76.6	120.4
36"		66.0	103.6
42"		58.5	91.9
48"		53.0	83.3
54"		48.9	76.8
57"		47.2	74.1
60"		45.7	71.8
24"	120"	94.2	141.3
30"		77.5	116.3
36"		66.5	99.8
42"		58.7	88.1
48"		53.0	79.5
54"		48.6	72.9
24"	132"	95.4	137.8
30"		78.3	113.1
36"		66.9	96.7
42"		58.9	85.1
48"		53.0	76.6
24"	144"	86.7	144.5
30"		71.0	118.3
36"		60.6	101.0
42"		53.2	88.6
24"	156"	88.3	141.3
30"		72.2	115.5
36"		61.4	98.3

PERFORMANCE VALUES ALUM BUCK INSTALLATION ANCHORS

WINDOW DIMS.		ANCHORS AT 17" O.C.	ANCHORS AT 10" O.C.
WIDTH	HEIGHT	EXT. (+) INT. (−)	EXT. (+) INT. (−)
19-1/8"	26"	194.2	195.0
26-1/2"		173.9	195.0
37"		146.8	195.0
53-1/8"		117.0	175.6
19-1/8"	38-3/8"	166.2	195.0
26-1/2"		137.6	183.4
37"		124.5	166.1
53-1/8"		93.8	140.6
19-1/8"	50-5/8"	155.5	194.4
26-1/2"		123.3	154.1
37"		102.7	128.4
53-1/8"		86.7	119.1
19-1/8"	63"	119.5	195.0
26-1/2"		92.6	162.1
37"		74.2	129.8
53-1/8"		63.1	110.4
19-1/8"	74-1/4"	123.4	195.0
26-1/2"		94.4	151.1
37"		74.0	118.4
53-1/8"		60.3	96.4

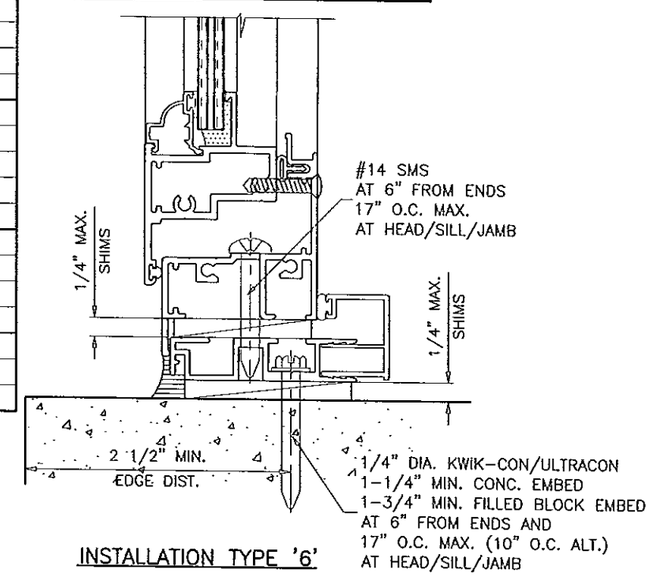

INSTALLATION TYPE '6'

TYPICAL INSTALLATION DETAIL
ON ALL FOUR SIDES/USING ALUMINUM BUCK SYSTEM

NOTE:
INTERPOLATION BETWEEN SIZES ALLOWED.

ALUMINUM BUCK FRAMING DETAIL

REFER TO SHEETS 4 THRU 6 FOR WINDOW CAPACITIES
USE LOWER APPLICABLE VALUES.

Engr: JAVAD AHMAD
CIVIL
FLA. PE # 70592
C.A.N. 3538

AUG 20 2014

PRODUCT REVISED
as complying with the Florida
Building Code
Acceptance No 14-0903.06
Expiration Date Oct. 26, 2018
By Manuel Perez
Miami Dade Product Control

AL-FAROOQ CORPORATION
ENGINEERS & PRODUCT DEVELOPMENT
1235 S.W. 87 AVE
MIAMI, FLORIDA 33174
TEL. (305) 264-8100 FAX. (305) 262-6978

COMP-ANL\W99-10CGI

SERIES-238 ALUMINUM FIXED WINDOW (L.M.I.)

CGI WINDOWS & DOORS
10100 N.W. 25TH STREET
DORAL, FL. 33172
TEL. (305) 593-6590 FAX. (305) 593-6592

revisions:

no	date	by	description
F	10.07.08		GENERAL REV.
G	11.23.11		NO CHANGE THIS SHEET
H	07.31.13		NO CHANGE THIS SHEET
I	08.18.14		UPDATED TO 2014 FBC

date: 02-19-99
scale: 1/2" = 1"
dr. by: HAMID
chk. by:

drawing no.
W99-10