MIAMI-DADE COUNTY
PRODUCT CONTROL SECTION
11805 SW 26 Street, Room 208
Miami, Florida 33175-2474
T (786) 315-2590 F (786) 315-2599
www.miamidade.gov/economy

DEPARTMENT OF REGULATORY AND ECONOMIC RESOURCES (RER)
BOARD AND CODE ADMINISTRATION DIVISION

NOTICE OF ACCEPTANCE (NOA)

Lawson Industries, Inc.
8501 N. W. 90th Street
Medley, FL 33166

SCOPE:

This NOA is being issued under the applicable rules and regulations governing the use of construction materials. The documentation submitted has been reviewed and accepted by Miami-Dade County RER -Product Control Section to be used in Miami Dade County and other areas where allowed by the Authority Having Jurisdiction (AHJ).

This NOA shall not be valid after the expiration date stated below. The Miami-Dade County Product Control Section (In Miami Dade County) and/or the AHJ (in areas other than Miami Dade County) reserve the right to have this product or material tested for quality assurance purposes. If this product or material fails to perform in the accepted manner, the manufacturer will incur the expense of such testing and the AHJ may immediately revoke, modify, or suspend the use of such product or material within their jurisdiction. RER reserves the right to revoke this acceptance, if it is determined by Miami-Dade County Product Control Section that this product or material fails to meet the requirements of the applicable building code.

This product is approved as described herein, and has been designed to comply with the Florida Building Code, including the High Velocity Hurricane Zone.

DESCRIPTION: Series "La Porte" Aluminum Outswing French Doors w/ Sidelites-Non Impact

APPROVAL DOCUMENT: Drawing No. **FD-1075.2 Rev #C**, titled "La Porte", Outswing French Door", sheets 1 through 6 of 6, prepared by the manufacturer, dated 05/05/99 and last revised on FEB 24, 2015, signed and sealed by Thomas J. Sotos, P.E., bearing the Miami-Dade County Product Control Revision stamp with the Notice of Acceptance number and expiration date by the Miami-Dade County Product Control Section.

MISSILE IMPACT RATING: None: Approved Hurricane Protection Devices Complying w/ FBC , as applicable, are required

Limitations:

1. See design Pressure chart and limitations in sheets 1.
2. See 5/16" Elco Ultracon specification in sheet 2. See Optional frame Head/jambs installation in sheet 6.
3. Glazing Vinyl item #12 shall meet material properties listed per compound 7200-75 & 7267-75 per sheet 5.
4. Applicable door egress requirement to be reviewed by Building official.

LABELING: Each unit shall bear a permanent label with the manufacturer's name or logo, city, state and series and following statement: "Miami-Dade County Product Control Approved", noted herein.

RENEWAL of this NOA shall be considered after a renewal application has been filed and there has been no change in the applicable building code negatively affecting the performance of this product.

TERMINATION of this NOA will occur after the expiration date or if there has been a revision or change in the materials, use, and/or manufacture of the product or process. Misuse of this NOA as an endorsement of any product, for sales, advertising or any other purposes shall automatically terminate this NOA. Failure to comply with any section of this NOA shall be cause for termination and removal of NOA.

ADVERTISEMENT: The NOA number preceded by the words Miami-Dade County, Florida, and followed by the expiration date may be displayed in advertising literature. If any portion of the NOA is displayed, then it shall be done in its entirety.

INSPECTION: A copy of this entire NOA shall be provided to the user by the manufacturer or its distributors and shall be available for inspection at the job site at the request of the Building Official.

This NOA **revises NOA # 12-0127.02** and consists of this page 1 and evidence pages E-1, as well as approval document mentioned above.

The submitted documentation was reviewed by **Ishaq I. Chanda, P.E.**

MIAMI-DADE COUNTY APPROVED

NOA No. 14-0908.06
Expiration Date: September 13, 2017
Approval Date: March 05, 2015

2/26/15

NOTICE OF ACCEPTANCE: EVIDENCE SUBMITTED

A. DRAWINGS

1. Manufacturer's die drawings and sections (Submitted under file **#12-0127.02/# 08-0513.07)**
2. Drawing No. **FD-1075.2 Rev #C**, titled "La Porte", Outswing French Door", sheets 1 through 6 of 6, prepared by the manufacturer, dated 05/05/99 and last revised on FEB 24, 2015, signed and sealed by Thomas J. Sotos, P.E.

B. TESTS (Submitted under file # **12-0127.02/# 08-0513.07)**

1. Test reports on: 1) Air Infiltration Test, per FBC, TAS 202-94
   2) Uniform Static Air Pressure Test, Loading per FBC TAS 202-94
   3) Water Resistance Test, per FBC, TAS 202-94
   4) Forced Entry Test, per FBC 2411 3.2.1, TAS 202-94

   Along with marked-up drawings and installation diagram of aluminum outswing French door (XX verification unit), prepared by Hurricane Engineering & Testing, Inc., Test Reports No. **HETI-07-2139** issued on 03-04-08 and revised & reissued on July 01, 2008, signed & sealed by Candido Font, P. E.
2. Test reports on: 1) Air Infiltration Test, per FBC, TAS 202-94
   2) Uniform Static Air Pressure Test, Loading per FBC TAS 202-94
   3) Water Resistance Test, per FBC, TAS 202-94
   4) Forced Entry Test, per FBC 2411 3.2.1, TAS 202-94

   Along with marked-up drawings and installation diagram of an aluminum French door w/ sidelites, prepared by Hurricane Engineering & Testing, Inc., Test Report No. **HETI-06-4017** issued on 08-04-06 & revised & reissued on 12/1106, signed & sealed by Rafael E. Droz-Seda, P. E.
3. Additional Test reports Test Reports No. **FTL-1291**, per SFBC, PA 202-94, issued on 12-27-95 and reissued on 07-26-1996 by Fenestration Testing lab.

C. CALCULATIONS

1. Statement letter dated 09/02/14 for compliance to FBC 2014, prepared, signed and sealed by Thomas J. Sotos, P. E
2. Anchor verification calculations dated 03/27/12, prepared, signed and sealed by Thomas J. Sotos, P. E. (Submitted under file # **12-0127.02**)
3. Comparative analysis calculation dated 07-01-08, prepared, signed and sealed by Thomas J. Sotos, P. E. (Submitted under file **# 08-0513.07**).
4. Glazing complies w/ ASTME-1300-02,-04 &-09.

D. QUALITY ASSURANCE

1. Miami–Dade Department of Regulatory and Economic Resources (RER).

E. MATERIAL CERTIFICATIONS

1. Technical data sheet of flexible vinyl compound BVC 7267-75 & BVC 7200-75, published by Bayshore Vinyl Compounds Inc.

F. STATEMENTS

1. Statement letter dated 09/02/2014 for compliance to FBC 2014 (5th edition), prepared, signed and sealed by Thomas J. Sotos, P. E.
2. Statement letter dated 03/27/12 of "product has not changed & No financial interest to lab", issued by Lawson Industries, both signed & sealed by Thomas J. Sotos, P. E.
3. Laboratory compliance statement, part of above referenced test reports.

G. OTHER

1. This NOA **revises** NOA # **12-0127.02**, expiring on Sep. 13, 2017.
2. Test proposals 02/27/07 & dated 11/15/05 approved by BCCO.

Ishaq I. Chanda

Ishaq I. Chanda, P.E.
Product Control Examiner
NOA No. 14-0908.06
Expiration Date: September 13, 2017
Approval Date: March 05, 2015

GENERAL NOTES:

1. THIS PRODUCT IS DESIGNED AS PER 2014 FLORIDA BUILDING CODE. ALSO FOR WIND LOADS AS PER ASCE 7 USING CORRESPONDING LOADS.
2. GLASS MEETS REQUIREMENTS OF ASTM-E1300 AS PER CHAPTER 24 OF THE 2014 FLORIDA BUILDING CODE.
3. 1X OR 2X WOOD BUCKS BY OTHERS, MUST BE ANCHORED PROPERLY TO TRANSFER LOADS TO THE STRUCTURE & TO BE REVIEWED BY BUILDING OFFICIAL.
4. ANCHORS SHALL BE AS LISTED, SPACED AS NOTED & SHOWN ON DETAILS. ANCHOR EMBEDMENT TO BASE MATERIAL SHALL BE BEYOND WALL DRESSING OR STUCCO. (SEE NOTES AT SHEET 2 OF 6)
5. ANCHORING OR LOADING CONDITIONS NOT SHOWN IN THESE DETAILS ARE NOT PART OF THIS APPROVAL.
6. SEE NOTES @ SHEET 2 OF 6 FOR INSTALLATION FASTENERS TYPE.
7. OPERABLE PANEL MUST MEET APPLICABLE REQUIREMENTS PER BUILDING CODE.
8. HURRICANE SHUTTERS ARE REQUIRED (HVHZ) AS PER FBC.
9. ALL DIMENSIONS ARE IN INCHES.
10. DOOR MAY BE GLAZED WITH 3/16" MONOLITHIC TEMPERED GLASS, OR WITH 1/2" INSULATED TEMPERED GLASS. (SEE GLAZING DETAILS AT SHEET 6 OF 6)
11. FOR INSTALLATIONS ON METAL STRUCTURES AND DIRECT TO CONCRETE SEE OPTIONAL FRAME INSTALLATION DETAILS AT SHEET 6 OF 6

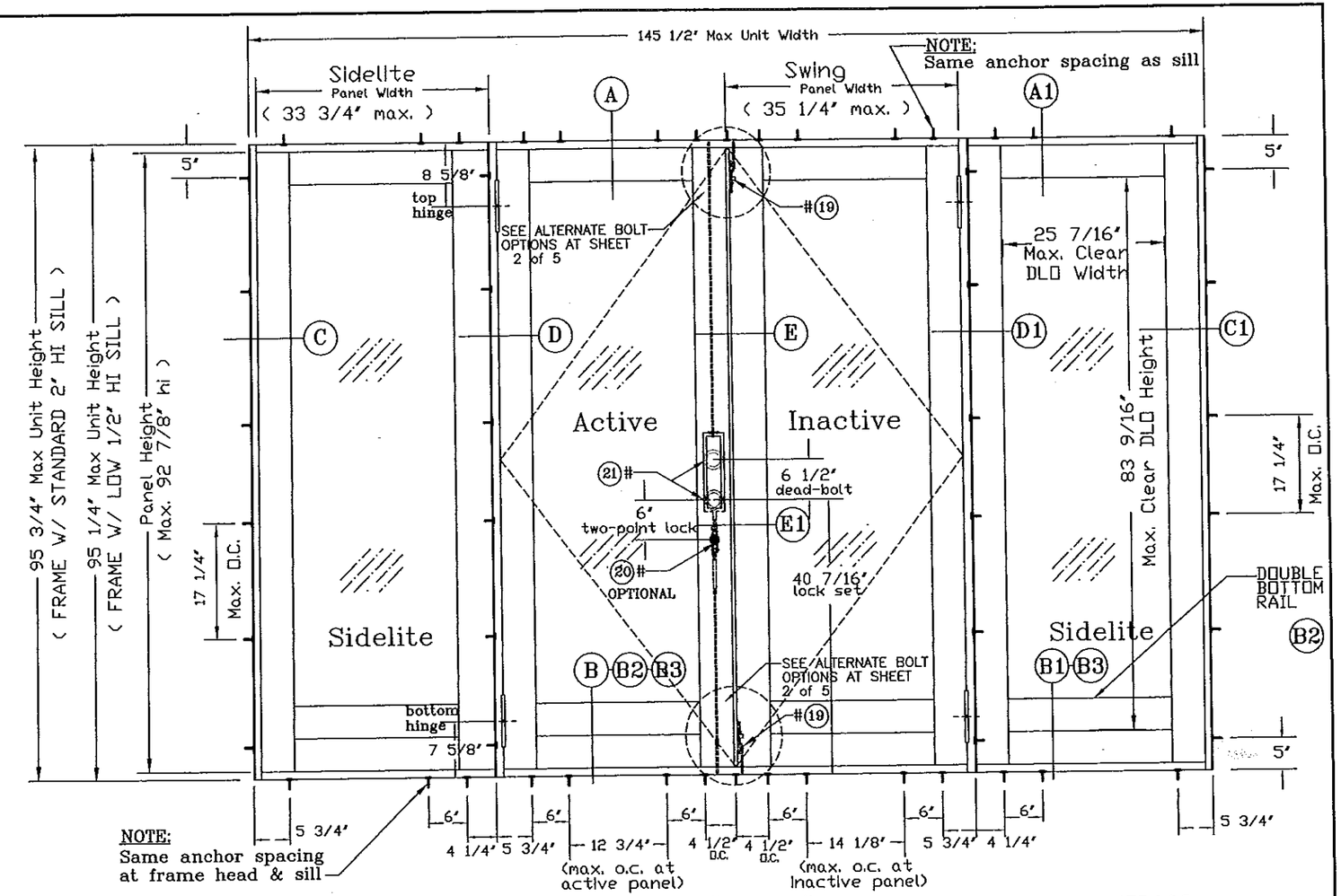

Series: LaPorte" FRENCH DOOR "OXXO" EXTERIOR ELEVATION

"LaPorte" FRENCH OUTSWING DOOR - DESIGN LOAD CHART					
DOOR NOMINAL SIZE	PANEL WIDTH/HEIGHT ACTUAL SIZE (INCHES)		NUMBER OF ANCHORS /JAMB	DP (PSF) **	
W. / H.	WIDTH *	HEIGHT *		EXTERIOR +(PSF)	INTERIOR -(PSF)
16 / 68 hi	16 3/8'	76 7/8'	*(5)	+60.00	-100.00
18 / 68 hi	22 3/8'			+60.00	-100.00
20 / 68 hi	24 3/8'			+60.00	-100.00
26 / 68 hi	28 3/8'			+60.00	-83.50
28 / 68 hi	30 3/8'			+60.00	-79.00
30 / 68 hi	34 3/8'			+60.00	-72.40
30E / 68 hi	35 1/4'			+60.00	-71.10
16 / 80 hi	16 3/8'	92 7/8'	*(6)	+60.00	-100.00
18 / 80 hi	22 3/8'			+60.00	-96.50
20 / 80 hi	24 3/8'			+60.00	-81.20
26 / 80 hi	28 3/8'			+60.00	-66.50
28 / 80 hi	30 3/8'			+60.00	-62.90
30 / 80 hi	34 3/8'			+57.10	-57.10
30E / 80 hi	35 1/4'			+56.00	-56.00

* OPERABLE PANEL MUST MEET APPLICABLE REQUIREMENTS PER BUILDING CODE.
* () PARENTHESIS INDICATES # OF ANCHORS AT FRAME JAMB.
* SEE LIMITATIONS

** LIMITATIONS:

1). MAX. DP = +60/-79.0 PSF W/ (2) Surface Bolts (Active Panel) & (2) Surface Bolts (Inactive).
2). MAX. DP = +60/-79.0 PSF W/ (1) Two-Point Lock (Active) & (2) Surface Bolts (Inactive).
3). MAX. DP = +60/-79.0 PSF W/ Flat Sill, where water infiltration is not required or opening is protected by overhang ratio greater than one.
4). All Lock Stiles must be equiped w/ Lock & Dead Bolt set (item #21).
5). When using Two-Point lock (item #20), Dead Bolt is not required.
6). Two-Point lock (#20) & Flush Bolts (#19) in Active Panel are optional. (SEE TWO-POINT LOCK & DEAD BOLT DETAILS @ SHEET 3 OF 6 & 4 OF 6)

PRODUCT REVISED
as complying with the Florida Building Code
Acceptance No. 14-0908.06
Expiration Date SEP 13, 2017
By Ichang I. Chang
Miami Dade Product Control

THOMAS J. SOTOS
PROFESSIONAL ENGINEER
FL LIC. # 55225
FEB 24 2015
DATE_____

Revision Notes:
A) REVISED TO COMPLY W/ 2004 FBC
ADDED 1/2" INSULATED GLASS
B) REVISED TO COMPLY W/ 2010 FBC
C) REVISED TO COMPLY W/ 2014 FBC

Drawn By: NELSON ERAZO	Date Drawn: 05-05-99
Revised By: NELSON ERAZO	Date Revised: 08-01-14
Reference:	Scale: 1/2"

LAWSON INDUSTRIES, INC.
8501 N.W. 90 ST.
MEDLEY, FLORIDA 33166
PH No. (305) 696-8660
MANUFACTURER OF QUALITY ALUMINUM WINDOWS AND GLASS DOORS

Draw Class:	Part Class:	Prod Category:	Series/Model:	Item:	Sheet:
LAYOUT		F.D.	"LaPORTE"		1 of 6

SERIES-"LaPORTE" OUTSWING FRENCH DOOR - FLUSH FRAME - NON-IMPACT
"OXXO" FRAME ELEVATION, GENERAL NOTES, AND DESIGN LOAD CHART

Part Number:	Drawing Number:	Revision Level:
ASSEMBLY\TEST UNIT\"LaPORTE"	FD-1075.2	C

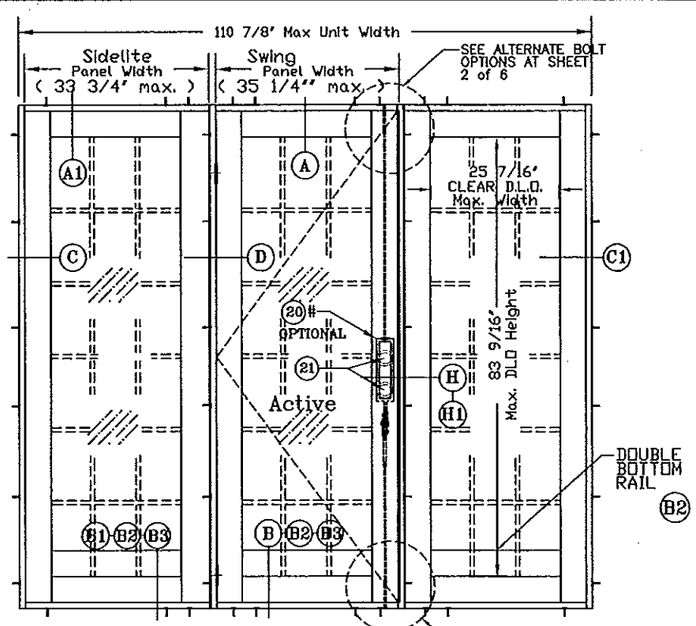

"OXO" ELEVATION

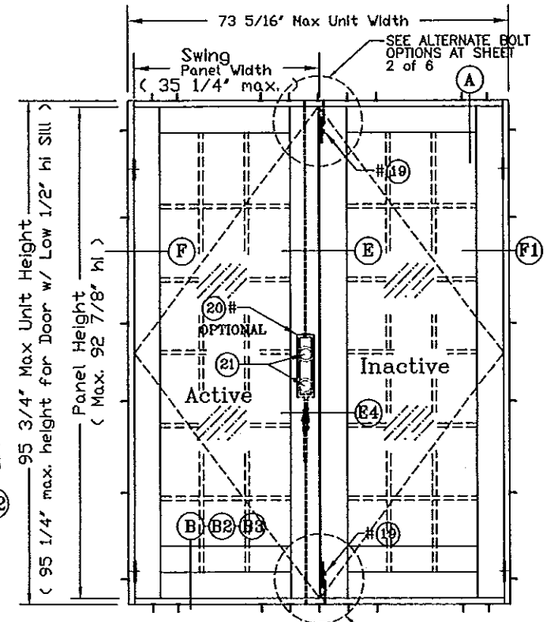

"XX" ELEVATION

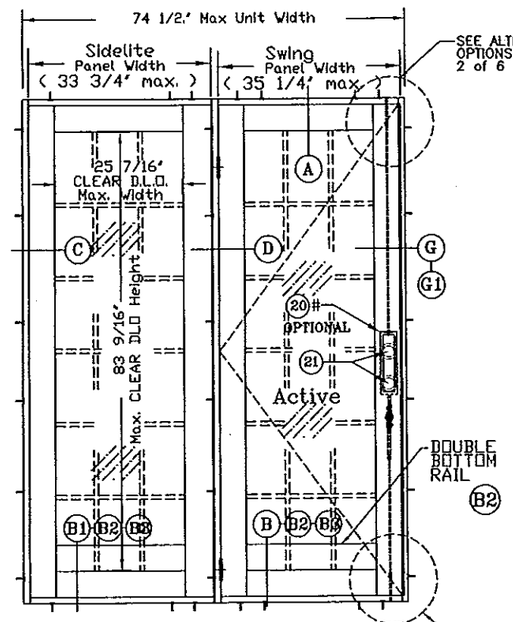

"OX" ELEVATION

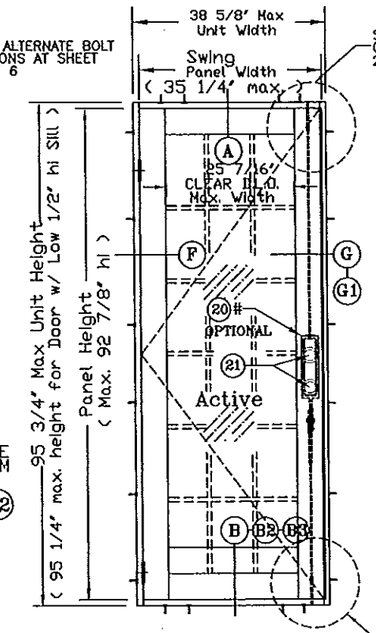

"X" ELEVATION

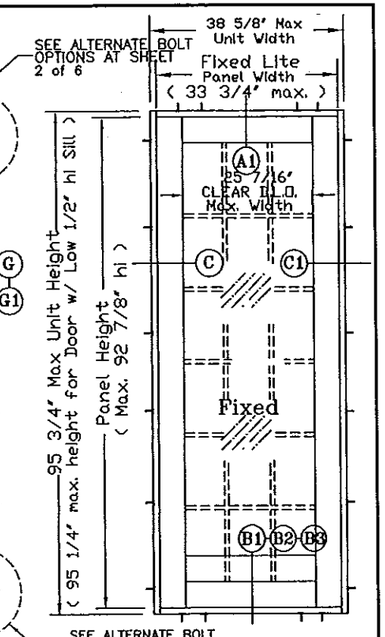

"O" ELEVATION

APPROVED CONFIGURATIONS

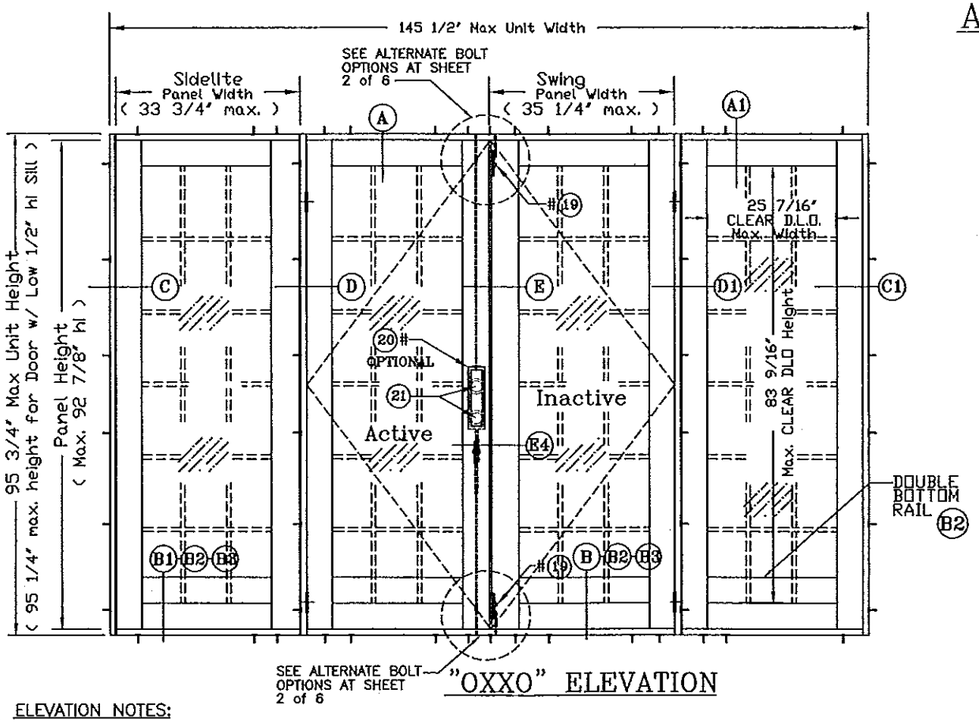

SEE ALTERNATE BOLT OPTIONS AT SHEET 2 of 6

"OXXO" ELEVATION

INSTALLATION FASTENERS NOTES:

"1X BUCK" MINIMUM REQUIRED FASTENER LENGTH
HEAD: 5/16" X 3 1/2" Long TAPCON(*)
JAMB: 5/16" X 2 3/4" Long TAPCON(*)
MULLIONS: 5/16" X 2 1/4" Long TAPCON(*)
(*) TAPCON BY "ELCO ULTRACON"

"2X BUCK" MINIMUM REQUIRED FASTENER LENGTH
HEAD: 5/16" X 3" Long TAPCON(*)
JAMB: 5/16" X 2 1/4" Long TAPCON(*)
MULLIONS: 5/16" X 2 1/4" Long TAPCON(*)
(*) TAPCON BY "ELCO ULTRACON"

AT SILL: 5/16" TAPCON w/ 1 1/2" MIN. EMBED. INTO 3500 PSI CONC. MIN.

NOTE:
ALL FASTENERS W/ 1 1/2" MIN. EMBEDMENT, 1 1/4" MIN. EDGE DISTANCE & 1/4" MAX. SHIM SPACE

ANCHOR YIELD STRENGTH Fy=155ksi
ANCHOR ULTIMATE STRENGTH Fu=177ksi

* ALL TAPCON LENGTHS "L" SPECIFIED ARE MINIMUMS (SEE ELEVATION AT SHEET 1 of 6 FOR ANCHOR MAX. SPACING AND LOCATIONS)

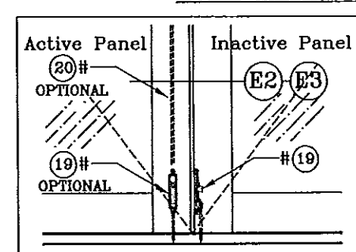

OPTIONAL BOLT @ BOTTOM RAIL

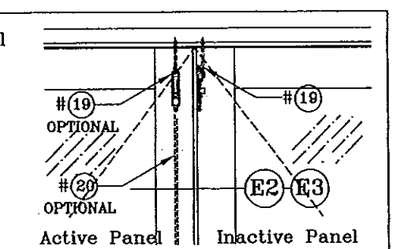

OPTIONAL BOLT @ TOP RAIL

FLUSH BOLT & TWO-POINT LOCK LIMITATIONS:
1). MAX. DP = +60.0 / -79.3 PSF W/ (2) Surface Bolts at Inactive Panel.
2). MAX. DP = +60.0 / -79.3 PSF W/ 2-Point Lock (active), + (2) Surface Bolts at Inactive Panel.
3). Two-Point lock (#20) & Flush Bolts (#19) in Active Panel are optional.

PRODUCT APPROVAL
as complying with the Florida Building Code
Application No. 14-0908.06
Expiration Date 9/13/17
By: Isheng L. Chang
Miami Dade Product Control

ELEVATION NOTES:
1. ALL ELEVATIONS ARE A GRAPHICAL REPRESENTATION VIEWED FROM THE EXTERIOR SIDE.
2. MAX. FRAME SIZE 145 1/2"w. X 95 3/4"h. (OXXO).
3. QUALIFIES UNITS WITH AND WITHOUT SIDELITES.
4. QUALIFIES SINGLE & MULTIPLE PANELS (SEE ELEVATIONS).
5. PANELS ARE QUALIFIED AND AVAILABLE WITH SINGLE BOTTOM RAIL OR DOUBLE BOTTOM RAILS.
6. EXT. & INT. FALSE COLONIAL MUNTINS ARE APPLIED W/ SILICONE AND ARE AVAILABLE AS OPTIONAL.
7. MAX. CLEAR DAYLITE OPENING: (25 7/16"w. X 83 9/16"h.).
8. OUT-SWING DOOR WITHOUT INSECT SCREEN.

THOMAS J. SOTOS
PROFESSIONAL ENGINEER
FL LIC. # 55225

DATE_____

Revision Notes: A) REVISED TO COMPLY W/ 2004 FBC	
ADDED 1/2" INSULATED GLASS	
B) REVISED TO COMPLY W/ 2010 FBC	
C) REVISED TO COMPLY W/ 2014 FBC	
Drawn By: NELSON ERAZO	Date Drawn: 05-05-99
Revised By: NELSON ERAZO	Date Revised: 08-01-14
Reference:	Scale: 1/2"

LAWSON INDUSTRIES, INC.
8501 N.W. 90 ST.
MEDLEY, FLORIDA 33166
PH No. (305) 696-8660
MANUFACTURER OF QUALITY ALUMINUM WINDOWS AND GLASS DOORS

Draw Class:	Part Class:	Prod Category:	Series/Model:	Item:	Sheet:
LAYOUT		F.D.	"LaPORTE"		2 of 6

SERIES-"LaPORTE" OUTSWING FRENCH DOOR - FLUSH FRAME - NON-IMPACT DOOR ELEVATIONS, & GENERAL NOTES

Part Number:	Drawing Number:	Revision Level:
ASSEMBLY\TEST UNIT\"LaPORTE"	FD-1075.2	C

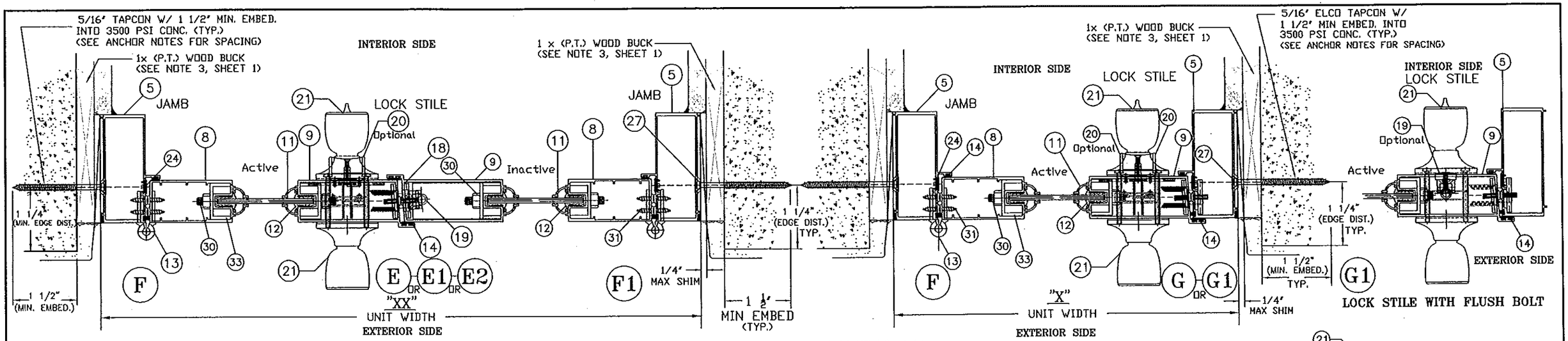

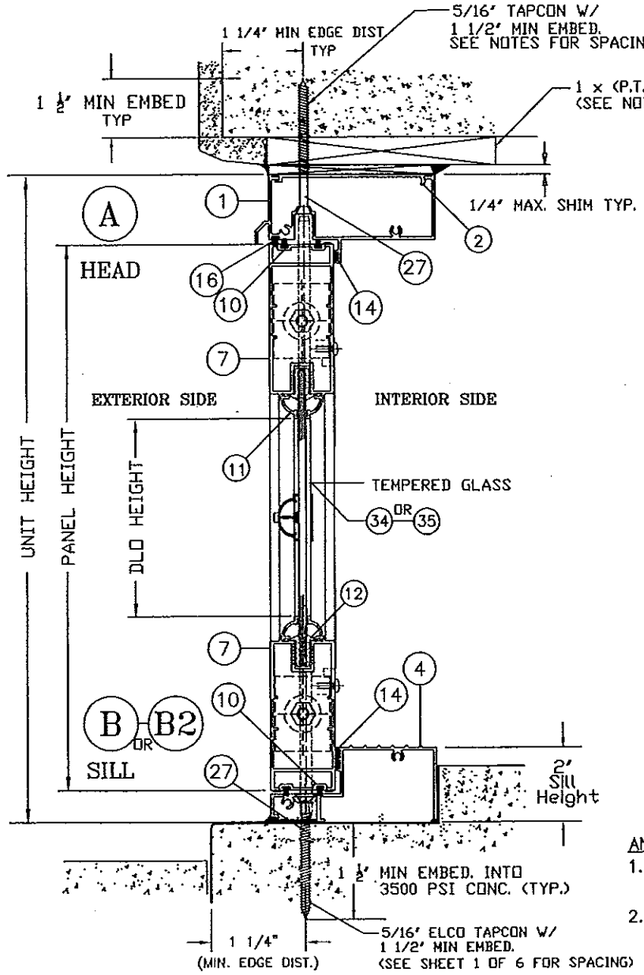

ANCHOR NOTES:

1. SEE ELEVATION AT SHEET 1 OF 6 FOR ANCHOR O.C. MAX. SPACING AND LOCATIONS.
2. SEE SHEET 2 OF 6 FOR INTALLATION FASTENERS TYPES.

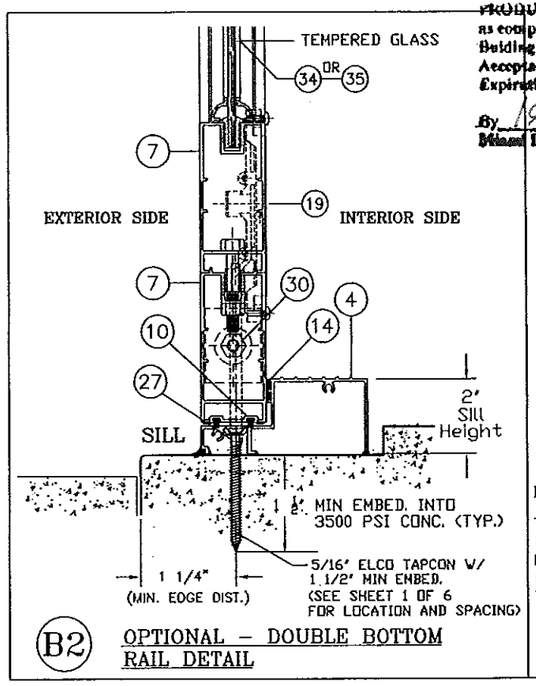

B2 OPTIONAL – DOUBLE BOTTOM RAIL DETAIL

PRODUCT REVISED
as complying with the Florida Building Code
Acceptance No. 14-0908.06
Expiration Date 9/13/17
By Sheng T. Chang
Miami Dade Product Control

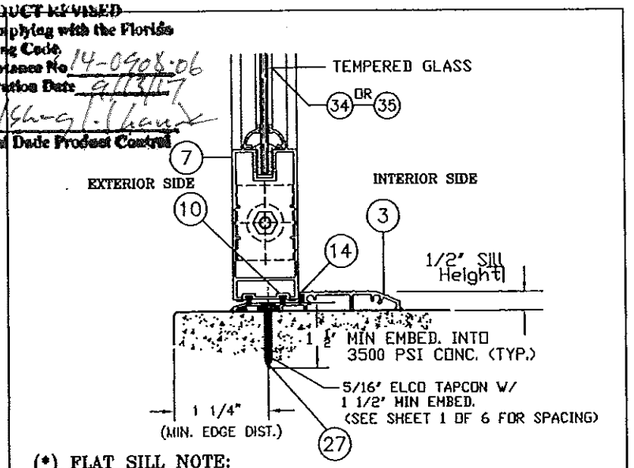

(*) FLAT SILL NOTE:

DOORS & SIDELITES WITH THIS SILL TO BE 95 1/4" MAX. FRAME HEIGHT.

THIS TYPE OF SILL IS LIMITED TO +60.0 & -79.3 psf DESIGN LOAD AND MUST BE USED WHERE WATER INFILTRATION IS NOT REQUIRED OR THE EXTERIOR OPENING IS PROTECTED WITH AN EXTENDED CEILING OR ROOF OVERHANG GREATER THAN OR EQUAL TO THE HEIGHT OF THE WALL WHERE THE DOOR IS LOCATED.

B3 (*) OPTIONAL SILL

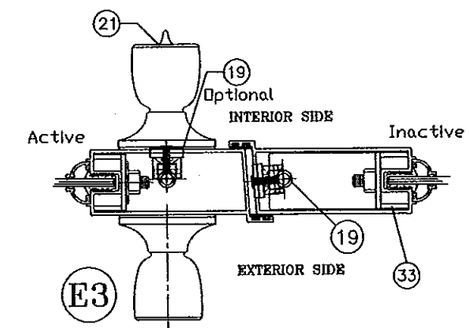

E3 LOCK STILES WITH LOCK SET AND FLUSH BOLT

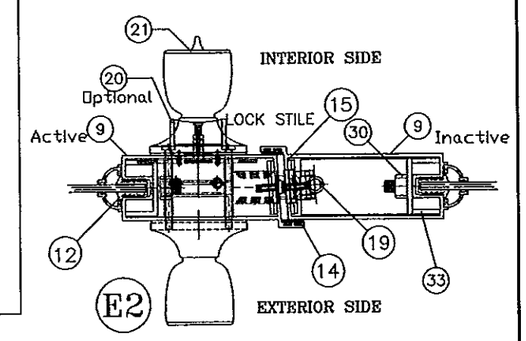

E2 LOCK STILES WITH LOCK SET, FLUSH BOLT AND TWO-POINT LOCK

THOMAS J. SOTOS
PROFESSIONAL ENGINEER
FL LIC. # 55225
STATE OF FLORIDA
FEB 24 2015
DATE_____

Revision Notes:	
A) REVISED TO COMPLY W/ 2004 FBC	
ADDED 1/2" INSULATED GLASS	
B) REVISED TO COMPLY W/ 2010 FBC	
C) REVISED TO COMPLY W/ 2014 FBC	
Drawn By: NELSON ERAZO	Date Drawn: 05-05-99
Revised By: NELSON ERAZO	Date Revised: 08-01-14
Reference:	Scale: 1/2"

LAWSON INDUSTRIES, INC.
8501 N.W. 90 ST.
MEDLEY, FLORIDA 33166
PH No. (305) 696-8660
MANUFACTURER OF QUALITY ALUMINUM WINDOWS AND GLASS DOORS

Draw Class:	Part Class:	Prod Category:	Series/Model:	Item:	Sheet:
LAYOUT		F.D.	"LaPORTE"		3 of 6

SERIES-"LaPORTE" OUTSWING FRENCH DOOR - FLUSH FRAME - NON-IMPACT
FRAME AND PANEL ASSEMBLY CROSS SECTIONS, DETAILS, & NOTES

Part Number:	Drawing Number:	Revision Level:
ASSEMBLY\TEST UNIT\"LaPORTE"	FD-1075.2	C

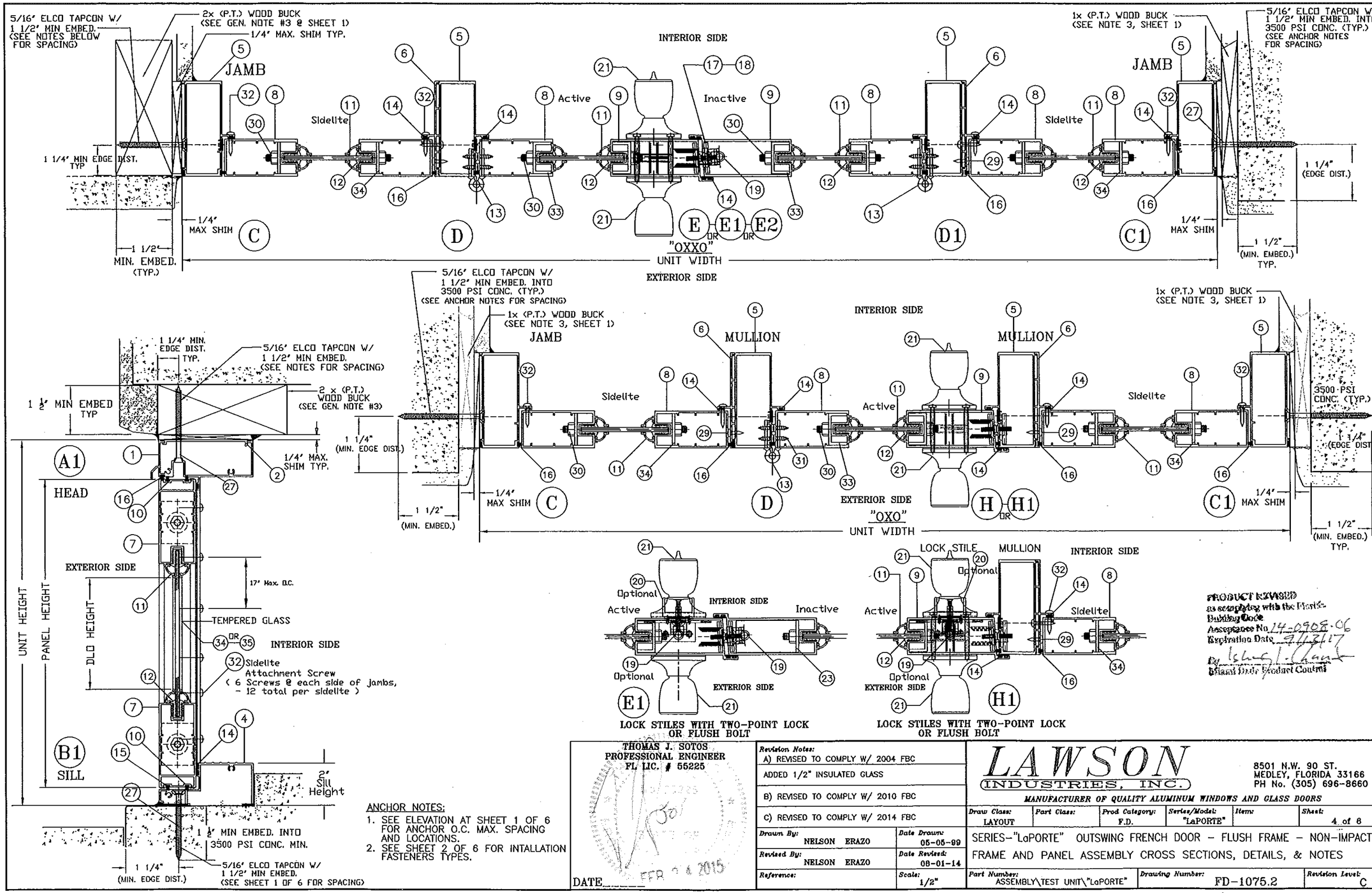

ANCHOR NOTES:

1. SEE ELEVATION AT SHEET 1 OF 6 FOR ANCHOR O.C. MAX. SPACING AND LOCATIONS.
2. SEE SHEET 2 OF 6 FOR INTALLATION FASTENERS TYPES.

PRODUCT REVISED as complying with the Florida Building Code
Acceptance No. 14-0908-06
Expiration Date 9/13/17
By Ishwaj I. Chand
Miami Dade Product Control

THOMAS J. SOTOS
PROFESSIONAL ENGINEER
FL LIC. # 55225

DATE FEB 2 4 2015

Revision Notes:	
A) REVISED TO COMPLY W/ 2004 FBC	
ADDED 1/2" INSULATED GLASS	
B) REVISED TO COMPLY W/ 2010 FBC	
C) REVISED TO COMPLY W/ 2014 FBC	
Drawn By: NELSON ERAZO	Date Drawn: 05-05-99
Revised By: NELSON ERAZO	Date Revised: 08-01-14
Reference:	Scale: 1/2"

LAWSON INDUSTRIES, INC.
8501 N.W. 90 ST.
MEDLEY, FLORIDA 33166
PH No. (305) 696-8660
MANUFACTURER OF QUALITY ALUMINUM WINDOWS AND GLASS DOORS

Draw Class:	Part Class:	Prod Category:	Series/Model:	Item:	Sheet:
LAYOUT		F.D.	"LaPORTE"		4 of 6

SERIES-"LaPORTE" OUTSWING FRENCH DOOR - FLUSH FRAME - NON-IMPACT FRAME AND PANEL ASSEMBLY CROSS SECTIONS, DETAILS, & NOTES

Part Number:	Drawing Number:	Revision Level:
ASSEMBLY\TEST UNIT\"LaPORTE"	FD-1075.2	C

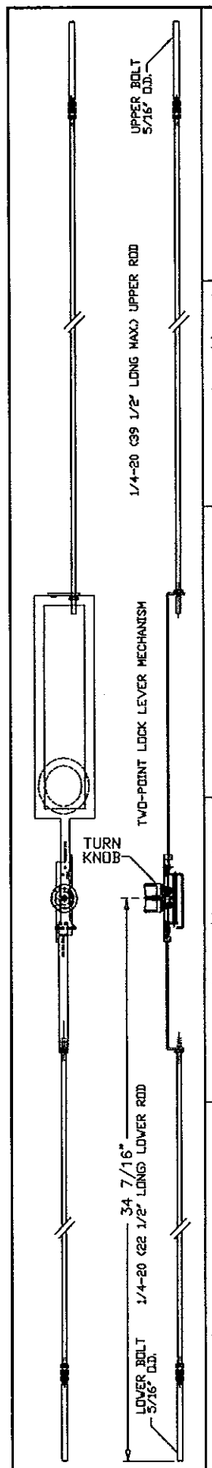

OPTIONAL TWO-POINT LOCK

(20) FLUSH BOLT #HC-050

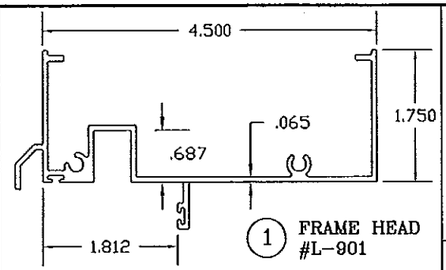

(1) FRAME HEAD #L-901

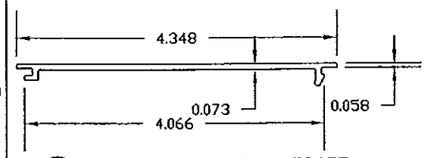

(2) FRAME HEAD SHEAR PLATE #L-915

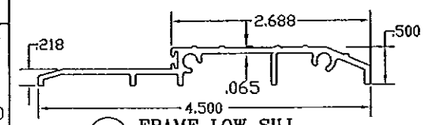

(3) FRAME LOW SILL #L-916

(*) NOTE:

REFER TO DETAIL 'B3' AT SHEET # 3 OF 5 FOR ADDITIONAL NOTES AND LIMITATIONS.

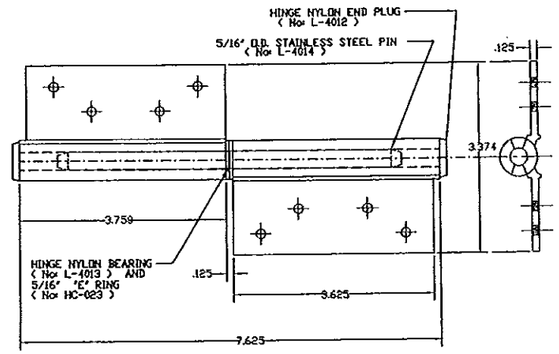

(13) HINGE ASSEMBLY DETAIL #FD-624-2

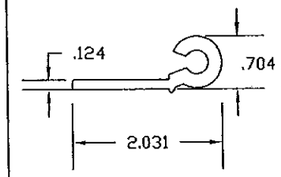

(13) HINGE LEAF #L-908

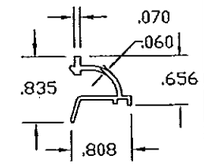

(39) QUARTER ROUND (1/4") BEAD #L-911

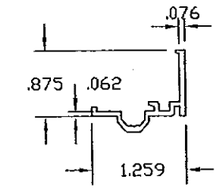

(37) GLAZING ADAPTER #L-910

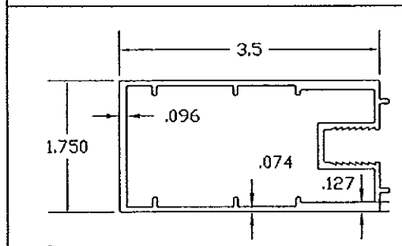

(8) PANEL HINGE STILE #L-907

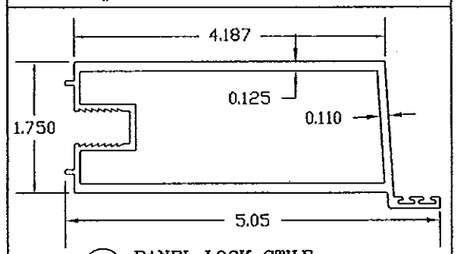

(9) PANEL LOCK STILE #L-905

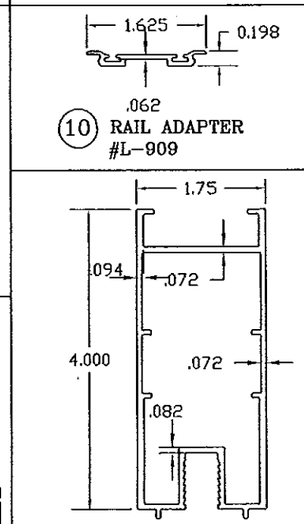

(7) PANEL TOP & BOTTOM RAIL #L-906

(10) RAIL ADAPTER #L-909

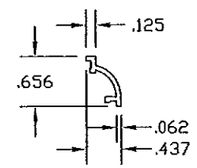

(11) QUARTER ROUND FALSE BEAD #FD-612

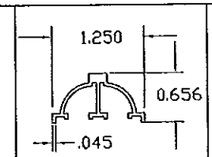

HALF ROUND FALSE MUNTIN (OPTIONAL) #L-913

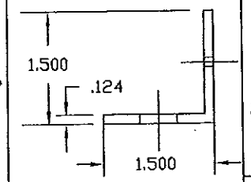

(22) FLUSH BOLT ANGLE GUIDE 1 1/2" LONG #FD-625-1

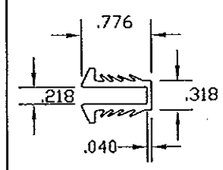

(12) GLAZING VINYL #L-1439

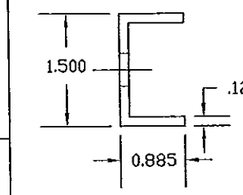

(33) SWING PANEL ALUMINUM "U" CLIP 1 15/16" LONG #L-630-1

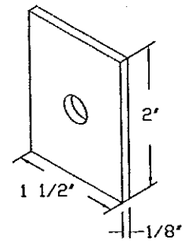

(34) SIDELITE PANEL ALUMINUM PLATE 2" LONG #HC-002

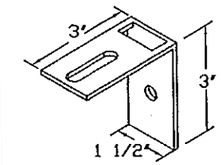

(23) TWO-POINT LOCK FLUSH BOLT ANGLE GUIDE #FD-627-1

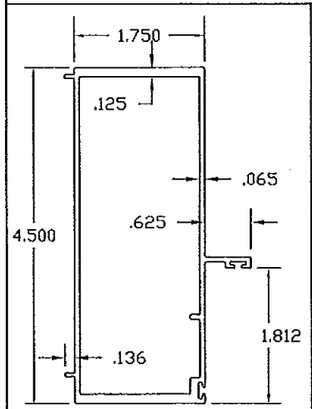

(5) FRAME JAMB #L-903

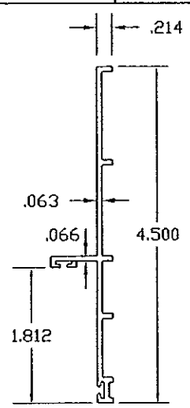

(6) JAMB ADAPTER #L-904

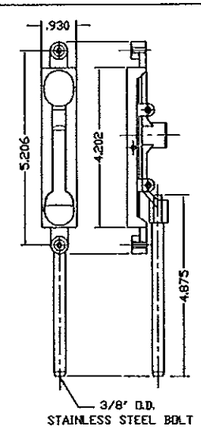

(19) FLUSH BOLT #HC-001

Flexible Vinyl (FPVC) Composition - Team Plastics, Inc.		
*1. FPVC Black: Compound No. 7200-75		
PHYSICAL		ASTM NO.
Durometer Hardness "A", 10 sec	75	D-2240
Specific Gravity	1.45	D-792
Tensile Strength, PSI	1640	D-638
Ultimate Elongation, %	340.0	D-638
Modulus @ 100% Elongation, PSI	765.0	D-638
Impact Brittleness,	-31.0	D-746
*2. FPVC White: Compound No. 7267-75		
PHYSICAL		ASTM NO.
Durometer Hardness "A", 10 sec	75	D-2240
Specific Gravity	1.45	D-792
Tensile Strength, PSI	1640	D-638
Ultimate Elongation, %	325.0	D-638
Modulus @ 100% Elongation, PSI	765.0	D-638
Impact Brittleness,	-30.0	D-746

NOTE:

1. ALL DIMENSIONS SPECIFIED IN INCHES.
2. SEE ELEVATION AT SHEET 1 OF 6 FOR ANCHOR O.C. MAX. SPACING AND LOCATIONS.

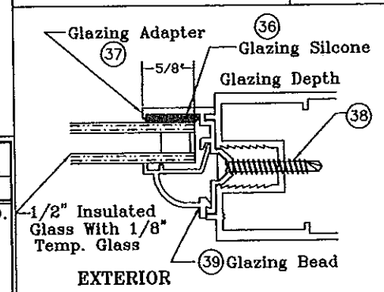

EXTERIOR

GLAZING DETAIL #2

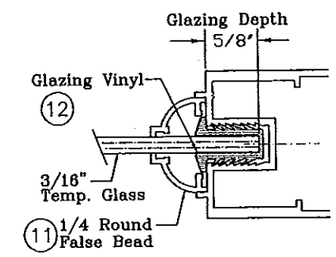

GLAZING DETAIL #1

PRODUCT REVISED
in complying with the Florida Building Code
Acceptance No. 14-0908.01
Expiration Date 9/13/17
By Miami Dade Product Control

INSULATED GLASS COMPOSITION		
ITEM	DESCRIPTION	DETAIL
1	1/8" TEMPERED GLASS	
2	1/4" INSULATED AIR SPACE	
3	1/8" TEMPERED GLASS	
4	INSULATED SPACER 'TruSeal' - Dura Seal Swiggle Spacer Pt.No. 812-25H-357 Black - 1/4" Air Space	

THOMAS J. SOTOS
PROFESSIONAL ENGINEER
FL LIC. # 55225

DATE 6/24/2015

Revision Notes:	
A) REVISED TO COMPLY W/ 2004 FBC	
ADDED 1/2" INSULATED GLASS	
B) REVISED TO COMPLY W/ 2010 FBC	
C) REVISED TO COMPLY W/ 2014 FBC	
Drawn By: NELSON ERAZO	Date Drawn: 05-05-99
Revised By: NELSON ERAZO	Date Revised: 08-01-14
Reference:	Scale: 1/2"

LAWSON INDUSTRIES, INC.

MANUFACTURER OF QUALITY ALUMINUM WINDOWS AND GLASS DOORS

8501 N.W. 90 ST.
MEDLEY, FLORIDA 33166
PH No. (305) 696-8660

Draw Class:	Part Class:	Prod Category:	Series/Model:	Item:	Sheet:
LAYOUT		F.D.	"LaPORTE"	TEST	5 of 6

SERIES-"LaPORTE" OUTSWING FRENCH DOOR - FLUSH FRAME - NON-IMPACT

EXTRUSIONS, COMPONENTS, NOTES, & GLAZING DETAILS

Part Number:	Drawing Number:	Revision Level:
ASSEMBLY\TEST UNIT\"LaPORTE"	FD-1075.2	C

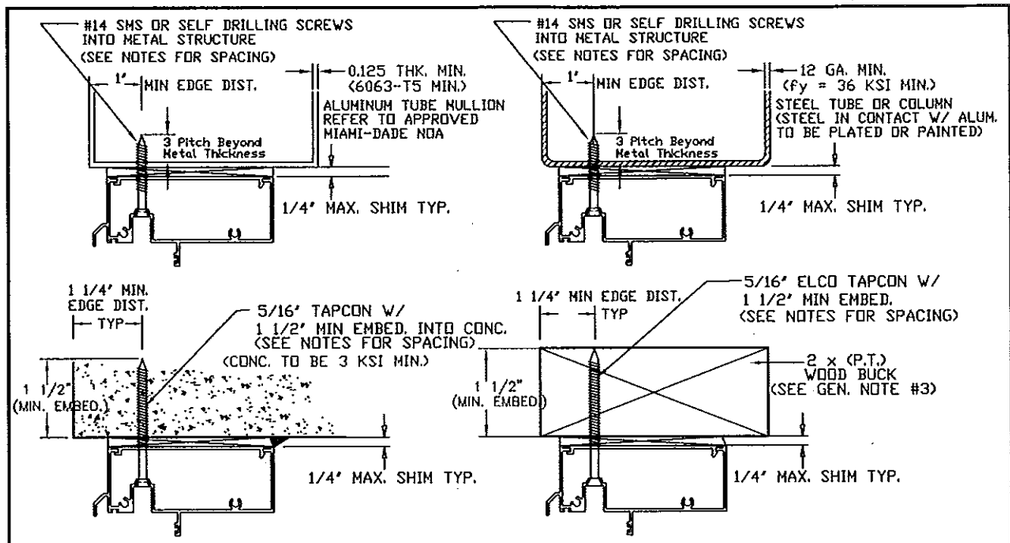

NOTE:
OPTIONAL INSTALLATION DETAILS MAY APPLY
TO DOOR FRAME JAMB AND/OR FRAME HEAD.
(TYP.)

FRAME INSTALLATION OPTIONAL DETAILS

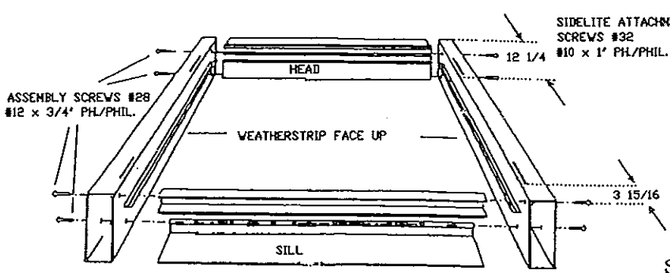

FRAME ASSEMBLY DETAIL

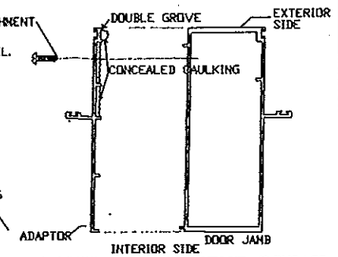

SIDELITE ATTACHMENT DETAIL

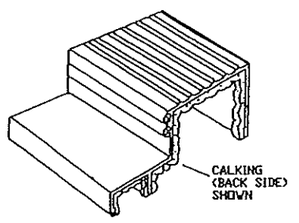

SILL SEALANT DETAIL

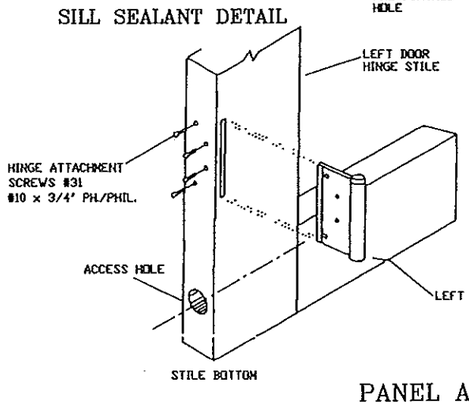

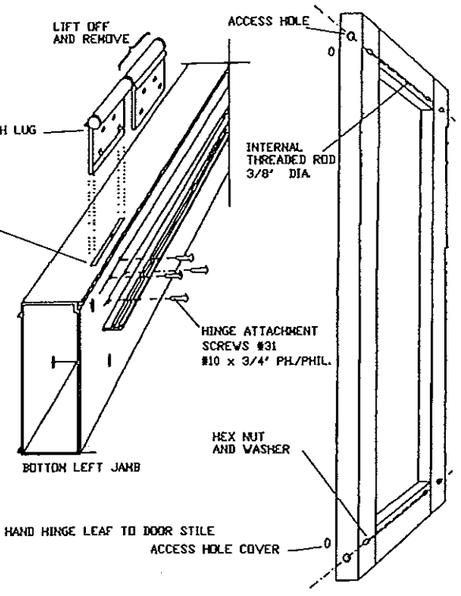

PANEL ASSEMBLY DETAIL

PRODUCT REVIEWED
as complying with the Florida
Building Code
Acceptance No. 14-0908.06
Expiration Date Sept 13, 2017
By Chang I. Chan
Miami Dade Product Control

BILL OF MATERIALS - NON-IMPACT OUTSIWNG FRENCH DOOR W/ SIDELITES

ITEM #	DRW'G #	PART #	REQD.	DESCRIPTION	REMARKS
1	L-901	LII-098	1	FRAME HEAD	6063-T6 ALUMINUM
2	L-915	LII-114	AS REQ'D.	FRAME HEAD SHEAR PLATE	6063-T5 ALUMINUM
3	L-916	LII-117	AS REQ'D.	FRAME LOW SILL - 1/2' HI	6063-T5 ALUMINUM
4	L-902	LII-097	1	FRAME SILL	6063-T5 ALUMINUM
5	L-903	LII-090	2	FRAME JAMB / MULLION	6063-T6 ALUMINUM
6	L-904	LII-096	2	SIDELITE JAMB ADAPTER	6063-T6 ALUMINUM
7	L-906	LII-092	2 x panel	PANEL TOP & BOTTOM RAIL	6063-T6 ALUMINUM
8	L-907	LII-091	1 x panel	HINGE STILE / FIXED STILE	6063-T6 ALUMINUM
9	L-905	LII-094	1 x panel	LOCK STILE	6063-T6 ALUMINUM
10	L-909	LII-095	2 x panel	TOP & BOTTOM RAIL ADAPTER	6063-T5 ALUMINUM
11	FD-612		AS REQ'D	1/4 ROUND ALUM. FALSE BEAD	6063-T5 ALUMINUM
12	L-1439	TP-884	AS REQD.	GLAZING VINYL -TEAM PLASTICS, INC.	See Material Composition at Sheet 5
13	FD-624-2	L-908	2 x panel	HINGE LEAF ASSEMBLY	6063-T5 ALUMINUM
14	VWS-001	TP 3286	AS REQ'D.	Bulb Vinyl Wts'p.-Team Plastics, Inc.	See Material Composition at Sheet 5
15	PWS-001	*	AS REQD.	WTS'P. @ TOP/BOTT. RAILS	Schlegel FS - .187'w. X .210'h.
16	PWS-002	*	AS REQD.	WTS'P. @ FRAME HEAD & JAMB	Schlegel PB - .187'w. X .330'h.
17	L-910	LII-089	2 x panel	STRIKER MOUNTING PLATE	6063-T5 ALUMINUM
18	FD-619	FD-619-1	2 x panel	STRIKER PLATE	6063-T5 ALUMINUM
19	HC-001	SF-5502	2	FLUSH BOLT	(@ TOP/BOTT. OF INACTIVE STILE)
20		HC-050	1	TWO-POINT BOLT LOCK	OPTIONAL or FLUSH BOLT (Item #19)
21	FD-621-2	HC-024/025	1 SET	DOOR LOCK / DEAD BOLT SET	KWIKSET, SCHLAGE, DEFIANT
22	*	FD-625-1	2/Panel	FLUSH BOLT GUIDE ALUM. ANGLE	1.5'x 1.5'x 1.375'x 1/8' ANGLE - 6063-T5
23	*	FD-627-1	2/Panel	TWO-POINT BOLT GUIDE ALUM. ANGLE	3'x 3'x 1 1/2'x 1/8' ANGLE - 6063-T5
24	*	HC-006	6/Jamb	1/2' Dia. Hole Plug - Nylon 6-6	Microplastics #62PP050BG14 - Rockwell M-79
25	*	HC-007	2/Panel	7/8' Dia. Hole Plug - Nylon 6-6	Microplastics #62PP087BG11 - Rockwell M-79
26	*	HC-010	1/BOLT	FLUSH BOLT SILL PLUG - Nylon 6-6	SUNCOPLASTICS Inc. - Rockwell M-79
27	*	*	AS REQ'D.	FRAME INSTALLATION SCREWS	(SEE NOTES AT SHEET 2 OF 6)
28	*	FS-026	8	FRAME ASSEMBLY SCREW	#12 X 3/4' PH.-PHI.
29	*	FS-012	AS REQ'D.	JAMB ADAPTER SCREW	#10 X 3/4' P.H.-PHI.
30	*	HC-004	2/Panel	Panel Ass'y Full Lenght Rod	3/8'Dia.-20D Rod, Plate, Flange Nut
31	*	FS-011	8	HINGE ATTACHMENT SCREW	#10 X 3/4' P.H. / PHI.
32	*	FS-044	12	SIDELITE ATTACHMENT SCREW	#10 X 1' PH/PHIL. - (17' OC Max.)
33	L-630-1	FD-931-2	4 X Panel	SWING PANEL ASS'Y 'U' CLIP	6063-T5 ALUMINUM
34	*	HC-002	4 X Panel	SIDELITE PANEL ASS'Y PLATE	6063 T5 ALUMINUM
35	*	*	AS REQ'D.	TEMPERED GLASS	SEE GLAZING DETAILS AT SHEET 6
36	*	*	AS REQ'D.	Glazing Silicone	SM-5731 & DC-899
37	L-914	*	AS REQD.	GLAZING ADAPTER	6063-T6 ALUMINUM
38	*	FS-043		ADAPTER ATTACHMENT SCREW	#8 X 1 1/4' SDS F.H. / PHI.
39	L-912	FD-612	AS REQ'D	1/4 ROUND ALUM. FALSE BEAD	6063-T5 ALUMINUM
40	*	SM-5504	AS REQ'D.	Joint Sealant	*
41	*	*	AS REQ'D.	FRAME PERIMETER CAULKING	EXTERIOR GRADE

THOMAS J. SOTOS
PROFESSIONAL ENGINEER
FL LIC. # 55225

DATE FEB 24 2015

Revision Notes: A) REVISED TO COMPLY W/ 2004 FBC	
ADDED 1/2" INSULATED GLASS	
B) REVISED TO COMPLY W/ 2010 FBC	
C) REVISED TO COMPLY W/ 2014 FBC	
Drawn By: NELSON ERAZO	Date Drawn: 05-05-99
Revised By: NELSON ERAZO	Date Revised: 08-01-14
References:	Scale: 1/2"

LAWSON INDUSTRIES, INC.
MANUFACTURER OF QUALITY ALUMINUM WINDOWS AND GLASS DOORS

8501 N.W. 90 ST.
MEDLEY, FLORIDA 33166
PH No. (305) 696-8660

Draw Class:	Part Class:	Prod Category:	Series/Model:	Item:	Sheet:
LAYOUT		F.D.	"LaPORTE"		6 of 6

SERIES-"LaPORTE" OUTSWING FRENCH DOOR - FLUSH FRAME - NON-IMPACT
FRAME ASSEMBLY DETAILS, BILL OF MATERIALS, & OPTIONAL DETAILS

Part Number:	Drawing Number:	Revision Level:
ASSEMBLY\TEST UNIT\"LaPORTE"	FD-1075.2	C