MIAMI-DADE COUNTY
DEPARTMENT OF REGULATORY AND ECONOMIC RESOURCES (RER)
BOARD AND CODE ADMINISTRATION DIVISION

MIAMI–DADE COUNTY, FLORIDA
PRODUCT CONTROL SECTION
11805 SW 26 Street, Room 208
T (786) 315–2590 F (786) 315–2599
www.miamidade.gov/economy

NOTICE OF ACCEPTANCE (NOA)

Lawson Industries, Inc.
8501 NW 90 Street
Medley, FL 33166

SCOPE:

This NOA is being issued under the applicable rules and regulations governing the use of construction materials. The documentation submitted has been reviewed and accepted by Miami–Dade County RER–Product Control Section to be used in Miami–Dade County and other areas where allowed by the Authority Having Jurisdiction (AHJ).

This NOA shall not be valid after the expiration date stated below. The Miami–Dade County Product Control Section (In Miami–Dade County) and/ or the AHJ (in areas other than Miami–Dade County) reserve the right to have this product or material tested for quality assurance purposes. If this product or material fails to perform in the accepted manner, the manufacturer will incur the expense of such testing and the AHJ may immediately revoke, modify, or suspend the use of such product or material within their jurisdiction. RER reserves the right to revoke this acceptance, if it is determined by Miami–Dade County Product Control Section that this product or material fails to meet the requirements of the applicable building code.

This product is approved as described herein, and has been designed to comply with the Florida Building Code, including the High Velocity Hurricane Zone.

DESCRIPTION: Clipped Extruded Aluminum Tube Mullion w/ and w/o Steel Reinforcement – L.M.I.

APPROVAL DOCUMENT: Drawing No. **LAW–ML–1001**, titled "Aluminum Tube Mullions" Sheets 01 through 10 of 10, dated 04/27/10 with revision "**B**" dated 08/01/14, prepared by manufacturer, signed and sealed by Thomas J. Sotos, P. E., bearing the Miami–Dade County Product Control Section Revision stamp with the Notice of Acceptance number and Expiration date by the Miami–Dade County Product Control Section.

MISSILE IMPACT RATING: Large and Small Missile Impact Resistant

LABELING: Each unit shall bear a permanent label with the manufacturer's name or logo, city, state, series, and following statement: "Miami–Dade County Product Control Approved", unless otherwise noted herein.

RENEWAL of this NOA shall be considered after a renewal application has been filed and there has been no change in the applicable building code negatively affecting the performance of this product.

TERMINATION of this NOA will occur after the expiration date or if there has been a revision or change in the materials, use, and/ or manufacture of the product or process. Misuse of this NOA as an endorsement of any product, for sales, advertising or any other purposes shall automatically terminate this NOA. Failure to comply with any section of this NOA shall be cause for termination and removal of NOA.

ADVERTISEMENT: The NOA number preceded by the words Miami–Dade County, Florida, and followed by the expiration date may be displayed in advertising literature. If any portion of the NOA is displayed, then it shall be done in its entirety.

INSPECTION: A copy of this entire NOA shall be provided to the user by the manufacturer or its distributors and shall be available for inspection at the job site at the request of the Building Official.

This NOA **revises NOA No. 12–0127.07** and consists of this page 1 and evidence pages E–1, E–2 and E–3, as well as approval document mentioned above.

The submitted documentation was reviewed by **Jaime D. Gascon, P. E.**

MIAMI-DADE COUNTY APPROVED

J Gascon
10/30/14

NOTICE OF ACCEPTANCE: EVIDENCE SUBMITTED

A. DRAWINGS

1. Manufacturer's die drawings and sections.
   (Submitted under previous NOA's No.'s 02–0501.05 and 95–1212.09)
2. Drawing No. **LAW–ML–1001**, titled "Aluminum Tube Mullions" Sheets 01 through 10 of 10, dated 04/27/10 with revision "**B**" dated 08/01/14, prepared by manufacturer, signed and sealed by Thomas J. Sotos, P. E.

B. TESTS

1. Tensile Test report on 0.10" thick wall aluminum tube mullion, prepared by Hurricane Engineering & Testing, Inc., Test Report No. **HETI–02–T071**, dated 09/16/02, tested per **ASTM E8,** signed and sealed by Rafael E. Droz–Seda, P. E.
   (Submitted under previous NOA No. 02–0501.05)
2. Test report on: 1) Uniform Static Air Pressure Test, Loading per FBC, TAS 202–94 along with marked–up drawings and installation diagram of 120" span aluminum tube mullions with C4 x 4.5 steel channel reinforcement, prepared by Hurricane Engineering & Testing, Inc., Test Report No. **HETI–02–1714**, dated 08/27/02, signed and sealed by Rafael E. Droz–Seda, P. E.
   (Submitted under previous NOA No. 02–0501.05)
3. Test report on: 1) Large Missile Impact Test per FBC, TAS 201–94.
   2) Cyclic Wind Pressure Loading per FBC, TAS 203–94
   along with marked–up drawings and installation diagram of 120–inch span aluminum tube mullions with C4 x 4.5 steel channel reinforcement, prepared by Hurricane Engineering & Testing, Inc., Test Report No. **HETI–02–1716**, dated 8/27/02, signed and sealed by Rafael E. Droz–Seda, P. E.
   (Submitted under previous NOA No. 02–0501.05)
4. Test report on: 1) Large Missile Impact Test per FBC, TAS 201–94.
   2) Cyclic Wind Pressure Loading per FBC, TAS 203–94
   along with marked–up drawings and installation diagram of an aluminum sliding glass door, prepared by Hurricane Engineering & Testing, Inc., Test Report No. **HETI–02–1718**, dated 8/27/02, signed and sealed by Rafael E. Droz–Seda, P. E.
   (Submitted under previous NOA No. 02–0501.05)
5. Test report on: 1) Uniform Static Air Pressure Test, Loading per FBC, TAS 202–94 along with marked–up drawings and installation diagram of an aluminum sliding glass door, prepared by Hurricane Engineering & Testing, Inc., Test Report No. **HETI–02–1717**, dated 08/27/02, signed and sealed by Rafael E. Droz–Seda, P. E.
   (Submitted under previous NOA No. 02–0501.05)

Jaime D. Gascon, P. E.
Product Control Section Supervisor
NOA No. 14–0908.08
Expiration Date: May 30, 2017
Approval Date: November 06, 2014

NOTICE OF ACCEPTANCE: EVIDENCE SUBMITTED

B. TESTS (CONTINUED)

6. Test report on: 1) Uniform Static Air Pressure Test, Loading per FBC, TAS 202–94 along with marked–up drawings and installation diagram of an aluminum sliding glass door, prepared by Fenestration Testing Laboratory, Inc., Test Report No. **FTL–1376**, dated 01/31/96, signed and sealed by Gilbert Diamond, P. E.
   (Submitted under previous NOA No. 95–1212.09)
7. Test report on: 1) Uniform Static Air Pressure Test, Loading per FBC, TAS 202–94 along with marked–up drawings and installation diagram of two aluminum horizontal sliding windows mulled at top with a 90–inch span mullion and a 45–inch high fixed window on top, prepared by Fenestration Testing Laboratory, Inc., Test Report No. **FTL–1383**, dated 02/13/96, signed and sealed by Gilbert Diamond, P. E.
   (Submitted under previous NOA No. 95–1212.09)

C. CALCULATIONS

1. Anchor verification calculations and structural analysis, complying with **FBC–2010**, prepared by manufacturer, dated 05/17/10 and updated on 01/25/12, prepared, signed and sealed by Thomas J. Sotos, P.E.
   (Submitted under previous NOA No. 12–0127.07)
2. **Glazing complies with ASTM E1300–04/ 09**

D. QUALITY ASSURANCE

1. Miami–Dade Department of Regulatory and Economic Resources (RER).

E. MATERIAL CERTIFICATIONS

1. None.

F. STATEMENTS

1. Statement letter of conformance to and complying with **FBC 5th Edition (2014)**, issued by manufacturer, dated 09/02/14, signed and sealed by Thomas J. Sotos, P. E.
2. Department of State Certification of **LAWSON INDUSTRIES, INC.** as a for profit corporation, active and organized under the laws of the State of Florida, dated 04/11/14 and filed at the Secretary of State.
3. Statement letter of conformance to and complying with **FBC–2010**, issued by manufacturer, dated 01/25/12, signed and sealed by Thomas J. Sotos, P. E.
   (Submitted under previous NOA No. 12–0127.07)
4. Statement letter of no financial interest, issued by manufacturer, dated 05/20/12, signed and sealed by Thomas J. Sotos, P. E.
   (Submitted under previous NOA No. 12–0127.07)

Jaime D. Gascon, P. E.
Product Control Section Supervisor
NOA No. 14–0908.08
Expiration Date: May 30, 2017
Approval Date: November 06, 2014

NOTICE OF ACCEPTANCE: EVIDENCE SUBMITTED

F. STATEMENTS (CONTINUED)

5. Notification of Successor Engineer for manufacturer's NOA document per **Section 61G15–27.001** of the **Florida Administrative Code**, notifying original engineer that the successor engineer is assuming full professional and legal responsibility for all engineering documents pertaining to the NOA's No.'s 06–0620.17 and 06–0620.18, dated 05/20/10, signed and sealed by Thomas J. Sotos, P. E.
   (Submitted under previous NOA No. 10–0610.02)
6. Laboratory compliance letter for Test Reports No.'s **HETI–02–1714**, **HETI–02–1716**, **HETI–02–1717**, **HETI–02–1718**, dated 8/27/02 and **HETI–02–T071**, dated 09/16/02, all issued by Hurricane Engineering & Testing, Inc., signed and sealed by Rafael E. Droz–Seda, P. E.
   (Submitted under previous NOA No. 02–0501.05)
7. Laboratory compliance letter for Test Reports No.'s **FTL—1376**, dated 01/31/96, and **FTL–1383**, dated 02/13/96, both issued by Fenestration Testing Laboratory, Inc., signed and sealed by Gilbert Diamond, P. E.
   (Submitted under previous NOA No. 02–0501.05)

G. OTHERS

1. Notice of Acceptance No. **12–0127.07**, issued to Lawson Industries, Inc. for their Series "Clipped Aluminum Tube Mullion w/ and w/o Steel Reinforcement – L.M.I.", approved on 03/29/12 and expiring on 05/30/17.

Jaime D. Gascon, P. E.
Product Control Section Supervisor
NOA No. 14–0908.08
Expiration Date: May 30, 2017
Approval Date: November 06, 2014

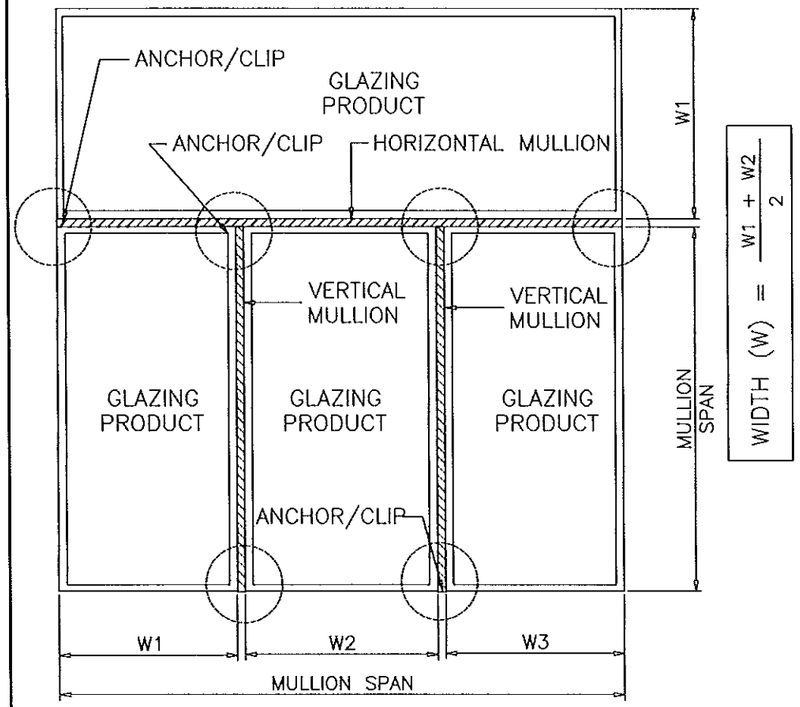

$$\text{WIDTH (W)} = \frac{W1 + W2 + W3}{2}$$

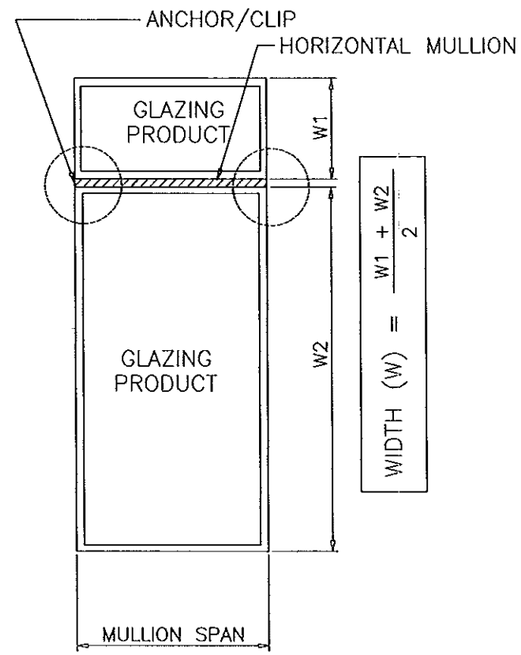

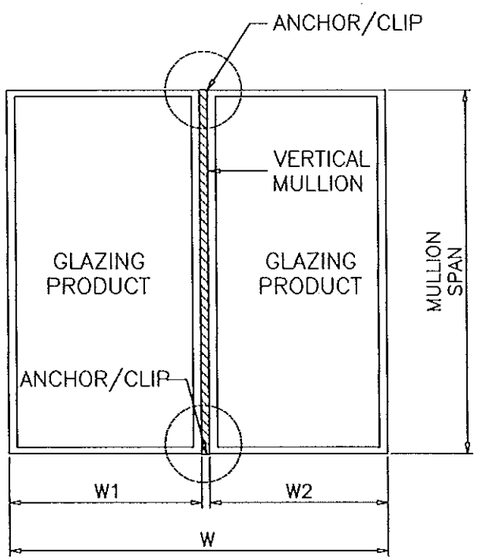

$$\text{WIDTH (W)} = \frac{W1 + W2}{2}$$

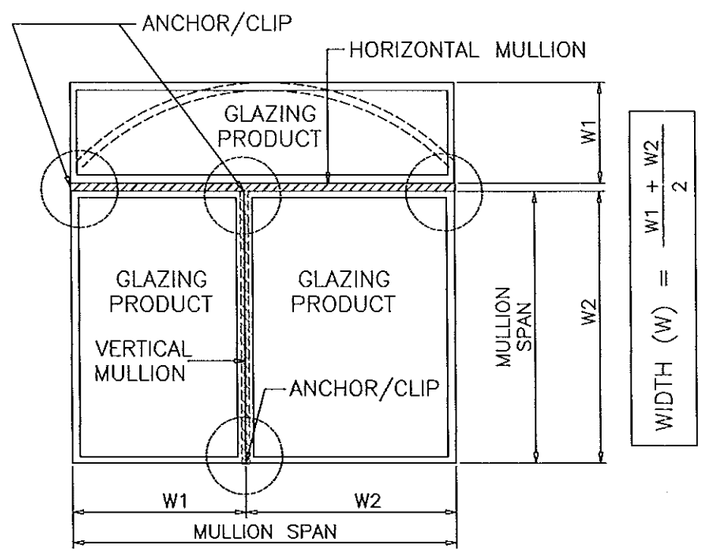

$$\text{WIDTH (W)} = \frac{W1 + W2}{2}$$

TYPICAL MULLION ARRANGEMENTS

THESE MULLIONS ARE RATED FOR LARGE MISSILE IMPACT AND CAN BE USED WITH ALL LAWSON'S MIAMI-DADE COUNTY APPROVED IMPACT AND NON-IMPACT PRODUCTS.

RECTANGULAR ALUMINUM TUBE MULLIONS USING MULLION PROPERTIES ONLY

GENERAL NOTES:

1. THIS PRODUCT HAS BEEN DESIGNED TO COMPLY WITH THE REQUIREMENTS OF THE FLORIDA BUILDING CODE 2014 EDITION INCLUDING HIGH VELOCITY HURRICANE ZONE (HVHZ).
2. ALL GLAZING PRODUCTS USED WITH THESE MULLIONS MUST MEET THE APPLICABLE FLORIDA BLDG. CODE REQUIREMENTS I.E: WIND LOAD, WATER INFILTRATION, FORCED ENTRY RESISTANCE, SAFEGUARDS ETC.
3. MULLIONS ARE APPROVED FOR IMPACT AND NON-IMPACT APPLICATIONS, INCLUDING WINDOWS, DOORS OR COMBINATIONS MAY BE MULLED.
4. WOOD BUCKS BY OTHERS, MUST BE ANCHORED PROPERLY TO TRANSFER LOADS TO THE STRUCTURE.
5. ANCHORS SHALL BE AS LISTED, SPACED AS SHOWN ON DETAILS, ANCHORS EMBEDMENT TO BASE MATERIAL SHALL BE BEYOND WALL DRESSING OR STUCCO.
6. ANCHORING OR LOADING CONDITIONS NOT SHOWN IN THESE DETAILS ARE NOT PART OF THIS APPROVAL.
7. A LOAD DURATION INCREASE IN ALLOWABLE STRESS IS USED IN DESIGN OF WOOD ANCHORS ONLY.
8. MATERIALS INCLUDING BUT NOT LIMITED TO STEEL OR METAL SCREWS, THAT COME INTO CONTACT WITH OTHER DISSIMILAR MATERIALS SHALL MEET THE REQUIREMENTS OF THE 2014 FLORIDA BLDG. CODE - SECTION 2003.8.4.

MULLION & CLIP NOTES:

1. FOR MULLIONS WITHOUT REINFORCEMENT REFER TO SHEET 2 OF 10 FOR DETAILS AND NOTES.
   * REFER TO SHEET 3 OF 10 FOR MAX. MULL DESIGN PRESSURE CHARTS
2. FOR MULLIONS WITH STEEL REINFORCEMENT REFER TO SHEET 4 OF 10 FOR DETAILS AND NOTES.
   * REFER TO SHEET 5 OF 10 FOR MAX. MULL DESIGN PRESSURE CHARTS
3. FOR CLIP TYPES AND ANCHOR CONDITIONS REFER TO SHEETS 6, 7, 8, & 9 OF 10 FOR DETAILS AND NOTES.
   * REFER TO SHEET 10 OF 10 FOR MAX. ANCHOR DESIGN PRESSURE CHARTS

PRODUCT REVISED
as complying with the Florida
Building Code
Acceptance No 14-0908.08
Expiration Date 05/30/2017
By
Miami Dade Product Control

LAWSON INDUSTRIES, INC.
8501 N.W. 90 ST.
MEDLEY, FLORIDA 33166
PH No. (305) 696-8660
MANUFACTURER OF QUALITY ALUMINUM WINDOWS AND GLASS DOORS

ALUMINUM TUBE MULLIONS
TYPICAL MULL ARRANGEMENTS, AND GENERAL NOTES

Revision Notes:
'A' - Revised date for the FBC-2010
'B' - Revised date for the FBC-2014

Drawn By: N. ERAZO — Date Drawn: 04/27/10
Revised By: N. ERAZO — Date Revised: 08/01/14
Revision Level: — Scale:
Product Reference Number: — Drawing Number: LAW-ML-1001 — Sheet: 1 OF 10 — Revision #: "B"

THOMAS J. SOTOS
PROFESSIONAL ENGINEER
FL LIC. # 55225
DATE SEP 2014

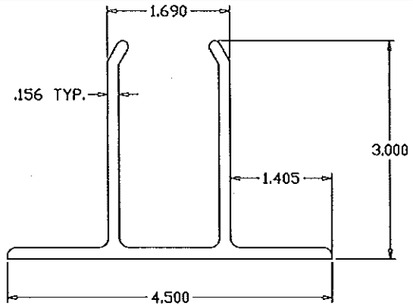

2X MULLION CLIP
6063–T6

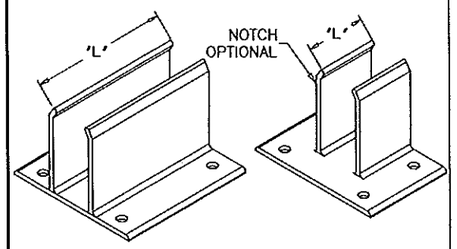

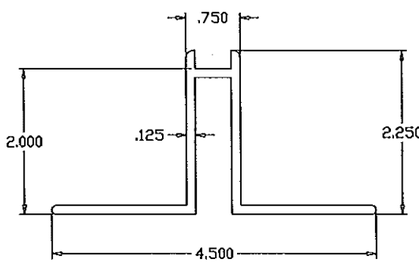

1X MULLION CLIP
6063–T6

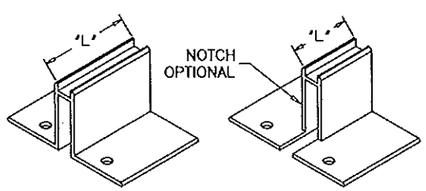

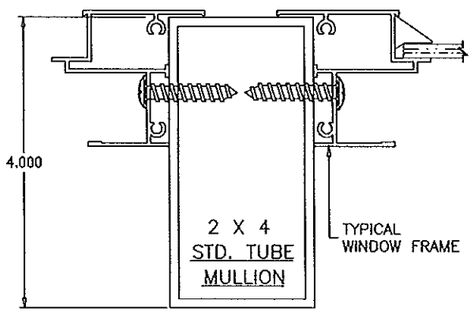

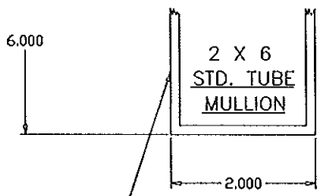

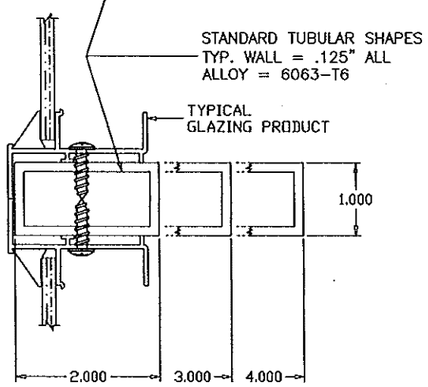

MULLIONS CONTAINING
TYPICAL GLAZING PRODUCTS
HORIZONTAL OR VERTICAL

SEE WINDOW OR DOOR APPROVAL FOR
FASTENERS SIZES AND SPACING

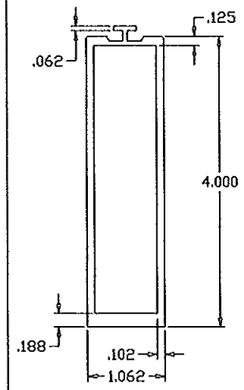

1 X 4
CUSTOM MULLION
6063–T6
Ixx: 2.070 in.^{4}
Sxx: 1.035 in.^{3}
(FLANGE FRAME)

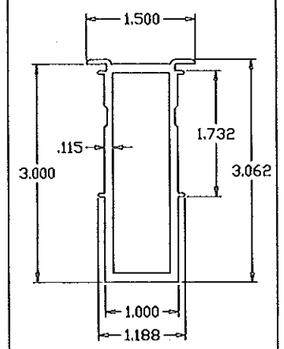

1 X 3
CUSTOM MULLION
6063–T6
Ixx: 1.000 in.^{4}
Sxx: 0.667 in.^{3}
(FIN FRAME)

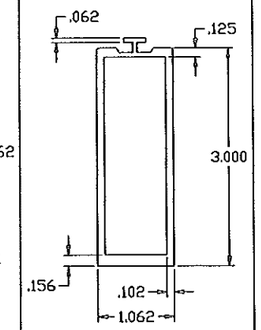

1 X 3
CUSTOM MULLION
6063–T6
Ixx: 0.950 in.^{4}
Sxx: 0.633 in.^{3}
(FLANGE FRAME)

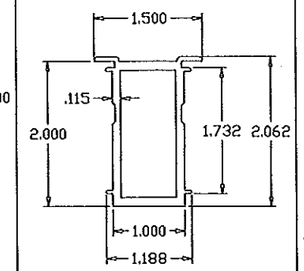

1 X 2
CUSTOM MULLION
6063–T6
Ixx: 0.370 in.^{4}
Sxx: 0.370 in.^{3}
(FIN FRAME)

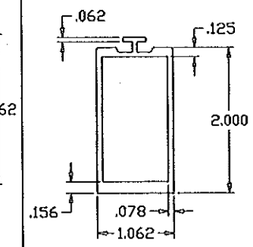

1 X 2
CUSTOM MULLION
6063–T6
Ixx: 0.330 in.^{4}
Sxx: 0.330 in.^{3}
(FLANGE FRAME)

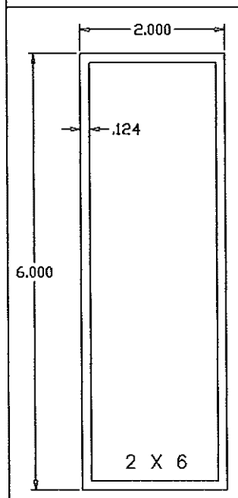

STD. TUBE MULLION
6063–T6
Ixx: 8.280 in.^{4}
Sxx: 2.760 in.^{3}

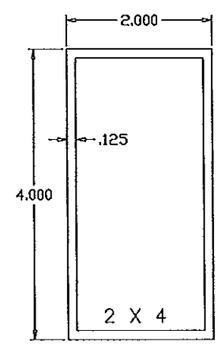

STD. TUBE MULLION
6063–T6
Ixx: 2.980 in.^{4}
Sxx: 1.490 in.^{3}

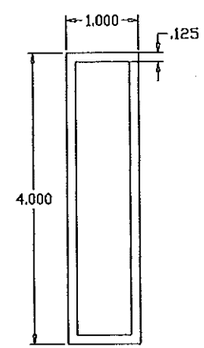

1 X 4
STD. TUBE MULLION
6063–T6
Ixx: 2.070 in.^{4}
Sxx: 1.035 in.^{3}

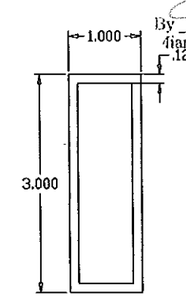

1 X 3
STD. TUBE MULLION
6063–T6
Ixx: 0.950 in.^{4}
Sxx: 0.633 in.^{3}

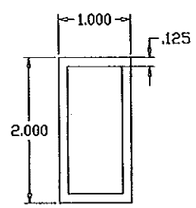

1 X 2
STD. TUBE MULLION
6063–T6
Ixx: 0.330 in.^{4}
Sxx: 0.330 in.^{3}

PRODUCT REVISED
as complying with the Florida
Building Code
Acceptance No. 14-0908.08
Expiration Date 05/30/2017
By
Miami Dade Product Control

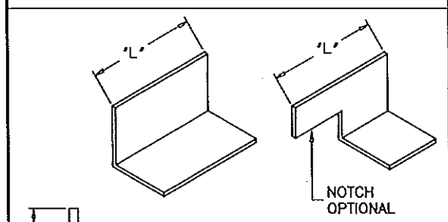

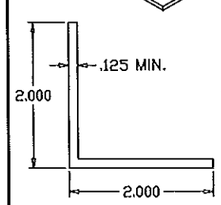

ANGLE CLIP
6063–T6

CLIP LENGTH	
MULL	"L"
1 X 2	1.688"
1 X 3	2.688"
1 X 4	3.688"
2 X 4	3.688"
2 X 6	5.688"

1. ALL CLIPS AND ANGLES ARE TO FIT SNUG INTO TUBE MULLIONS.
2. WHERE ANGLES ARE NOT FIT SNUG INTO TUBE MULLIONS, SEE OPTIONAL ANCHOR DETAIL AT SHEET 9 OF 10.

INSTRUCTIONS:

USE CHARTS AND GRAPHS AS FOLLOWS.

STEP 1 DETERMINE DESIGN LOAD REQUIRED FOR PARTICULAR OPENING.

STEP 2 USE APPROVED GLAZING PRODUCTS MEETING ABOVE LOAD REQUIREMENTS.

STEP 3 USE CONNECTION TO MULLION AS PER PRODUCT APPROVAL.

STEP 4 SPECIFY MAXIMUM SHIM SPACING.

STEP 5 USING CHARTS ON SHEET 3 OF 10 SELECT MULLION SIZE WITH DESIGN RATING MORE THAN DESIGN LOAD SPECIFIED IN STEP 1 ABOVE.

STEP 6 USING ANCHOR TYPES ON SHEET 6 THRU 9 AND ANCHOR CHARTS ON SHEET 9, SELECT ANCHOR TYPE WITH DESIGN RATING MORE THAN THE DESIGN LOADS SPECIFIED IN STEP 1 ABOVE.

RECTANGULAR ALUMINUM TUBE MULLIONS
USING MULLION PROPERTIES ONLY

THESE MULLIONS ARE RATED FOR LARGE MISSILE IMPACT AND CAN BE USED WITH ALL LAWSON'S MIAMI–DADE COUNTY APPROVED IMPACT AND NON–IMPACT PRODUCTS.

NOTES:

1. REFER TO THE GENERAL NOTES ON SHEET 1 OF 10 FOR BUILDING CODE COMPLIANCE.
2. MULLIONS MAY BE ORIENTED VERTICALLY OR HORIZONTALLY.
3. REFER TO SHEET 1 OF 10 FOR TYPICAL MULLION ARRANGEMENTS OR STACK CONFIGURATIONS.

LAWSON INDUSTRIES, INC.
8501 N.W. 90 ST.
MEDLEY, FLORIDA 33166
PH No. (305) 696–8660
MANUFACTURER OF QUALITY ALUMINUM WINDOWS AND GLASS DOORS

ALUMINUM TUBE MULLIONS
MULL AND CLIPS CROSS SECTIONS, AND GENERAL NOTES

Revision Notes:
'A' – No change this sheet
'B' – Revised date for the FBC–2014

Product Reference Number:
Drawing Number: LAW–ML–1001
Sheet: 2 OF 10
Revision #: "B"
Date Drawn: 04/27/10
Date Revised: 08/01/14
Scale:
Drawn By: N. ERAZO
Revised By: N. ERAZO
Revision Level:

THOMAS J. SOTOS
PROFESSIONAL ENGINEER
FL LIC. # 55225

SEP 2014

DATE

Width (w)	MULL SPAN	TUBE MULLIONS 1 X 2	1 X 3	1 X 4	2 X 4	2 X 6
18	38- 3/8"	150.0	150.0	150.0	150.0	150.0
24		150.0	150.0	150.0	150.0	150.0
30		123.0	150.0	150.0	150.0	150.0
36		102.5	150.0	150.0	150.0	150.0
42		87.9	150.0	150.0	150.0	150.0
48		76.9	150.0	150.0	150.0	150.0
54		68.3	137.6	150.0	150.0	150.0
60		61.5	123.9	150.0	150.0	150.0
66		55.9	112.6	150.0	150.0	150.0
72		51.3	103.2	150.0	150.0	150.0
78		47.3	95.3	150.0	150.0	150.0
18	50-5/8"	89.3	150.0	150.0	150.0	150.0
24		67.0	150.0	150.0	150.0	150.0
30		53.6	142.3	150.0	150.0	150.0
36		44.6	118.6	150.0	150.0	150.0
42		38.3	101.7	150.0	150.0	150.0
48		33.5	89.0	145.4	150.0	150.0
54		29.8	79.1	129.2	150.0	150.0
60		26.8	71.2	116.3	150.0	150.0
66		24.4	64.7	105.7	150.0	150.0
72		22.3	59.3	96.9	139.5	150.0
78		20.6	54.7	89.5	128.8	150.0
18	57"	62.6	150.0	150.0	150.0	150.0
24		46.9	135.1	150.0	150.0	150.0
30		37.5	108.1	150.0	150.0	150.0
36		31.3	90.1	150.0	150.0	150.0
42		26.8	77.2	131.1	150.0	150.0
48		23.5	67.5	114.7	150.0	150.0
54		20.9	60.0	101.9	146.8	150.0
60		18.8	54.0	91.7	132.1	150.0
66		17.1	49.1	83.4	120.1	150.0
72		15.6	45.0	76.5	110.1	150.0
78		-	41.6	70.6	101.6	150.0
18	63"	46.3	133.4	150.0	150.0	150.0
24		34.8	100.0	150.0	150.0	150.0
30		27.8	80.0	150.0	150.0	150.0
36		23.2	66.7	125.2	150.0	150.0
42		19.9	57.2	107.3	150.0	150.0
48		17.4	50.0	93.9	135.1	150.0
54		15.4	44.5	83.4	120.1	150.0
60		-	40.0	75.1	108.1	150.0
66		-	36.4	68.3	98.3	150.0
72		-	33.3	62.6	90.1	150.0
78		-	30.8	57.8	83.2	150.0

Width (w)	MULL SPAN	TUBE MULLIONS 1 X 2	1 X 3	1 X 4	2 X 4	2 X 6
18	74-1/4"	28.3	81.5	150.0	150.0	150.0
24		21.2	61.1	133.2	150.0	150.0
30		17.0	48.9	106.5	150.0	150.0
36		-	40.7	88.8	127.8	150.0
42		-	34.9	76.1	109.5	150.0
48		-	30.6	66.6	95.8	150.0
54		-	27.2	59.2	85.2	150.0
60		-	24.4	53.3	76.7	144.2
66		-	22.2	48.4	69.7	131.1
72		-	20.4	44.4	63.9	120.2
78		-	18.8	41.0	59.0	110.9
18	84"	-	56.3	122.6	150.0	150.0
24		-	42.2	92.0	132.4	150.0
30		-	33.8	73.6	105.9	150.0
36		-	28.1	61.3	88.3	150.0
42		-	24.1	52.6	75.7	150.0
48		-	21.1	46.0	66.2	140.8
54		-	18.8	40.9	58.8	125.2
60		-	16.9	36.8	53.0	112.7
66		-	15.3	33.4	48.1	102.4
72		-	-	30.7	44.1	93.9
78		-	-	28.3	40.7	86.7
18	96"	-	37.7	82.1	118.3	150.0
24		-	28.3	61.6	88.7	150.0
30		-	22.6	49.3	71.0	150.0
36		-	18.8	41.1	59.1	143.8
42		-	16.2	35.2	50.7	123.2
48		-	-	30.8	44.3	107.8
54		-	-	27.4	39.4	95.8
60		-	-	24.6	35.5	86.3
66		-	-	22.4	32.3	78.4
72		-	-	20.5	29.6	71.9
78		-	-	19.0	27.3	66.3
18	108"	-	26.5	57.7	83.1	150.0
24		-	19.9	43.3	62.3	150.0
30		-	15.9	34.6	49.8	136.3
36		-	-	28.8	41.5	113.6
42		-	-	24.7	35.6	97.4
48		-	-	21.6	31.1	85.2
54		-	-	19.2	27.7	75.7
60		-	-	17.3	24.9	68.1
66		-	-	15.7	22.7	62.0
72		-	-	-	20.8	56.8
78		-	-	-	19.2	52.4

Width (w)	MULL SPAN	TUBE MULLIONS 1 X 2	1 X 3	1 X 4	2 X 4	2 X 6
18	120"	-	19.3	42.1	60.5	150.0
24		-	-	31.5	45.4	126.2
30		-	-	25.2	36.3	100.9
36		-	-	21.0	30.3	84.1
42		-	-	18.0	25.9	72.1
48		-	-	15.8	22.7	63.1
54		-	-	-	20.2	56.1
60		-	-	-	18.2	50.5
66		-	-	-	16.5	45.9
72		-	-	-	15.1	42.1
78		-	-	-	-	38.8
18	132"	-	-	31.6	45.5	126.4
24		-	-	23.7	34.1	94.8
30		-	-	19.0	27.3	75.8
36		-	-	15.8	22.7	63.2
42		-	-	-	19.5	54.2
48		-	-	-	17.1	47.4
54		-	-	-	15.2	42.1
60		-	-	-	-	37.9
66		-	-	-	-	34.5
72		-	-	-	-	31.6
78		-	-	-	-	29.2
18	144"	-	-	24.3	35.0	97.4
24		-	-	18.3	26.3	73.0
30		-	-	-	21.0	58.4
36		-	-	-	17.5	48.7
42		-	-	-	15.0	41.7
48		-	-	-	-	36.5
54		-	-	-	-	32.5
60		-	-	-	-	29.2
66		-	-	-	-	26.6
72		-	-	-	-	24.3
78		-	-	-	-	22.5
18	150"	-	-	-	31.0	86.1
24		-	-	-	23.3	64.6
30		-	-	-	18.6	51.7
36		-	-	-	15.5	43.1
42		-	-	-	-	36.9
48		-	-	-	-	32.3
54		-	-	-	-	28.7
60		-	-	-	-	25.8
66		-	-	-	-	23.5
72		-	-	-	-	21.5
78		-	-	-	-	19.9

LAWSON INDUSTRIES, INC.
8501 N.W. 90 ST.
MEDLEY, FLORIDA 33166
PH No. (305) 696-8660

MANUFACTURER OF QUALITY ALUMINUM WINDOWS AND GLASS DOORS

ALUMINUM TUBE MULLIONS

UNREINFORCED TUBE MULLIONS DESIGN PRESSURE CHARTS AND GENERAL NOTES

Revision #: "B"
Sheet: 3 OF 10
Drawing Number: LAW-ML-1001
Product Reference Number:

Revision Notes:
"A" - No change this sheet
"B" - Revised date for the FBC-2014

Date Drawn: 04/27/10
Date Revised: 08/01/14
Scale:
Drawn By: N. ERAZO
Revised By: N. ERAZO
Revision Level:

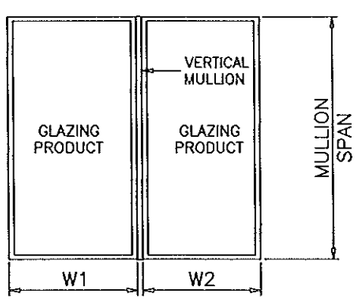

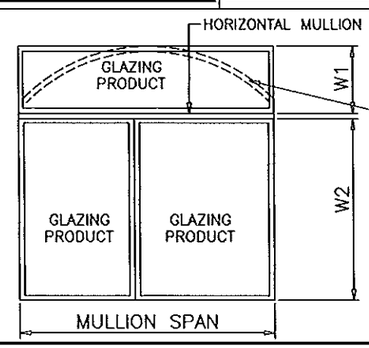

TYPICAL MULLION ARRANGEMENTS

NOTE:
MULLIONS RATED IN THESE CHARTS MAY BE ORIENTED VERTICALLY OR HORIZONTALLY.
(INTERPOLATION BETWEEN WIDTHS ALLOWED)

$$\text{WIDTH (W)} = \frac{W1 + W2}{2}$$

PRODUCT REVISED
as complying with the Florida
Building Code
Acceptance No 14-0908.08
Expiration Date 05/30/2017
By
Miami Dade Product Control

THOMAS J. SOTOS
PROFESSIONAL ENGINEER
FL LIC. # 55225

DATE

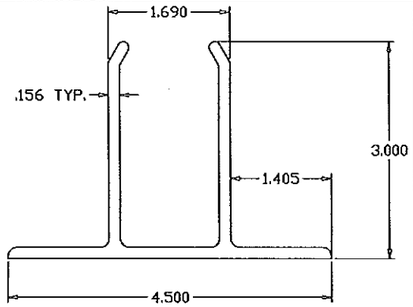

2X MULLION CLIP
6063–T6

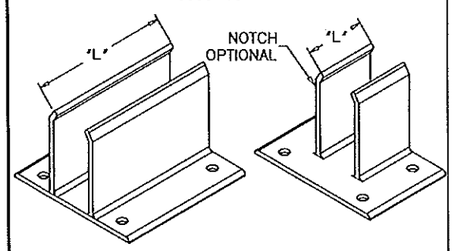

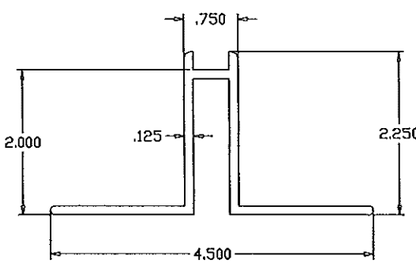

1X MULLION CLIP
6063–T6

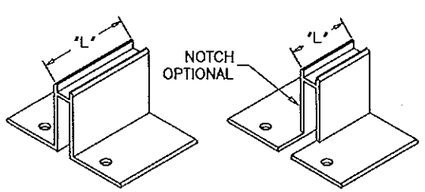

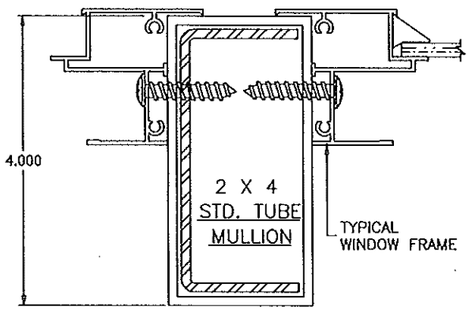

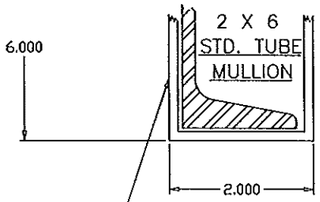

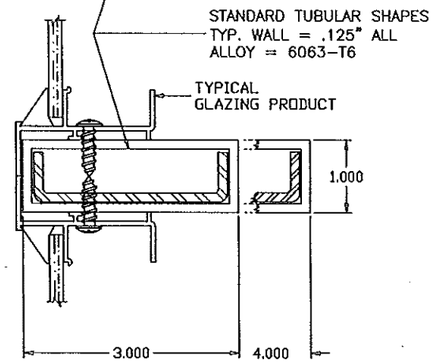

MULLIONS CONTAINING
TYPICAL GLAZING PRODUCTS
HORIZONTAL OR VERTICAL

SEE WINDOW OR DOOR APPROVAL FOR
FASTENERS SIZES AND SPACING

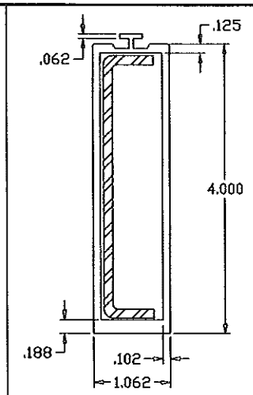

1 X 4
CUSTOM MULLION
6063–T6

Ixx: 4.709 in^4
Sxx: 2.355 in^3
(FLANGE FRAME)

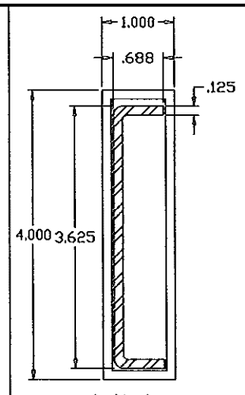

1 X 4
STD. TUBE MULLION
6063–T6

Ixx: 4.709 in^4
Sxx: 2.355 in^3

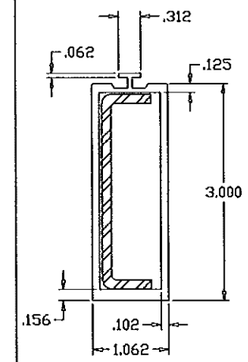

1 X 3
CUSTOM MULLION
6063–T6

Ixx: 2.168 in^4
Sxx: 1.445 in^3
(FLANGE FRAME)

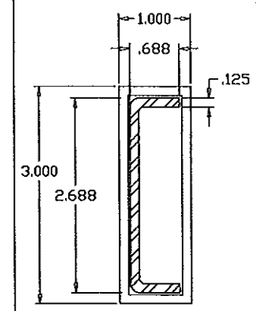

1 X 3
STD. TUBE MULLION
6063–T6

Ixx: 2.168 in^4
Sxx: 1.445 in^3

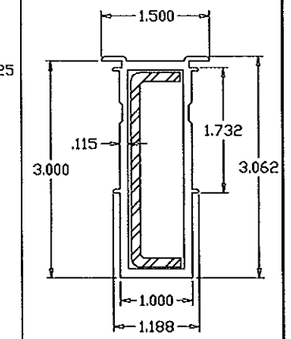

1 X 3
CUSTOM MULLION
6063–T6

Ixx: 2.218 in^4
Sxx: 1.479 in^3
(FIN FRAME)

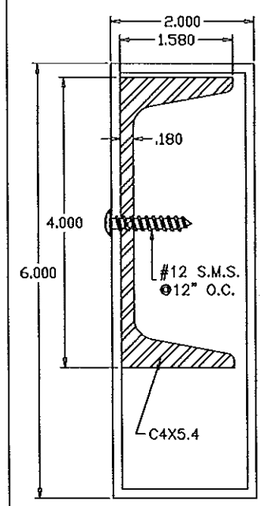

2 X 6
STD. TUBE MULLION
6063–T6

Ixx:19.648 in^4
Sxx: 6.549 in^3

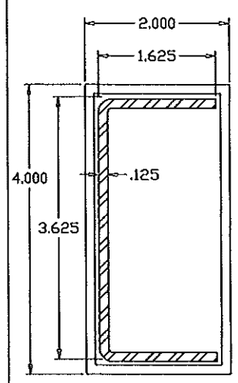

2 X 4
STD. TUBE MULLION
6063–T6

Ixx: 7.649 in^4
Sxx: 3.825 in^3

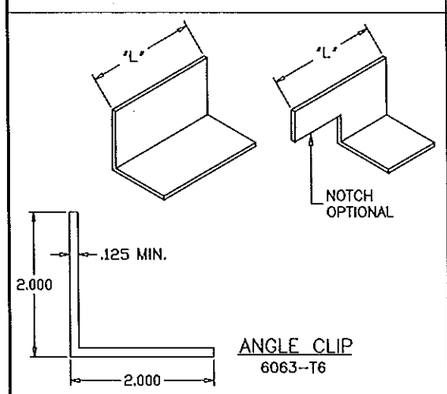

ANGLE CLIP
6063–T6

CLIP LENGTH	
MULL	"L"
1 X 2	1.688"
1 X 3	2.688"
1 X 4	3.688"
2 X 4	3.688"
2 X 6	5.688"

1. ALL CLIPS AND ANGLES ARE TO FIT SNUG INTO TUBE MULLIONS.
2. WHERE ANGLES ARE NOT FIT SNUG INTO TUBE MULLIONS, SEE OPTIONAL ANCHOR DETAIL AT SHEET 9 OF 10.

INSTRUCTIONS:

USE CHARTS AND GRAPHS AS FOLLOWS.

STEP 1 DETERMINE DESIGN LOAD REQUIRED FOR PARTICULAR OPENING.

STEP 2 USE APPROVED GLAZING PRODUCTS MEETING ABOVE LOAD REQUIREMENTS.

STEP 3 USE CONNECTION TO MULLION AS PER PRODUCT APPROVAL.

STEP 4 SPECIFY MAXIMUM SHIM SPACING.

STEP 5 USING CHARTS ON SHEET 5 OF 10 SELECT MULLION SIZE WITH DESIGN RATING MORE THAN DESIGN LOAD SPECIFIED IN STEP 1 ABOVE.

STEP 6 USING ANCHOR TYPES ON SHEET 6 THRU 9 AND ANCHOR CHARTS ON SHEET 9, SELECT ANCHOR TYPE WITH DESIGN RATING MORE THAN THE DESIGN LOADS SPECIFIED IN STEP 1 ABOVE.

PRODUCT REVISED
as complying with the Florida
Building Code
Acceptance No 14-0908.08
Expiration Date 05/30/2017
By
Miami Dade Product Control

RECTANGULAR ALUMINUM TUBE MULLIONS
USING MULLION PROPERTIES ONLY

THESE MULLIONS ARE RATED FOR LARGE MISSILE IMPACT AND CAN BE USED WITH ALL LAWSON'S MIAMI–DADE COUNTY APPROVED IMPACT AND NON–IMPACT PRODUCTS.

NOTES:

1. REFER TO THE GENERAL NOTES ON SHEET 1 OF 10 FOR BUILDING CODE COMPLIANCE.
2. MULLIONS MAY BE ORIENTED VERTICALLY OR HORIZONTALLY.
3. REFER TO SHEET 1 OF 10 FOR TYPICAL MULLION ARRANGEMENTS OR STACK CONFIGURATIONS.

LAWSON INDUSTRIES, INC.
8501 N.W. 90 ST.
MEDLEY, FLORIDA 33166
PH No. (305) 696-8660
MANUFACTURER OF QUALITY ALUMINUM WINDOWS AND GLASS DOORS

ALUMINUM TUBE MULLIONS

MULL & CLIPS CROSS SECTIONS, REINFORCEMENTS AND GENERAL NOTES

Revision #: "B"
Sheet: 4 OF 10
Drawing Number: LAW-ML-1001
Product Reference Number:

Revision Notes:
"A" - No change this sheet
"B" - Revised date for the FBC-2014

Drawn By: N. ERAZO — Date Drawn: 04/27/10
Revised By: N. ERAZO — Date Revised: 08/01/14
Revision Level: — Scale:

THOMAS J. SOTOS
PROFESSIONAL ENGINEER
FL LIC. # 55225

DATE

Width (w)	MULL SPAN	STEEL REINFORCED TUBE MULLIONS 1 X 3	1 X 4	2 X 4	2 X 6
18	38- 3/8"	150.0	150.0	150.0	150.0
24		150.0	150.0	150.0	150.0
30		150.0	150.0	150.0	150.0
36		150.0	150.0	150.0	150.0
42		150.0	150.0	150.0	150.0
48		150.0	150.0	150.0	150.0
54		150.0	150.0	150.0	150.0
60		150.0	150.0	150.0	150.0
66		150.0	150.0	150.0	150.0
72		150.0	150.0	150.0	150.0
78		150.0	150.0	150.0	150.0
18	50-5/8"	150.0	150.0	150.0	150.0
24		150.0	150.0	150.0	150.0
30		150.0	150.0	150.0	150.0
36		150.0	150.0	150.0	150.0
42		150.0	150.0	150.0	150.0
48		150.0	150.0	150.0	150.0
54		150.0	150.0	150.0	150.0
60		150.0	150.0	150.0	150.0
66		147.7	150.0	150.0	150.0
72		135.3	150.0	150.0	150.0
78		124.9	150.0	150.0	150.0
18	57"	150.0	150.0	150.0	150.0
24		150.0	150.0	150.0	150.0
30		150.0	150.0	150.0	150.0
36		150.0	150.0	150.0	150.0
42		150.0	150.0	150.0	150.0
48		150.0	150.0	150.0	150.0
54		137.0	150.0	150.0	150.0
60		123.3	150.0	150.0	150.0
66		112.1	150.0	150.0	150.0
72		102.8	150.0	150.0	150.0
78		94.8	150.0	150.0	150.0
18	63"	150.0	150.0	150.0	150.0
24		150.0	150.0	150.0	150.0
30		150.0	150.0	150.0	150.0
36		150.0	150.0	150.0	150.0
42		130.5	150.0	150.0	150.0
48		114.2	150.0	150.0	150.0
54		101.5	150.0	150.0	150.0
60		91.3	150.0	150.0	150.0
66		83.0	150.0	150.0	150.0
72		76.1	142.4	150.0	150.0
78		70.2	131.4	150.0	150.0

Width (w)	MULL SPAN	STEEL REINFORCED TUBE MULLIONS 1 X 3	1 X 4	2 X 4	2 X 6
18	74-1/4"	150.0	150.0	150.0	150.0
24		139.5	150.0	150.0	150.0
30		111.6	150.0	150.0	150.0
36		93.0	150.0	150.0	150.0
42		79.7	150.0	150.0	150.0
48		69.7	150.0	150.0	150.0
54		62.0	134.6	150.0	150.0
60		55.8	121.2	150.0	150.0
66		50.7	110.1	150.0	150.0
72		46.5	101.0	150.0	150.0
78		42.9	93.2	150.0	150.0
18	84"	128.4	150.0	150.0	150.0
24		96.3	150.0	150.0	150.0
30		77.1	150.0	150.0	150.0
36		64.2	139.5	150.0	150.0
42		55.0	119.5	150.0	150.0
48		48.2	104.6	150.0	150.0
54		42.8	93.0	150.0	150.0
60		38.5	83.7	135.9	150.0
66		35.0	76.1	123.6	150.0
72		32.1	69.7	113.3	150.0
78		29.6	64.4	104.6	150.0
18	96"	86.0	150.0	150.0	150.0
24		64.5	140.1	150.0	150.0
30		51.6	112.1	150.0	150.0
36		43.0	93.4	150.0	150.0
42		36.9	80.1	130.1	150.0
48		32.3	70.1	113.8	150.0
54		28.7	62.3	101.2	150.0
60		25.8	56.1	91.1	150.0
66		23.5	51.0	82.8	150.0
72		21.5	46.7	75.9	150.0
78		19.9	43.1	70.0	150.0
18	108"	60.4	131.2	150.0	150.0
24		45.3	98.4	150.0	150.0
30		36.3	78.7	127.9	150.0
36		30.2	65.6	106.6	150.0
42		25.9	56.2	91.4	150.0
48		22.7	49.2	79.9	150.0
54		20.1	43.7	71.1	150.0
60		18.1	39.4	64.0	150.0
66		16.5	35.8	58.1	147.0
72		15.1	32.8	53.3	134.8
78		-	30.3	49.2	124.4

Width (w)	MULL SPAN	STEEL REINFORCED TUBE MULLIONS 1 X 3	1 X 4	2 X 4	2 X 6
18	120"	44.0	95.7	150.0	150.0
24		33.0	71.8	116.6	150.0
30		26.4	57.4	93.2	150.0
36		22.0	47.8	77.7	150.0
42		18.9	41.0	66.6	150.0
48		16.5	35.9	58.3	149.7
54		-	31.9	51.8	133.1
60		-	28.7	46.6	119.8
66		-	26.1	42.4	108.9
72		-	23.9	38.9	99.8
78		-	22.1	35.9	92.1
18	132"	33.1	71.9	116.8	150.0
24		24.8	53.9	87.6	150.0
30		19.9	43.1	70.1	150.0
36		16.5	35.9	58.4	150.0
42		-	30.8	50.0	128.5
48		-	27.0	43.8	112.5
54		-	24.0	38.9	100.0
60		-	21.6	35.0	90.0
66		-	19.6	31.8	81.8
72		-	18.0	29.2	75.0
78		-	16.6	26.9	69.2
18	144"	25.5	55.4	89.9	150.0
24		19.1	41.5	67.5	150.0
30		15.3	33.2	54.0	138.6
36		-	27.7	45.0	115.5
42		-	23.7	38.5	99.0
48		-	20.8	33.7	86.6
54		-	18.5	30.0	77.0
60		-	16.6	27.0	69.3
66		-	15.1	24.5	63.0
72		-	-	22.5	57.8
78		-	-	20.8	53.3
18	150"	22.6	49.0	79.6	150.0
24		16.9	36.7	59.7	150.0
30		-	29.4	47.7	122.6
36		-	24.5	39.8	102.2
42		-	21.0	34.1	87.6
48		-	18.4	29.8	76.6
54		-	16.3	26.5	68.1
60		-	-	23.9	61.3
66		-	-	21.7	55.7
72		-	-	19.9	51.1
78		-	-	18.4	47.2

LAMSON INDUSTRIES, INC.
8501 N.W. 90 ST.
MEDLEY, FLORIDA 33166
PH No. (305) 696-8660

MANUFACTURER OF QUALITY ALUMINUM WINDOWS AND GLASS DOORS

ALUMINUM TUBE MULLIONS

REINFORCED TUBE MULLIONS DESIGN PRESSURE CHARTS AND GENERAL NOTES

Revision #: "B"
Sheet: 5 OF 10
Drawing Number: LAW-ML-1001
Product Reference Number:

Revision Notes:
"A" - No change this sheet
"B" - Revised date for the FBC-2014

Date Drawn: 04/27/10
Date Revised: 08/01/14
Scale:
Drawn By: N. ERAZO
Revised By: N. ERAZO
Revision Level:

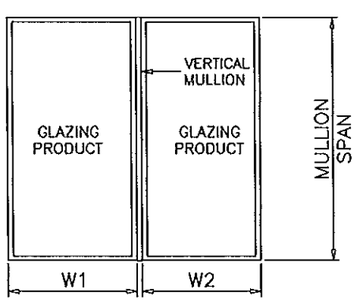

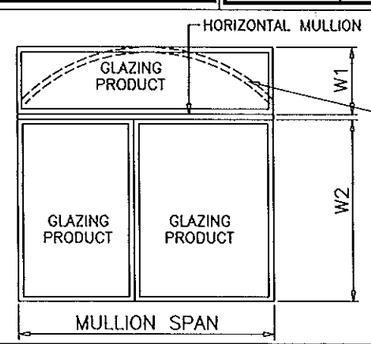

TYPICAL MULLION ARRANGEMENTS

NOTE:
MULLIONS RATED IN THESE CHARTS MAY BE ORIENTED VERTICALLY OR HORIZONTALLY.
(INTERPOLATION BETWEEN WIDTHS ALLOWED)

$$\text{WIDTH (W)} = \frac{W1 + W2}{2}$$

PRODUCT REVISED
as complying with the Florida
Building Code
Acceptance No 14-0908.08
Expiration Date 05/30/2017
By
Miami Dade Product Control

THOMAS J. SOTOS
PROFESSIONAL ENGINEER
FL LIC. # 55225

DATE 7 2014

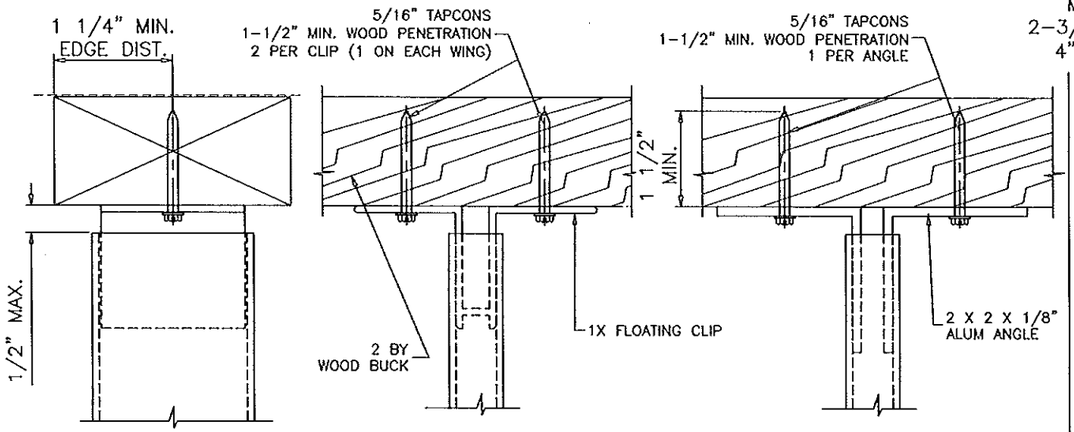

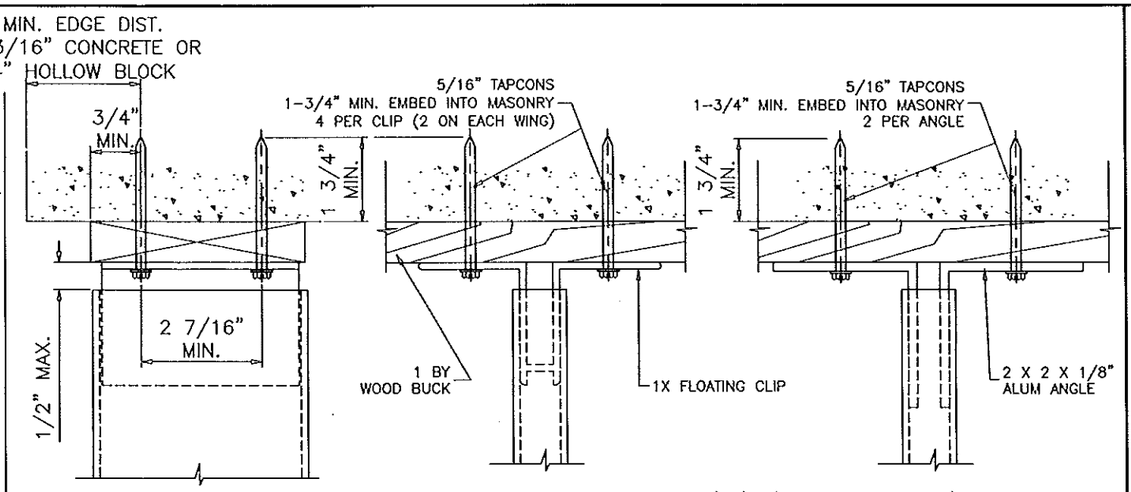

ANCHORS TYPE 'D' (INTO BLOCK)

ANCHORS TYPE 'G' (INTO CONCRETE)

4 ANCHORS THRU 1X BUCK
INTO CONCRETE OR BLOCK
1"x4" & 2"x4" MULL

ALL CLIPS AND ANGLES TO FIT SNUG
INTO TUBE MULLIONS.
TAPCONS MAY BE HEX OR FLAT HEAD.

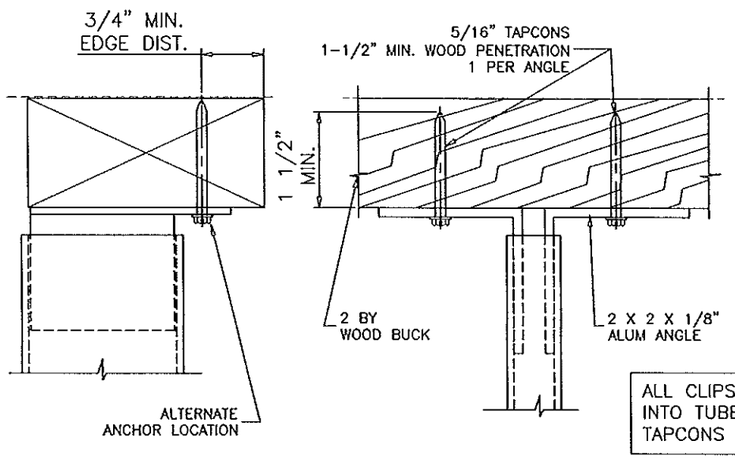

ALL CLIPS AND ANGLES TO FIT SNUG
INTO TUBE MULLIONS.
TAPCONS MAY BE HEX OR FLAT HEAD.

ANCHORS TYPE 'A'

2 ANCHORS INTO WOOD

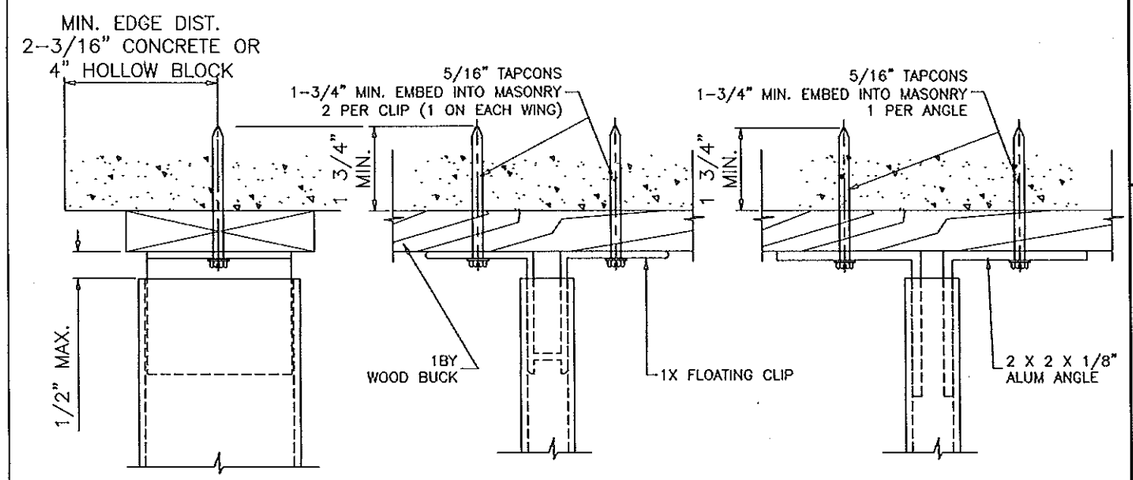

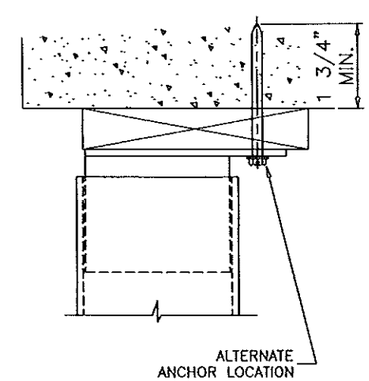

ANCHORS TYPE 'C' (INTO BLOCK)

ANCHORS TYPE 'F' (INTO CONCRETE)

2 ANCHORS THRU 1X BUCK
INTO CONCRETE OR BLOCK

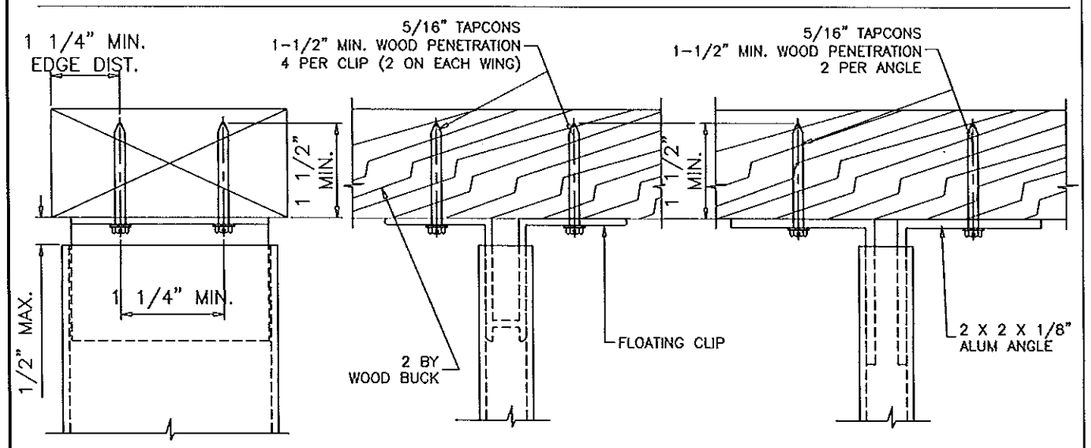

ANCHORS TYPE 'B'

4 ANCHORS INTO WOOD

PRODUCT REVISED
as complying with the Florida
Building Code
Acceptance No 14-0908.08
Expiration Date 05/30/2017
By
Miami Dade Product Control

THOMAS I. SOTOS
PROFESSIONAL ENGINEER
FL LIC. # 55225

DATE

LAMSON INDUSTRIES, INC.
MANUFACTURER OF QUALITY ALUMINUM WINDOWS AND GLASS DOORS
8501 N.W. 90 ST.
MEDLEY, FLORIDA 33166
PH No. (305) 696-8660

ALUMINUM TUBE MULLIONS

ANCHOR/CLIP TYPES, INSTALLATION DETAILS, AND GENERAL NOTES

Drawing Number: LAW-ML-1001	Sheet: 6 OF 10	Revision #: "B"	Product Reference Number:
Date Drawn: 04/27/10	Date Revised: 08/01/14	Scale:	
Drawn By: N. ERAZO	Revised By: N. ERAZO	Revision Level:	

Revision Notes:
"A" - No change this sheet
"B" - Revised date for the FBC-2014

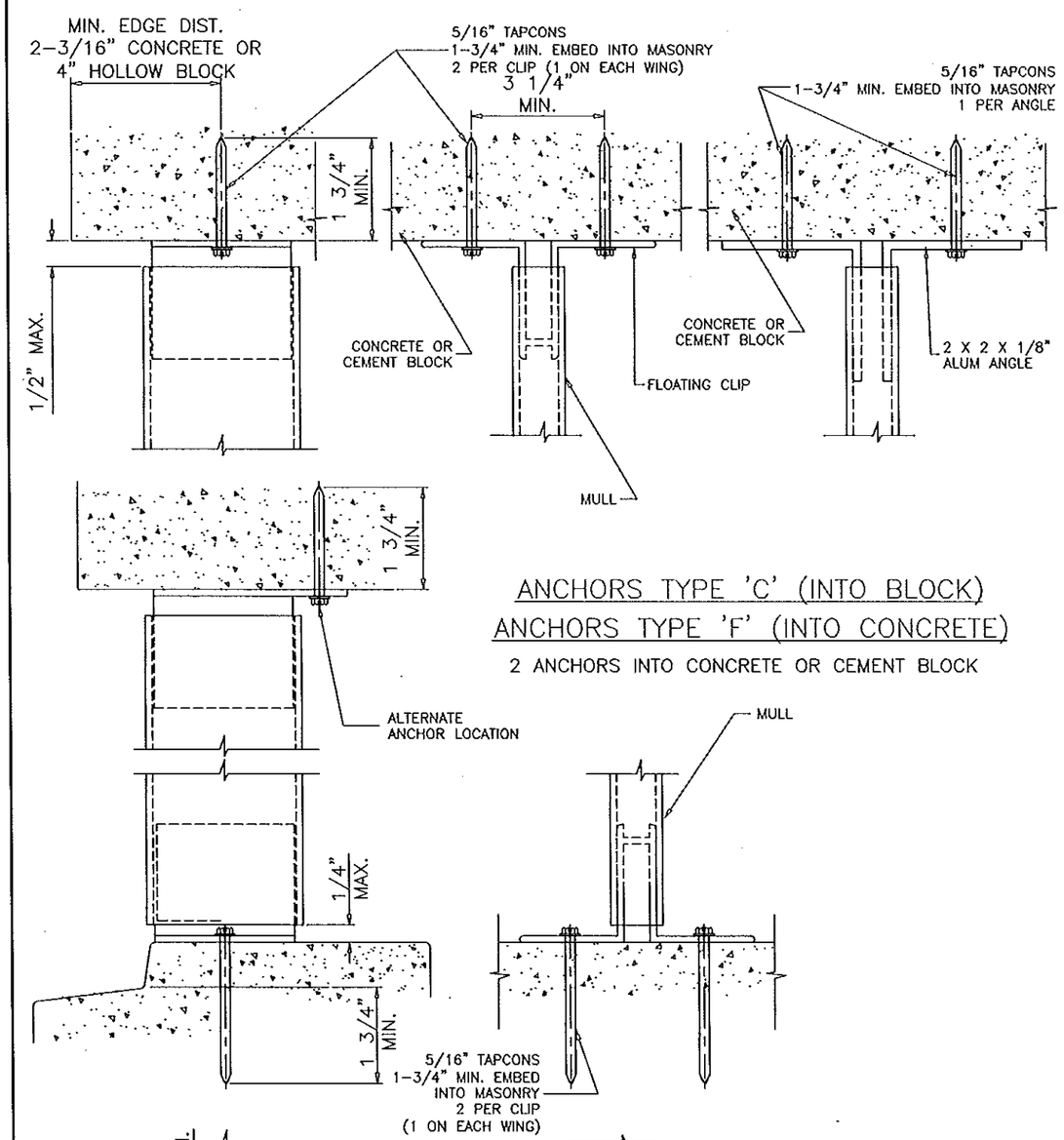

ANCHORS TYPE 'C' (INTO BLOCK)

ANCHORS TYPE 'F' (INTO CONCRETE)

2 ANCHORS INTO CONCRETE OR CEMENT BLOCK

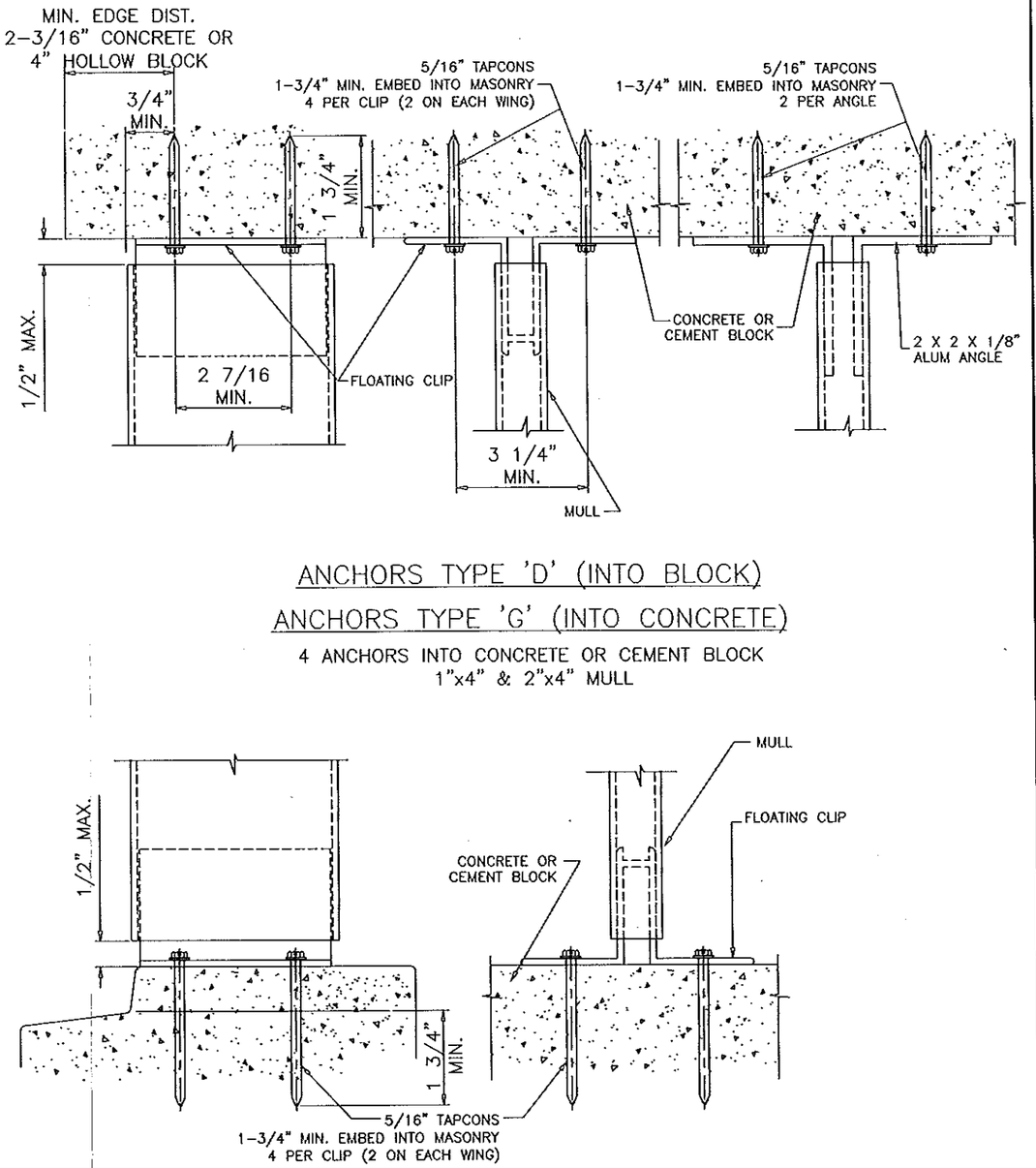

ANCHORS TYPE 'D' (INTO BLOCK)

ANCHORS TYPE 'G' (INTO CONCRETE)

4 ANCHORS INTO CONCRETE OR CEMENT BLOCK
1"x4" & 2"x4" MULL

ALL CLIPS AND ANGLES TO FIT SNUG INTO TUBE MULLIONS.
TAPCONS MAY BE HEX OR FLAT HEAD.

CLIPS OR ANGLES CONNECTED DIRECTLY TO MASONRY TO BE PROTECTED WITH ALKALI-RESISTANT COATINGS, SUCH AS BITUMINOUS PAINT OR WATER-WHITE METHACRYLATE LACQUER.

PRODUCT REVISED
as complying with the Florida
Building Code
Acceptance No 14-0908.08
Expiration Date 05/30/2017
By
Miami-Dade Product Control

LAWSON INDUSTRIES, INC.
8501 N.W. 90 ST.
MEDLEY, FLORIDA 33166
PH No. (305) 696-8660

MANUFACTURER OF QUALITY ALUMINUM WINDOWS AND GLASS DOORS

ALUMINUM TUBE MULLIONS

ANCHOR/CLIP TYPES, INSTALLATION DETAILS, AND GENERAL NOTES

Revision Notes: "A" - No change this sheet	Drawing Number: LAW-ML-1001	Sheet: 7 OF 10	Revision #: "A"
Drawn By: N. ERAZO	Date Drawn: 04/27/10	Product Reference Number:	
Revised By: N. ERAZO	Date Revised: 01/25/12		
Revision Level:	Scale:		

THOMAS J. SOTOS
PROFESSIONAL ENGINEER
FL LIC. # 55225

DATE

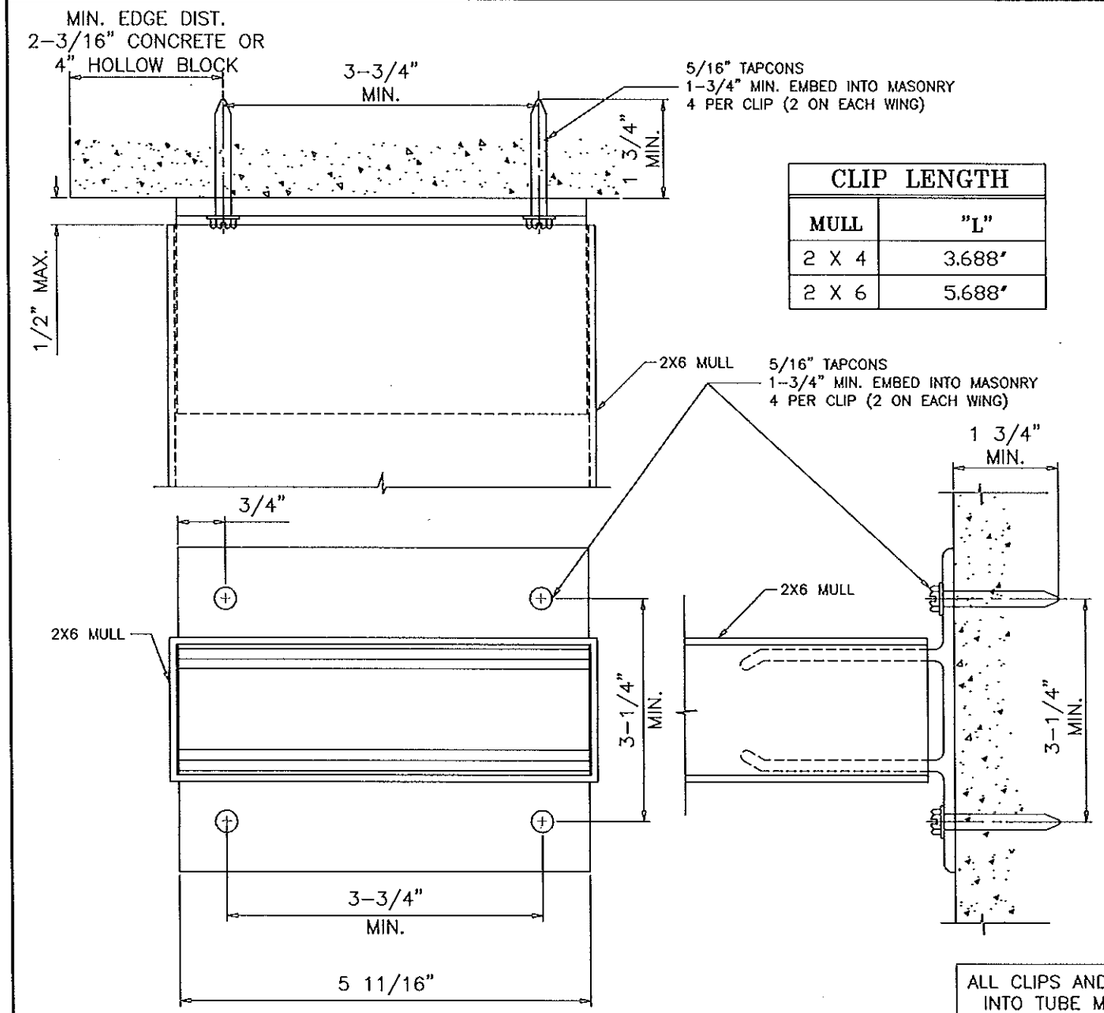

CLIP LENGTH	
MULL	"L"
2 X 4	3.688"
2 X 6	5.688"

ANCHORS TYPE 'E' (INTO BLOCK)

ANCHORS TYPE 'H' (INTO CONCRETE)

ANCHORS INTO CONCRETE or BLOCK
2"X6" MULL SHOWN

ALL CLIPS AND ANGLES TO FIT SNUG INTO TUBE MULLIONS.
TAPCONS MAY BE HEX OR FLAT HEAD.

CLIPS OR ANGLES CONNECTED DIRECTLY TO MASONRY TO BE PROTECTED WITH ALKALI-RESISTANT COATINGS, SUCH AS BITUMINOUS PAINT OR WATER-WHITE METHACRYLATE LACQUER.

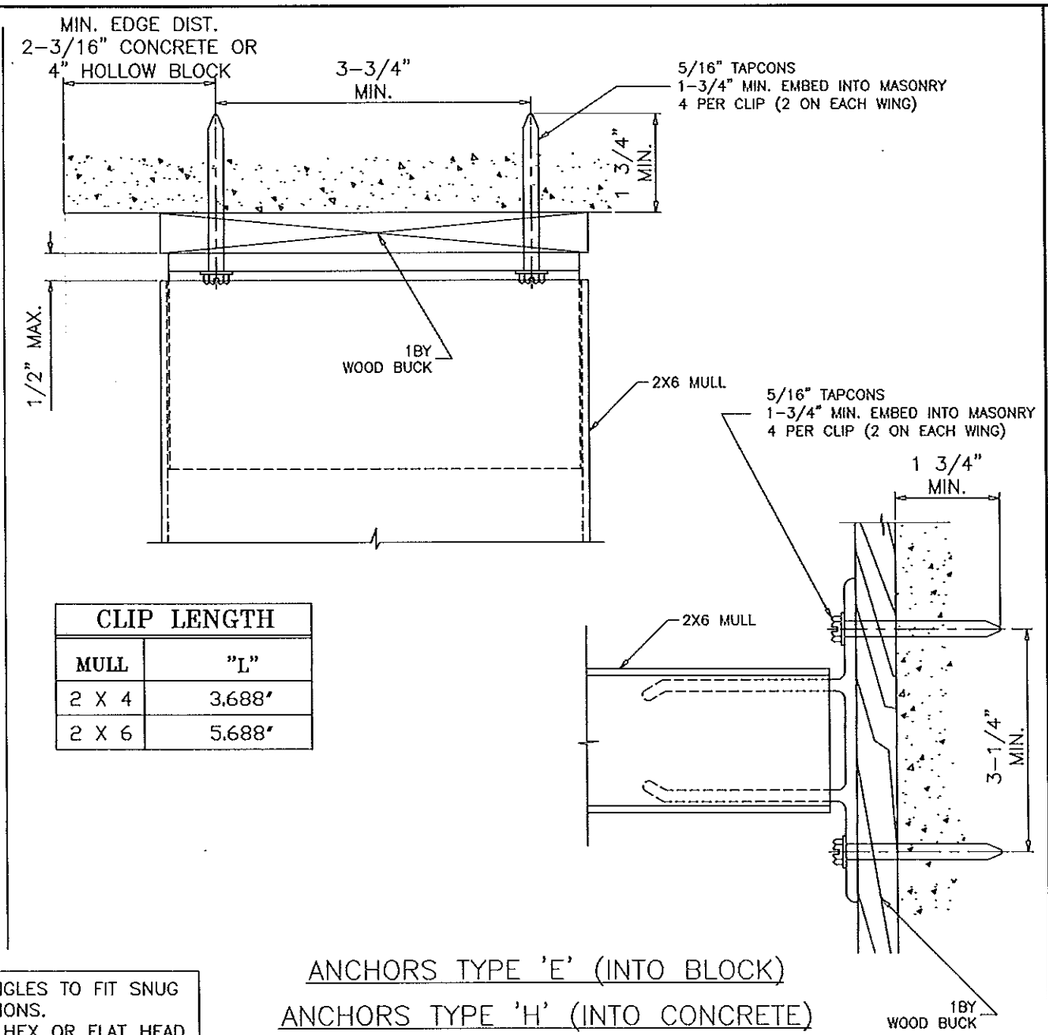

CLIP LENGTH	
MULL	"L"
2 X 4	3.688"
2 X 6	5.688"

ANCHORS TYPE 'E' (INTO BLOCK)

ANCHORS TYPE 'H' (INTO CONCRETE)

4 ANCHORS THRU 1X BUCK
INTO CONCRETE OR BLOCK
2"X6" MULL SHOWN

PRODUCT REVISED
as complying with the Florida
Building Code
Acceptance No 14-0908.08
Expiration Date 05/30/2017
By
Miami Dade Product Control

LAWSON INDUSTRIES, INC.
8501 N.W. 90 ST.
MEDLEY, FLORIDA 33166
PH No. (305) 696-8660

MANUFACTURER OF QUALITY ALUMINUM WINDOWS AND GLASS DOORS

ALUMINUM TUBE MULLIONS

ANCHOR/CLIP TYPES, INSTALLATION DETAILS, AND GENERAL NOTES

Product Reference Number:
Drawing Number: LAW-ML-1001
Sheet: 8 OF 10
Revision #: "B"

Revision Notes:
"A" - No change this sheet
"B" - Revised date for the FBC-2014

Drawn By: N. ERAZO
Date Drawn: 04/27/10
Revised By: N. ERAZO
Date Revised: 08/01/14
Revision Level:
Scale:

THOMAS J. SOTOS
PROFESSIONAL ENGINEER
FL LIC. # 55225

DATE

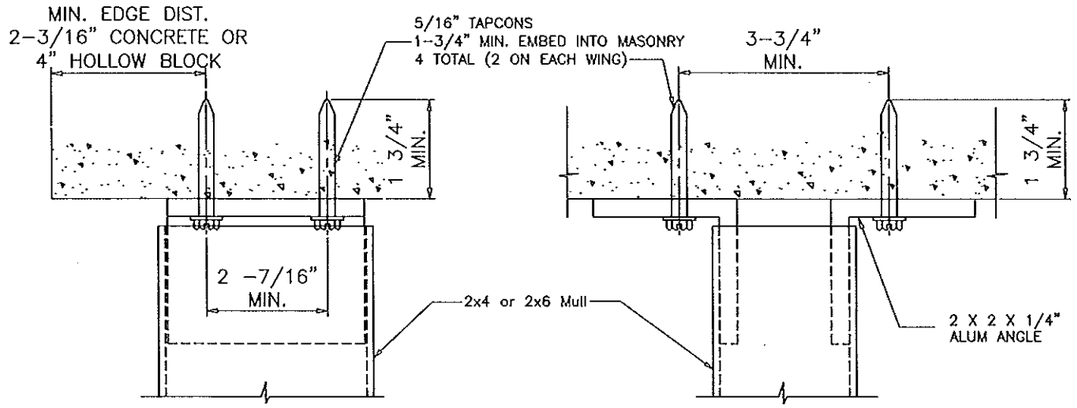

CLIPS OR ANGLES CONNECTED DIRECTLY TO MASONRY TO BE PROTECTED WITH ALKALI-RESISTANT COATINGS, SUCH AS BITUMINOUS PAINT OR WATER-WHITE METHACRYLATE LACQUER.

CLIP LENGTH	
MULL	"L"
1 X 2	1.688"
1 X 3	2.688"
1 X 4	3.688"
2 X 4	3.688"
2 X 6	5.688"

1. ALL CLIPS AND ANGLES ARE TO FIT SNUG INTO TUBE MULLIONS.
2. WHERE ANGLES ARE NOT FIT SNUG INTO TUBE MULLIONS, SEE OPTIONAL ANCHOR DETAIL AT SHEET 9 OF 10.

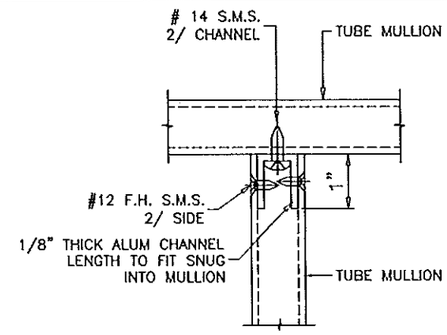

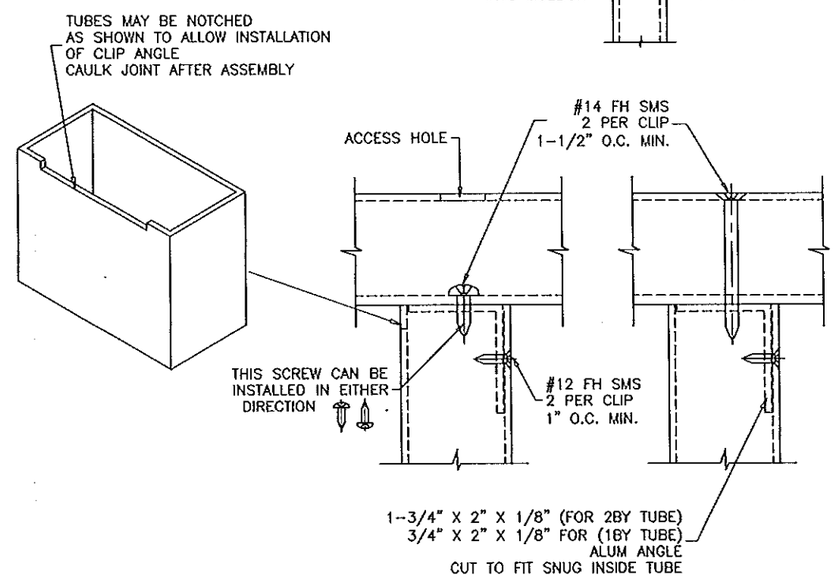

ANCHORS TYPE 'I'

METAL TO METAL CONNECTION

USE CHARTS FOR ANCHOR TYPE 'I' TO VERIFY CAPACITY OF CONNECTION

LOCATION OF SCREWS CONNECTING ANGLES TO TUBES WHERE ANGLES ARE NOT FIT SNUG INTO TUBE MULLIONS.

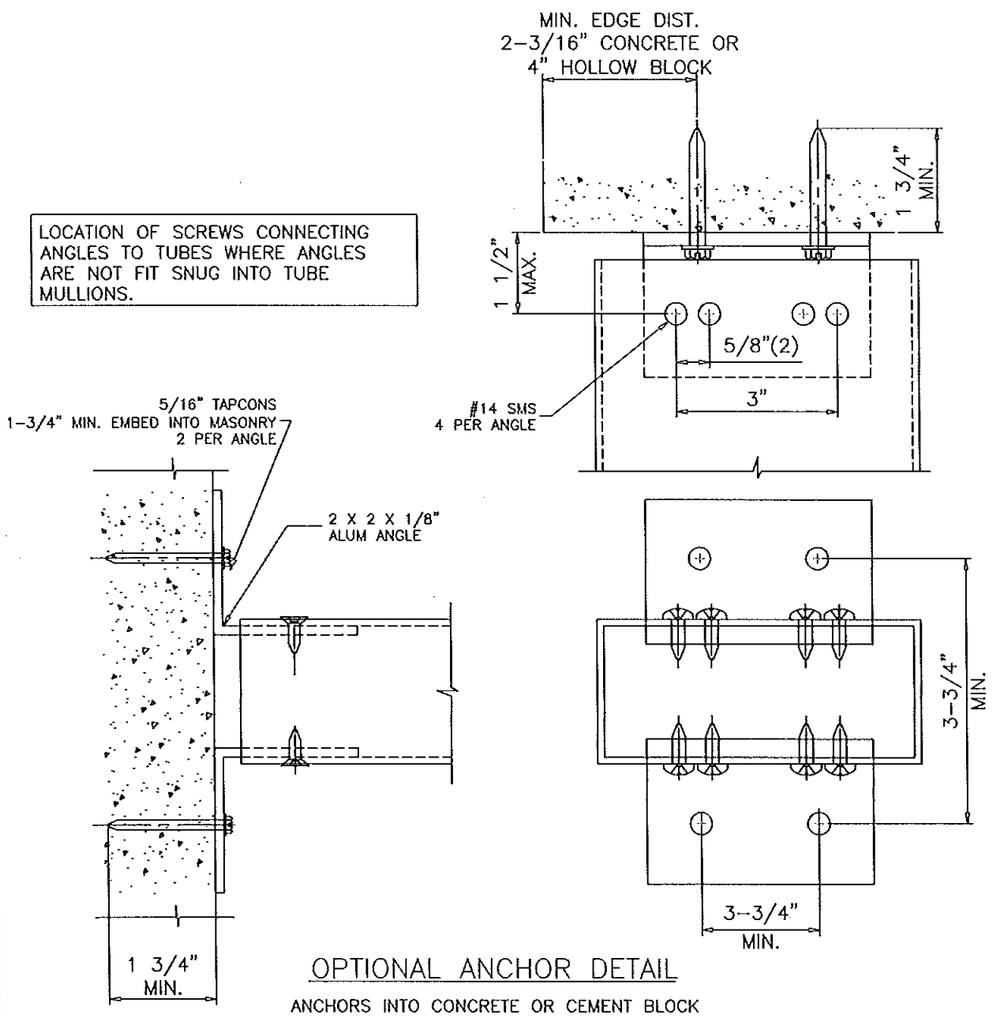

OPTIONAL ANCHOR DETAIL

ANCHORS INTO CONCRETE OR CEMENT BLOCK

ALL CLIPS AND ANGLES TO FIT SNUG INTO TUBE MULLIONS.
TAPCONS MAY BE HEX OR FLAT HEAD.

PRODUCT REVISED
as complying with the Florida
Building Code
Acceptance No. 14-0908.08
Expiration Date 05/30/2017
By
Miami Dade Product Control

LAWSON INDUSTRIES, INC.
8501 N.W. 90 ST.
MEDLEY, FLORIDA 33166
PH No. (305) 696-8660

MANUFACTURER OF QUALITY ALUMINUM WINDOWS AND GLASS DOORS

ALUMINUM TUBE MULLIONS

ANCHOR/CLIP TYPES, INSTALLATION DETAILS, AND GENERAL NOTES

Product Reference Number:	Drawing Number: LAW-ML-1001	Sheet: 9 OF 10	Revision #: "B"
Drawn By: N. ERAZO	Date Drawn: 04/27/10		
Revised By: N. ERAZO	Date Revised: 08/01/14		
Revision Level:	Scale:		

Revision Notes:
'A' - No change this sheet
'B' - Revised date for the FBC-2014

THOMAS J. SOTOS
PROFESSIONAL ENGINEER
FL LIC. # 55225

SEP 2 2014

DATE

Width (w)	Mullion Span	ANCHOR TYPES and SUBSTRATE A Wd.	B Wd.	C Blk.	D Blk.	E Blk.	F Conc.	G Conc.	H Conc.	I Mtl.
18	38 3/8	150	150	150	150	150	150	150	150	150
24		132	150	150	150	150	150	150	150	150
30		105	150	150	150	150	150	150	150	150
36		88	150	150	150	150	150	150	150	150
42		75	150	150	150	150	150	150	150	150
48		66	132	150	150	150	150	150	150	150
54		59	117	135	150	150	150	150	150	150
60		53	105	121	150	150	135	150	150	145
66		48	96	110	150	150	123	150	150	132
72		44	88	101	150	150	113	150	150	121
78		41	81	93	140	150	104	150	150	111
18	50 5/8	133	150	150	150	150	150	150	150	150
24		100	150	150	150	150	150	150	150	150
30		80	150	150	150	150	150	150	150	150
36		67	133	150	150	150	150	150	150	150
42		57	114	131	150	150	147	150	150	150
48		50	100	115	150	150	128	150	150	137
54		44	89	102	150	150	114	150	150	122
60		40	80	92	138	150	103	150	150	110
66		36	73	83	126	150	93	140	150	100
72		33	67	76	115	150	85	129	150	91
78		31	61	71	106	141	79	119	150	84
18	57	118	150	150	150	150	150	150	150	150
24		89	150	150	150	150	150	150	150	150
30		71	142	150	150	150	150	150	150	150
36		59	118	136	150	150	150	150	150	150
42		51	101	116	150	150	130	150	150	139
48		44	89	102	150	150	114	150	150	122
54		39	79	91	136	150	101	150	150	108
60		35	71	82	123	150	91	137	150	97
66		32	64	74	111	148	83	125	150	89
72		30	59	68	102	136	76	114	150	81
78		27	55	63	94	125	70	105	140	75
18	63	107	150	150	150	150	150	150	150	150
24		80	150	150	150	150	150	150	150	150
30		64	128	148	150	150	150	150	150	150
36		53	107	123	150	150	137	150	150	147
42		46	92	105	150	150	118	150	150	126
48		40	80	92	139	150	103	150	150	110
54		36	71	82	123	150	92	138	150	98
60		32	64	74	111	147	82	124	150	88
66		29	58	67	101	134	75	113	150	80
72		27	53	61	92	123	69	103	137	73
78		25	49	57	85	113	63	95	127	68

Width (w)	Mullion Span	ANCHOR TYPES and SUBSTRATE A Wd.	B Wd.	C Blk.	D Blk.	E Blk.	F Conc.	G Conc.	H Conc.	I Mtl.
18	74 1/4	91	150	150	150	150	150	150	150	150
24		68	136	150	150	150	150	150	150	150
30		54	109	125	150	150	140	150	150	150
36		45	91	104	150	150	117	150	150	125
42		39	78	89	134	150	100	150	150	107
48		34	68	78	118	150	87	132	150	93
54		30	60	70	105	139	78	117	150	83
60		27	54	63	94	125	70	105	140	75
66		25	49	57	86	114	64	96	127	68
72		23	45	52	78	104	58	88	117	62
78		21	42	48	72	96	54	81	108	58
18	84	80	150	150	150	150	150	150	150	150
24		60	120	138	150	150	150	150	150	150
30		48	96	111	150	150	124	150	150	132
36		40	80	92	139	150	103	150	150	110
42		34	69	79	119	150	88	133	150	94
48		30	60	69	104	138	77	116	150	83
54		27	53	61	92	123	69	103	137	73
60		24	48	55	83	111	62	93	124	66
66		22	44	50	76	101	56	85	112	60
72		20	40	46	69	92	52	78	103	55
78		19	37	43	64	85	48	72	95	51
18	96	70	140	150	150	150	150	150	150	150
24		53	105	121	150	150	135	150	150	145
30		42	84	97	146	150	108	150	150	116
36		35	70	81	121	150	90	136	150	96
42		30	60	69	104	138	77	116	150	83
48		26	53	61	91	121	68	102	135	72
54		23	47	54	81	108	60	90	120	64
60		21	42	48	73	97	54	81	108	58
66		19	38	44	66	88	49	74	98	53
72		18	35	40	61	81	45	68	90	48
78		16	32	37	56	74	42	63	83	45
18	108	62	125	143	150	150	150	150	150	150
24		47	94	108	150	150	120	150	150	129
30		37	75	86	129	150	96	145	150	103
36		31	62	72	108	143	80	121	150	86
42		27	53	61	92	123	69	103	137	73
48		23	47	54	81	108	60	90	120	64
54		21	42	48	72	96	53	80	107	57
60		19	37	43	65	86	48	72	96	51
66		17	34	39	59	78	44	66	87	47
72		16	31	36	54	72	40	60	80	43
78		14	29	33	50	66	37	56	74	40

Width (w)	Mullion Span	ANCHOR TYPES and SUBSTRATE A Wd.	B Wd.	C Blk.	D Blk.	E Blk.	F Conc.	G Conc.	H Conc.	I Mtl.
18	120	56	112	129	150	150	144	150	150	150
24		42	84	97	146	150	108	150	150	116
30		34	67	77	116	150	87	130	150	93
36		28	56	65	97	129	72	109	144	77
42		24	48	55	83	111	62	93	124	66
48		21	42	48	73	97	54	81	108	58
54		19	37	43	65	86	48	72	96	51
60		17	34	39	58	77	43	65	87	46
66		15	31	35	53	70	39	59	79	42
72		14	28	32	49	65	36	54	72	39
78		13	26	30	45	60	33	50	67	36
18	132	51	102	117	150	150	131	150	150	140
24		38	77	88	132	150	98	148	150	105
30		31	61	70	106	141	79	118	150	84
36		26	51	59	88	117	66	99	131	70
42		22	44	50	76	101	56	85	112	60
48		19	38	44	66	88	49	74	98	53
54		17	34	39	59	78	44	66	87	47
60		15	31	35	53	70	39	59	79	42
66		14	28	32	48	64	36	54	72	38
72		13	26	29	44	59	33	49	66	35
78		12	24	27	41	54	30	46	61	32
18	144	47	94	108	150	150	120	150	150	129
24		35	70	81	121	150	90	136	150	96
30		28	56	65	97	129	72	109	144	77
36		23	47	54	81	108	60	90	120	64
42		20	40	46	69	92	52	78	103	55
48		18	35	40	61	81	45	68	90	48
54		16	31	36	54	72	40	60	80	43
60		14	28	32	49	65	36	54	72	39
66		13	26	29	44	59	33	49	66	35
72		12	23	27	40	54	30	45	60	32
78		11	22	25	37	50	28	42	55	30
18	150	45	90	103	150	150	115	150	150	123
24		34	67	77	116	150	87	130	150	93
30		27	54	62	93	124	69	104	138	74
36		22	45	52	78	103	58	87	115	62
42		19	38	44	67	88	49	74	99	53
48		17	34	39	58	77	43	65	87	46
54		15	30	34	52	69	38	58	77	41
60		13	27	31	47	62	35	52	69	37
66		12	24	28	42	56	31	47	63	34
72		11	22	26	39	52	29	43	58	31
78		10	21	24	36	48	27	40	53	28

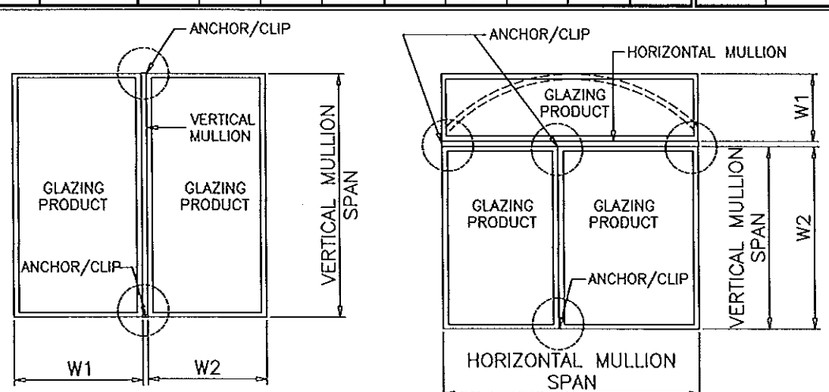

TYPICAL MULLION CLIP ARRANGEMENTS

ANCHOR CLIP NOTES:

1. FOR CLIP TYPES AND ANCHOR CONDITIONS REFER TO SHEETS 6, 7, 8, & 9 FOR DETAILS AND NOTES.
2. REFER TO CHARTS ABOVE FOR MAX. DESIGN PRESSURE
3. SELECT ANCHOR TYPE WITH DESIGN RATING MORE THAN THE DESIGN LOADS REQUIRED FOR PARTICULAR OPENING.
4. ANY ANCHOR CONDITION SHOWN HEREIN MAY COVER LOCATIONS AT HEAD, SILL OR JAMB ENDS.
5. INTERPOLATION BETWEEN WIDTHS OR SPANS ALLOWED.

PRODUCT REVISED
as complying with the Florida
Building Code
Acceptance No 14-0908.08
Expiration Date 05/30/2017
By
Miami Dade Product Control

LAMSON INDUSTRIES, INC.
8501 N.W. 90 ST.
MEDLEY, FLORIDA 33166
PH No. (305) 696-8660

MANUFACTURER OF QUALITY ALUMINUM WINDOWS AND GLASS DOORS

ALUMINUM TUBE MULLIONS

CLIP/ANCHORS DESIGN PRESSURE CHARTS AND GENERAL NOTES

Revision Notes:
"A" - No change this sheet
"B" - Revised date for the FBC-2014

Product Reference Number:
Drawing Number: LAW-ML-1001
Sheet: 10 OF 10
Revision #: "B"
Drawn By: N. ERAZO
Date Drawn: 04/27/10
Revised By: N. ERAZO
Date Revised: 08/01/14
Revision Level:
Scale:

THOMAS J. SOTOS
PROFESSIONAL ENGINEER
FL LIC. # 55225

DATE: 7/01/14