MIAMI-DADE COUNTY
DEPARTMENT OF REGULATORY AND ECONOMIC RESOURCES (RER)
BOARD AND CODE ADMINISTRATION DIVISION

MIAMI-DADE COUNTY
PRODUCT CONTROL SECTION
11805 SW 26 Street, Room 208
T (786) 315-2590 F (786) 315-2599
www.miamidade.gov/economy

NOTICE OF ACCEPTANCE (NOA)

Lawson Industries, Inc.
8501 NW 90 Street
Medley, FL 33166

SCOPE:

This NOA is being issued under the applicable rules and regulations governing the use of construction materials. The documentation submitted has been reviewed and accepted by Miami-Dade County RER-Product Control Section to be used in Miami Dade County and other areas where allowed by the Authority Having Jurisdiction (AHJ).

This NOA shall not be valid after the expiration date stated below. The Miami-Dade County Product Control Section (In Miami-Dade County) and/ or the AHJ (in areas other than Miami-Dade County) reserve the right to have this product or material tested for quality assurance purposes. If this product or material fails to perform in the accepted manner, the manufacturer will incur the expense of such testing and the AHJ may immediately revoke, modify, or suspend the use of such product or material within their jurisdiction. RER reserves the right to revoke this acceptance, if it is determined by Miami-Dade County Product Control Section that this product or material fails to meet the requirements of the applicable building code.

This product is approved as described herein, and has been designed to comply with the Florida Building Code, including the High Velocity Hurricane Zone.

DESCRIPTION: Series "HS-8600 (Fin-Frame)" Aluminum Horizontal Sliding Window – N.I.

APPROVAL DOCUMENT: Drawing No. **L8600-0401**, titled "HS-8600 Horizontal Rolling Fin Window", sheets 01 through 08 of 08, dated 05/02/05, with revision "**B**", dated 08/11/14, prepared by manufacturer, and signed and sealed by Thomas J. Sotos, P. E., bearing the Miami-Dade County Product Control Revision stamp with the Notice of Acceptance number and expiration date by the Miami-Dade County Product Control Section.

MISSILE IMPACT RATING: None.

LABELING: Each unit shall bear a permanent label with the manufacturer's name or logo, city, state, series, and following statement: "Miami-Dade County Product Control Approved", unless otherwise noted herein.

RENEWAL of this NOA shall be considered after a renewal application has been filed and there has been no change in the applicable building code negatively affecting the performance of this product.

TERMINATION of this NOA will occur after the expiration date or if there has been a revision or change in the materials, use, and/ or manufacture of the product or process. Misuse of this NOA as an endorsement of any product, for sales, advertising or any other purposes shall automatically terminate this NOA. Failure to comply with any section of this NOA shall be cause for termination and removal of NOA.

ADVERTISEMENT: The NOA number preceded by the words Miami-Dade County, Florida, and followed by the expiration date may be displayed in advertising literature. If any portion of the NOA is displayed, then it shall be done in its entirety.

INSPECTION: A copy of this entire NOA shall be provided to the user by the manufacturer or its distributors and shall be available for inspection at the job site at the request of the Building Official.

This NOA **revises NOA No. 12-0127.18** and consists of this page 1 and evidence pages E-1 and E-2, as well as approval document mentioned above.

The submitted documentation was reviewed by **Jaime D. Gascon, P. E.**

MIAMI-DADE COUNTY APPROVED

J. Gascon
11/6/14

NOTICE OF ACCEPTANCE: EVIDENCE SUBMITTED

A. DRAWINGS

1. Manufacturer's die drawings and sections.
   (Submitted under previous NOA No. 05–0919.04)
2. Drawing No. **L8600–0401**, titled "HS–8600 Horizontal Rolling Fin Window", sheets 01 through 08 of 08, dated 05/02/05, with revision "**B**" dated 08/11/14, prepared by manufacturer, and signed and sealed by Thomas J. Sotos, P. E.

B. TESTS

1. Test reports on: 1) Air Infiltration Test, per FBC, TAS 202–94
   2) Uniform Static Air Pressure Test, Loading per FBC TAS 202–94
   3) Water Resistance Test, per FBC, TAS 202–94
   4) Forced Entry Test, per FBC 3603.2 (b), TAS 202–94

   along with marked–up drawings and installation diagram of an aluminum horizontal sliding window, prepared by Fenestration Testing Laboratory, Inc., Test Reports No.'s **FTL–4533**, dated 06/22/05, **FTL–4541**, dated 06/24/05, **FTL–4429**, dated 06/24/05 and **FTL–4413**, dated 06/23/05, all signed and sealed by Edmundo J. Largaespada, P. E.
   (Submitted under previous NOA No. 05–0919.04)
2. Test reports on: 1) Uniform Static Air Pressure Test, Loading per FBC TAS 202–94
   2) Forced Entry Test, per FBC 3603.2 (b), TAS 202–94

   along with marked–up drawings and installation diagram of aluminum horizontal sliding windows, prepared by Fenestration Testing Laboratory, Inc., Test Reports No.'s **FTL–4578**, dated 06/24/05 and **FTL–4456**, dated 06/23/05, both signed and sealed by Edmundo J. Largaespada, P. E.
   (Submitted under previous NOA No. 05–0919.04)
3. Test reports on: 1) Uniform Static Air Pressure Test, Loading per FBC TAS 202–94 along with marked–up drawings and installation diagram of aluminum horizontal sliding windows, prepared by Fenestration Testing Laboratory, Inc., Test Reports No.'s **FTL–4553**, dated 06/22/05, **FTL–4547**, dated 06/23/05, **FTL–4588**, dated 06/24/05, **FTL–4594**, dated 06/24/05 and **FTL–4457**, dated 06/24/05, all signed and sealed by Edmundo J. Largaespada, P. E.
   (Submitted under previous NOA No. 05–0919.04)

C. CALCULATIONS

1. Anchor verification calculations and structural analysis, complying with FBC, prepared by Lawson Industries, Inc., dated 08/17/05 and 10/20/10, both signed and sealed by Thomas J. Sotos, P. E.
   (Submitted under previous NOA No. 10–1025.03)
2. **Glazing complies with ASTM E1300–04/ 09**

Jaime D. Gascon, P. E.
Product Control Section Supervisor
NOA No. 14–0908.15
Expiration Date: February 23, 2016
Approval Date: November 13, 2014

NOTICE OF ACCEPTANCE: EVIDENCE SUBMITTED

D. QUALITY ASSURANCE

1. Miami–Dade Department of Regulatory and Economic Resources (RER)

E. MATERIAL CERTIFICATIONS

1. None.

F. STATEMENTS

1. Statement letter of conformance to and complying with **FBC 5th Edition (2014)**, issued by manufacturer, dated 09/02/14, signed and sealed by Thomas J. Sotos, P. E.
2. Department of State Certification of **LAWSON INDUSTRIES, INC.** as a for profit corporation, active and organized under the laws of the State of Florida, dated 04/11/14 and filed at the Secretary of State.
3. Statement letter of conformance, complying with **FBC–2010**, dated 01/25/12, signed and sealed by Thomas J. Sotos, P. E.
   (Submitted under previous NOA No.12–0127.17)
4. Statement letter of no financial interest, dated 08/15/05, signed and sealed by Thomas J. Sotos, P. E.
   (Submitted under previous NOA No. 05–0919.04)
5. Laboratory compliance letter for Test Reports No.'s **FTL–4533**, dated 06/22/05, **FTL–4541**, dated 06/24/05, **FTL–4429**, dated 06/24/05, **FTL–4413**, dated 06/23/05, **FTL–4578**, dated 06/24/05, **FTL–4456**, dated 06/23/05, **FTL–4553**, dated 06/22/05, **FTL–4547**, dated 06/23/05, **FTL–4588**, dated 06/24/05, **FTL–4594**, dated 06/24/05 and **FTL–4457**, dated 06/24/05, all issued by Fenestration Testing Laboratory, Inc., signed and sealed by Edmundo J. Largaespada, P. E.
   (Submitted under previous NOA No. 05–0919.04)

G. OTHERS

1. Notice of Acceptance No. **12–0127.18**, issued to Lawson Industries, Inc. for their Series "HS–8600 (Fin–Frame) Aluminum Horizontal Sliding Window – N.I.", approved on 03/29/12 and expiring on 02/23/16.

Jaime D. Gascon, P. E.
Product Control Section Supervisor
NOA No. 14–0908.15
Expiration Date: February 23, 2016
Approval Date: November 13, 2014

SERIES-8600 HORIZONTAL SLIDING WINDOW - FIN FRAME - (NON-IMPACT)

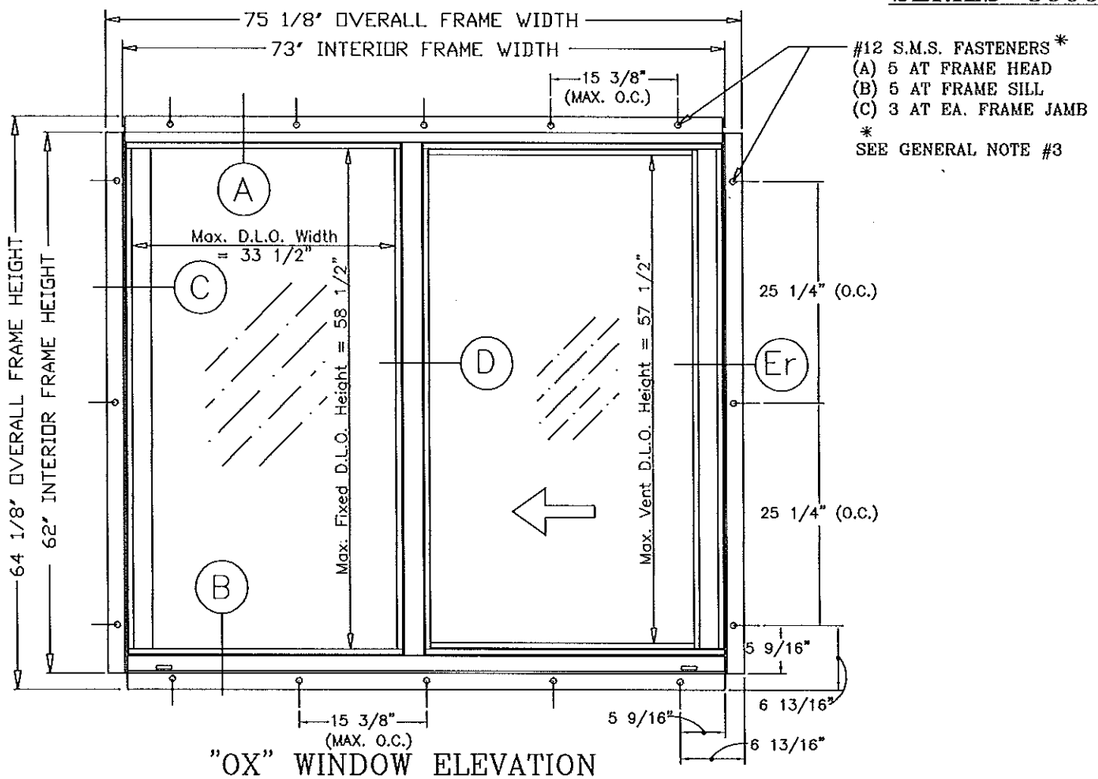

"OX" WINDOW ELEVATION

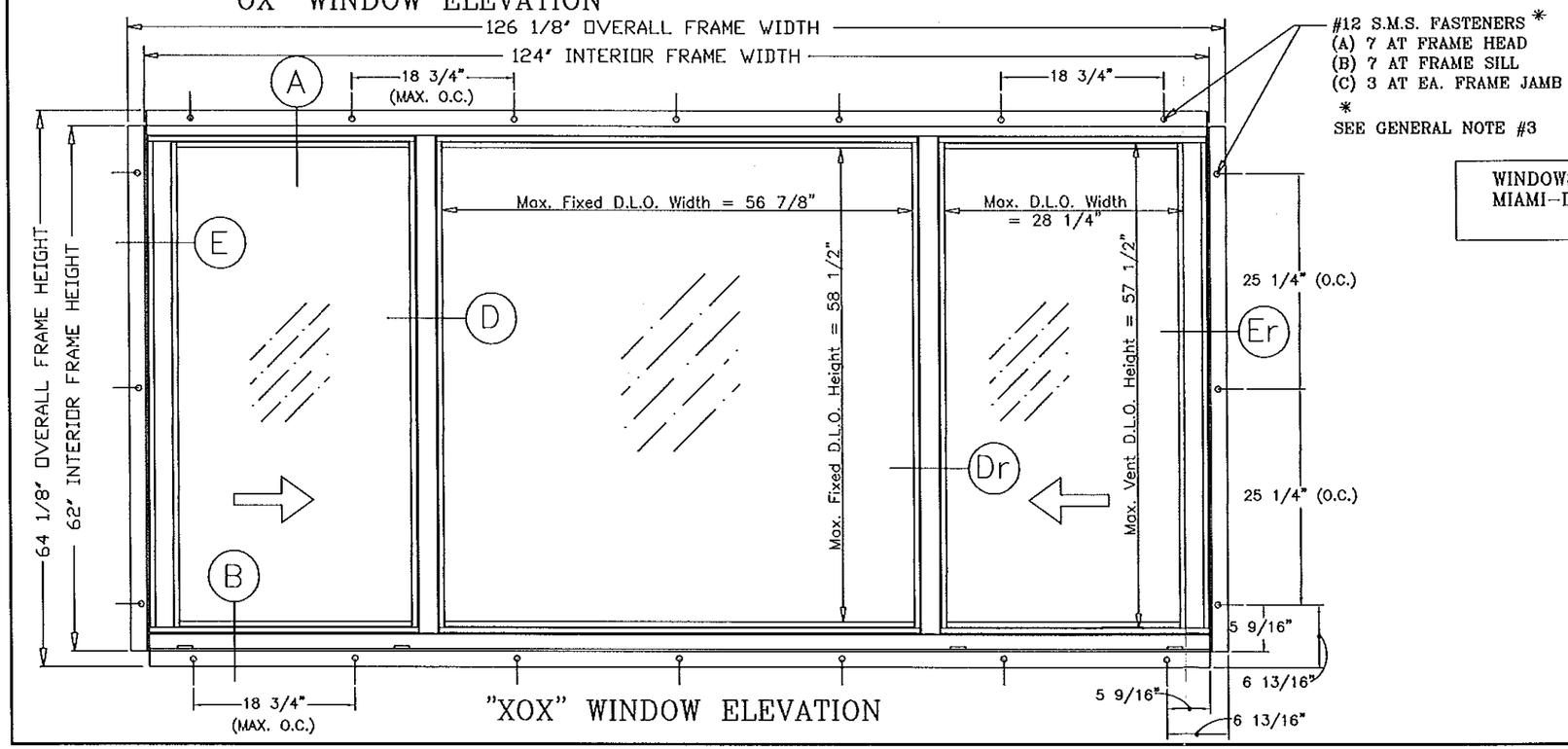

"XOX" WINDOW ELEVATION

General Notes:

1.) THIS WINDOW SYSTEM IS DESIGNED AND TESTED TO COMPLY WITH THE REQUIREMENTS OF THE 2014 FLORIDA BUILDING CODE INCLUDING HIGH VELOCITY HURRICANE ZONE (HVHZ) AND ASTM 1300-98. THIS PRODUCT IS NOT IMPACT RESISTANT. WINDOWS ARE TO BE PROTECTED WITH MIAMI-DADE COUNTY APPROVED IMPACT RESISTANT SHUTTERS.

2.) 2 X WOOD BUCKS SHALL BE INSTALLED AND ANCHORED SO THAT THE BUILDING RESISTS THE SUPERIMPOSED LOADS IN ACCORDANCE WITH REQUIREMENTS OF 2014 F.B.C. & TO BE REVIEWED BY BUILDING OFFICIAL.

3.) ANCHORS SHOWN ABOVE ARE AS PER TEST UNITS. ON CENTER (O.C.) ANCHOR SPACINGS WILL VARY WITH UNIT DIMENSIONS, AND THE NUMBER OF ANCHORS REQUIRED, AS SPECIFIED ON THE LOAD TABLES.

4.) ANCHOR CONDITIONS NOT DESCRIBED IN THESE DRAWING'S ARE TO BE ENGINEERED ON A SITE SPECIFIC BASIS, UNDER SEPARATE APPROVAL AND TO BE REVIEWED BY BUILDING OFFICIAL.

5.) XO or OX WINDOWS ARE QUALIFIED FOR USE WITH SINGLE GLAZE GLASS TYPES TABULATED HEREIN (SEE SHEET #5).

6.) XOX WINDOWS ARE QUALIFIED FOR USE WITH SINGLE GLAZE GLASS TYPES TABULATED HEREIN (SEE SHEET #6).

7.) XO, OX, XOX WINDOWS ARE QUALIFIED FOR USE WITH DOUBLE GLAZE GLASS TYPES TABULATED HEREIN (SEE SHEET #7).

8.) SEE SHEET 4 FOR LOCK DETAILS & OPTIONS.

9.) SEE SHEET 4 FOR GLAZING DETAILS & OPTIONS. (REFER TO SHEETS 5, 6, & 7 FOR DESIGN PRESSURES.

10.) TEMPERED GLASS MAY BE USED, BUT DESIGN PRESSURES ARE LIMITED TO LOAD TABLES ON SHEETS 5, 6, & 7.

11.) WOOD OPENING SHALL BE PROTECTED WITH AN APPROVED MOISTURE RESISTANT WEATHERBARRIER (BY OTHERS), PRIOR TO WINDOW INSTALLATION. (SEE SHEET #8 FOR DETAIL)

12.) MATERIALS: INCLUDING BUT NOT LIMITED TO STEEL SCREWS, THAT COME INTO CONTACT WITH OTHER DISSIMILAR MATERIALS SHALL MEET THE REQUIREMENTS OF 2014 FLORIDA BUILDING CODE SECTION 2003.8.4

WINDOWS ARE TO BE PROTECTED WITH MIAMI-DADE COUNTY APPROVED IMPACT RESISTANT SHUTTERS

PRODUCT REVISED
as complying with the Florida
Building Code
Acceptance No 14-0908.15
Expiration Date 02/23/2016
By
Miami Dade Product Control

LAWSON INDUSTRIES, INC.
8501 N.W. 90 ST.
MEDLEY, FLORIDA 33166
PH No. (305) 696-8660
MANUFACTURER OF QUALITY ALUMINUM WINDOWS AND GLASS DOORS

HS-8600 HORIZONTAL ROLLING FIN WINDOW
APPROVED ELEVATIONS, CONFIGURATIONS AND NOTES

Revision #:
Sheet: 1 OF 8
Drawing Number: L8600-0401
Product Reference Number:

Revision Notes:
A. Revised to Comply w/ 2010 FBC
B. Revised to Comply w/ 2014 FBC

Date Drawn: 05/02/05
Date Revised: 08/11/14
Scale:
Drawn By: N. ERAZO
Checked By: N. ERAZO
Revision Level: B

THOMAS J. SOTOS,
PROFESSIONAL ENGINEER
FL. LIC. # 55225

DATE

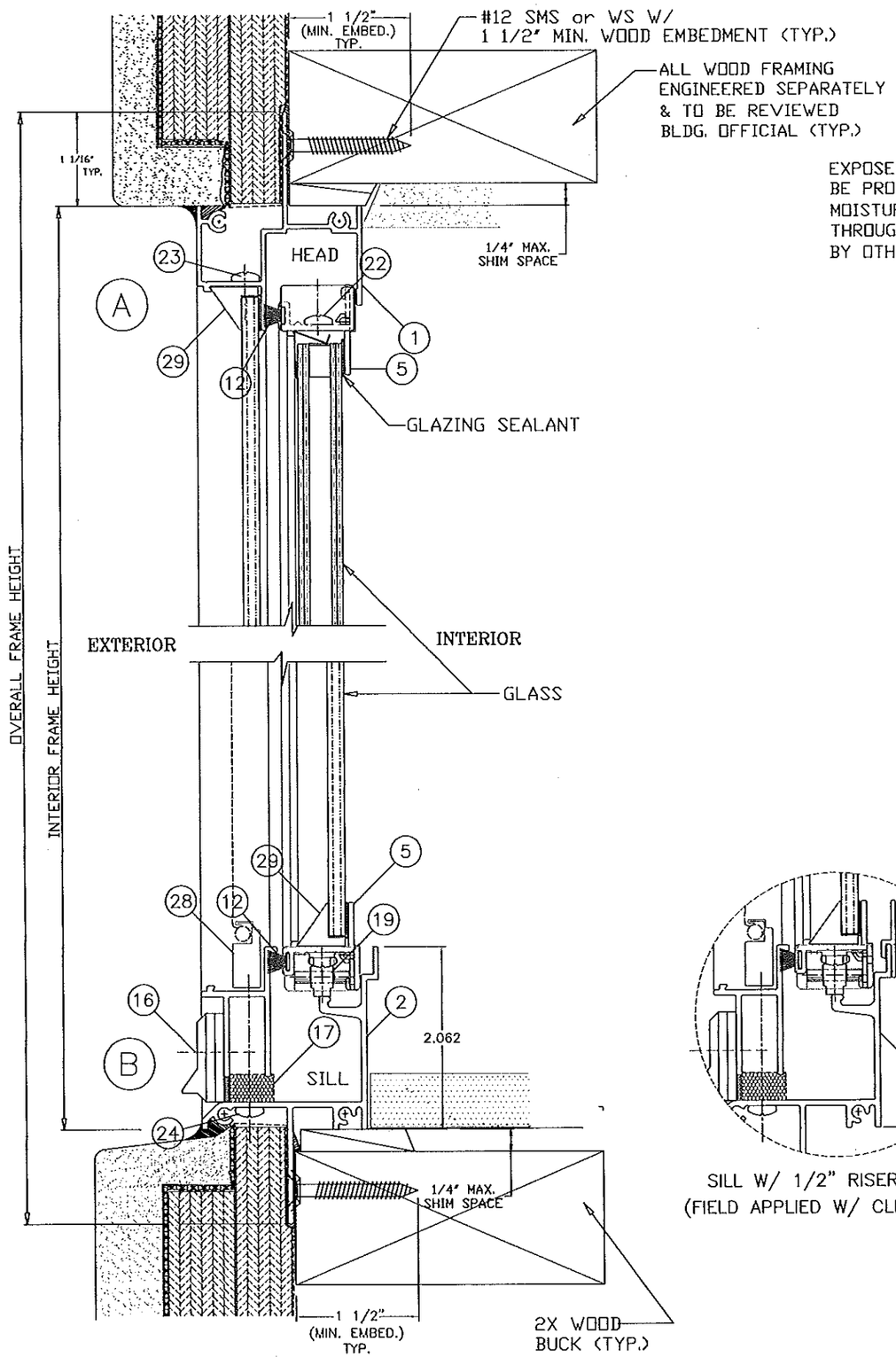

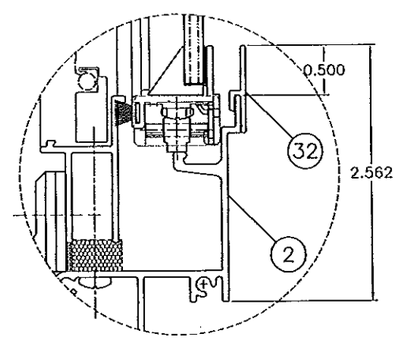

SILL W/ 1/2" RISER ADAPTER
(FIELD APPLIED W/ CLEAR SILICONE)

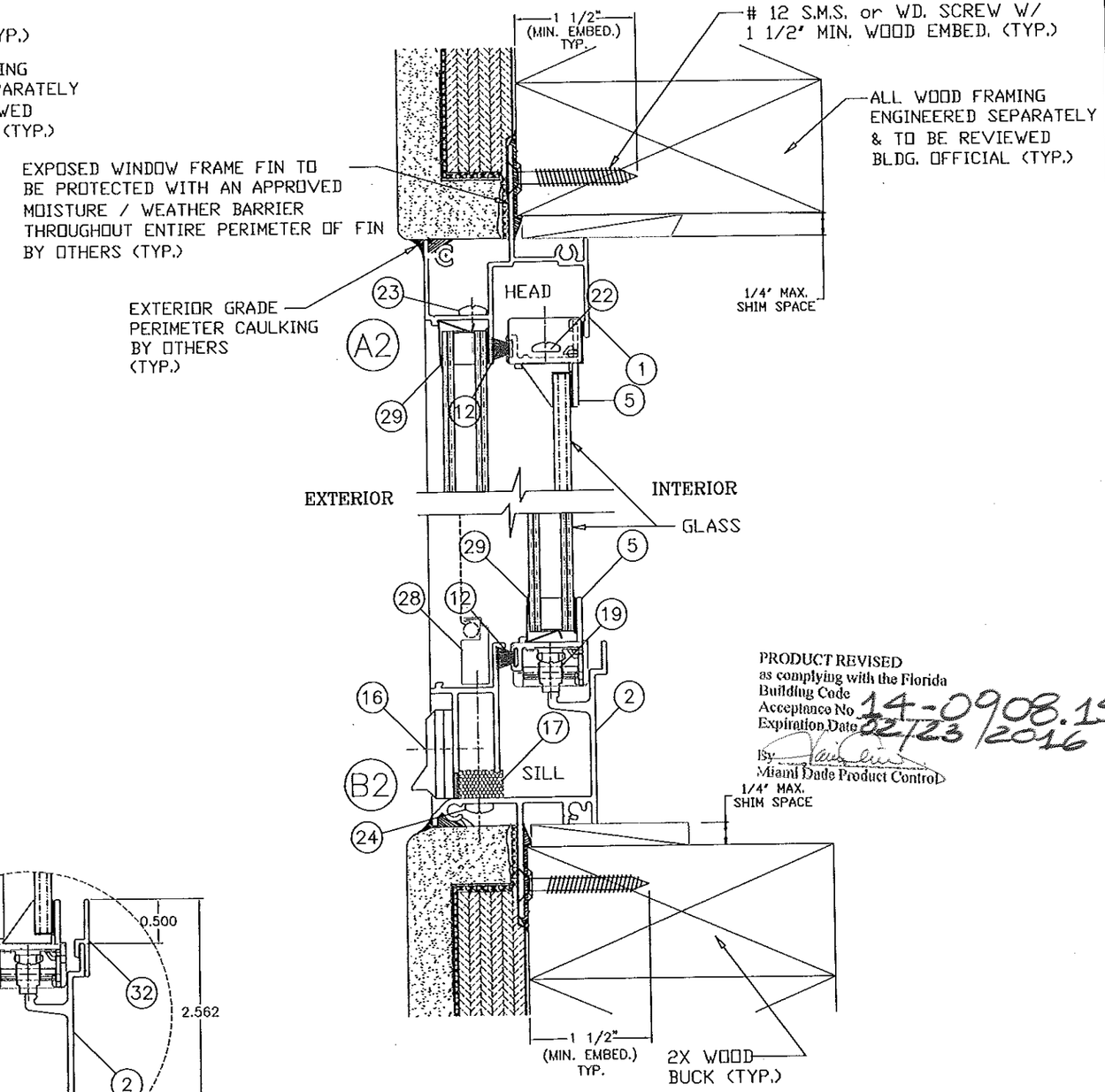

PRODUCT REVISED
as complying with the Florida
Building Code
Acceptance No 14-0908.15
Expiration Date 02/23/2016
By
Miami Dade Product Control

NOTE:
ALL ANCHORS TO BE #12 SMS OR WD. SCREW WITH A MINIMUM OF 1 1/2" PENETRATION INTO WOOD. (REFER TO LOAD TABLES FOR QUANTITIES REQUIRED)

* WHEN THE GAP BETWEEN THE WINDOW FRAME AND THE BUCK IS LESS THAN 1/8", SHIMS ARE NOT REQUIRED.

LAMSON INDUSTRIES, INC.
8501 N.W. 90 ST.
MEDLEY, FLORIDA 33166
PH No. (305) 696-8660

MANUFACTURER OF QUALITY ALUMINUM WINDOWS AND GLASS DOORS

HS-8600 HORIZONTAL ROLLING FIN WINDOW

WINDOW VERTICAL CROSS SECTION & DETAILS

Revision #:	
Sheet:	2 OF 8
Drawing Number:	L8600-0401
Product Reference Number:	
Date Drawn:	05/02/05
Date Revised:	08/11/14
Scale:	
Drawn By:	N. ERAZO
Checked By:	N. ERAZO
Revision Level:	B

Revision Notes:
A. Revised to Comply w/ 2010 FBC
B. Revised to Comply w/ 2014 FBC

THOMAS J. SOTOS
PROFESSIONAL ENGINEER
FL. LIC. # 55225

DATE

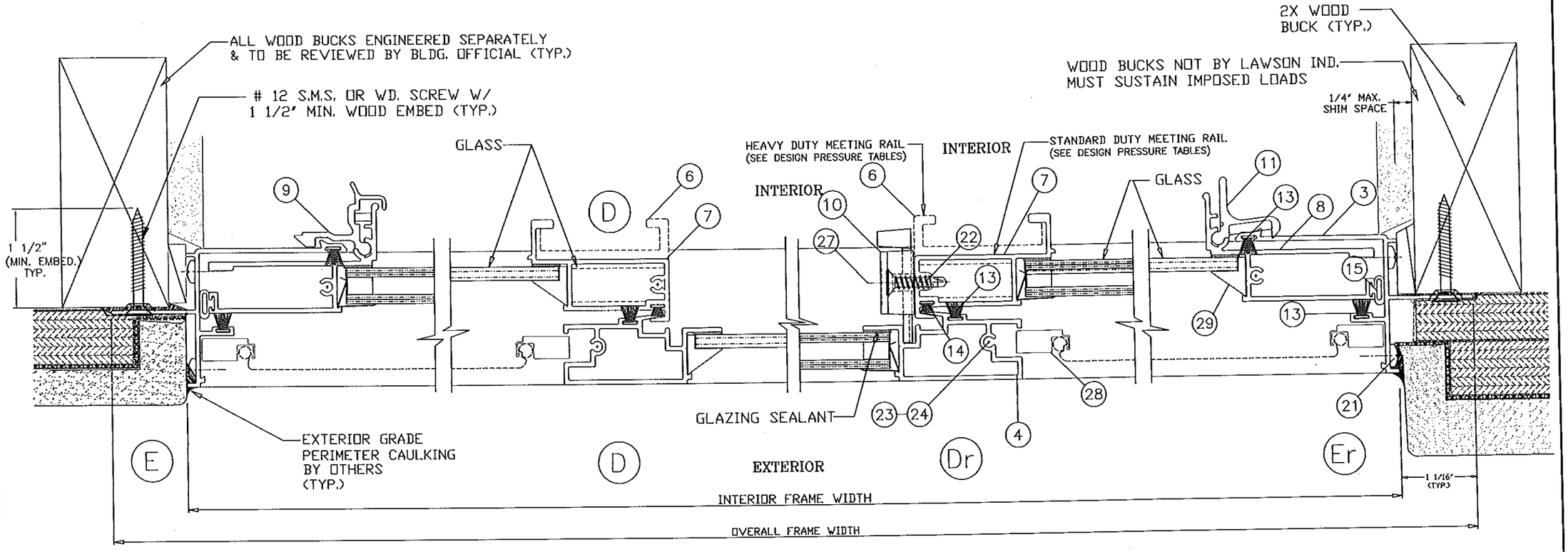

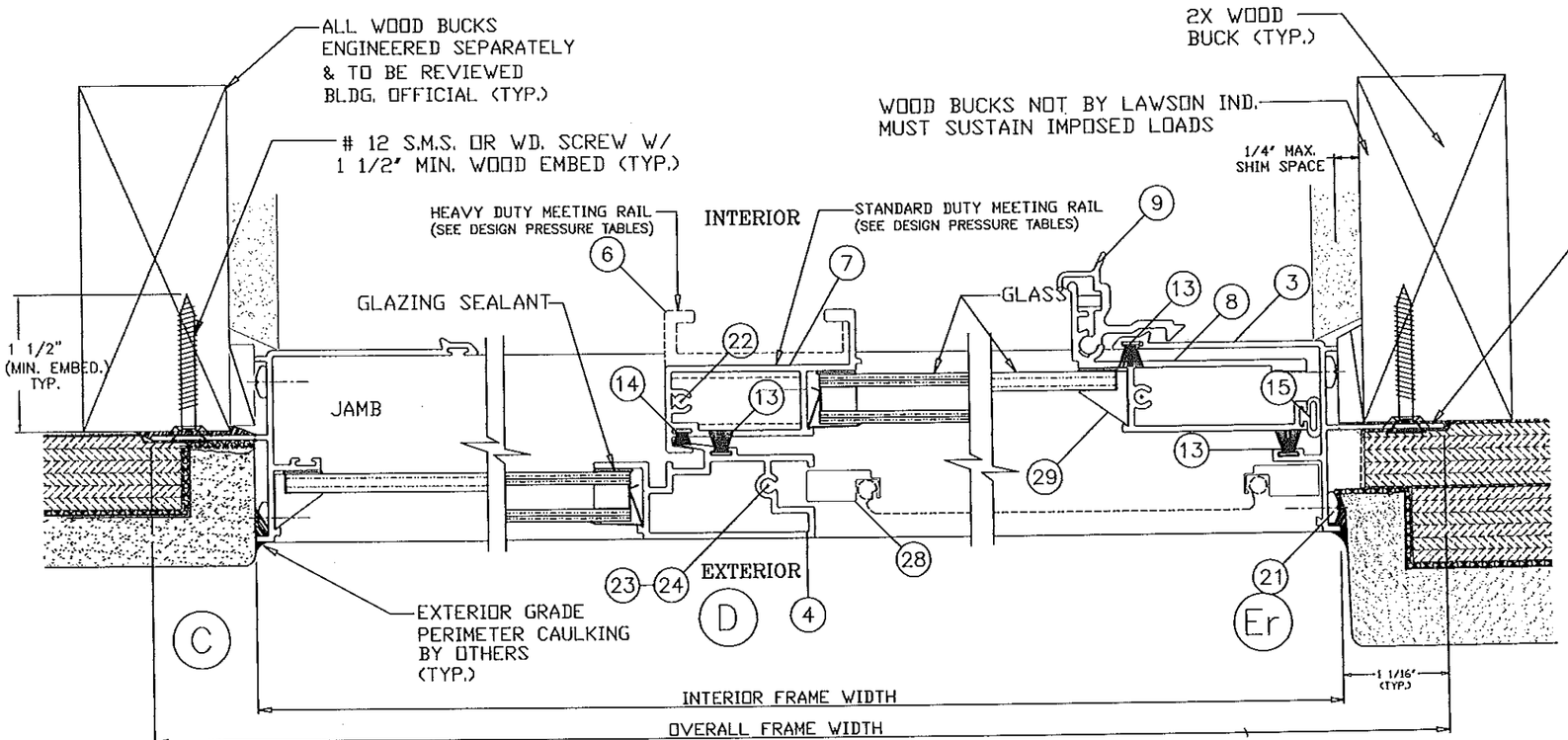

NOTE:
ALL ANCHORS TO BE #12 SMS OR WD. SCREW WITH A MINIMUM OF 1 1/2" PENETRATION INTO WOOD. (REFER TO LOAD TABLES FOR QUANTITIES REQUIRED)

* WHEN THE GAP BETWEEN THE WINDOW FRAME AND THE BUCK IS LESS THAN 1/8", SHIMS ARE NOT REQUIRED.

EXPOSED WINDOW FRAME FIN TO BE PROTECTED WITH AN APPROVED MOISTURE / WEATHER BARRIER THROUGHOUT ENTIRE PERIMETER OF FIN BY OTHERS (TYP.)

PRODUCT REVISED
as complying with the Florida
Building Code
Acceptance No 14-0908.15
Expiration Date 02/23/2016
By
Miami Dade Product Control

LAWSON INDUSTRIES, INC.
8501 N.W. 90 ST.
MEDLEY, FLORIDA 33166
PH No. (305) 696-8660

MANUFACTURER OF QUALITY ALUMINUM WINDOWS AND GLASS DOORS

HS-8600 HORIZONTAL ROLLING FIN WINDOW
CROSS SECTIONAL DETAILS FOR STD/HVY DUTY MEETING RAIL

Product Reference Number:	Drawing Number: L8600-0401
Sheet: 3 OF 8	Revision #:

Revision Notes:
A. Revised to Comply w/ 2010 FBC
B. Revised to Comply w/ 2014 FBC

Drawn By:	N. ERAZO	Date Drawn:	05/02/05
Checked By:	N. ERAZO	Date Revised:	08/11/14
Revision Level:	B	Scale:	

THOMAS J. SOTOS
PROFESSIONAL ENGINEER
FL LIC. # 55225

STATE OF FLORIDA
THOMAS J. SOTOS
No. 55225
PROFESSIONAL ENGINEER

DATE SEP 2 2014

HS8600 FIN FRAME WINDOW – BILL OF MATERIALS

ITEM #	PART #	DRWG. #	REQD.	DESCRIPTION	REMARKS
1	L-7603	LII-128	1	FRAME HEAD	6063-T6 ALUMINUM
2	L-8601	LII-134	1	FRAME SILL	6063-T5 ALUMINUM
3	L-8602	LII-130	2	FRAME JAMB	6063-T6 ALUMINUM
4	L-7504	LII-129	1 x vent	FIXED MEETING RAIL	6005-T6 ALUMINUM
5	L-7508	LII-124	2 x vent	VENT TOP / BOTTOM RAIL	6063-T5 ALUMINUM
6	L-7506	LII-126	1 x vent	VENT INTERLOCK RAIL-H.D.	6005-T6 ALUMINUM
7	L-7505	LII-125	1 x vent	VENT INTERLOCK STD. DUTY	6005-T5 ALUMINUM
8	L-7507	LII-136	1 x vent	VENT LATCH JAMB	6005-T6 ALUMINUM
9	*	LII-012	2 x vent	VENT EXTRUDED LOCK	6063-T5 ALUMINUM
10	*	*	2 x vent	VENT CAM LOCK	DIE-CAST CAM LOCK
11	*	*	2 x vent	VENT PLASTIC LOCK	SPRING LOADED
12	*	SCHLEGEL	AS REQD.	Top/Bott. Rail Weatherstrip	.187" X .280" FIN SEAL
13	*	ULTRAFAB	AS REQD.	FXD. RAIL WEATHERSTRIP	.187" X 250" FIN SEAL
14	*	ULTRAFAB	AS REQD.	VENT LOCK WEATHERSTRIP	.187" X 150" PILE
15	*	*	AS REQ'D.	VENT JAMB WEATHERSTRIP	3/8" DIA. BULB
16	*	*	2	WEEP HOLE COVER W/ FLAP	1 1/2" wide x 1/4" hi weep
17	*	*	2	SILL OPEN CELL FOAM PAD	1/2"x3/8"x 1 3/4" LONG
18	*	*	2	SILL/JAMB JOINT GASKET	1/16" CLOSED CELL FOAM
19	L-763	HC-032	2	VENT ROLLER ASSEMBLY	2 X EA. VENT BOTTOM RAIL
20	L-7524	*	6	VENT FACE GUIDE	3 PER VENT HOR. RAIL
21	*	*	8	FRAME ASSEMBLY SCREWS	# 8 X 5/8" P.H. PHIL.
22	*	*	4 x vent	VENT ASSEMBLY SCREWS	# 8 X 1" P.H. PHILLIPS
23	*	*	1 X RAIL	MTG. RAIL SCREW @ HEAD	# 8 X 1" P.H. PHILLIPS
24	*	*	1 X RAIL	MTG. RAIL SCREW @ SILL	# 8 X 2" P.H. PHILLIPS
25	*	*	7	FRAME INSTALL'N SCREW	#12 X 1 3/4" F.H. / PHI.
26	*	*	6	FRAME INSTALL'N SCREW	#12 X 1 1/2" F.H. / PHI.
27	*	*	2 X LOCK	CAM LOCK ATTC'NT SCREW	#8 X 7/8" F.H. / PHI.
28	*	*	1 x vent	INSECT SCREEN	*
29	L-7515/16	*	AS REQD.	GLAZING BEAD	ROLL FORMED ALUMINUM
30	*	*	AS REQ'D.	GLASS	See Detail @ sheet 4 of 8
31	*	*	AS REQ'D	GLAZING SILICONE	See Detail @ sheet 4 of 8
32	L-8503	LII-132	1	FRAME SILL 1/2" RISER	6063-T6 ALUMINUM
33	*	774-25B-767	AS REQ'D	'TruSeal' Swiggle Seal	Black -1/4" air space

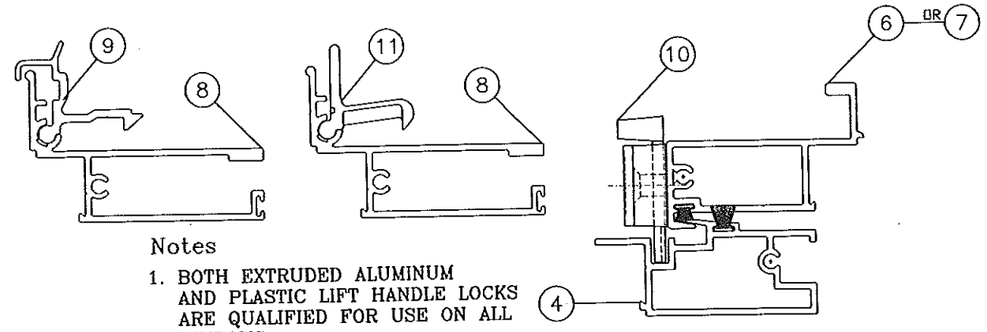

Notes

1. BOTH EXTRUDED ALUMINUM AND PLASTIC LIFT HANDLE LOCKS ARE QUALIFIED FOR USE ON ALL WINDOWS.
2. THE CAM LOCK IS QUALIFIED FOR USE ON THE 1/8" ANNEALED AND 3/16" ANNEALED WINDOWS ONLY.
3. ONLY TWO (2) LOCKS ARE REQUIRED PER EACH VENT.

LOCK (LATCH AND SWEEP) OPTIONS

Glazing Detail & Description

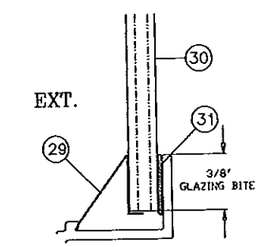

MONOLITHIC GLASS – SINGLE GLAZE
ANNEALED OR TEMPERED
1/8", 3/16" OR 1/4" THICK
(SEE DESIGN PRESSURE TABLES)

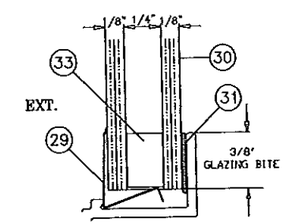

1/2" OVERALL INSULATED GLASS
CONSIST OF:
1/8" ANNEALED OR TEMPERED LITE
+ 1/4" AIR SPACE
+ 1/8" ANNEALED OR TEMPERED LITE
(SEE DESIGN PRESSURE TABLES)

(31) **Glazing Sealant Types & Options**

1) Schnee-Morehead 5731
2) Schnee-Morehead 5732
3) GE SCS 1000 Clear Silcone
4) Dow Corning Clear Silcone

PRODUCT REVISED
as complying with the Florida
Building Code
Acceptance No 14-0908.15
Expiration Date 02/23/2016
By
Miami Dade Product Control

LAMSON INDUSTRIES, INC.
8501 N.W. 90 ST.
MEDLEY, FLORIDA 33166
PH No. (305) 696-8660

MANUFACTURER OF QUALITY ALUMINUM WINDOWS AND GLASS DOORS

HS-8600 HORIZONTAL ROLLING FIN WINDOW
BILL OF MATERIALS, GLAZING DETAILS & LOCK OPTIONS

Revision #:
Sheet: 4 OF 8
Drawing Number: L8600-0401
Product Reference Number:

Revision Notes:
A. Revised to Comply w/ 2010 FBC
B. Revised to Comply w/ 2014 FBC

Date Drawn: 05/02/05
Date Revised: 08/11/14
Drawn By: N. ERAZO
Checked By: N. ERAZO
Scale:
Revision Level: B

THOMAS J. SOTOS
PROFESSIONAL ENGINEER
FL REG. # 55225

DATE

8600 Non Impact Horizontal Sliding Window
Test # FTL 4413 - 1/4" Annealed Fin Frame (XO or OX)
w/ HEAVY DUTY MEETING RAIL & STANDARD SILL

Width (in)	Height (in)	DP(+) psf	DP(-) psf	Anchors Head & Sill	Anchors Each Jamb
25.125	25.125	56.7	100.0	3	2
37.125	25.125	56.7	100.0	5	3
49.125	25.125	56.7	100.0	7	3
61.125	25.125	56.7	100.0	9	3
73.125	25.125	56.7	100.0	11	3
25.125	37.125	56.7	100.0	4	3
37.125	37.125	56.7	100.0	6	4
49.125	37.125	56.7	100.0	9	5
61.125	37.125	56.7	100.0	11	5
73.125	37.125	56.7	90.8	13	5
25.125	49.125	56.7	100.0	5	4
37.125	49.125	56.7	100.0	8	6
49.125	49.125	56.7	100.0	11	7
61.125	49.125	56.7	78.3	11	6
73.125	49.125	56.7	66.3	11	6
25.125	61.125	56.7	100.0	6	5
37.125	61.125	56.7	95.6	9	7
49.125	61.125	56.7	76.7	10	7
61.125	61.125	56.7	62.8	10	6
73.125	61.125	50.9	50.9	11	6
27.625	27.125	56.7	100.0	4	3
27.625	39.5	56.7	100.0	5	4
27.625	51.75	56.7	100.0	6	5
27.625	59.125	56.7	100.0	7	5
27.625	64.125	56.7	100.0	7	6
38.125	27.125	56.7	100.0	5	3
38.125	39.5	56.7	100.0	7	4
38.125	51.75	56.7	100.0	8	6
38.125	59.125	56.7	97.3	9	7
38.125	64.125	56.7	88.4	9	7
54.25	27.125	56.7	100.0	8	3
54.25	39.5	56.7	100.0	10	5
54.25	51.75	56.7	88.1	11	7
54.25	59.125	56.7	74.4	10	7
54.25	64.125	56.7	67.1	10	7
75.125	27.125	56.7	100.0	12	3
75.125	39.5	56.7	82.3	13	5
75.125	51.75	56.7	60.5	11	6
75.125	59.125	51.7	51.7	11	6
75.125	64.125	47.3	47.3	11	6

Pressure Limited to Negative 100psf.

8600 Non Impact Horizontal Sliding Window
Test # FTL 4413 - 1/4" Annealed Fin Frame (XO or OX)
w/ HEAVY DUTY MEETING RAIL & HI-RISE SILL

Width (in)	Height (in)	DP(+) psf	DP(-) psf	Anchors Head & Sill	Anchors Each Jamb
25.125	25.125	73.3	100.0	3	2
37.125	25.125	73.3	100.0	5	3
49.125	25.125	73.3	100.0	7	3
61.125	25.125	73.3	100.0	9	3
73.125	25.125	73.3	100.0	11	3
25.125	37.125	73.3	100.0	4	3
37.125	37.125	73.3	100.0	6	4
49.125	37.125	73.3	100.0	9	5
61.125	37.125	73.3	100.0	11	5
73.125	37.125	73.3	90.8	13	5
25.125	49.125	73.3	100.0	5	4
37.125	49.125	73.3	100.0	8	6
49.125	49.125	73.3	100.0	11	7
61.125	49.125	73.3	78.3	11	6
73.125	49.125	66.3	66.3	11	6
25.125	61.125	73.3	100.0	6	5
37.125	61.125	73.3	95.6	9	7
49.125	61.125	73.3	76.7	10	7
61.125	61.125	62.8	62.8	10	6
73.125	61.125	50.9	50.9	11	6
27.625	27.125	73.3	100.0	4	3
27.625	39.5	73.3	100.0	5	4
27.625	51.75	73.3	100.0	6	5
27.625	59.125	73.3	100.0	7	5
27.625	64.125	73.3	100.0	7	6
38.125	27.125	73.3	100.0	5	3
38.125	39.5	73.3	100.0	7	4
38.125	51.75	73.3	100.0	8	6
38.125	59.125	73.3	97.3	9	7
38.125	64.125	73.3	88.4	9	7
54.25	27.125	73.3	100.0	8	3
54.25	39.5	73.3	100.0	10	5
54.25	51.75	73.3	88.1	11	7
54.25	59.125	73.3	74.4	10	7
54.25	64.125	67.1	67.1	10	7
75.125	27.125	73.3	100.0	12	3
75.125	39.5	73.3	82.3	13	5
75.125	51.75	60.5	60.5	11	6
75.125	59.125	51.7	51.7	11	6
75.125	64.125	47.3	47.3	11	6

Pressure Limited to Negative 100psf.

8600 Non Impact Horizontal Sliding Window
Test # FTL 4456 - 3/16" Annealed Fin Frame (XO or OX)
w/ HEAVY DUTY MEETING RAIL & STANDARD SILL

Width (in)	Height (in)	DP(+) psf	DP(-) psf	Anchors Head & Sill	Anchors Each Jamb
25.125	25.125	56.7	100.0	3	2
37.125	25.125	56.7	100.0	5	3
49.125	25.125	56.7	100.0	7	3
61.125	25.125	56.7	100.0	9	3
73.125	25.125	56.7	100.0	11	3
25.125	37.125	56.7	100.0	4	3
37.125	37.125	56.7	100.0	6	4
49.125	37.125	56.7	99.8	9	5
61.125	37.125	56.7	81.3	9	4
73.125	37.125	56.7	70.2	10	4
25.125	49.125	56.7	100.0	5	4
37.125	49.125	56.7	100.0	8	6
49.125	49.125	56.7	76.5	8	5
61.125	49.125	56.7	58.1	8	5
73.125	49.125	51.5	51.5	9	4
25.125	61.125	56.7	100.0	6	5
37.125	61.125	56.7	86.0	8	6
49.125	61.125	56.7	64.9	9	6
61.125	61.125	44.9	44.9	8	5
73.125	61.125	39.7	39.7	8	5
27.625	27.125	56.7	100.0	4	3
27.625	39.5	56.7	100.0	5	4
27.625	51.75	56.7	100.0	6	5
27.625	59.125	56.7	100.0	7	5
27.625	64.125	56.7	100.0	7	6
38.125	27.125	56.7	100.0	5	3
38.125	39.5	56.7	100.0	7	4
38.125	51.75	56.7	100.0	8	6
38.125	59.125	56.7	87.6	8	6
38.125	64.125	56.7	79.5	8	6
54.25	27.125	56.7	100.0	8	3
54.25	39.5	56.7	83.6	9	4
54.25	51.75	56.7	61.6	8	5
54.25	59.125	54.9	54.9	8	5
54.25	64.125	51.5	51.5	8	5
75.125	27.125	56.7	90.6	11	3
75.125	39.5	56.7	63.8	10	4
75.125	51.75	48.1	48.1	9	4
75.125	59.125	40.8	40.8	9	5
75.125	64.125	37.2	37.2	8	5

Pressure Limited to Negative 100psf.

8600 Non Impact Horizontal Sliding Window
Test # FTL 4456 - 3/16" Annealed Fin Frame (XO or OX)
w/ HEAVY DUTY MEETING RAIL & HI-RISE SILL

Width (in)	Height (in)	DP(+) psf	DP(-) psf	Anchors Head & Sill	Anchors Each Jamb
25.125	25.125	73.3	100.0	3	2
37.125	25.125	73.3	100.0	5	3
49.125	25.125	73.3	100.0	7	3
61.125	25.125	73.3	100.0	9	3
73.125	25.125	73.3	100.0	11	3
25.125	37.125	73.3	100.0	4	3
37.125	37.125	73.3	100.0	6	4
49.125	37.125	73.3	99.8	9	5
61.125	37.125	73.3	81.3	9	4
73.125	37.125	70.2	70.2	10	4
25.125	49.125	73.3	100.0	5	4
37.125	49.125	73.3	100.0	8	6
49.125	49.125	73.3	76.5	8	5
61.125	49.125	58.1	58.1	8	5
73.125	49.125	51.5	51.5	9	4
25.125	61.125	73.3	100.0	6	5
37.125	61.125	73.3	86.0	8	6
49.125	61.125	64.9	64.9	9	6
61.125	61.125	44.9	44.9	8	5
73.125	61.125	39.7	39.7	8	5
27.625	27.125	73.3	100.0	4	3
27.625	39.5	73.3	100.0	5	4
27.625	51.75	73.3	100.0	6	5
27.625	59.125	73.3	100.0	7	5
27.625	64.125	73.3	100.0	7	6
38.125	27.125	73.3	100.0	5	3
38.125	39.5	73.3	100.0	7	4
38.125	51.75	73.3	100.0	8	6
38.125	59.125	73.3	87.6	8	6
38.125	64.125	73.3	79.5	8	6
54.25	27.125	73.3	100.0	8	3
54.25	39.5	73.3	83.6	9	4
54.25	51.75	61.6	61.6	8	5
54.25	59.125	54.9	54.9	8	5
54.25	64.125	51.5	51.5	8	5
75.125	27.125	73.3	90.6	11	3
75.125	39.5	63.8	63.8	10	4
75.125	51.75	48.1	48.1	9	4
75.125	59.125	40.8	40.8	9	5
75.125	64.125	37.2	37.2	8	5

Pressure Limited to Negative 100psf.

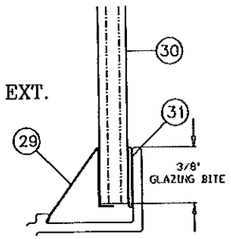

MONOLITHIC GLASS – SINGLE GLAZE
ANNEALED OR TEMPERED
1/8", 3/16" OR 1/4" THICK

(SEE DESIGN PRESSURE TABLES)

Note:

1. WINDOW WIDTHS & HEIGHTS ARE THE OVERALL FIN FRAME DIMENSIONS.

8600 Non Impact Horizontal Sliding Window
Test # FTL 4553 - 3/16" Annealed Fin Frame (XO or OX)
w/ STANDARD MEETING RAIL & STANDARD SILL

Width (in)	Height (in)	DP(+) psf	DP(-) psf	Anchors Head & Sill	Anchors Each Jamb
25.125	25.125	56.7	100.0	3	2
37.125	25.125	56.7	100.0	5	3
49.125	25.125	56.7	100.0	7	3
61.125	25.125	56.7	100.0	9	3
73.125	25.125	56.7	100.0	11	3
25.125	37.125	56.7	100.0	4	3
37.125	37.125	56.7	100.0	6	4
49.125	37.125	56.7	95.4	8	5
61.125	37.125	56.7	81.3	9	4
73.125	37.125	56.7	70.2	10	4
25.125	49.125	56.7	100.0	5	4
37.125	49.125	56.7	78.7	6	5
49.125	49.125	56.7	64.3	7	4
61.125	49.125	56.3	56.3	8	4
73.125	49.125	51.5	51.5	9	4
27.625	27.125	56.7	100.0	4	3
27.625	39.5	56.7	100.0	5	4
27.625	51.75	56.7	94.0	6	4
38.125	27.125	56.7	100.0	5	3
38.125	39.5	56.7	100.0	7	4
38.125	51.75	56.7	72.3	6	5
54.25	27.125	56.7	100.0	8	3
54.25	39.5	56.7	82.7	9	4
54.25	51.75	56.2	56.2	7	5
75.125	27.125	56.7	90.6	11	3
75.125	39.5	56.7	63.8	10	4
75.125	51.75	47.0	47.0	9	4

Pressure Limited to Negative 100psf.

8600 Non Impact Horizontal Sliding Window
Test # FTL 4553 - 3/16" Annealed Fin Frame (XO or OX)
w/ STANDARD MEETING RAIL & HI-RISE SILL

Width (in)	Height (in)	DP(+) psf	DP(-) psf	Anchors Head & Sill	Anchors Each Jamb
25.125	25.125	73.3	100.0	3	2
37.125	25.125	73.3	100.0	5	3
49.125	25.125	73.3	100.0	7	3
61.125	25.125	73.3	100.0	9	3
73.125	25.125	73.3	100.0	11	3
25.125	37.125	73.3	100.0	4	3
37.125	37.125	73.3	100.0	6	4
49.125	37.125	73.3	95.4	8	5
61.125	37.125	73.3	81.3	9	4
73.125	37.125	70.2	70.2	10	4
25.125	49.125	73.3	100.0	5	4
37.125	49.125	73.3	78.7	6	5
49.125	49.125	64.3	64.3	7	4
61.125	49.125	56.3	56.3	8	4
73.125	49.125	51.5	51.5	9	4
27.625	27.125	73.3	100.0	4	3
27.625	39.5	73.3	100.0	5	4
27.625	51.75	73.3	94.0	6	4
38.125	27.125	73.3	100.0	5	3
38.125	39.5	73.3	100.0	7	4
38.125	51.75	72.3	72.3	6	5
54.25	27.125	73.3	100.0	8	3
54.25	39.5	73.3	82.7	9	4
54.25	51.75	56.2	56.2	7	5
75.125	27.125	73.3	90.6	11	3
75.125	39.5	63.8	63.8	10	4
75.125	51.75	47.0	47.0	9	4

Pressure Limited to Negative 100psf.

8600 Non Impact Horizontal Sliding Window
Test # FTL 4547 - 1/8" Annealed Fin Frame (XO or OX)
w/ STANDARD MEETING RAIL & STANDARD SILL

Width (in)	Height (in)	DP(+) psf	DP(-) psf	Anchors Head & Sill	Anchors Each Jamb
25.125	25.125	56.7	100.0	3	2
37.125	25.125	56.7	100.0	5	3
49.125	25.125	56.7	86.2	6	2
61.125	25.125	56.7	68.2	6	2
73.125	25.125	53.6	53.6	6	2
25.125	37.125	56.7	100.0	4	3
37.125	37.125	56.7	69.9	5	3
49.125	37.125	55.0	55.0	5	3
61.125	37.125	49.7	49.7	6	3
73.125	37.125	43.3	43.3	6	3
25.125	49.125	56.7	90.0	5	4
37.125	49.125	55.9	55.9	5	3
49.125	49.125	37.7	37.7	5	3
61.125	49.125	35.8	35.8	5	3
73.125	49.125	32.8	32.8	6	3
27.625	27.125	56.7	100.0	4	3
27.625	39.5	56.7	100.0	5	4
27.625	51.75	56.7	78.2	5	4
38.125	27.125	56.7	98.5	5	3
38.125	39.5	56.7	62.1	5	3
38.125	51.75	51.1	51.1	5	3
54.25	27.125	56.7	74.3	6	2
54.25	39.5	49.0	49.0	6	3
54.25	51.75	33.6	33.6	5	3
75.125	27.125	50.5	50.5	6	2
75.125	39.5	40.1	40.1	6	3
75.125	51.75	30.3	30.3	6	3

Pressure Limited to Negative 100psf.

8600 Non Impact Horizontal Sliding Window
Test # FTL 4547 - 1/8" Annealed Fin Frame (XO or OX)
w/ STANDARD MEETING RAIL & HI-RISE SILL

Width (in)	Height (in)	DP(+) psf	DP(-) psf	Anchors Head & Sill	Anchors Each Jamb
25.125	25.125	73.3	100.0	3	2
37.125	25.125	73.3	100.0	5	3
49.125	25.125	73.3	86.2	6	2
61.125	25.125	68.2	68.2	6	2
73.125	25.125	53.6	53.6	6	2
25.125	37.125	73.3	100.0	4	3
37.125	37.125	69.9	69.9	5	3
49.125	37.125	55.0	55.0	5	3
61.125	37.125	49.7	49.7	6	3
73.125	37.125	43.3	43.3	6	3
25.125	49.125	73.3	90.0	5	4
37.125	49.125	55.9	55.9	5	3
49.125	49.125	37.7	37.7	5	3
61.125	49.125	35.8	35.8	5	3
73.125	49.125	32.8	32.8	6	3
27.625	27.125	73.3	100.0	4	3
27.625	39.5	73.3	100.0	5	4
27.625	51.75	73.3	78.2	5	4
38.125	27.125	73.3	98.5	5	3
38.125	39.5	62.1	62.1	5	3
38.125	51.75	51.1	51.1	5	3
54.25	27.125	73.3	74.3	6	2
54.25	39.5	49.0	49.0	6	3
54.25	51.75	33.6	33.6	5	3
75.125	27.125	50.5	50.5	6	2
75.125	39.5	40.1	40.1	6	3
75.125	51.75	30.3	30.3	6	3

Pressure Limited to Negative 100psf.

PRODUCT REVISED
as complying with the Florida
Building Code
Acceptance No 14-0908.15
Expiration Date 02/23/2016
By
Miami Dade Product Control

LAMSON INDUSTRIES, INC.
8501 N.W. 90 ST.
MEDLEY, FLORIDA 33166
PH No. (305) 696-8660

MANUFACTURER OF QUALITY ALUMINUM WINDOWS AND GLASS DOORS

HS-8600 HORIZONTAL ROLLING FIN WINDOW

GLASS LOAD CHARTS & MONOLITHIC GLAZING DETAIL (XO or OX)

Product Reference Number: | Drawing Number: L8600-0401 | Sheet: 5 OF 8 | Revision #:

Revision Notes:
A. Revised to Comply w/ 2010 FBC
B. Revised to Comply w/ 2014 FBC

Drawn By: N. ERAZO | Date Drawn: 05/02/05
Checked By: N. ERAZO | Date Revised: 08/11/14
Revision Level: B | Scale:

THOMAS I. SOTOS
PROFESSIONAL ENGINEER
FL LIC # 55225

DATE SEP 2 2014

8600 Non Impact Horizontal Sliding Window
Test # FTL 4429 - 1/4" Annealed Fin Frame (XOX)
w/ HEAVY DUTY MEETING RAIL & STANDARD SILL

Width (in)	Height (in)	DP(+) psf	DP(-) psf	Anchors Head & Sill	Anchors Each Jamb
73.125	25.125	56.7	100.0	11	2
85.125	25.125	56.7	100.0	13	3
97.125	25.125	56.7	100.0	15	3
109.125	25.125	56.7	100.0	17	3
121.125	25.125	56.7	100.0	19	3
73.125	37.125	56.7	94.2	15	4
85.125	37.125	56.7	79.2	14	4
97.125	37.125	56.7	68.1	14	3
109.125	37.125	56.7	58.9	14	3
121.125	37.125	52.1	52.1	14	3
73.125	49.125	56.7	68.1	14	4
85.125	49.125	56.7	59.5	14	4
97.125	49.125	54.4	54.4	15	4
109.125	49.125	48.6	48.6	15	4
121.125	49.125	43.9	43.9	15	4
73.125	61.125	52.1	52.1	13	4
85.125	61.125	56.7	63.3	18	5
97.125	61.125	43.8	43.8	14	4
109.125	61.125	40.7	40.7	15	4
121.125	61.125	38.4	38.4	16	4
54.25	27.125	56.7	100.0	9	2
54.25	39.5	56.7	100.0	12	4
54.25	51.75	56.7	81.3	13	4
54.25	59.125	56.7	73.4	13	4
54.25	64.125	56.7	69.0	13	4
75.125	27.125	56.7	100.0	12	3
75.125	39.5	56.7	82.4	14	4
75.125	51.75	56.7	60.6	13	4
75.125	59.125	51.8	51.8	13	4
75.125	64.125	47.4	47.4	13	4
107.375	27.125	56.7	89.5	16	3
107.375	39.5	51.2	51.2	13	3
107.375	51.75	43.7	43.7	14	4
107.375	59.125	40.2	40.2	15	4
107.375	64.125	37.5	37.5	15	4
112.25	27.125	56.7	97.8	18	3
112.25	39.5	56.7	59.7	16	3
112.25	51.75	49.7	49.7	16	4
112.25	59.125	43.6	43.6	16	4
112.25	64.125	40.5	40.5	16	4

Pressure Limited to Negative 100psf.

8600 Non Impact Horizontal Sliding Window
Test # FTL 4429 - 1/4" Annealed Fin Frame (XOX)
w/ HEAVY DUTY MEETING RAIL & HI-RISE SILL

Width (in)	Height (in)	DP(+) psf	DP(-) psf	Anchors Head & Sill	Anchors Each Jamb
73.125	25.125	73.3	100.0	11	2
85.125	25.125	73.3	100.0	13	3
97.125	25.125	73.3	100.0	15	3
109.125	25.125	73.3	100.0	17	3
121.125	25.125	73.3	100.0	19	3
73.125	37.125	73.3	94.2	15	4
85.125	37.125	73.3	79.2	14	4
97.125	37.125	68.1	68.1	14	3
109.125	37.125	58.9	58.9	14	3
121.125	37.125	52.1	52.1	14	3
73.125	49.125	68.1	68.1	14	4
85.125	49.125	59.5	59.5	14	4
97.125	49.125	54.4	54.4	15	4
109.125	49.125	48.6	48.6	15	4
121.125	49.125	43.9	43.9	15	4
73.125	61.125	52.1	52.1	13	4
85.125	61.125	63.3	63.3	18	5
97.125	61.125	43.8	43.8	14	4
109.125	61.125	40.7	40.7	15	4
121.125	61.125	38.4	38.4	16	4
54.25	27.125	73.3	100.0	9	2
54.25	39.5	73.3	100.0	12	4
54.25	51.75	73.3	81.3	13	4
54.25	59.125	73.3	73.4	13	4
54.25	64.125	69.0	69.0	13	4
75.125	27.125	73.3	100.0	12	3
75.125	39.5	73.3	82.4	14	4
75.125	51.75	60.6	60.6	13	4
75.125	59.125	51.8	51.8	13	4
75.125	64.125	47.4	47.4	13	4
107.375	27.125	73.3	89.5	16	3
107.375	39.5	51.2	51.2	13	3
107.375	51.75	43.7	43.7	14	4
107.375	59.125	40.2	40.2	15	4
107.375	64.125	37.5	37.5	15	4
112.25	27.125	73.3	97.8	18	3
112.25	39.5	59.7	59.7	16	3
112.25	51.75	49.7	49.7	16	4
112.25	59.125	43.6	43.6	16	4
112.25	64.125	40.5	40.5	16	4

Pressure Limited to Negative 100psf.

8600 Non Impact Horizontal Sliding Window
Test # FTL 4457 - 3/16" Annealed Fin Frame (XOX)
w/ HEAVY DUTY MEETING RAIL & STANDARD SILL

Width (in)	Height (in)	DP(+) psf	DP(-) psf	Anchors Head & Sill	Anchors Each Jamb
73.125	25.125	56.7	100.0	11	2
85.125	25.125	56.7	91.5	12	2
97.125	25.125	56.7	81.6	12	2
109.125	25.125	56.7	75.9	13	2
121.125	25.125	56.7	71.5	14	2
73.125	37.125	56.7	72.6	11	3
85.125	37.125	56.7	60.8	11	3
97.125	37.125	52.1	52.1	11	3
109.125	37.125	45.9	45.9	11	2
121.125	37.125	40.2	40.2	11	2
73.125	49.125	52.1	52.1	10	3
85.125	49.125	48.4	48.4	12	3
97.125	49.125	44.5	44.5	12	3
109.125	49.125	39.9	39.9	12	3
121.125	49.125	36.4	36.4	12	3
73.125	61.125	40.2	40.2	10	3
85.125	61.125	38.3	38.3	11	3
97.125	61.125	36.4	36.4	12	3
109.125	61.125	33.5	33.5	13	3
121.125	61.125	30.8	30.8	13	3
54.25	27.125	56.7	100.0	9	2
54.25	39.5	56.7	80.4	10	3
54.25	51.75	56.7	58.0	9	3
54.25	59.125	50.4	50.4	9	3
54.25	64.125	47.4	47.4	9	3
75.125	27.125	56.7	90.8	11	3
75.125	39.5	56.7	64.0	11	3
75.125	51.75	48.2	48.2	11	3
75.125	59.125	40.8	40.8	10	3
75.125	64.125	37.2	37.2	10	3
107.375	27.125	56.7	60.9	11	2
107.375	39.5	40.6	40.6	10	2
107.375	51.75	36.2	36.2	12	3
107.375	59.125	32.7	32.7	12	3
107.375	64.125	30.1	30.1	12	3
112.25	27.125	56.7	68.0	13	2
112.25	39.5	47.6	47.6	13	3
112.25	51.75	40.4	40.4	14	3
112.25	59.125	36.1	36.1	13	4
112.25	64.125	33.4	33.4	14	4

Pressure Limited to Negative 100psf.

8600 Non Impact Horizontal Sliding Window
Test # FTL 4457 - 3/16" Annealed Fin Frame (XOX)
w/ HEAVY DUTY MEETING RAIL & HI-RISE SILL

Width (in)	Height (in)	DP(+) psf	DP(-) psf	Anchors Head & Sill	Anchors Each Jamb
73.125	25.125	73.3	100.0	11	2
85.125	25.125	73.3	91.5	12	2
97.125	25.125	73.3	81.6	12	2
109.125	25.125	73.3	75.9	13	2
121.125	25.125	71.5	71.5	14	2
73.125	37.125	72.6	72.6	11	3
85.125	37.125	60.8	60.8	11	3
97.125	37.125	52.1	52.1	11	3
109.125	37.125	45.9	45.9	11	2
121.125	37.125	40.2	40.2	11	2
73.125	49.125	52.1	52.1	10	3
85.125	49.125	48.4	48.4	12	3
97.125	49.125	44.5	44.5	12	3
109.125	49.125	39.9	39.9	12	3
121.125	49.125	36.4	36.4	12	3
73.125	61.125	40.2	40.2	10	3
85.125	61.125	38.3	38.3	11	3
97.125	61.125	36.4	36.4	12	3
109.125	61.125	33.5	33.5	13	3
121.125	61.125	30.8	30.8	13	3
54.25	27.125	73.3	100.0	9	2
54.25	39.5	73.3	80.4	10	3
54.25	51.75	58.0	58.0	9	3
54.25	59.125	50.4	50.4	9	3
54.25	64.125	47.4	47.4	9	3
75.125	27.125	73.3	90.8	11	3
75.125	39.5	64.0	64.0	11	3
75.125	51.75	48.2	48.2	11	3
75.125	59.125	40.8	40.8	10	3
75.125	64.125	37.2	37.2	10	3
107.375	27.125	60.9	60.9	11	2
107.375	39.5	40.6	40.6	10	2
107.375	51.75	36.2	36.2	12	3
107.375	59.125	32.7	32.7	12	3
107.375	64.125	30.1	30.1	12	3
112.25	27.125	68.0	68.0	13	2
112.25	39.5	47.6	47.6	13	3
112.25	51.75	40.4	40.4	14	3
112.25	59.125	36.1	36.1	13	4
112.25	64.125	33.4	33.4	14	4

Pressure Limited to Negative 100psf.

8600 Non Impact Horizontal Sliding Window
Test # FTL 4594 - 3/16" Annealed Fin Frame (XOX)
w/ STANDARD MEETING RAIL & STANDARD SILL

Width (in)	Height (in)	DP(+) psf	DP(-) psf	Anchors Head & Sill	Anchors Each Jamb
73.125	25.125	56.7	100.0	11	2
85.125	25.125	56.7	91.5	12	2
97.125	25.125	56.7	81.6	12	2
109.125	25.125	56.7	75.9	13	2
121.125	25.125	56.7	71.5	14	2
73.125	37.125	56.7	72.6	11	3
85.125	37.125	56.7	60.8	11	3
97.125	37.125	52.1	52.1	11	3
109.125	37.125	45.9	45.9	11	2
121.125	37.125	40.2	40.2	11	2
73.125	49.125	52.1	52.1	10	3
85.125	49.125	48.4	48.4	12	3
97.125	49.125	44.5	44.5	12	3
109.125	49.125	39.9	39.9	12	3
121.125	49.125	36.4	36.4	12	3
54.25	27.125	56.7	100.0	9	2
54.25	39.5	56.7	80.4	10	3
54.25	51.75	56.7	58.0	9	3
75.125	27.125	56.7	90.8	11	3
75.125	39.5	56.7	64.0	11	3
75.125	51.75	48.2	48.2	11	3
107.375	27.125	56.7	60.9	11	2
107.375	39.5	40.6	40.6	10	2
107.375	51.75	36.2	36.2	12	3
112.25	27.125	56.7	68.0	13	2
112.25	39.5	47.6	47.6	13	3
112.25	51.75	40.4	40.4	14	3

Pressure Limited to Negative 100psf.

8600 Non Impact Horizontal Sliding Window
Test # FTL 4594 - 3/16" Annealed Fin Frame (XOX)
w/ STANDARD MEETING RAIL & HI-RISE SILL

Width (in)	Height (in)	DP(+) psf	DP(-) psf	Anchors Head & Sill	Anchors Each Jamb
73.125	25.125	73.3	100.0	11	2
85.125	25.125	73.3	91.5	12	2
97.125	25.125	73.3	81.6	12	2
109.125	25.125	73.3	75.9	13	2
121.125	25.125	71.5	71.5	14	2
73.125	37.125	72.6	72.6	11	3
85.125	37.125	60.8	60.8	11	3
97.125	37.125	52.1	52.1	11	3
109.125	37.125	45.9	45.9	11	2
121.125	37.125	40.2	40.2	11	2
73.125	49.125	52.1	52.1	10	3
85.125	49.125	48.4	48.4	12	3
97.125	49.125	44.5	44.5	12	3
109.125	49.125	39.9	39.9	12	3
121.125	49.125	36.4	36.4	12	3
54.25	27.125	73.3	100.0	9	2
54.25	39.5	73.3	80.4	10	3
54.25	51.75	58.0	58.0	9	3
75.125	27.125	73.3	90.8	11	3
75.125	39.5	64.0	64.0	11	3
75.125	51.75	48.2	48.2	11	3
107.375	27.125	60.9	60.9	11	2
107.375	39.5	40.6	40.6	10	2
107.375	51.75	36.2	36.2	12	3
112.25	27.125	68.0	68.0	13	2
112.25	39.5	47.6	47.6	13	3
112.25	51.75	40.4	40.4	14	3

Pressure Limited to Negative 100psf.

8600 Non Impact Horizontal Sliding Window
Test # FTL 4578 - 1/8" Annealed Fin Frame (XOX)
w/ STANDARD MEETING RAIL & STANDARD SILL

Width (in)	Height (in)	DP(+) psf	DP(-) psf	Anchors Head & Sill	Anchors Each Jamb
73.125	25.125	56.1	56.1	6	2
85.125	25.125	45.7	45.7	6	2
97.125	25.125	38.6	38.6	6	1
109.125	25.125	33.5	33.5	6	1
121.125	25.125	30.5	30.5	6	1
73.125	37.125	44.7	44.7	7	2
85.125	37.125	38.7	38.7	7	2
97.125	37.125	33.6	33.6	8	2
109.125	37.125	29.3	29.3	7	2
121.125	37.125	25.8	25.8	7	2
73.125	49.125	33.6	33.6	7	2
85.125	49.125	29.7	29.7	7	2
97.125	49.125	26.1	26.1	7	2
109.125	49.125	23.5	23.5	7	2
121.125	49.125	21.1	21.1	8	2
54.25	27.125	56.7	70.5	6	2
54.25	39.5	48.0	48.0	6	2
54.25	51.75	33.4	33.4	6	2
75.125	27.125	50.7	50.7	6	2
75.125	39.5	40.2	40.2	7	2
75.125	51.75	30.4	30.4	7	2
107.375	27.125	28.3	28.3	6	1
107.375	39.5	26.0	26.0	7	2
107.375	51.75	20.6	20.6	7	2
112.25	27.125	33.8	33.8	7	1
112.25	39.5	30.0	30.0	8	2
112.25	51.75	23.5	23.5	8	2

8600 Non Impact Horizontal Sliding Window
Test # FTL 4578 - 1/8" Annealed Fin Frame (XOX)
w/ STANDARD MEETING RAIL & HI-RISE SILL

Width (in)	Height (in)	DP(+) psf	DP(-) psf	Anchors Head & Sill	Anchors Each Jamb
73.125	25.125	56.1	56.1	6	2
85.125	25.125	45.7	45.7	6	2
97.125	25.125	38.6	38.6	6	1
109.125	25.125	33.5	33.5	6	1
121.125	25.125	30.5	30.5	6	1
73.125	37.125	44.7	44.7	7	2
85.125	37.125	38.7	38.7	7	2
97.125	37.125	33.6	33.6	8	2
109.125	37.125	29.3	29.3	7	2
121.125	37.125	25.8	25.8	7	2
73.125	49.125	33.6	33.6	7	2
85.125	49.125	29.7	29.7	7	2
97.125	49.125	26.1	26.1	7	2
109.125	49.125	23.5	23.5	7	2
121.125	49.125	21.1	21.1	8	2
54.25	27.125	70.5	70.5	6	2
54.25	39.5	48.0	48.0	6	2
54.25	51.75	33.4	33.4	6	2
75.125	27.125	50.7	50.7	6	2
75.125	39.5	40.2	40.2	7	2
75.125	51.75	30.4	30.4	7	2
107.375	27.125	28.3	28.3	6	1
107.375	39.5	26.0	26.0	7	2
107.375	51.75	20.6	20.6	7	2
112.25	27.125	33.8	33.8	7	1
112.25	39.5	30.0	30.0	8	2
112.25	51.75	23.5	23.5	8	2

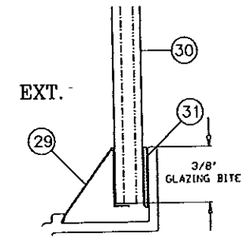

MONOLITHIC GLASS – SINGLE GLAZE
ANNEALED OR TEMPERED
1/8", 3/16" OR 1/4" THICK
(SEE DESIGN PRESSURE TABLES)

Note:

1. WINDOW WIDTHS & HEIGHTS ARE THE OVERALL FIN FRAME DIMENSIONS.

PRODUCT REVISED
as complying with the Florida
Building Code
Acceptance No 14-0908.15
Expiration Date 02/23/2016
By
Miami Dade Product Control

LAMSON INDUSTRIES, INC.
8501 N.W. 90 ST.
MEDLEY, FLORIDA 33166
PH No. (305) 696-8660

MANUFACTURER OF QUALITY ALUMINUM WINDOWS AND GLASS DOORS

HS-8600 HORIZONTAL ROLLING FIN WINDOW

GLASS LOAD CHARTS & MONOLITHIC GLAZING DETAIL (XOX)

Revision Notes:
A. Revised to Comply w/ 2010 FBC
B. Revised to Comply w/ 2014 FBC

Drawn By: N. ERAZO
Date Drawn: 05/02/05
Checked By: N. ERAZO
Date Revised: 08/11/14
Revision Level: B
Scale:

Drawing Number: L8600-0401
Sheet: 6 OF 8
Product Reference Number:
Revision #:

THOMAS J. SOTOS
PROFESSIONAL ENGINEER
FL LIC # 55225

DATE SEP 09 2014

8600 Non Impact Horizontal Sliding Window
Test # FTL 4541 - 1/8" Annealed Insulated Fin Frame (XOX)
w/ HEAVYDUTY MEETING RAIL & STANDARD SILL

Width (in)	Height (in)	DP(+) psf	DP(-) psf	Anchors Head & Sill	Anchors Each Jamb
73.125	25.125	56.7	100.0	11	2
85.125	25.125	56.7	82.3	11	2
97.125	25.125	56.7	69.4	11	2
109.125	25.125	56.7	60.3	11	2
121.125	25.125	54.8	54.8	11	2
73.125	37.125	56.7	80.5	13	3
85.125	37.125	56.7	69.6	13	3
97.125	37.125	56.7	60.5	13	3
109.125	37.125	52.8	52.8	13	3
121.125	37.125	46.5	46.5	12	3
73.125	49.125	56.7	60.4	12	3
85.125	49.125	53.4	53.4	13	3
97.125	49.125	47.0	47.0	13	3
109.125	49.125	42.2	42.2	13	3
121.125	49.125	38.0	38.0	13	3
73.125	61.125	46.4	46.4	12	3
85.125	61.125	43.2	43.2	13	4
97.125	61.125	38.0	38.0	13	4
109.125	61.125	34.2	34.2	13	4
121.125	61.125	30.9	30.9	13	3
54.25	27.125	56.7	100.0	9	2
54.25	39.5	56.7	86.4	10	3
54.25	51.75	56.7	60.1	10	3
54.25	59.125	48.8	48.8	9	3
54.25	64.125	43.7	43.7	9	3
75.125	27.125	56.7	91.2	11	3
75.125	39.5	56.7	72.3	12	3
75.125	51.75	54.7	54.7	12	3
75.125	59.125	47.1	47.1	12	3
75.125	64.125	43.4	43.4	12	3
107.375	27.125	50.9	50.9	9	2
107.375	39.5	46.8	46.8	12	3
107.375	51.75	37.1	37.1	12	3
107.375	59.125	32.9	32.9	12	3
107.375	64.125	30.2	30.2	12	3
112.25	27.125	56.7	60.9	11	2
112.25	39.5	53.9	53.9	14	3
112.25	51.75	42.3	42.3	14	4
112.25	59.125	36.9	36.9	14	4
112.25	64.125	34.5	34.5	14	4

Pressure Limited to Negative 100psf.

8600 Non Impact Horizontal Sliding Window
Test # FTL 4541 - 1/8" Annealed Insulated Fin Frame (XOX)
w/ HEAVYDUTY MEETING RAIL & HI-RISE SILL

Width (in)	Height (in)	DP(+) psf	DP(-) psf	Anchors Head & Sill	Anchors Each Jamb
73.125	25.125	73.3	100.0	11	2
85.125	25.125	73.3	82.3	11	2
97.125	25.125	69.4	69.4	11	2
109.125	25.125	60.3	60.3	11	2
121.125	25.125	54.8	54.8	11	2
73.125	37.125	73.3	80.5	13	3
85.125	37.125	69.6	69.6	13	3
97.125	37.125	60.5	60.5	13	3
109.125	37.125	52.8	52.8	13	3
121.125	37.125	46.5	46.5	12	3
73.125	49.125	60.4	60.4	12	3
85.125	49.125	53.4	53.4	13	3
97.125	49.125	47.0	47.0	13	3
109.125	49.125	42.2	42.2	13	3
121.125	49.125	38.0	38.0	13	3
73.125	61.125	46.4	46.4	12	3
85.125	61.125	43.2	43.2	13	4
97.125	61.125	38.0	38.0	13	4
109.125	61.125	34.2	34.2	13	4
121.125	61.125	30.9	30.9	13	3
54.25	27.125	73.3	100.0	9	2
54.25	39.5	73.3	86.4	10	3
54.25	51.75	60.1	60.1	10	3
54.25	59.125	48.8	48.8	9	3
54.25	64.125	43.7	43.7	9	3
75.125	27.125	73.3	91.2	11	3
75.125	39.5	72.3	72.3	12	3
75.125	51.75	54.7	54.7	12	3
75.125	59.125	47.1	47.1	12	3
75.125	64.125	43.4	43.4	12	3
107.375	27.125	50.9	50.9	9	2
107.375	39.5	46.8	46.8	12	3
107.375	51.75	37.1	37.1	12	3
107.375	59.125	32.9	32.9	12	3
107.375	64.125	30.2	30.2	12	3
112.25	27.125	60.9	60.9	11	2
112.25	39.5	53.9	53.9	14	3
112.25	51.75	42.3	42.3	14	4
112.25	59.125	36.9	36.9	14	4
112.25	64.125	34.5	34.5	14	4

Pressure Limited to Negative 100psf.

8600 Non Impact Horizontal Sliding Window - XO or OX
Test # FTL 4533 - 1/8" Annealed Insulated Fin Frame
w/ HEAVYDUTY MEETING RAIL & STANDARD SILL

Width (in)	Height (in)	DP(+) psf	DP(-) psf	Anchors Head & Sill	Anchors Each Jamb
25.125	25.125	56.7	100.0	3	2
37.125	25.125	56.7	100.0	5	3
49.125	25.125	56.7	100.0	7	3
61.125	25.125	56.7	100.0	9	3
73.125	25.125	56.7	96.5	10	3
25.125	37.125	56.7	100.0	4	3
37.125	37.125	56.7	100.0	6	4
49.125	37.125	56.7	98.9	9	5
61.125	37.125	56.7	89.5	10	5
73.125	37.125	56.7	77.9	11	4
25.125	49.125	56.7	100.0	5	4
37.125	49.125	56.7	100.0	8	6
49.125	49.125	56.7	67.8	7	5
61.125	49.125	56.7	64.5	9	5
73.125	49.125	56.7	59.1	10	5
25.125	61.125	56.7	100.0	6	5
37.125	61.125	56.7	91.2	9	6
49.125	61.125	51.7	51.7	7	5
61.125	61.125	46.3	46.3	8	5
73.125	61.125	46.0	46.0	10	5
27.625	27.125	56.7	100.0	4	3
27.625	39.5	56.7	100.0	5	4
27.625	51.75	56.7	100.0	6	5
27.625	59.125	56.7	100.0	7	5
27.625	64.125	56.7	100.0	7	6
38.125	27.125	56.7	100.0	5	3
38.125	39.5	56.7	100.0	7	4
38.125	51.75	56.7	92.0	8	6
38.125	59.125	56.7	86.9	8	6
38.125	64.125	56.7	84.3	9	6
54.25	27.125	56.7	100.0	8	3
54.25	39.5	56.7	88.2	9	5
54.25	51.75	56.7	60.4	8	5
54.25	59.125	49.4	49.4	7	5
54.25	64.125	44.4	44.4	7	5
75.125	27.125	56.7	90.9	11	3
75.125	39.5	56.7	72.2	11	4
75.125	51.75	54.6	54.6	10	5
75.125	59.125	47.1	47.1	10	5
75.125	64.125	43.3	43.3	10	5

Pressure Limited to Negative 100psf.

8600 Non Impact Horizontal Sliding Window - XO or OX
Test # FTL 4533 - 1/8" Annealed Insulated Fin Frame
w/ HEAVYDUTY MEETING RAIL & HI-RISE SILL

Width (in)	Height (in)	DP(+) psf	DP(-) psf	Anchors Head & Sill	Anchors Each Jamb
25.125	25.125	73.3	100.0	3	2
37.125	25.125	73.3	100.0	5	3
49.125	25.125	73.3	100.0	7	3
61.125	25.125	73.3	100.0	9	3
73.125	25.125	73.3	96.5	10	3
25.125	37.125	73.3	100.0	4	3
37.125	37.125	73.3	100.0	6	4
49.125	37.125	73.3	98.9	9	5
61.125	37.125	73.3	89.5	10	5
73.125	37.125	73.3	77.9	11	4
25.125	49.125	73.3	100.0	5	4
37.125	49.125	73.3	100.0	8	6
49.125	49.125	67.8	67.8	7	5
61.125	49.125	64.5	64.5	9	5
73.125	49.125	59.1	59.1	10	5
25.125	61.125	73.3	100.0	6	5
37.125	61.125	73.3	91.2	9	6
49.125	61.125	51.7	51.7	7	5
61.125	61.125	46.3	46.3	8	5
73.125	61.125	46.0	46.0	10	5
27.625	27.125	73.3	100.0	4	3
27.625	39.5	73.3	100.0	5	4
27.625	51.75	73.3	100.0	6	5
27.625	59.125	73.3	100.0	7	5
27.625	64.125	73.3	100.0	7	6
38.125	27.125	73.3	100.0	5	3
38.125	39.5	73.3	100.0	7	4
38.125	51.75	73.3	92.0	8	6
38.125	59.125	73.3	86.9	8	6
38.125	64.125	73.3	84.3	9	6
54.25	27.125	73.3	100.0	8	3
54.25	39.5	73.3	88.2	9	5
54.25	51.75	60.4	60.4	8	5
54.25	59.125	49.4	49.4	7	5
54.25	64.125	44.4	44.4	7	5
75.125	27.125	73.3	90.9	11	3
75.125	39.5	72.2	72.2	11	4
75.125	51.75	54.6	54.6	10	5
75.125	59.125	47.1	47.1	10	5
75.125	64.125	43.3	43.3	10	5

Pressure Limited to Negative 100psf.

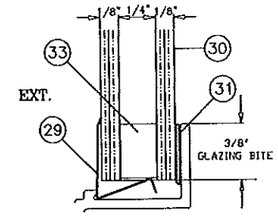

1/2" OVERALL INSULATED GLASS
CONSIST OF:
1/8" ANNEALED OR TEMPERED LITE
+ 1/4" AIR SPACE
+ 1/8" ANNEALED OR TEMPERED LITE
(SEE DESIGN PRESSURE TABLES)

Note:

1. WINDOW WIDTHS & HEIGHTS ARE THE OVERALL FIN FRAME DIMENSIONS.

8600 Non Impact Horizontal Sliding Window
Test # FTL 4588 - 1/8" Annealed Insulated Fin Frame (XOX)
w/ STANDARD MEETING RAIL & STANDARD SILL

Width (in)	Height (in)	DP(+) psf	DP(-) psf	Anchors Head & Sill	Anchors Each Jamb
73.125	25.125	56.7	100.0	11	2
85.125	25.125	56.7	82.3	11	2
97.125	25.125	56.7	69.4	11	2
109.125	25.125	56.7	60.3	11	2
121.125	25.125	54.8	54.8	11	2
73.125	37.125	56.7	80.5	13	3
85.125	37.125	56.7	69.6	13	3
97.125	37.125	56.7	60.5	13	3
109.125	37.125	52.8	52.8	13	3
121.125	37.125	46.5	46.5	12	3
73.125	49.125	56.7	57.0	12	3
85.125	49.125	52.9	52.9	13	3
97.125	49.125	47.0	47.0	13	3
109.125	49.125	42.2	42.2	13	3
121.125	49.125	38.0	38.0	13	3
54.25	27.125	56.7	100.0	9	2
54.25	39.5	56.7	86.4	10	3
54.25	51.75	56.7	60.1	10	3
75.125	27.125	56.7	91.2	11	3
75.125	39.5	56.7	72.3	12	3
75.125	51.75	52.1	52.1	12	3
107.375	27.125	50.9	50.9	9	2
107.375	39.5	46.8	46.8	12	3
107.375	51.75	37.1	37.1	12	3
112.25	27.125	56.7	60.9	11	2
112.25	39.5	53.9	53.9	14	3
112.25	51.75	42.3	42.3	14	4

Pressure Limited to Negative 100psf.

8600 Non Impact Horizontal Sliding Window
Test # FTL 4588 - 1/8" Annealed Insulated Fin Frame (XOX)
w/ STANDARD MEETING RAIL & HI-RISE SILL

Width (in)	Height (in)	DP(+) psf	DP(-) psf	Anchors Head & Sill	Anchors Each Jamb
73.125	25.125	73.3	100.0	11	2
85.125	25.125	73.3	82.3	11	2
97.125	25.125	69.4	69.4	11	2
109.125	25.125	60.3	60.3	11	2
121.125	25.125	54.8	54.8	11	2
73.125	37.125	73.3	80.5	13	3
85.125	37.125	69.6	69.6	13	3
97.125	37.125	60.5	60.5	13	3
109.125	37.125	52.8	52.8	13	3
121.125	37.125	46.5	46.5	12	3
73.125	49.125	57.0	57.0	12	3
85.125	49.125	52.9	52.9	13	3
97.125	49.125	47.0	47.0	13	3
109.125	49.125	42.2	42.2	13	3
121.125	49.125	38.0	38.0	13	3
54.25	27.125	73.3	100.0	9	2
54.25	39.5	73.3	86.4	10	3
54.25	51.75	60.1	60.1	10	3
75.125	27.125	73.3	91.2	11	3
75.125	39.5	72.3	72.3	12	3
75.125	51.75	52.1	52.1	12	3
107.375	27.125	50.9	50.9	9	2
107.375	39.5	46.8	46.8	12	3
107.375	51.75	37.1	37.1	12	3
112.25	27.125	60.9	60.9	11	2
112.25	39.5	53.9	53.9	14	3
112.25	51.75	42.3	42.3	14	4

Pressure Limited to Negative 100psf.

PRODUCT REVISED
as complying with the Florida
Building Code
Acceptance No. 14-0908.15
Expiration Date 02/23/2016
By
Miami Dade Product Control

LAWSON INDUSTRIES, INC.
8501 N.W. 90 ST.
MEDLEY, FLORIDA 33166
PH No. (305) 696-8660

MANUFACTURER OF QUALITY ALUMINUM WINDOWS AND GLASS DOORS

HS-8600 HORIZONTAL ROLLING FIN WINDOW
GLASS LOAD CHARTS & INSULATED GLAZING DETAIL

Revision #:
Product Reference Number:
Drawing Number: L8600-0401
Sheet: 7 OF 8

Revision Notes:
A. Revised to Comply w/ 2010 FBC
B. Revised to Comply w/ 2014 FBC

Drawn By: N. ERAZO
Date Drawn: 05/02/05
Checked By: N. ERAZO
Date Revised: 08/11/14
Revision Level: B
Scale:

THOMAS J. SOTOS
PROFESSIONAL ENGINEER
FL LIC. # 55225
STATE OF FLORIDA
SEP 17 2014

DATE

FRAME HEAD
L-7603

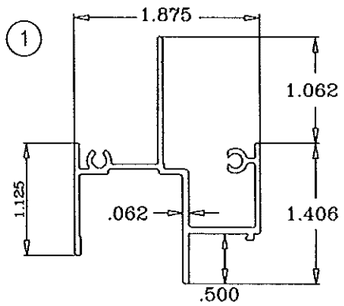

VENT INTERLOCK RAIL (Heavy Duty)
L-7506

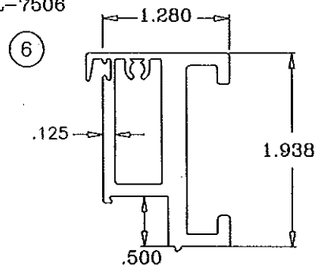

GLAZING BEAD
L-7516

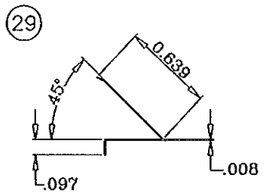

FIXED MEETING RAIL
L-7504

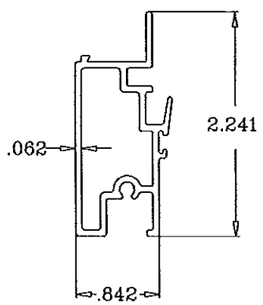

VENT INTERLOCK RAIL (Standard Duty)
L-7505

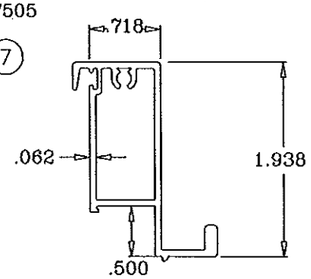

FRAME SILL RISER ADAPTER
L-8603

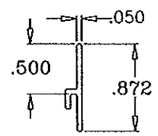

VENT JAMB RAIL
L-7507

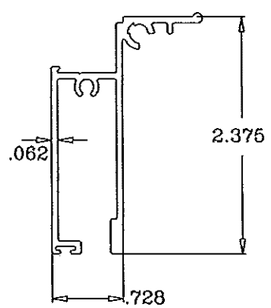

FRAME SILL
L-8601

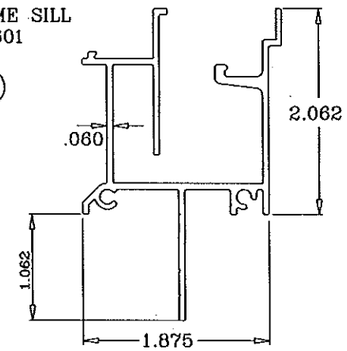

FRAME JAMB
L-8602

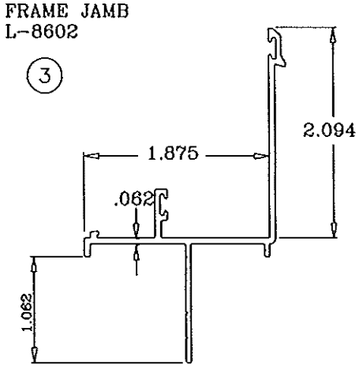

VENT TOP / BOTTOM RAIL
L-7508

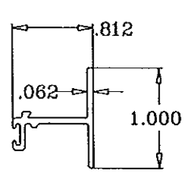

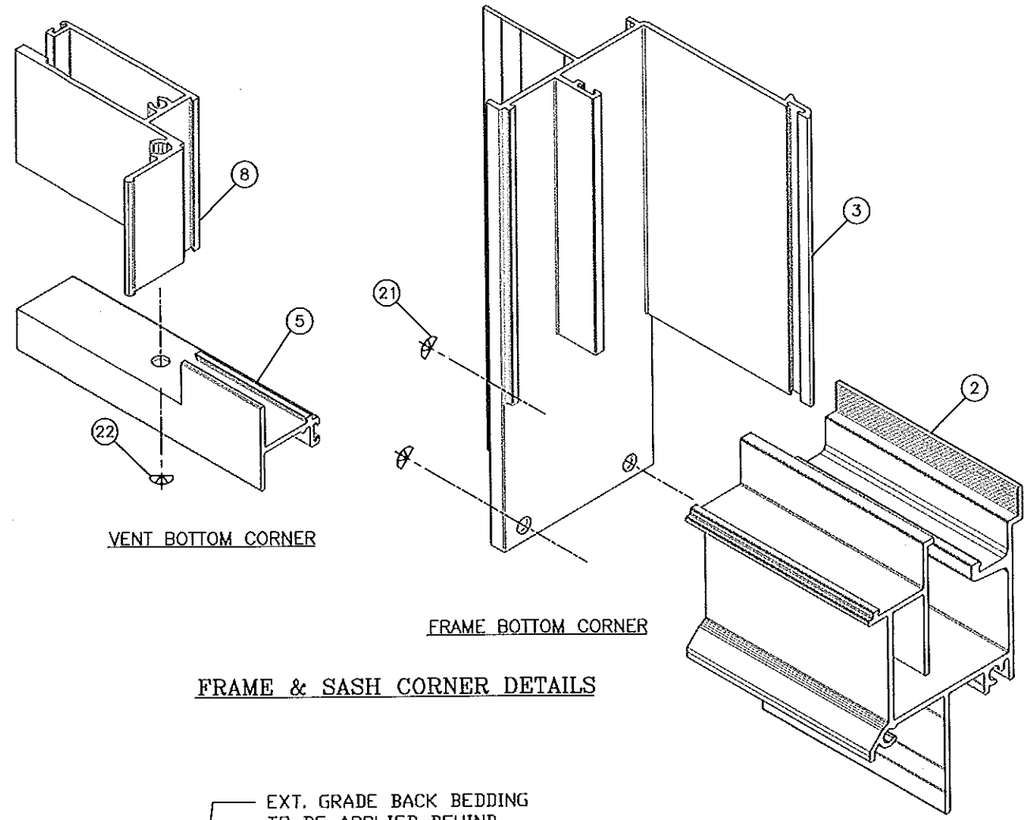

FRAME & SASH CORNER DETAILS

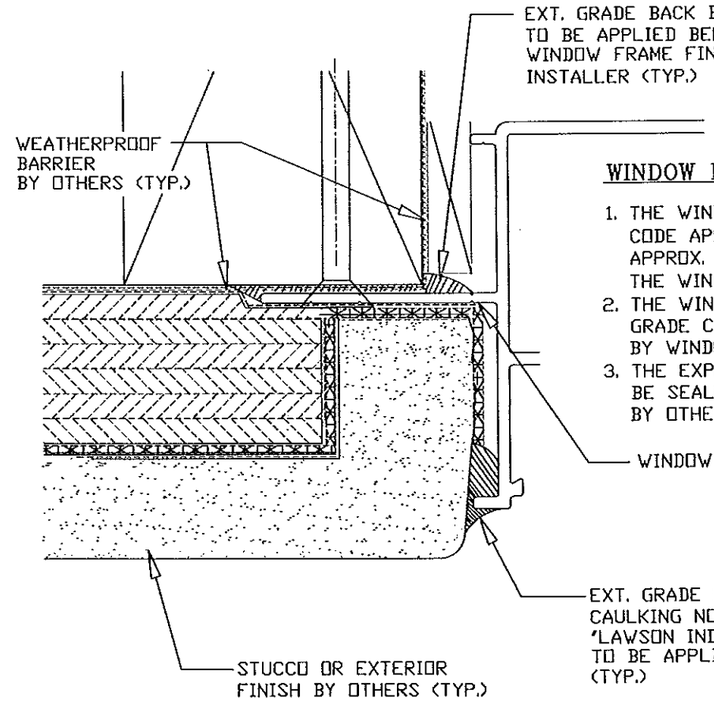

WINDOW INSTALLATION DETAIL

WINDOW INSTALLATION NOTES:

1. THE WINDOW OPENING MUST BE PROTECTED WITH A CODE APPROVED FELT OR MOISTURE/WEATHER BARRIER, APPROX. 12" WIDE THROUGHOUT ENTIRE PERIMETER OF THE WINDOW MOUNTING FIN. (NOT BY LAWSON INDUSTRIES)
2. THE WINDOW FRAME FIN TO BE BACK-BEDDED W/ AN EXT. GRADE CAULK THROUGHOUT THE ENTIRE PERIMETER OF FIN BY WINDOW INSTALLER (TYP.)
3. THE EXPOSED EXT. PERIMETER OF THE WINDOW FRAME TO BE SEALED W/ AN APPROVED EXTERIOR GRADE CAULK BY OTHERS (TYP.)

PRODUCT REVISED
as complying with the Florida
Building Code
Acceptance No 14-0908.15
Expiration Date 02/23/2016
By Miami Dade Product Control

LAWSON INDUSTRIES, INC.
8501 N.W. 90 ST.
MEDLEY, FLORIDA 33166
PH No. (305) 696-8660

MANUFACTURER OF QUALITY ALUMINUM WINDOWS AND GLASS DOORS

HS-8600 HORIZONTAL ROLLING FIN WINDOW
EXTRUSION DETAILS & CORNER ASSEMBLY DETAILS

Revision Notes:	A. Revised to Comply w/ 2010 FBC
	B. Revised to Comply w/ 2014 FBC
Drawn By:	N. ERAZO
Date Drawn:	05/02/05
Checked By:	N. ERAZO
Date Revised:	08/11/14
Revision Level:	B
Scale:	
Product Reference Number:	
Drawing Number:	L8600-0401
Sheet:	8 OF 8
Revision #:	

THOMAS J. SOTOS
PROFESSIONAL ENGINEER
FL LIC. # 55225

DATE SEP 10 2014