MIAMI-DADE COUNTY
DEPARTMENT OF REGULATORY AND ECONOMIC RESOURCES (RER)
BOARD AND CODE ADMINISTRATION DIVISION

MIAMI–DADE COUNTY
PRODUCT CONTROL SECTION
11805 SW 26 Street, Room 208
T (786) 315–2590 F (786) 315–2599
www.miamidade.gov/economy

NOTICE OF ACCEPTANCE (NOA)

Lawson Industries, Inc.
8501 NW 90 Street
Medley, FL 33166

SCOPE:

This NOA is being issued under the applicable rules and regulations governing the use of construction materials. The documentation submitted has been reviewed and accepted by Miami–Dade County RER–Product Control Section to be used in Miami Dade County and other areas where allowed by the Authority Having Jurisdiction (AHJ).

This NOA shall not be valid after the expiration date stated below. The Miami–Dade County Product Control Section (In Miami–Dade County) and/ or the AHJ (in areas other than Miami–Dade County) reserve the right to have this product or material tested for quality assurance purposes. If this product or material fails to perform in the accepted manner, the manufacturer will incur the expense of such testing and the AHJ may immediately revoke, modify, or suspend the use of such product or material within their jurisdiction. RER reserves the right to revoke this acceptance, if it is determined by Miami–Dade County Product Control Section that this product or material fails to meet the requirements of the applicable building code.

This product is approved as described herein, and has been designed to comply with the Florida Building Code, including the High Velocity Hurricane Zone.

DESCRIPTION: Series "HS–8500 (Flange–Frame)" Aluminum Horizontal Sliding Window – N. I.

APPROVAL DOCUMENT: Drawing No. **L8500–0401**, titled "HS–8500 Horizontal Rolling Flange Window", sheets 01 through 09 of 09, dated 05/02/05, with revision "**C**", dated 08/11/14, prepared by manufacturer, and signed and sealed by Thomas J. Sotos, P. E., bearing the Miami–Dade County Product Control Revision stamp with the Notice of Acceptance number and expiration date by the Miami–Dade County Product Control Section.

MISSILE IMPACT RATING: None.

LABELING: Each unit shall bear a permanent label with the manufacturer's name or logo, city, state, series, and following statement: "Miami–Dade County Product Control Approved", unless otherwise noted herein.

RENEWAL of this NOA shall be considered after a renewal application has been filed and there has been no change in the applicable building code negatively affecting the performance of this product.

TERMINATION of this NOA will occur after the expiration date or if there has been a revision or change in the materials, use, and/ or manufacture of the product or process. Misuse of this NOA as an endorsement of any product, for sales, advertising or any other purposes shall automatically terminate this NOA. Failure to comply with any section of this NOA shall be cause for termination and removal of NOA.

ADVERTISEMENT: The NOA number preceded by the words Miami–Dade County, Florida, and followed by the expiration date may be displayed in advertising literature. If any portion of the NOA is displayed, then it shall be done in its entirety.

INSPECTION: A copy of this entire NOA shall be provided to the user by the manufacturer or its distributors and shall be available for inspection at the job site at the request of the Building Official.

This NOA **revises NOA No. 12–0127.19** and consists of this page 1 and evidence pages E–1, E–2 and E–3, as well as approval document mentioned above.

The submitted documentation was reviewed by **Jaime D. Gascon, P. E.**

MIAMI-DADE COUNTY APPROVED

J. Gascon
12/1/14

Lawson Industries, Inc.

NOTICE OF ACCEPTANCE: EVIDENCE SUBMITTED

A. DRAWINGS

1. Manufacturer's die drawings and sections.
   (Submitted under previous NOA No. 09–0720.07)
2. Drawing No. **L8500–0401**, titled "HS–8500 Horizontal Rolling Flange Window", sheets 01 through 09 of 09, dated 05/02/05, with revision "**C**" dated 08/11/14, prepared by manufacturer, and signed and sealed by Thomas J. Sotos, P. E.

B. TESTS

1. Test reports on: 1) Uniform Static Air Pressure Test, Loading per FBC TAS 202–94
   along with marked–up drawings and installation diagram of aluminum horizontal sliding windows, prepared by Hurricane Engineering & Testing Laboratory, Inc., Test Reports No.'s **HETI–08–2158** and **HETI–08–2160**, dated 09/03/08, both signed and sealed by Candido F. Font, P. E.
   (Submitted under previous NOA No. 09–0720.07)
2. Test reports on: 1) Uniform Static Air Pressure Test, Loading per FBC TAS 202–94
   2) Forced Entry Test, per FBC 3603.2 (b), TAS 202–94
   along with marked–up drawings and installation diagram of aluminum horizontal sliding windows, prepared by Hurricane Engineering & Testing Laboratory, Inc., Test Report No. **HETI–08–2159**, dated 09/03/08, signed and sealed by Candido F. Font, P. E.
   (Submitted under previous NOA No. 09–0720.07)
3. Test reports on: 1) Air Infiltration Test, per FBC, TAS 202–94
   2) Uniform Static Air Pressure Test, Loading per FBC TAS 202–94
   3) Water Resistance Test, per FBC, TAS 202–94
   4) Forced Entry Test, per FBC 3603.2 (b), TAS 202–94
   along with marked–up drawings and installation diagram of an aluminum horizontal sliding window, prepared by Fenestration Testing Laboratory, Inc., Test Reports No.'s **FTL–4541**, dated 06/24/05, **FTL–4429**, dated 06/24/05 and **FTL–4413**, dated 06/23/05, all signed and sealed by Edmundo J. Largaespada, P. E.
   (Submitted under previous NOA No. 05–0919.05)
4. Test reports on: 1) Uniform Static Air Pressure Test, Loading per FBC TAS 202–94
   2) Water Resistance Test, per FBC, TAS 202–94
   along with marked–up drawings and installation diagram of aluminum horizontal sliding windows, prepared by Fenestration Testing Laboratory, Inc., Test Report No. **FTL–4533**, dated 06/22/05, signed and sealed by Edmundo J. Largaespada, P. E.
   (Submitted under previous NOA No. 05–0919.05)

Jaime D. Gascon, P. E.
Product Control Section Supervisor
NOA No. 14–0908.16
Expiration Date: January 26, 2016
Approval Date: November 13, 2014

NOTICE OF ACCEPTANCE: EVIDENCE SUBMITTED

B. TESTS (CONTINUED)

5. Test reports on: 1) Uniform Static Air Pressure Test, Loading per FBC TAS 202–94 along with marked–up drawings and installation diagram of aluminum horizontal sliding windows, prepared by Fenestration Testing Laboratory, Inc., Test Reports No.'s **FTL–4578,** dated 06/24/05, **FTL–4547**, dated 06/23/05, **FTL–4588**, dated 06/24/05, **FTL–4594**, dated 06/24/05 and **FTL–4457**, dated 06/24/05, all signed and sealed by Edmundo J. Largaespada, P. E.
   (Submitted under previous NOA No. 05–0919.05)

C. CALCULATIONS

1. Anchor verification calculations and structural analysis, complying with FBC, prepared by Lawson Industries, Inc., dated 08/17/05 and 07/16–17/09, both signed and sealed by Thomas J. Sotos, P. E.
   (Submitted under previous NOA No. 10–1025.04)
2. **Glazing complies with ASTM E1300–04/ 09**

D. QUALITY ASSURANCE

1. Miami–Dade Department of Regulatory and Economic Resources (RER)

E. MATERIAL CERTIFICATIONS

1. None.

F. STATEMENTS

1. Statement letter of conformance to and complying with **FBC 5th Edition (2014)**, issued by manufacturer, dated 09/02/14, signed and sealed by Thomas J. Sotos, P. E.
2. Department of State Certification of **LAWSON INDUSTRIES, INC.** as a for profit corporation, active and organized under the laws of the State of Florida, dated 04/11/14 and filed at the Secretary of State.
3. Statement letter of conformance, complying with **FBC–2010**, dated 01/25/12, signed and sealed by Thomas J. Sotos, P. E.
   (Submitted under previous NOA No.12–0127.19)
4. Statement letter of no financial interest, dated 08/15/05, signed and sealed by Thomas J. Sotos, P. E.
   (Submitted under previous NOA No. 05–0919.04)
5. Laboratory compliance letter for Test Reports No.'s **HETI–08–2159, HETI–08–2158** and **HETI–08–2160**, dated 09/03/08, all issued by Hurricane Engineering & Testing Laboratory, Inc., signed and sealed by Candido F. Font, P. E.
   (Submitted under previous NOA No. 09–0720.07)

Jaime D. Gascon, P.E.
Product Control Section Supervisor
NOA No. 14–0908.16
Expiration Date: January 26, 2016
Approval Date: November 13, 2014

NOTICE OF ACCEPTANCE: EVIDENCE SUBMITTED

D. TESTS (CONTINUED)

6. Laboratory compliance letter for Test Reports No.'s **FTL–4533**, dated 06/22/05, **FTL–4541**, dated 06/24/05, **FTL–4429**, dated 06/24/05, **FTL–4413**, dated 06/23/05, **FTL–4578**, dated 06/24/05, **FTL–4456**, dated 06/23/05, **FTL–4553**, dated 06/22/05, **FTL–4547**, dated 06/23/05, **FTL–4588**, dated 06/24/05, **FTL–4594**, dated 06/24/05 and **FTL–4457**, dated 06/24/05, all issued by Fenestration Testing Laboratory, Inc., signed and sealed by Edmundo J. Largaespada, P. E.
(Submitted under previous NOA No. 05–0919.04)

G. OTHERS

1. Notice of Acceptance No. **12–0127.19**, issued to Lawson Industries, Inc. for their Series "HS–8500 (Flange–Frame) Aluminum Horizontal Sliding Window – N. I.", approved on 02/03/11 and expiring on 01/26/16.

Jaime D. Gascon, P. E.
Product Control Section Supervisor
NOA No. 14–0908.16
Expiration Date: January 26, 2016
Approval Date: November 13, 2014

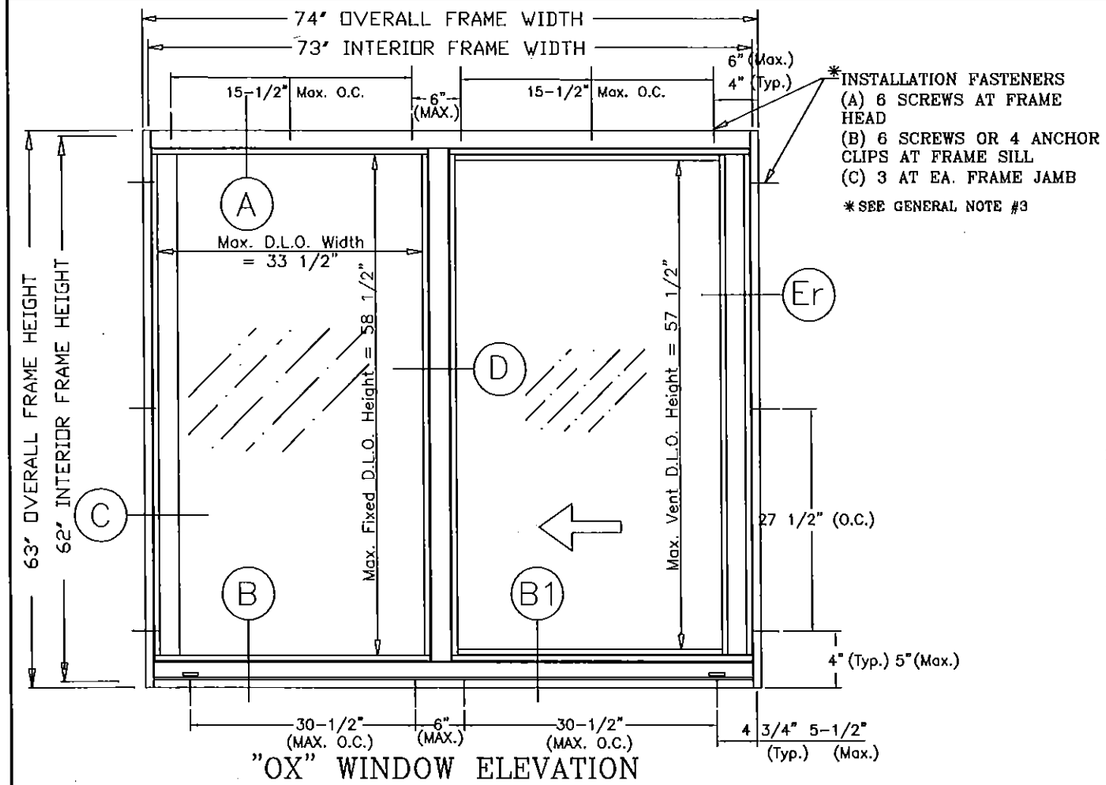

"OX" WINDOW ELEVATION

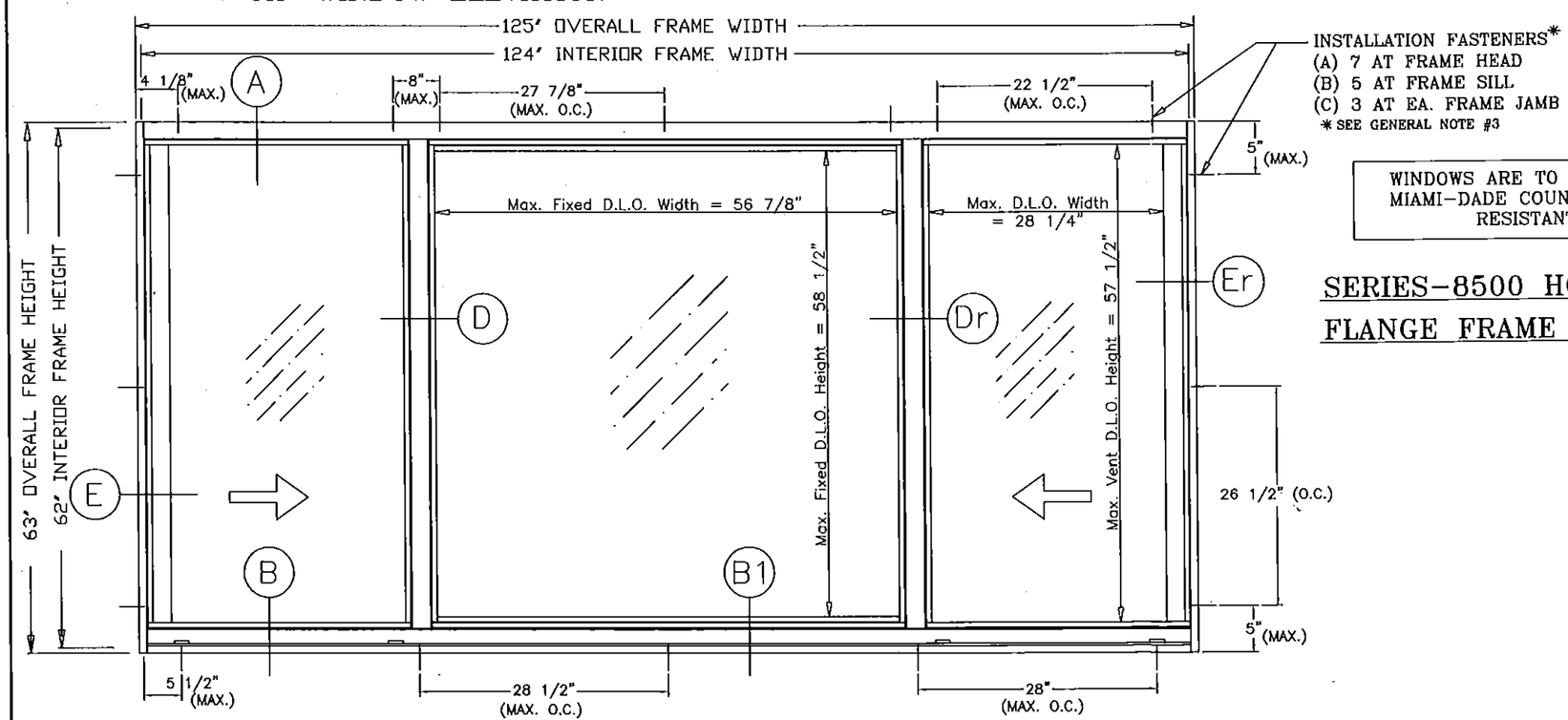

"XOX" WINDOW ELEVATION

WINDOWS ARE TO BE PROTECTED WITH MIAMI-DADE COUNTY APPROVED IMPACT RESISTANT SHUTTERS

General Notes:

1.) THIS WINDOW SYSTEM IS DESIGNED AND TESTED TO COMPLY WITH THE REQUIREMENTS OF THE 2014 FLORIDA BUILDING CODE AND ASTM 1300-02. THIS PRODUCT IS NOT IMPACT RESISTANT AND WINDOWS ARE TO BE PROTECTED WITH A MIAMI-DADE COUNTY APPROVED IMPACT RESISTANT SHUTTER.
2.) 1 X OR 2 X WOOD BUCKS SHALL BE INSTALLED AND ANCHORED SO THAT THE BUILDING RESISTS THE SUPERIMPOSED LOADS IN ACCORDANCE WITH THE REQUIREMENTS OF 2014 & TO BE REVIEWED BY BUILDING OFFICIAL.
3.) ANCHORS SHOWN ABOVE ARE AS PER TEST UNITS. ON CENTER (O.C.). ANCHOR SPACINGS WILL VARY WITH UNIT DIMENSIONS, AND THE NUMBER OF ANCHORS REQUIRED, AS SPECIFIED ON THE LOAD TABLES.
4.) ANCHOR CONDITIONS NOT DESCRIBED IN THESE DRAWING'S ARE TO BE ENGINEERED ON A SITE SPECIFIC BASIS, UNDER SEPARATE APPROVAL AND TO BE REVIEWED BY BUILDING OFFICIAL.
5.) FRAME INSTALLATION SHIMS IF USED; SHALL BE LOAD BEARING.
6.) XO or OX WINDOWS ARE QUALIFIED FOR USE WITH SINGLE GLAZE GLASS TYPES TABULATED HEREIN (SEE SHEET # 5 & 6).
7.) XOX WINDOWS ARE QUALIFIED FOR USE WITH SINGLE GLAZE GLASS TYPES TABULATED HEREIN (SEE SHEET #7).
8.) XO, OX, XOX WINDOWS ARE QUALIFIED FOR USE WITH DOUBLE GLAZE GLASS TYPES TABULATED HEREIN (SEE SHEET #8).
9.) SEE SHEET 4 FOR LOCK DETAILS & OPTIONS.
10.) SEE SHEET 4 FOR GLAZING DETAILS & OPTIONS (REFER TO SHEETS 5, 6, 7 & 8 FOR DESIGN PRESSURES).
11.) TEMPERED GLASS MAY BE USED, BUT DESIGN PRESSURES ARE LIMITED TO LOAD TABLES ON SHEET # 6 FOR XO UNITS AND SHEETS # 7 & 8 FOR XOX UNITS.
12.) FRAME SILL ANCHOR CLIPS TO BE MEASURED FROM THE INSIDE EDGE OF THE WINDOW FRAME AND TO BE LOCATED WITHIN A +/- 1/4" TOLERANCE. ANCHORS REQUIRED AT FRAME SILL TO BE THE SAME AS FRAME HEAD.
13.) SEE SHEET #6 FOR FLANGE PERIMETER CAULK/ INSTALLATION DETAIL.
14.) APPROVAL APPLIES TO SINGLE UNITS OR MULTIPLE UNITS AND MAY BE MULLED VERTICALLY OR HORIZONTALLY.
15.) MULLING SINGLE HUNG WINDOWS WITH OTHER TYPES OF MIAMI-DADE COUNTY APPROVED WINDOWS USING A MIAMI-DADE COUNTY APPROVED MULLION IN BETWEEN ARE ACCEPTABLE BUT THE LOWER DESIGN PRESSURE FROM THE WINDOWS OR MULLION APPROVAL WILL APPLY TO THE ENTIRE MULLED SYSTEM.
16.) SEE SHEET # 9 FOR MULLION/METAL ATTACHMENT DETAILS & NOTES.

SERIES-8500 HORIZONTAL SLIDING WINDOW FLANGE FRAME - (NON-IMPACT)

PRODUCT REVISED
as complying with the Florida
Building Code
Acceptance No 14-0908.16
Expiration Date 01/26/2016
By
Miami Dade Product Control

LAWSON INDUSTRIES, INC.
8501 N.W. 90 ST.
MEDLEY, FLORIDA 33166
PH No. (305) 696-8660
MANUFACTURER OF QUALITY ALUMINUM WINDOWS AND GLASS DOORS

HS-8500 HORIZONTAL ROLLING FLANGE WINDOW
APPROVED ELEVATIONS, CONFIGURATIONS AND NOTES

Product Reference Number:	Drawing Number: L8500-0401
Sheet: 1 OF 9	Revision #:
Revision Notes: Rev. A - Add 1/8" temp glass to XO configuration, sill anchor option & poly cam lock option.	
B. Revised to Comply w/ 2010 FBC	
C. Revised to Comply w/ 2014 FBC	
Drawn By: N. ERAZO	Date Drawn: 05/02/05
Checked By: N. ERAZO	Date Revised: 08/11/14
Revision Level: C	Scale:

THOMAS J. SOTOS
PROFESSIONAL ENGINEER
STATE OF FLORIDA
LICENSE No. 55225
DATE SEP 2 2014

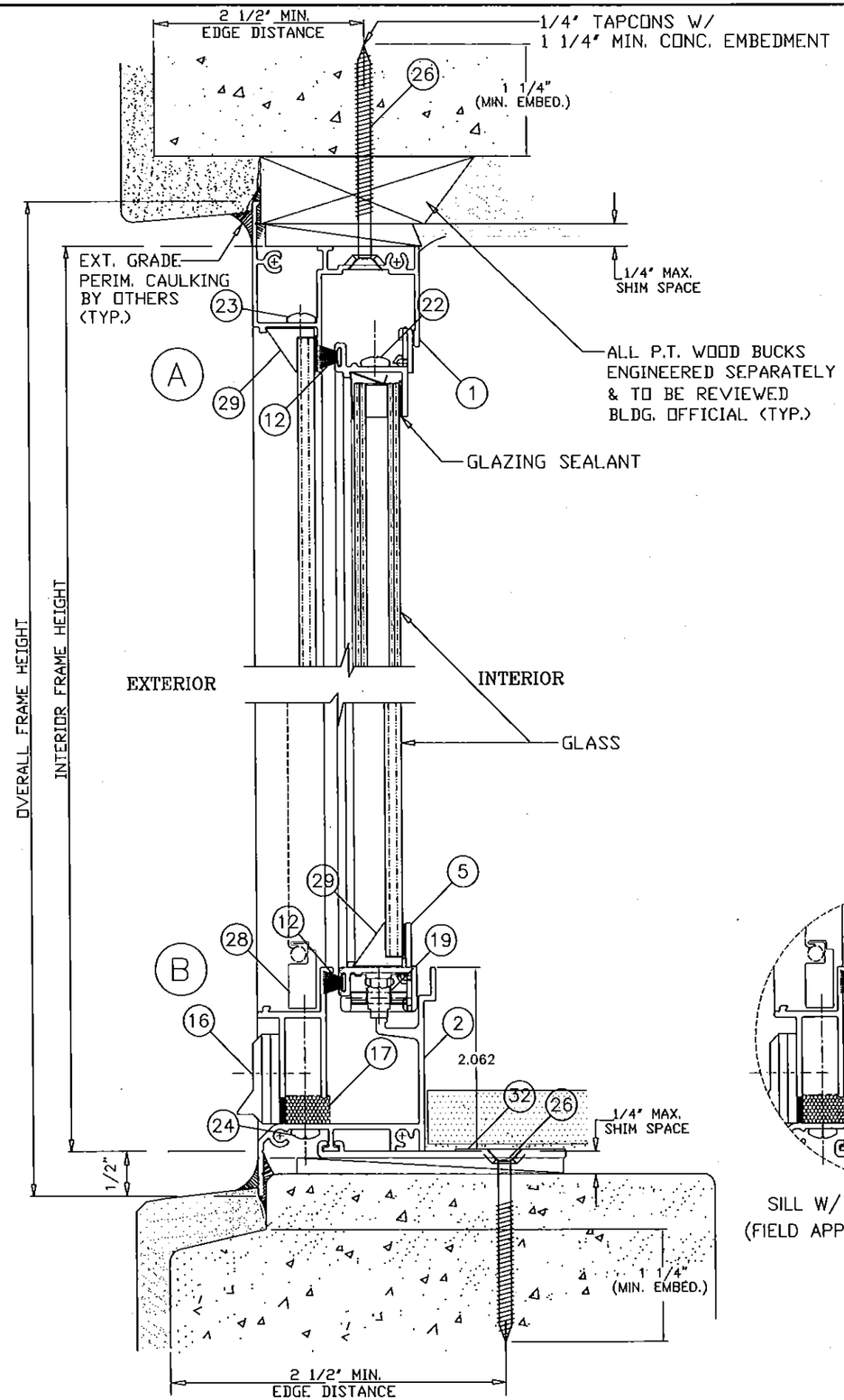

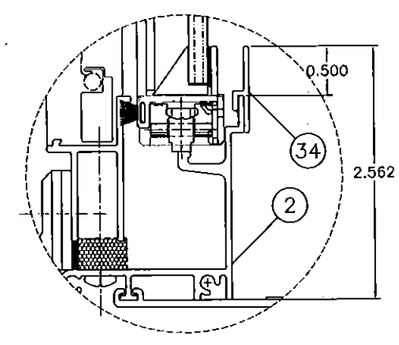

SILL W/ 1/2" RISER ADAPTER
(FIELD APPLIED W/ CLEAR SILICONE)

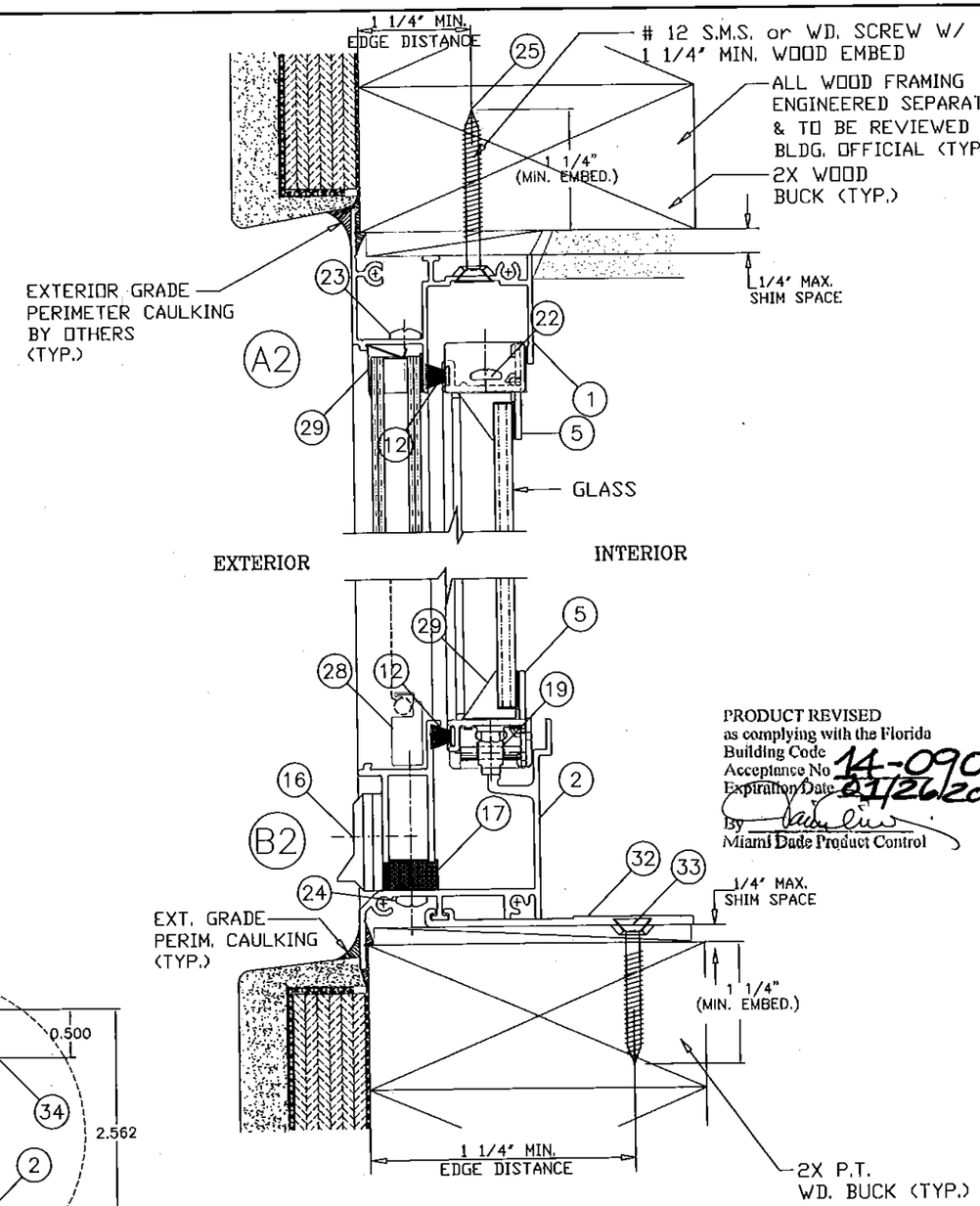

PRODUCT REVISED
as complying with the Florida
Building Code
Acceptance No 14-0908.16
Expiration Date 01/26/2016
By
Miami Dade Product Control

ANCHORS NOTE:

ANCHORS TO BE #12 SMS OR WD. SCREWS INTO WOOD, OR 1/4" TAPCONS or APPROVED CONC. FASTENERS INTO CONC., WITH A MINIMUM OF 1 1/4" PENETRATION INTO WOOD OR CONC. (REFER TO LOAD TABLES FOR QUANTITIES REQUIRED)

* WHEN THE GAP BETWEEN THE WINDOW FRAME AND THE BUCK OR MASONRY IS LESS THAN 1/8", SHIMS ARE NOT REQUIRED.

LAWSON INDUSTRIES, INC.
8501 N.W. 90 ST.
MEDLEY, FLORIDA 33166
PH No. (305) 696-8660
MANUFACTURER OF QUALITY ALUMINUM WINDOWS AND GLASS DOORS

HS-8500 HORIZONTAL ROLLING FLANGE WINDOW
WINDOW VERTICAL CROSS SECTION & DETAILS

Revision #:
Sheet: 2 OF 9
Drawing Number: L8500-0401
Product Reference Number:

Revision Notes:
Rev. A – Add 1/8" temp glass to XO configuration, sill anchor option & poly cam lock option.
B. Revised to Comply w/ 2010 FBC
C. Revised to Comply w/ 2014 FBC

Drawn By: N. ERAZO — Date Drawn: 05/02/05
Checked By: N. ERAZO — Date Revised: 08/11/14
Revision Level: C — Scale:

THOMAS J. SOPKO
PROFESSIONAL ENGINEER
LIC. # 55225
STATE OF FLORIDA
DATE: 9-4-2014

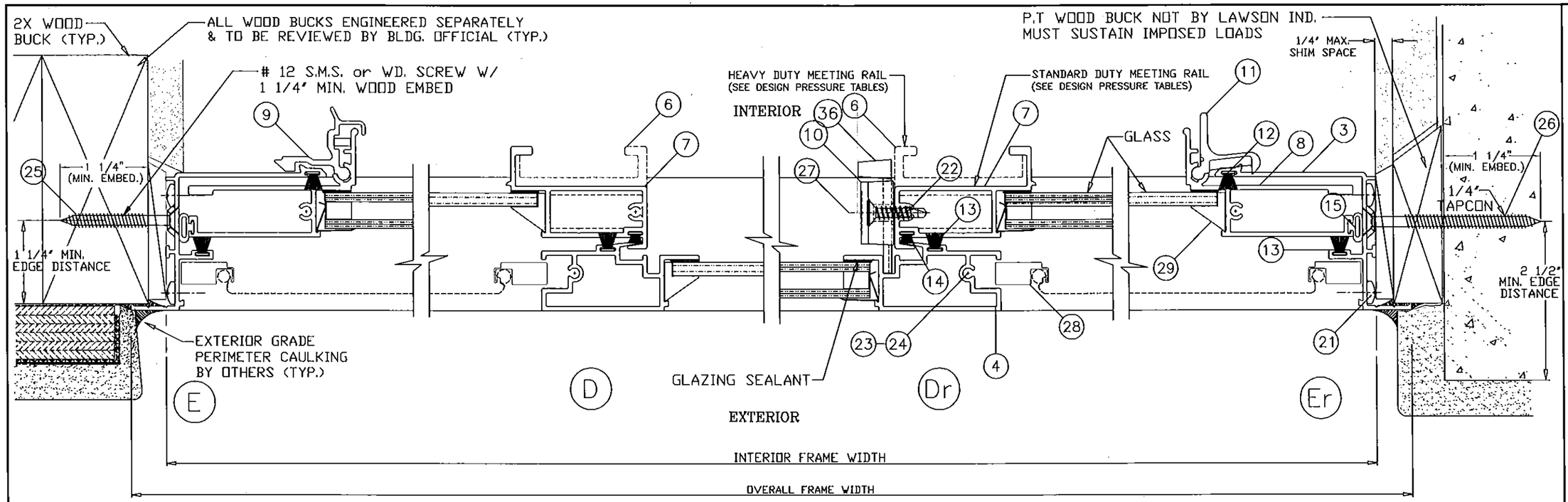

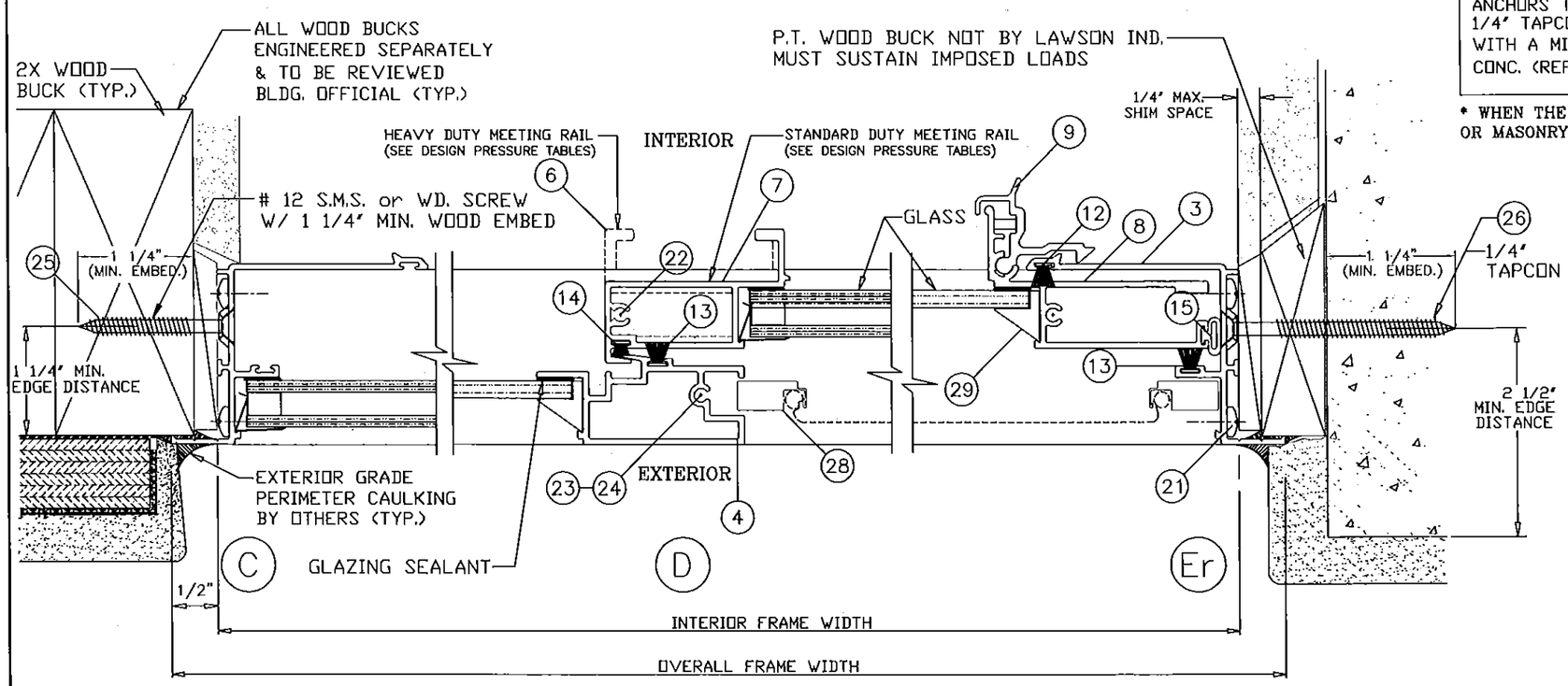

ANCHORS NOTE:

ANCHORS TO BE #12 SMS OR WD. SCREWS INTO WOOD, OR 1/4' TAPCONS or APPROVED CONC. FASTENERS INTO CONC., WITH A MINIMUM OF 1 1/4' PENETRATION INTO WOOD OR CONC. (REFER TO LOAD TABLES FOR QUANTITIES REQUIRED)

* WHEN THE GAP BETWEEN THE WINDOW FRAME AND THE BUCK OR MASONRY IS LESS THAN 1/8", SHIMS ARE NOT REQUIRED.

PRODUCT REVISED
as complying with the Florida Building Code
Acceptance No 14-0908.16
Expiration Date 01/26/2016
By
Miami Dade Product Control

LAWSON INDUSTRIES, INC.
8501 N.W. 90 ST.
MEDLEY, FLORIDA 33166
PH No. (305) 696-8660

MANUFACTURER OF QUALITY ALUMINUM WINDOWS AND GLASS DOORS

HS-8500 HORIZONTAL ROLLING FLANGE WINDOW

HORIZONTAL CROSS SECTIONAL DETAILS FOR STD/HVY DUTY MEETING RAIL

Product Reference Number:	Drawing Number: L8500-0401
Sheet: 3 OF 9	Revision #:
Date Drawn: 05/02/05	Date Revised: 08/11/14
Scale:	Revision Level: C
Drawn By: N. ERAZO	Checked By: N. ERAZO

Revision Notes:
Rev. A – Add 1/8" temp glass to XO configuration, sill anchor option & poly cam lock option.
B. Revised to Comply w/ 2010 FBC
C. Revised to Comply w/ 2014 FBC

THOMAS J. SOTOS
PROFESSIONAL ENGINEER
LICENSE No 55225
STATE OF FLORIDA
DATE

HS8500 FLANGE WINDOW – BILL OF MATERIALS

ITEM #	PART #	DRWG. #	REQD.	DESCRIPTION	REMARKS
1	L-7503	LII-127	1	FRAME HEAD	6063-T6 ALUMINUM
2	L-8501	LII-135	1	FRAME SILL	6063-T5 ALUMINUM
3	L-8502	LII-131	2	FRAME JAMB	6063-T6 ALUMINUM
4	L-7504	LII-129	2 x frame	FIXED MEETING RAIL	6005-T6 ALUMINUM
5	L-7508	LII-124	2 x vent	VENT TOP / BOTTOM RAIL	6063-T5 ALUMINUM
6	L-7506	LII-126	1 x vent	VENT INTERLOCK RAIL-H.D.	6005-T6 ALUMINUM
7	L-7505	LII-125	1 x vent	VENT INTERLOCK STD. DUTY	6005-T5 ALUMINUM
8	L-7507	LII-136	1 x vent	VENT LATCH JAMB	6005-T6 ALUMINUM
9	*	LII-012	2 x vent	VENT EXTRUDED LOCK	6063-T5 ALUMINUM
10	*	*	*	VENT CAM LOCK	DIE-CAST CAM LOCK
11	*	*	2 x vent	VENT PLASTIC LOCK	SPRING LOADED
12	*	SCHLEGEL	AS REQD.	Top/Bott. Rail Weatherstrip	.187" X .280" FIN SEAL
13	*	ULTRAFAB	AS REQD.	FXD. RAIL WEATHERSTRIP	.187" X 250" FIN SEAL
14	*	ULTRAFAB	AS REQD.	VENT LOCK WEATHERSTRIP	.187" X 150" PILE
15	*	*	AS REQ'D.	VENT JAMB WEATHERSTRIP	3/8" DIA. BULB
16	*	*	2	WEEP HOLE COVER W/ FLAP	1 1/2" wide x 1/4" hl weep
17	*	*	2	SILL OPEN CELL FOAM PAD	1/2"x3/8"x 1 3/4" LONG
18	*	*	2	SILL/JAMB JOINT GASKET	1/16" CLOSED CELL FOAM
19	L-763	HC-032	2	VENT ROLLER ASSEMBLY	2 X VENT BOTTOM RAIL
20	L-7524	*	6	VENT FACE GUIDE	3 PER VENT HOR. RAIL
21	*	*	8	FRAME ASSEMBLY SCREWS	# 8 X 5/8" P.H. PHIL.
22	*	*	4 x vent	VENT ASSEMBLY SCREWS	# 8 X 1" P.H. PHILLIPS
23	*	*	1 X RAIL	MTG. RAIL SCREW @ HEAD	# 8 X 1" P.H. PHILLIPS
24	*	*	1 X RAIL	MTG. RAIL SCREW @ SILL	# 8 X 2" P.H. PHILLIPS
25	*	*	SEE CHART	FRAME INSTALL'N SCREW	#12 X 1 1/2" F.H.-PHI.-S.M.S
26	*	*	SEE CHART	FRAME INSTALL'N SCREW	1/4" X 1 3/4" F.H.-TAPCON
27	*	*	2 X LOCK	CAM LOCK ATTCH'NT SCREW	#8 X 7/8" F.H. / PHI.
28	*	*	1 x vent	INSECT SCREEN	*
29	L-7515/16	*	AS REQD.	GLAZING BEAD	ROLL FORMED ALUMINUM
30	*	*	AS REQ'D.	GLASS	See Detail @ sheet 4 of 8
31	*	*	AS REQ'D	GLAZING SILICONE	See Detail @ sheet 4 of 8
32	L-5108	LII-111	1x anchor	SILL ANCHOR CLIP- 2"Long	6063-T6 ALUMINUM
33	*	*	5	FRAME SILL INST'N SCREW	#12 X 1 3/4" F.H. / PHI.
34	L-8503	LII-132	1	FRAME SILL 1/2" RISER	6063-T6 ALUMINUM
35	*	774-25B-767	AS REQ'D	'TruSeal' Swiggle Seal	Black -1/4" air space
36	HC-058-1		2	VENT SWEEP LATCH	MOLDED NYLON

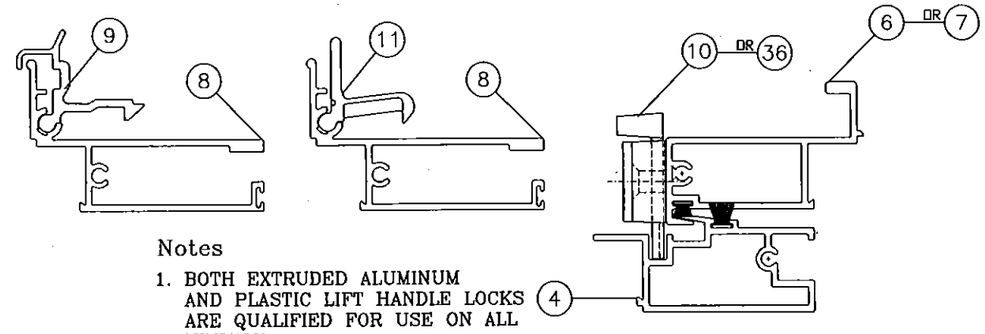

Notes

1. BOTH EXTRUDED ALUMINUM AND PLASTIC LIFT HANDLE LOCKS ARE QUALIFIED FOR USE ON ALL WINDOWS.
2. BOTH DIE CAST METAL AND MOLDED PLASTIC CAM LOCKS ARE QUALIFIED FOR USE ON ALL WINDOWS
3. TWO (2) LOCKS ARE REQUIRED PER EACH VENT.

LOCK (LATCH AND SWEEP) OPTIONS

Glazing Detail & Description

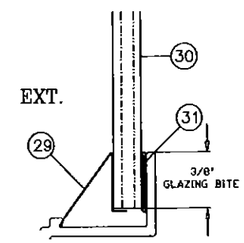

MONOLITHIC GLASS -- SINGLE GLAZE
ANNEALED OR TEMPERED
1/8", 3/16" OR 1/4" THICK
(SEE DESIGN PRESSURE TABLES)

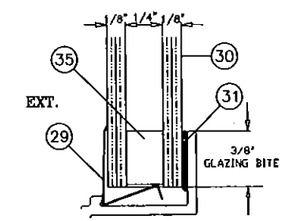

1/2" OVERALL INSULATED GLASS
CONSIST OF:
1/8" ANNEALED OR TEMPERED LITE
+ 1/4" AIR SPACE
+ 1/8" ANNEALED OR TEMPERED LITE
(SEE DESIGN PRESSURE TABLES)

(31) **Glazing Sealant Types & Options**

1) Schnee-Morehead 5731
2) Schnee-Morehead 5732
3) GE SCS 1000 Clear Silcone
4) Dow Corning Clear Silcone

PRODUCT REVISED
as complying with the Florida
Building Code
Acceptance No 14-0908.16
Expiration Date 01/26/2016
By
Miami Dade Product Control

LAMSON INDUSTRIES, INC.
8501 N.W. 90 ST.
MEDLEY, FLORIDA 33166
PH No. (305) 696-8660
MANUFACTURER OF QUALITY ALUMINUM WINDOWS AND GLASS DOORS

HS-8500 HORIZONTAL ROLLING FLANGE WINDOW
BILL OF MATERIALS, GLAZING DETAILS & LOCK OPTIONS

Revision Notes:
Rev. A – Add 1/8" temp glass to XO configuration, sill anchor option & poly cam lock option.
B. Revised to Comply w/ 2010 FBC
C. Revised to Comply w/ 2014 FBC

Drawn By: N. ERAZO | Date Drawn: 05/02/05
Checked By: N. ERAZO | Date Revised: 08/11/14
Revision Level: C | Scale:

Product Reference Number: L8500-0401 | Drawing Number: | Sheet: 4 OF 9 | Revision #:

THOMAS J. SOTOS
PROFESSIONAL ENGINEER
FL REG. No. 55225
STATE OF FLORIDA
DATE SEPT 2, 2014

8500 Non Impact Horizontal Sliding Window
Test # FTL 4413 - 1/4" Annealed Flange Frame (XO or OX)
w/ HEAVY DUTY MEETING RAIL & STANDARD SILL

Width (in)	Height (in)	DP(+) psf	DP(-) psf	Anchors Head & Sill	Anchors Each Jamb
26.5	26	60.0	100.0	2	2
37	26	60.0	100.0	2	2
53.125	26	60.0	100.0	3	2
74	26	60.0	100.0	5	2
26.5	38.375	60.0	100.0	2	2
37	38.375	60.0	100.0	3	2
53.125	38.375	60.0	100.0	4	2
74	39.375	60.0	100.0	6	2
26.5	50.625	60.0	100.0	2	2
37	50.625	60.0	100.0	3	2
53.125	50.625	60.0	89.6	4	3
74	50.625	60.0	74.8	5	3
26.5	58	60.0	100.0	3	2
37	58	60.0	98.6	4	3
53.125	58	60.0	74.9	4	3
74	58	60.0	60.8	5	3
26.5	63	60.0	100.0	3	2
37	63	60.0	89.4	3	3
53.125	63	60.0	67.3	4	3
74	63	54.0	54.0	5	3
24	24	60.0	100.0	2	2
36	24	60.0	100.0	2	2
48	24	60.0	100.0	3	2
60	24	60.0	100.0	3	2
72	24	60.0	100.0	4	2
24	36	60.0	100.0	2	2
36	36	60.0	100.0	3	2
48	36	60.0	100.0	3	2
60	36	60.0	100.0	4	2
72	36	60.0	100.0	5	2
24	48	60.0	100.0	2	2
36	48	60.0	100.0	3	2
48	48	60.0	100.0	4	3
60	48	60.0	89.8	5	3
72	48	60.0	82.3	5	3
24	60	60.0	100.0	2	2
36	60	60	96.9	4	3
48	60	60	77.2	4	3
60	60	60	65.9	4	3
72	60	58.8	58.8	5	3

Pressure Limited to Negative 100psf.

8500 Non Impact Horizontal Sliding Window
Test # FTL 4413 - 1/4" Annealed Flange Frame (XO or OX)
w/ HEAVY DUTY MEETING RAIL & HI-RISE SILL

Width (in)	Height (in)	DP(+) psf	DP(-) psf	Anchors Head & Sill	Anchors Each Jamb
26.5	26	73.3	100.0	2	2
37	26	73.3	100.0	2	2
53.125	26	73.3	100.0	3	2
74	26	73.3	100.0	5	2
26.5	38.375	73.3	100.0	2	2
37	38.375	73.3	100.0	3	2
53.125	38.375	73.3	100.0	4	2
74	38.375	73.3	100.0	6	2
26.5	50.625	73.3	100.0	2	2
37	50.625	73.3	100.0	3	2
53.125	50.625	73.3	89.6	4	3
74	50.625	73.3	74.8	5	3
26.5	58	73.3	100.0	3	2
37	58	73.3	98.6	4	3
53.125	58	73.3	74.9	4	3
74	58	60.8	60.8	5	3
26.5	63	73.3	100.0	3	2
37	63	73.3	89.4	3	3
53.125	63	67.3	67.3	4	3
74	63	54.0	54.0	5	3
24	24	73.3	100.0	2	2
36	24	73.3	100.0	2	2
48	24	73.3	100.0	3	2
60	24	73.3	100.0	3	2
72	24	73.3	100.0	4	2
24	36	73.3	100.0	2	2
36	36	73.3	100.0	3	2
48	36	73.3	100.0	3	2
60	36	73.3	100.0	4	2
72	36	73.3	100.0	5	2
24	48	73.3	100.0	2	2
36	48	73.3	100.0	3	2
48	48	73.3	100.0	4	3
60	48	73.3	89.8	5	3
72	48	73.3	82.3	5	3
24	60	73.3	100.0	2	2
36	60	73.3	96.9	4	3
48	60	73.3	77.2	4	3
60	60	65.9	65.9	4	3
72	60	58.8	58.8	5	3

Pressure Limited to Negative 100psf.

8500 Non Impact Horizontal Sliding Window
Test # FTL 4456 - 3/16" Annealed Flange Frame (XO or OX)
w/ HEAVY DUTY MEETING RAIL & STANDARD SILL

Width (in)	Height (in)	DP(+) psf	DP(-) psf	Anchors Head & Sill	Anchors Each Jamb
26.5	26	60.0	100.0	2	2
37	26	60.0	100.0	2	2
53.125	26	60.0	100.0	3	2
74	26	60.0	100.0	5	2
26.5	38.375	60.0	100.0	2	2
37	38.375	60.0	100.0	3	2
53.125	38.375	60.0	100.0	4	2
74	38.375	60.0	83.8	5	2
26.5	50.625	60.0	100.0	2	2
37	50.625	60.0	100.0	3	2
53.125	50.625	60.0	77.0	4	2
74	50.625	60.0	63.6	5	2
26.5	58	60.0	100.0	3	2
37	58	60.0	88.7	3	3
53.125	58	60.0	67.1	4	2
74	58	53.7	53.7	4	3
26.5	63	60.0	100.0	3	2
37	63	60.0	80.5	3	2
53.125	63	60.0	60.6	4	2
74	63	48.3	48.3	4	2
24	24	60.0	100.0	2	2
36	24	60.0	100.0	2	2
48	24	60.0	100.0	3	2
60	24	60.0	100.0	3	2
72	24	60.0	100.0	4	2
24	36	60.0	100.0	2	2
36	36	60.0	100.0	3	2
48	36	60.0	100.0	3	2
60	36	60.0	94.8	4	2
72	36	60.0	88.1	5	2
24	48	60.0	100.0	2	2
36	48	60.0	100.0	3	2
48	48	60.0	89.7	4	2
60	48	60.0	76.0	4	2
72	48	60.0	69.5	5	2
24	60	60.0	100.0	2	2
36	60	60	87.2	3	3
48	60	60	69.5	3	2
60	60	56.7	56.7	4	2
72	60	51.6	51.6	4	2

Pressure Limited to Negative 100psf.

8500 Non Impact Horizontal Sliding Window
Test # FTL 4456 - 3/16" Annealed Flange Frame (XO or OX)
w/ HEAVY DUTY MEETING RAIL & HI-RISE SILL

Width (in)	Height (in)	DP(+) psf	DP(-) psf	Anchors Head & Sill	Anchors Each Jamb
26.5	26	73.3	100.0	2	2
37	26	73.3	100.0	2	2
53.125	26	73.3	100.0	3	2
74	26	73.3	100.0	5	2
26.5	38.375	73.3	100.0	2	2
37	38.375	73.3	100.0	3	2
53.125	38.375	73.3	100.0	4	2
74	38.375	73.3	83.8	5	2
26.5	50.625	73.3	100.0	2	2
37	50.625	73.3	100.0	3	2
53.125	50.625	73.3	77.0	4	2
74	50.625	63.6	63.6	5	2
26.5	58	73.3	100.0	3	2
37	58	73.3	88.7	3	2
53.125	58	67.1	67.1	4	2
74	58	53.7	53.7	4	2
26.5	63	73.3	100.0	3	2
37	63	73.3	80.5	3	2
53.125	63	60.6	60.6	4	2
74	63	48.3	48.3	4	2
24	24	73.3	100.0	2	2
36	24	73.3	100.0	2	2
48	24	73.3	100.0	3	2
60	24	73.3	100.0	3	2
72	24	73.3	100.0	4	2
24	36	73.3	100.0	2	2
36	36	73.3	100.0	3	2
48	36	73.3	100.0	3	2
60	36	73.3	94.8	4	2
72	36	73.3	88.1	5	2
24	48	73.3	100.0	2	2
36	48	73.3	100.0	3	2
48	48	73.3	89.7	4	2
60	48	73.3	76.0	4	2
72	48	69.5	69.5	5	2
24	60	73.3	100.0	2	2
36	60	73.3	87.2	3	3
48	60	69.5	69.5	3	2
60	60	56.7	56.7	4	2
72	60	51.6	51.6	4	2

Pressure Limited to Negative 100psf.

8500 Non Impact Horizontal Sliding Window
Test # FTL 4553 - 3/16" Annealed Flange Frame (XO or OX)
w/ STANDARD MEETING RAIL & STANDARD SILL

Width (in)	Height (in)	DP(+) psf	DP(-) psf	Anchors Head & Sill	Anchors Each Jamb
26.5	26	60.0	100.0	2	2
37	26	60.0	100.0	2	2
53.125	26	60.0	100.0	3	2
74	26	60.0	100.0	5	2
26.5	38.375	60.0	100.0	2	2
37	38.375	60.0	100.0	3	2
53.125	38.375	60.0	83.8	4	2
74	38.375	60.0	76.0	5	2
26.5	50.625	60.0	95.8	2	2
37	50.625	60.0	73.0	3	2
53.125	50.625	56.3	56.3	3	2
74	50.625	47.0	47.0	4	2
24	24	60.0	100.0	2	2
36	24	60.0	100.0	2	2
48	24	60.0	100.0	3	2
60	24	60.0	100.0	3	2
72	24	60.0	100.0	4	2
24	36	60.0	100.0	2	2
36	36	60.0	100.0	3	2
48	36	60.0	97.0	3	2
60	36	60.0	88.7	4	2
72	36	60.0	86.2	5	2
24	48	60.0	100.0	2	2
36	48	60.0	79.6	3	2
48	48	60.0	64.7	3	2
60	48	56.4	56.4	3	2
72	48	51.7	51.7	4	2

Pressure Limited to Negative 100psf.

8500 Non Impact Horizontal Sliding Window
Test # FTL 4553 - 3/16" Annealed Flange Frame (XO or OX)
w/ STANDARD MEETING RAIL & HI-RISE SILL

Width (in)	Height (in)	DP(+) psf	DP(-) psf	Anchors Head & Sill	Anchors Each Jamb
26.5	26	73.3	100.0	2	2
37	26	73.3	100.0	2	2
53.125	26	73.3	100.0	3	2
74	26	73.3	100.0	5	2
26.5	38.375	73.3	100.0	2	2
37	38.375	73.3	100.0	3	2
53.125	38.375	73.3	83.8	4	2
74	38.375	73.3	76.0	5	2
26.5	50.625	73.3	95.8	2	2
37	50.625	73.0	73.0	3	2
53.125	50.625	56.3	56.3	3	2
74	50.625	47.0	47.0	4	2
24	24	73.3	100.0	2	2
36	24	73.3	100.0	2	2
48	24	73.3	100.0	3	2
60	24	73.3	100.0	3	2
72	24	73.3	100.0	4	2
24	36	73.3	100.0	2	2
36	36	73.3	100.0	3	2
48	36	73.3	97.0	3	2
60	36	73.3	88.7	4	2
72	36	73.3	86.2	5	2
24	48	73.3	100.0	2	2
36	48	73.3	79.6	3	2
48	48	64.7	64.7	3	2
60	48	56.4	56.4	3	2
72	48	51.7	51.7	4	2

Pressure Limited to Negative 100psf.

8500 Non Impact Horizontal Sliding Window
Test # FTL 4547 - 1/8" Annealed Flange Frame (XO or OX)
w/ STANDARD MEETING RAIL & STANDARD SILL

Width (in)	Height (in)	DP(+) psf	DP(-) psf	Anchors Head & Sill	Anchors Each Jamb
26.5	26	60.0	100.0	2	2
37	26	60.0	100.0	2	2
53.125	26	60.0	92.5	3	2
74	26	60.0	67.7	3	2
26.5	38.375	60.0	100.0	2	2
37	38.375	60.0	76.9	2	2
53.125	38.375	60.0	65.2	3	2
74	38.375	51.7	51.7	3	2
26.5	50.625	60.0	79.7	2	2
37	50.625	60.0	60.7	2	2
53.125	50.625	44.6	44.6	2	2
74	50.625	39.1	39.1	3	2
24	24	60.0	100.0	2	2
36	24	60.0	100.0	2	2
48	24	60.0	100.0	3	2
60	24	60.0	87.3	3	2
72	24	60.0	72.0	3	2
24	36	60.0	100.0	2	2
36	36	60.0	84.0	2	2
48	36	60.0	73.9	3	2
60	36	60.0	65.7	3	2
72	36	56.4	56.4	3	2
24	48	60.0	92.2	2	2
36	48	60.0	66.2	2	2
48	48	49.0	49.0	2	2
60	48	46.9	46.9	3	2
72	48	42.9	42.9	3	2

Pressure Limited to Negative 100psf.

8500 Non Impact Horizontal Sliding Window
Test # FTL 4547 - 1/8" Annealed Flange Frame (XO or OX)
w/ STANDARD MEETING RAIL & HI-RISE SILL

Width (in)	Height (in)	DP(+) psf	DP(-) psf	Anchors Head & Sill	Anchors Each Jamb
26.5	26	73.3	100.0	2	2
37	26	73.3	100.0	2	2
53.125	26	73.3	92.5	3	2
74	26	67.7	67.7	3	2
26.5	38.375	73.3	100.0	2	2
37	38.375	73.3	76.9	2	2
53.125	38.375	65.2	65.2	3	2
74	38.375	51.7	51.7	3	2
26.5	50.625	73.3	79.7	2	2
37	50.625	60.7	60.7	2	2
53.125	50.625	44.6	44.6	2	2
74	50.625	39.1	39.1	3	2
24	24	73.3	100.0	2	2
36	24	73.3	100.0	2	2
48	24	73.3	100.0	3	2
60	24	73.3	87.3	3	2
72	24	72.0	72.0	3	2
24	36	73.3	100.0	2	2
36	36	73.3	84.0	2	2
48	36	73.3	73.9	3	2
60	36	65.7	65.7	3	2
72	36	56.4	56.4	3	2
24	48	73.3	92.2	2	2
36	48	66.2	66.2	2	2
48	48	49.0	49.0	2	2
60	48	46.9	46.9	3	2
72	48	42.9	42.9	3	2

Pressure Limited to Negative 100psf.

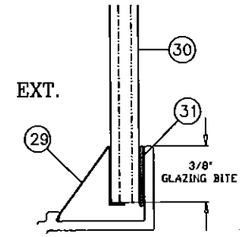

MONOLITHIC GLASS – SINGLE GLAZE
ANNEALED OR TEMPERED
1/8", 3/16" OR 1/4" THICK
(SEE DESIGN PRESSURE TABLES)

GLAZING DETAIL & DESCRIPTION

Note:

1. WINDOW WIDTHS & HEIGHTS ARE THE OVERALL EXTERIOR FRAME DIMENSIONS.

PRODUCT REVISED
as complying with the Florida
Building Code
Acceptance No 14-0908.16
Expiration Date 04/26/2016
By
Miami Dade Product Control

LAWSON INDUSTRIES, INC.
8501 N.W. 90 ST.
MEDLEY, FLORIDA 33166
PH No. (305) 696-8660

MANUFACTURER OF QUALITY ALUMINUM WINDOWS AND GLASS DOORS

HS-8500 HORIZONTAL ROLLING FLANGE WINDOW

GLASS LOAD CHARTS & MONOLITHIC GLAZING DETAIL (XO or OX)

Revision Notes:
Rev. A – Add 1/8" temp glass to XO configuration, sill anchor option & poly cam lock option.
B. Revised to Comply w/ 2010 FBC
C. Revised to Comply w/ 2014 FBC

Drawn By: N. ERAZO — Date Drawn: 05/02/05
Checked By: N. ERAZO — Date Revised: 08/11/14
Revision Level: C — Scale:
Drawing Number: L8500-0401 — Sheet: 5 OF 9 — Revision #:
Product & Reference Number:

THOMAS J. SOTOS
PROFESSIONAL ENGINEER
LIC. # 55225
STATE OF FLORIDA
DATE SEP 2014

8500 Non Impact Horizontal Sliding Window (XO 0r OX)
Test # HETI-08-2158 thru 08-2160 - 1/8" Tempered Flange Frame
w/ HEAVY DUTY MEETING RAIL & STANDARD SILL

Width (in)	Height (in)	DP(+) psf	DP(-) psf	Anchors Head & Sill	Anchors Each Jamb
26.5	26	60.0	100.0	2	2
37	26	60.0	100.0	2	2
53.125	26	60.0	100.0	3	2
74	26	60.0	100.0	5	2
26.5	38.375	60.0	100.0	2	2
37	38.375	60.0	100.0	3	2
53.125	38.375	60.0	100.0	4	2
74	38.375	60.0	100.0	6	2
26.5	50.625	60.0	100.0	2	2
37	50.625	60.0	100.0	3	2
53.125	50.625	60.0	93.0	4	3
74	50.625	60.0	77.6	5	3
26.5	58	60.0	100.0	3	2
37	58	60.0	100.0	4	3
53.125	58	60.0	77.6	4	3
74	58	60.0	63.1	5	3
26.5	63	60.0	100.0	3	2
37	63	60.0	92.7	4	3
53.125	63	60.0	69.8	4	3
74	63	56.0	56.0	5	3
24	24	60.0	100.0	2	2
36	24	60.0	100.0	2	2
48	24	60.0	100.0	3	2
60	24	60.0	100.0	3	2
72	24	60.0	100.0	4	2
24	36	60.0	100.0	2	2
36	36	60.0	100.0	3	2
48	36	60.0	100.0	3	2
60	36	60.0	100.0	4	2
72	36	60.0	100.0	5	2
24	48	60.0	100.0	2	2
36	48	60.0	100.0	3	2
48	48	60.0	100.0	4	3
60	48	60.0	93.1	5	3
72	48	60.0	85.4	6	3
24	60	60.0	100.0	2	2
36	60	60.0	100.0	4	3
48	60	60.0	80.0	4	3
60	60	60.0	68.3	4	3
72	60	60.0	61.0	5	3

Pressure Limited to Negative 100psf.

8500 Non Impact Horizontal Sliding Window (XO 0r OX)
Test # HETI-08-2158 thru 08-2160 - 1/8" Tempered Flange Frame
w/ HEAVY DUTY MEETING RAIL & HI-RISE SILL

Width (in)	Height (in)	DP(+) psf	DP(-) psf	Anchors Head & Sill	Anchors Each Jamb
26.5	26	73.3	100.0	2	2
37	26	73.3	100.0	2	2
53.125	26	73.3	100.0	3	2
74	26	73.3	100.0	5	2
26.5	38.375	73.3	100.0	2	2
37	38.375	73.3	100.0	3	2
53.125	38.375	73.3	100.0	4	2
74	38.375	73.3	100.0	6	2
26.5	50.625	73.3	100.0	2	2
37	50.625	73.3	100.0	3	2
53.125	50.625	73.3	93.0	4	3
74	50.625	73.3	77.6	5	3
26.5	58	73.3	100.0	3	2
37	58	73.3	100.0	4	3
53.125	58	73.3	77.6	4	3
74	58	63.1	63.1	5	3
26.5	63	73.3	100.0	3	2
37	63	73.3	92.7	4	3
53.125	63	69.8	69.8	4	3
74	63	56.0	56.0	5	3
24	24	73.3	100.0	2	2
36	24	73.3	100.0	2	2
48	24	73.3	100.0	3	2
60	24	73.3	100.0	3	2
72	24	73.3	100.0	4	2
24	36	73.3	100.0	2	2
36	36	73.3	100.0	3	2
48	36	73.3	100.0	3	2
60	36	73.3	100.0	4	2
72	36	73.3	100.0	5	2
24	48	73.3	100.0	2	2
36	48	73.3	100.0	3	2
48	48	73.3	100.0	4	3
60	48	73.3	93.1	5	3
72	48	73.3	85.4	6	3
24	60	73.3	100.0	2	2
36	60	73.3	100.0	4	3
48	60	73.3	80.0	4	3
60	60	68.3	68.3	4	3
72	60	61.0	61.0	5	3

Pressure Limited to Negative 100psf.

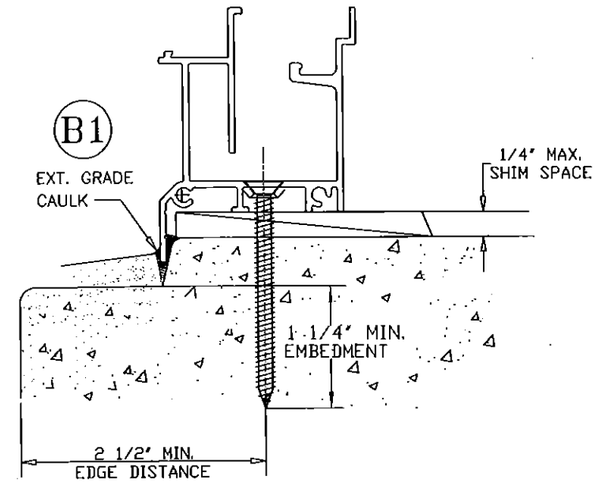

OPTIONAL SILL INSTALLATION DETAIL

ANCHORS NOTE:
ANCHORS TO BE #12 SMS OR WD. SCREWS INTO WOOD, OR 1/4" TAPCONS or APPROVED CONC. FASTENERS INTO CONC., WITH A MINIMUM OF 1 1/4" PENETRATION INTO WOOD OR CONC. (REFER TO LOAD TABLES FOR QUANTITIES REQUIRED)

* WHEN THE GAP BETWEEN THE WINDOW FRAME AND THE BUCK OR MASONRY IS LESS THAN 1/8", SHIMS ARE NOT REQUIRED.

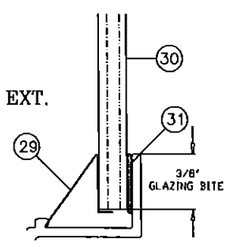

MONOLITHIC GLASS – SINGLE GLAZE
ANNEALED OR TEMPERED
1/8", 3/16" OR 1/4" THICK
(SEE DESIGN PRESSURE TABLES)

GLAZING DETAIL & DESCRIPTION

Note:

1. WINDOW WIDTHS & HEIGHTS ARE THE OVERALL EXTERIOR FRAME DIMENSIONS.

PRODUCT REVISED
as complying with the Florida
Building Code
Acceptance No. 14-0908.16
Expiration Date 01/26/2016
By
Miami Dade Product Control

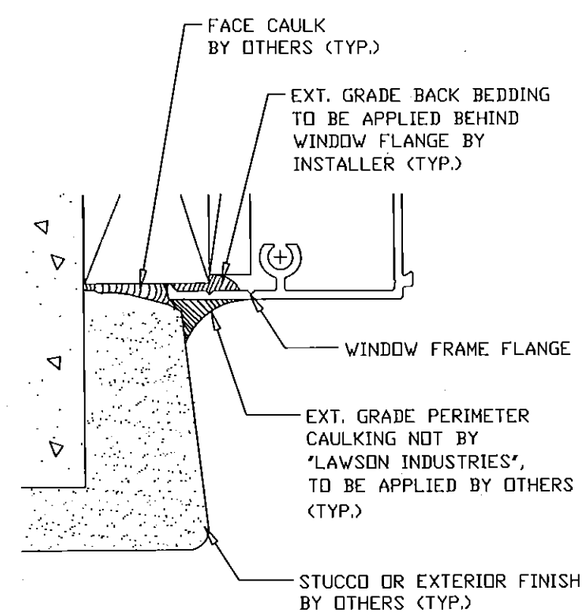

WINDOW INSTALLATION DETAIL

LAWSON INDUSTRIES, INC.
8501 N.W. 90 ST.
MEDLEY, FLORIDA 33166
PH No. (305) 696-8660

MANUFACTURER OF QUALITY ALUMINUM WINDOWS AND GLASS DOORS

HS-8500 HORIZONTAL ROLLING FLANGE WINDOW
GLASS LOAD CHARTS, GLAZING DETAIL, OPTIONAL INSTALLATION DETAIL

Revision #:
Sheet: 6 OF 9
Drawing Number: L8500-0401
Product Reference Number:

Revision Notes:
Rev. A – Add 1/8" temp glass to XO configuration, sill anchor option & poly cam lock option.
B. Revised to Comply w/ 2010 FBC
C. Revised to Comply w/ 2014 FBC

Drawn By: N. ERAZO
Date Drawn: 05/02/05
Checked By: N. ERAZO
Date Revised: 08/11/14
Revision Level: C
Scale:

THOMAS J. SOTOS
PROFESSIONAL ENGINEER
FL LIC. # 55226
STATE OF FLORIDA
DATE NOV 2 4 2014

8500 Non Impact Horizontal Sliding Window
Test # FTL 4429 - 1/4" Annealed Flange Frame (XOX)
w/ HEAVY DUTY MEETING RAIL & STANDARD SILL

Width (in)	Height (in)	DP(+) psf	DP(-) psf	Anchors Head & Sill	Anchors Each Jamb
53.125	26	60.0	100.0	3	2
74	26	60.0	100.0	5	2
106.375	26	60.0	100.0	7	2
111	26	60.0	100.0	7	2
53.125	38.375	60.0	100.0	4	2
74	38.375	60.0	100.0	6	2
106.375	38.375	60.0	76.9	7	2
111	38.375	60.0	73.1	7	2
53.125	50.625	60.0	100.0	6	2
74	50.625	60.0	81.9	6	2
106.375	50.625	60.0	65.0	7	2
111	50.625	60.0	61.9	7	2
53.125	58	60.0	90.8	6	2
74	58	60.0	70.3	6	2
106.375	58	57.2	57.2	7	2
111	58	55.5	55.5	8	2
53.125	63	60.0	82.1	6	2
74	63	60.0	62.5	6	2
106.375	63	52.1	52.1	7	2
111	63	51.1	51.1	8	2
72	24	60.0	100.0	4	2
84	24	60.0	100.0	5	2
96	24	60.0	100.0	6	2
108	24	60.0	100.0	6	2
120	24	60.0	100.0	7	2
72	36	60.0	100.0	6	2
84	36	60.0	94.4	6	2
96	36	60.0	87.0	7	2
108	36	60.0	78.6	7	2
120	36	60.0	68.5	7	2
72	48	60.0	87.2	6	2
84	48	60.0	80.3	7	2
96	48	60.0	74.3	7	2
108	48	60.0	66.4	7	2
120	48	59.3	59.3	8	2
72	60	60.0	69.2	6	2
84	60	60	61.5	6	2
96	60	58.6	58.6	7	2
108	60	54.8	54.8	8	2
120	60	51	51	8	2

Pressure Limited to Negative 100psf.

8500 Non Impact Horizontal Sliding Window
Test # FTL 4429 - 1/4" Annealed Flange Frame (XOX)
w/ HEAVY DUTY MEETING RAIL & HI-RISE SILL

Width (in)	Height (in)	DP(+) psf	DP(-) psf	Anchors Head & Sill	Anchors Each Jamb
53.125	26	73.3	100.0	3	2
74	26	73.3	100.0	5	2
106.375	26	73.3	100.0	7	2
111	26	73.3	100.0	7	2
53.125	38.375	73.3	100.0	4	2
74	38.375	73.3	100.0	6	2
106.375	38.375	73.3	76.9	7	2
111	38.375	73.1	73.1	7	2
53.125	50.625	73.3	100.0	6	2
74	50.625	73.3	81.9	6	2
106.375	50.625	65.0	65.0	7	2
111	50.625	61.9	61.9	7	2
53.125	58	73.3	90.8	6	2
74	58	70.3	70.3	6	2
106.375	58	57.2	57.2	7	2
111	58	55.5	55.5	8	2
53.125	63	73.3	82.1	6	2
74	63	62.5	62.5	6	2
106.375	63	52.1	52.1	7	2
111	63	51.1	51.1	8	2
72	24	73.3	100.0	4	2
84	24	73.3	100.0	5	2
96	24	73.3	100.0	6	2
108	24	73.3	100.0	6	2
120	24	73.3	100.0	7	2
72	36	73.3	100.0	6	2
84	36	73.3	94.4	6	2
96	36	73.3	87.0	7	2
108	36	73.3	78.6	7	2
120	36	68.5	68.5	7	2
72	48	73.3	87.2	6	2
84	48	73.3	80.3	7	2
96	48	73.3	74.3	7	2
108	48	66.4	66.4	7	2
120	48	59.3	59.3	8	2
72	60	69.2	69.2	6	2
84	60	61.5	61.5	6	2
96	60	58.6	58.6	7	2
108	60	54.8	54.8	8	2
120	60	51	51	8	2

Pressure Limited to Negative 100psf.

8500 Non Impact Horizontal Sliding Window
Test # FTL 4457 - 3/16" Annealed Flange Frame (XOX)
w/ HEAVY DUTY MEETING RAIL & STANDARD SILL

Width (in)	Height (in)	DP(+) psf	DP(-) psf	Anchors Head & Sill	Anchors Each Jamb
53.125	26	60.0	100.0	3	2
74	26	60.0	100.0	5	2
106.375	26	60.0	81.6	5	2
111	26	60.0	79.0	5	2
53.125	38.375	60.0	100.0	4	2
74	38.375	60.0	86.0	5	2
106.375	38.375	60.0	61.6	6	2
111	38.375	58.7	58.7	6	2
53.125	50.625	60.0	86.5	5	2
74	50.625	60.0	65.7	5	2
106.375	50.625	52.3	52.3	6	2
111	50.625	50.3	50.3	6	2
53.125	58	60.0	79.4	5	2
74	58	54.6	54.6	5	2
106.375	58	46.5	46.5	6	2
111	58	44.9	44.9	6	2
53.125	63	60.0	72.0	5	2
74	63	49.2	49.2	5	2
106.375	63	42.9	42.9	6	2
111	63	41.3	41.3	6	2
72	24	60.0	100.0	4	2
84	24	60.0	100.0	5	2
96	24	60.0	95.3	5	2
108	24	60.0	90.5	6	2
120	24	60.0	85.3	6	2
72	36	60.0	91.2	5	2
84	36	60.0	82.0	5	2
96	36	60.0	74.2	6	2
108	36	60.0	62.0	6	2
120	36	53.3	53.3	6	2
72	48	60.0	71.3	5	2
84	48	60.0	65.8	6	2
96	48	60.0	60.0	6	2
108	48	53.7	53.7	6	2
120	48	48.7	48.7	6	2
72	60	52.6	52.6	5	2
84	60	50.7	50.7	6	2
96	60	48.3	48.3	6	2
108	60	44.5	44.5	6	2
120	60	40.8	40.8	7	2

Pressure Limited to Negative 100psf.

8500 Non Impact Horizontal Sliding Window
Test # FTL 4457 - 3/16" Annealed Flange Frame (XOX)
w/ HEAVY DUTY MEETING RAIL & HI-RISE SILL

Width (in)	Height (in)	DP(+) psf	DP(-) psf	Anchors Head & Sill	Anchors Each Jamb
53.125	26	73.3	100.0	3	2
74	26	73.3	100.0	5	2
106.375	26	73.3	81.6	5	2
111	26	73.3	79.0	5	2
53.125	38.375	73.3	100.0	4	2
74	38.375	73.3	86.0	5	2
106.375	38.375	61.6	61.6	6	2
111	38.375	58.7	58.7	6	2
53.125	50.625	73.3	86.5	5	2
74	50.625	65.7	65.7	5	2
106.375	50.625	52.3	52.3	6	2
111	50.625	50.3	50.3	6	2
53.125	58	73.3	79.4	5	2
74	58	54.6	54.6	5	2
106.375	58	46.5	46.5	6	2
111	58	44.9	44.9	6	2
53.125	63	72.0	72.0	5	2
74	63	49.2	49.2	5	2
106.375	63	42.9	42.9	6	2
111	63	41.3	41.3	6	2
72	24	73.3	100.0	4	2
84	24	73.3	100.0	5	2
96	24	73.3	95.3	5	2
108	24	73.3	90.5	6	2
120	24	73.3	85.3	6	2
72	36	73.3	91.2	5	2
84	36	73.3	82.0	5	2
96	36	73.3	74.2	6	2
108	36	62.0	62.0	6	2
120	36	53.3	53.3	6	2
72	48	71.3	71.3	5	2
84	48	65.8	65.8	6	2
96	48	60.0	60.0	6	2
108	48	53.7	53.7	6	2
120	48	48.7	48.7	6	2
72	60	52.6	52.6	5	2
84	60	50.7	50.7	6	2
96	60	48.3	48.3	6	2
108	60	44.5	44.5	6	2
120	60	40.8	40.8	7	2

Pressure Limited to Negative 100psf.

8500 Non Impact Horizontal Sliding Window
Test # FTL 4594 - 3/16" Annealed Flange Frame (XOX)
w/ STANDARD MEETING RAIL & STANDARD SILL

Width (in)	Height (in)	DP(+) psf	DP(-) psf	Anchors Head & Sill	Anchors Each Jamb
53.125	26	60.0	100.0	3	2
74	26	60.0	100.0	5	2
106.375	26	60.0	81.6	5	2
111	26	60.0	79.0	5	2
53.125	38.375	60.0	93.2	4	2
74	38.375	60.0	79.6	5	2
106.375	38.375	60.0	61.6	6	2
111	38.375	58.7	58.7	6	2
53.125	50.625	60.0	64.3	4	2
74	50.625	51.9	51.9	4	2
106.375	50.625	44.6	44.6	5	2
111	50.625	44.1	44.1	5	2
72	24	60.0	100.0	4	2
84	24	60.0	100.0	5	2
96	24	60.0	95.3	5	2
108	24	60.0	90.5	6	2
120	24	60.0	85.3	6	2
72	36	60.0	89.4	5	2
84	36	60.0	82.0	5	2
96	36	60.0	74.2	6	2
108	36	60.0	62.0	6	2
120	36	53.3	53.3	6	2
72	48	56.9	56.9	4	2
84	48	52.8	52.8	5	2
96	48	50.3	50.3	5	2
108	48	48.7	48.7	6	2
120	48	47.3	47.3	6	2

Pressure Limited to Negative 100psf.

8500 Non Impact Horizontal Sliding Window
Test # FTL 4594 - 3/16" Annealed Flange Frame (XOX)
w/ STANDARD MEETING RAIL & HI-RISE SILL

Width (in)	Height (in)	DP(+) psf	DP(-) psf	Anchors Head & Sill	Anchors Each Jamb
53.125	26	73.3	100.0	3	2
74	26	73.3	100.0	5	2
106.375	26	73.3	81.6	5	2
111	26	73.3	79.0	5	2
53.125	38.375	73.3	93.2	4	2
74	38.375	73.3	79.6	5	2
106.375	38.375	61.6	61.6	6	2
111	38.375	58.7	58.7	6	2
53.125	50.625	64.3	64.3	4	2
74	50.625	51.9	51.9	4	2
106.375	50.625	44.6	44.6	5	2
111	50.625	44.1	44.1	5	2
72	24	73.3	100.0	4	2
84	24	73.3	100.0	5	2
96	24	73.3	95.3	5	2
108	24	73.3	90.5	6	2
120	24	73.3	85.3	6	2
72	36	73.3	89.4	5	2
84	36	73.3	82.0	5	2
96	36	73.3	74.2	6	2
108	36	62.0	62.0	6	2
120	36	53.3	53.3	6	2
72	48	56.9	56.9	4	2
84	48	52.8	52.8	5	2
96	48	50.3	50.3	5	2
108	48	48.7	48.7	6	2
120	48	47.3	47.3	6	2

Pressure Limited to Negative 100psf.

8500 Non Impact Horizontal Sliding Window
Test # FTL 4578 - 1/8" Annealed Flange Frame (XOX)
w/ STANDARD MEETING RAIL & STANDARD SILL

Width (in)	Height (in)	DP(+) psf	DP(-) psf	Anchors Head & Sill	Anchors Each Jamb
53.125	26	60.0	97.8	3	2
74	26	60.0	73.6	3	2
106.375	26	43.0	43.0	3	2
111	26	40.5	40.5	3	2
53.125	38.375	60.0	62.5	3	2
74	38.375	53.4	53.4	4	2
106.375	38.375	38.7	38.7	4	2
111	38.375	37.2	37.2	4	2
53.125	50.625	43.1	43.1	3	2
74	50.625	34.8	34.8	3	2
106.375	50.625	29.5	29.5	4	2
111	50.625	28.2	28.2	4	2
72	24	60.0	78.2	3	2
84	24	60.0	62.0	3	2
96	24	51.1	51.1	3	2
108	24	43.8	43.8	3	2
120	24	38.9	38.9	3	2
72	36	59.7	59.7	4	2
84	36	51.3	51.3	4	2
96	36	45.1	45.1	4	2
108	36	40.0	40.0	4	2
120	36	35.3	35.3	4	2
72	48	38.2	38.2	3	2
84	48	35.4	35.4	3	2
96	48	33.7	33.7	4	2
108	48	30.6	30.6	4	2
120	48	27.4	27.4	4	2

8500 Non Impact Horizontal Sliding Window
Test # FTL 4578 - 1/8" Annealed Flange Frame (XOX)
w/ STANDARD MEETING RAIL & HI-RISE SILL

Width (in)	Height (in)	DP(+) psf	DP(-) psf	Anchors Head & Sill	Anchors Each Jamb
53.125	26	73.3	97.8	3	2
74	26	73.3	73.6	3	2
106.375	26	43.0	43.0	3	2
111	26	40.5	40.5	3	2
53.125	38.375	62.5	62.5	3	2
74	38.375	53.4	53.4	4	2
106.375	38.375	38.7	38.7	4	2
111	38.375	37.2	37.2	4	2
53.125	50.625	43.1	43.1	3	2
74	50.625	34.8	34.8	3	2
106.375	50.625	29.5	29.5	4	2
111	50.625	28.2	28.2	4	2
72	24	73.3	78.2	3	2
84	24	62.0	62.0	3	2
96	24	51.1	51.1	3	2
108	24	43.8	43.8	3	2
120	24	38.9	38.9	3	2
72	36	59.7	59.7	4	2
84	36	51.3	51.3	4	2
96	36	45.1	45.1	4	2
108	36	40.0	40.0	4	2
120	36	35.3	35.3	4	2
72	48	38.2	38.2	3	2
84	48	35.4	35.4	3	2
96	48	33.7	33.7	4	2
108	48	30.6	30.6	4	2
120	48	27.4	27.4	4	2

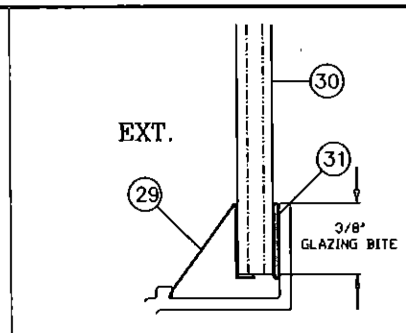

MONOLITHIC GLASS – SINGLE GLAZE
ANNEALED OR TEMPERED
1/8", 3/16" OR 1/4" THICK
(SEE DESIGN PRESSURE TABLES)

GLAZING DETAIL & DESCRIPTION

Note:

1. WINDOW WIDTHS & HEIGHTS ARE THE OVERALL EXTERIOR FRAME DIMENSIONS.

PRODUCT REVISED
as complying with the Florida Building Code
Acceptance No 14-0908.16
Expiration Date 01/26/2016
By
Miami Dade Product Control

LAWSON INDUSTRIES, INC.
8501 N.W. 90 ST.
MEDLEY, FLORIDA 33166
PH No. (305) 696-8660
MANUFACTURER OF QUALITY ALUMINUM WINDOWS AND GLASS DOORS

HS-8500 HORIZONTAL ROLLING FLANGE WINDOW
GLASS LOAD CHARTS & MONOLITHIC GLAZING DETAIL (XOX)

Revision #:
Sheet: 7 OF 9
Product Reference Number:
Drawing Number: LB500-0401

Revision Notes:
Rev. A – Add 1/8" temp glass to XO configuration, sill anchor option & poly cam lock option.
B. Revised to Comply w/ 2010 FBC
C. Revised to Comply w/ 2014 FBC

Drawn By: N. ERAZO
Date Drawn: 05/02/05
Checked By: N. ERAZO
Date Revised: 08/11/14
Revision Level: C
Scale:

THOMAS J. SOTOS PROFESSIONAL ENGINEER LICENSE # 55225
No 55225
STATE OF FLORIDA
PROFESSIONAL ENGINEER

DATE

8500 Non Impact Horizontal Sliding Window - XOX
Test # FTL 4541 - 1/8" Annealed Insulated Flange Frame
w/ HEAVYDUTY MEETING RAIL & STANDARD SILL

Width (in)	Height (in)	DP(+) psf	DP(-) psf	Anchors	
				Head & Sill	Each Jamb
53.125	26	60.0	100.0	3	2
74	26	60.0	100.0	5	2
106.375	26	60.0	77.4	5	2
111	26	60.0	72.9	5	2
53.125	38.375	60.0	100.0	4	2
74	38.375	60.0	98.5	6	2
106.375	38.375	60.0	69.7	6	2
111	38.375	60.0	66.9	6	2
53.125	50.625	60.0	80.9	5	2
74	50.625	60.0	75.0	6	2
106.375	50.625	53.2	53.2	6	2
111	50.625	50.8	50.8	6	2
53.125	58	60.0	68.1	5	2
74	58	60.0	62.7	6	2
106.375	58	46.1	46.1	6	2
111	58	44.3	44.3	6	2
53.125	63	60.0	61.8	4	2
74	63	56.2	56.2	6	2
106.375	63	42.8	42.8	6	2
111	63	40.9	40.9	6	2
72	24	60.0	100.0	4	2
84	24	60.0	100.0	5	2
96	24	60.0	91.9	5	2
108	24	60.0	78.8	5	2
120	24	60.0	70.0	5	2
72	36	60.0	100.0	6	2
84	36	60.0	92.4	6	2
96	36	60	81.2	6	2
108	36	60	72	6	2
120	36	60	63.6	6	2
72	48	60	81.6	6	2
84	48	60	71.5	6	2
96	48	60.0	62.9	6	2
108	48	55.1	55.1	6	2
120	48	49.4	49.4	6	2
72	60	60.0	61.0	6	2
84	60	55.4	55.4	6	2
96	60	49.9	49.9	6	2
108	60	44.2	44.2	6	2
120	60	39.6	39.6	6	2

Pressure Limited to Negative 100psf.

8500 Non Impact Horizontal Sliding Window - XOX
Test # FTL 4541 - 1/8" Annealed Insulated Flange Frame
w/ HEAVYDUTY MEETING RAIL & HI-RISE SILL

Width (in)	Height (in)	DP(+) psf	DP(-) psf	Anchors	
				Head & Sill	Each Jamb
53.125	26	73.3	100.0	3	2
74	26	73.3	100.0	5	2
106.375	26	73.3	77.4	5	2
111	26	72.9	72.9	5	2
53.125	38.375	73.3	100.0	4	2
74	38.375	73.3	98.5	6	2
106.375	38.375	69.7	69.7	6	2
111	38.375	66.9	66.9	6	2
53.125	50.625	73.3	80.9	5	2
74	50.625	73.3	75.0	6	2
106.375	50.625	53.2	53.2	6	2
111	50.625	50.8	50.8	6	2
53.125	58	68.1	68.1	5	2
74	58	62.7	62.7	6	2
106.375	58	46.1	46.1	6	2
111	58	44.3	44.3	6	2
53.125	63	61.8	61.8	4	2
74	63	56.2	56.2	6	2
106.375	63	42.8	42.8	6	2
111	63	40.9	40.9	6	2
72	24	73.3	100.0	4	2
84	24	73.3	100.0	5	2
96	24	73.3	91.9	5	2
108	24	73.3	78.8	5	2
120	24	70.0	70.0	5	2
72	36	73.3	100.0	6	2
84	36	73.3	92.4	6	2
96	36	73.3	81.2	6	2
108	36	72.0	72.0	6	2
120	36	63.6	63.6	6	2
72	48	73.3	81.6	6	2
84	48	71.5	71.5	6	2
96	48	62.9	62.9	6	2
108	48	55.1	55.1	6	2
120	48	49.4	49.4	6	2
72	60	61.0	61.0	6	2
84	60	55.4	55.4	6	2
96	60	49.9	49.9	6	2
108	60	44.2	44.2	6	2
120	60	39.6	39.6	6	2

Pressure Limited to Negative 100psf.

8500 Non Impact Horizontal Sliding Window - XO or OX
Test # FTL 4533 - 1/8" Annealed Insulated Flange Frame
w/ HEAVYDUTY MEETING RAIL & STANDARD SILL

Width (in)	Height (in)	DP(+) psf	DP(-) psf	Anchors	
				Head & Sill	Each Jamb
26.5	26	60.0	100.0	2	2
37	26	60.0	100.0	2	2
53.125	26	60.0	100.0	3	2
74	26	60.0	100.0	5	2
26.5	38.375	60.0	100.0	2	2
37	38.375	60.0	100.0	3	2
53.125	38.375	60.0	100.0	4	2
74	38.375	60.0	93.1	5	2
26.5	50.625	60.0	100.0	2	2
37	50.625	60.0	100.0	3	2
53.125	50.625	60.0	80.3	4	3
74	50.625	60.0	71.7	5	3
26.5	58	60.0	100.0	3	2
37	58	60.0	98.6	4	3
53.125	58	60.0	66.0	4	2
74	58	60.0	60.8	5	3
26.5	63	60.0	100.0	3	2
37	63	60.0	89.4	3	3
53.125	63	57.0	57.0	4	2
74	63	54.0	54.0	5	3
24	24	60.0	100.0	2	2
36	24	60.0	100.0	2	2
48	24	60.0	100.0	3	2
60	24	60.0	100.0	3	2
72	24	60.0	100.0	4	2
24	36	60.0	100.0	2	2
36	36	60.0	100.0	3	2
48	36	60.0	100.0	3	2
60	36	60.0	100.0	4	2
72	36	60.0	100.0	5	2
24	48	60.0	100.0	2	2
36	48	60.0	100.0	3	2
48	48	60.0	88.3	4	2
60	48	60.0	85.7	4	3
72	48	60.0	77.3	5	3
24	60	60.0	100.0	2	2
36	60	60	96.9	4	3
48	60	60	66.0	3	2
60	60	60	63.1	4	3
72	60	58.8	58.8	5	3

Pressure Limited to Negative 100psf.

8500 Non Impact Horizontal Sliding Window - XO or OX
Test # FTL 4533 - 1/8" Annealed Insulated Flange Frame
w/ HEAVYDUTY MEETING RAIL & HI-RISE SILL

Width (in)	Height (in)	DP(+) psf	DP(-) psf	Anchors	
				Head & Sill	Each Jamb
26.5	26	73.3	100.0	2	2
37	26	73.3	100.0	2	2
53.125	26	73.3	100.0	3	2
74	26	73.3	100.0	5	2
26.5	38.375	73.3	100.0	2	2
37	38.375	73.3	100.0	3	2
53.125	38.375	73.3	100.0	4	2
74	38.375	73.3	93.1	5	2
26.5	50.625	73.3	100.0	2	2
37	50.625	73.3	100.0	3	2
53.125	50.625	73.3	80.3	4	3
74	50.625	71.7	71.7	5	3
26.5	58	73.3	100.0	3	2
37	58	73.3	98.6	4	3
53.125	58	66.0	66.0	4	2
74	58	60.8	60.8	5	3
26.5	63	73.3	100.0	3	2
37	63	73.3	89.4	3	3
53.125	63	57.0	57.0	4	2
74	63	54.0	54.0	5	3
24	24	73.3	100.0	2	2
36	24	73.3	100.0	2	2
48	24	73.3	100.0	3	2
60	24	73.3	100.0	3	2
72	24	73.3	100.0	4	2
24	36	73.3	100.0	2	2
36	36	73.3	100.0	3	2
48	36	73.3	100.0	3	2
60	36	73.3	100.0	4	2
72	36	73.3	100.0	5	2
24	48	73.3	100.0	2	2
36	48	73.3	100.0	3	2
48	48	73.3	88.3	4	2
60	48	73.3	85.7	4	3
72	48	73.3	77.3	5	3
24	60	73.3	100.0	2	2
36	60	73.3	96.9	4	3
48	60	66.0	66.0	3	2
60	60	63.1	63.1	4	3
72	60	58.8	58.8	5	3

Pressure Limited to Negative 100psf.

8500 Non Impact Horizontal Sliding Window - XOX
Test # FTL 4588 - 1/8" Annealed Insulated Flange Frame
w/ STANDARD MEETING RAIL & STANDARD SILL

Width (in)	Height (in)	DP(+) psf	DP(-) psf	Anchors	
				Head & Sill	Each Jamb
53.125	26	60.0	100.0	3	2
74	26	60.0	100.0	5	2
106.375	26	60.0	77.4	5	2
111	26	60.0	72.9	5	2
53.125	38.375	60.0	93.2	4	2
74	38.375	60.0	79.6	5	2
106.375	38.375	60.0	69.7	6	2
111	38.375	60.0	66.9	6	2
53.125	50.625	60.0	64.3	4	2
74	50.625	51.9	51.9	4	2
106.375	50.625	44.6	44.6	5	2
111	50.625	44.1	44.1	5	2
72	24	60.0	100.0	4	2
84	24	60.0	100.0	5	2
96	24	60.0	91.9	5	2
108	24	60.0	78.8	5	2
120	24	60.0	70.0	5	2
72	36	60.0	89.4	5	2
84	36	60.0	85.7	6	2
96	36	60.0	81.2	6	2
108	36	60.0	72.0	6	2
120	36	60.0	63.6	6	2
72	48	56.9	56.9	4	2
84	48	52.8	52.8	5	2
96	48	50.3	50.3	5	2
108	48	48.7	48.7	6	2
120	48	47.3	47.3	6	2

Pressure Limited to Negative 100psf.

8500 Non Impact Horizontal Sliding Window - XOX
Test # FTL 4588 - 1/8" Annealed Insulated Flange Frame
w/ STANDARD MEETING RAIL & HI-RISE SILL

Width (in)	Height (in)	DP(+) psf	DP(-) psf	Anchors	
				Head & Sill	Each Jamb
53.125	26	73.3	100.0	3	2
74	26	73.3	100.0	5	2
106.375	26	73.3	77.4	5	2
111	26	72.9	72.9	5	2
53.125	38.375	73.3	93.2	4	2
74	38.375	73.3	79.6	5	2
106.375	38.375	69.7	69.7	6	2
111	38.375	66.9	66.9	6	2
53.125	50.625	64.3	64.3	4	2
74	50.625	51.9	51.9	4	2
106.375	50.625	44.6	44.6	5	2
111	50.625	44.1	44.1	5	2
72	24	73.3	100.0	4	2
84	24	73.3	100.0	5	2
96	24	73.3	91.9	5	2
108	24	73.3	78.8	5	2
120	24	70.0	70.0	5	2
72	36	73.3	89.4	5	2
84	36	73.3	85.7	6	2
96	36	73.3	81.2	6	2
108	36	72.0	72.0	6	2
120	36	63.6	63.6	6	2
72	48	56.9	56.9	4	2
84	48	52.8	52.8	5	2
96	48	50.3	50.3	5	2
108	48	48.7	48.7	6	2
120	48	47.3	47.3	6	2

Pressure Limited to Negative 100psf.

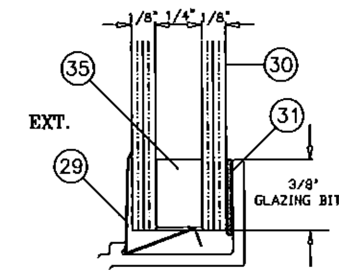

1/2" OVERALL INSULATED GLASS

CONSIST OF:
1/8" ANNEALED OR TEMPERED LITE
+ 1/4" AIR SPACE
+ 1/8" ANNEALED OR TEMPERED LITE
(SEE CORRESPONDING DESIGN PRESSURE CHARTS)

GLAZING DETAIL & DESCRIPTION

Note:

1. WINDOW WIDTHS & HEIGHTS ARE THE OVERALL EXTERIOR FRAME DIMENSIONS.

PRODUCT REVISED
as complying with the Florida Building Code
Acceptance No 14-0908.16
Expiration Date 01/26/2016
By [signature]
Miami Dade Product Control

THOMAS J. SOTOS
PROFESSIONAL ENGINEER
No 55225
STATE OF FLORIDA
DATE

Revision Notes:
Rev. A – Add 1/8" temp glass to XO configuration, sill anchor option & poly cam lock option.
B. Revised to Comply w/ 2010 FBC
C. Revised to Comply w/ 2014 FBC

Drawn By: N. ERAZO | Date Drawn: 05/02/05
Checked By: N. ERAZO | Date Revised: 08/11/14
Revision Level: C | Scale:

LAWSON INDUSTRIES, INC.
8501 N.W. 90 ST.
MEDLEY, FLORIDA 33166
PH No. (305) 696-8660

MANUFACTURER OF QUALITY ALUMINUM WINDOWS AND GLASS DOORS

HS-8500 HORIZONTAL ROLLING FLANGE WINDOW
GLASS LOAD CHARTS, INSULATED GLAZING DETAIL

Product Reference Number: | Drawing Number: L8500-0401 | Sheet: 8 OF 9 | Revision #:

FRAME HEAD
L-7503

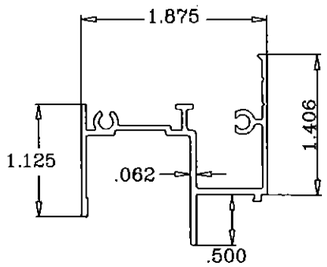

VENT INTERLOCK RAIL (Heavy Duty)
L-7506

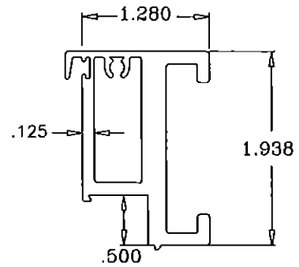

GLAZING BEAD
L-7516

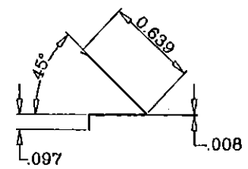

FIXED MEETING RAIL
L-7504

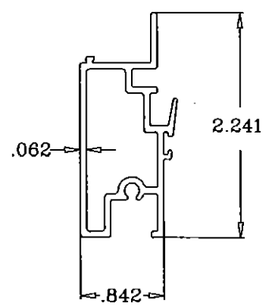

VENT INTERLOCK RAIL (Standard Duty)
L-7505

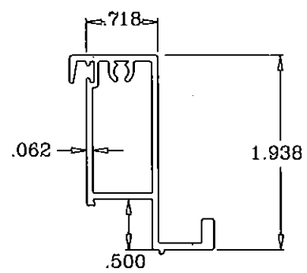

FRAME SILL RISER ADAPTER
L-8503

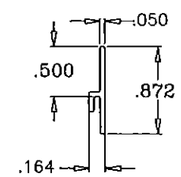

VENT JAMB RAIL
L-7507

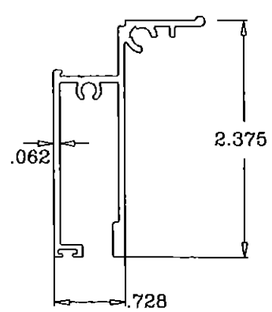

FRAME SILL
L-8501

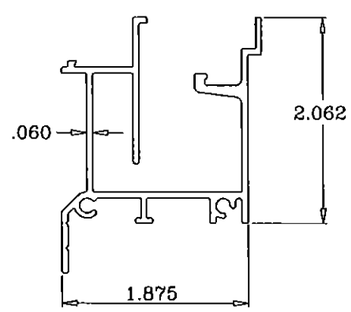

FRAME SILL ANCHOR CLIP
L-5108

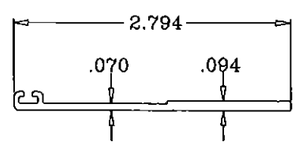

FRAME JAMB
L-8502

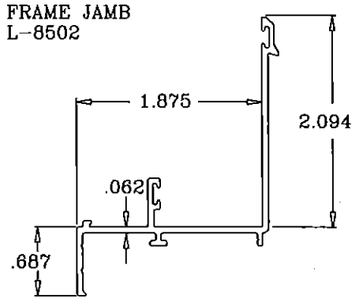

VENT TOP / BOTTOM RAIL
L-7508

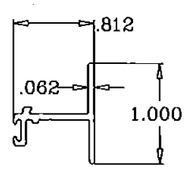

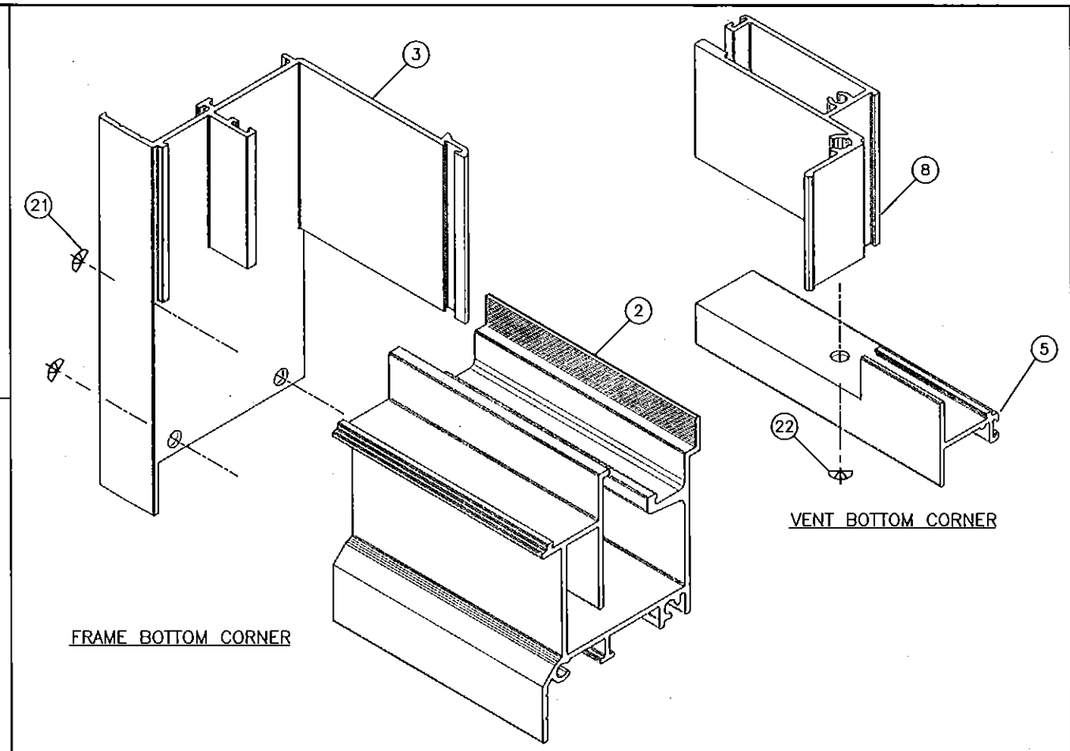

FRAME & SASH CORNER DETAILS

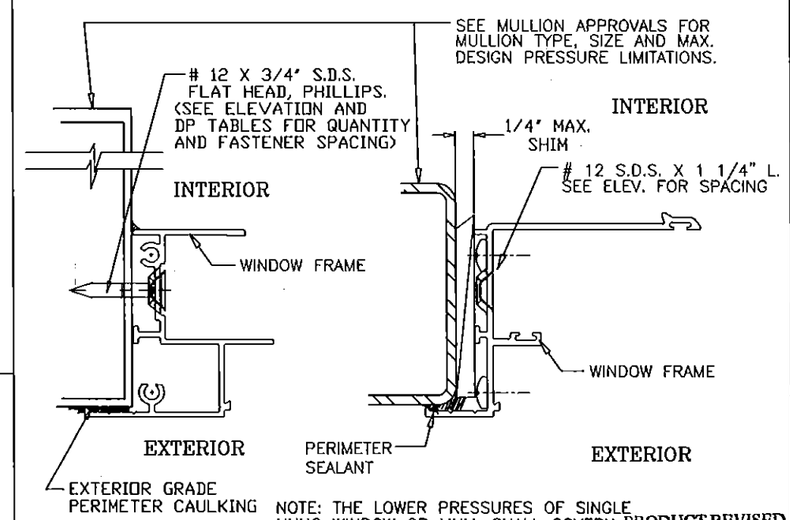

NOTE: THE LOWER PRESSURES OF SINGLE HUNG WINDOW OR MULL SHALL GOVERN

1. ALL STEEL IN CONTACT WITH ALUM. TO BE PAINTED OR PLATED.
2. METAL STRUCTURES: (STEEL OR ALUM. 1/8" MIN. THICK)
   A) STEEL : Fy = 36 KSI MIN.
   B) ALUMINUM : 6063-T5 MIN.

PRODUCT REVISED
as complying with the Florida Building Code
Acceptance No 14-0908.16
Expiration Date 01/26/2016
By
Miami Dade Product Control

E

MULLION & METAL STRUCTURE ATTACHMENT DETAIL

LAWSON INDUSTRIES, INC.
8501 N.W. 90 ST.
MEDLEY, FLORIDA 33166
PH No. (305) 696-8660

MANUFACTURER OF QUALITY ALUMINUM WINDOWS AND GLASS DOORS

HS-8500 HORIZONTAL ROLLING FLANGE WINDOW

EXTRUSION DETAILS, CORNER ASSEMBLY DETAILS & METAL ATTACHMENT DETAILS

Product Reference Number: | Drawing Number: L8500-0401 | Sheet: 9 OF 9 | Revision #:

Revision Notes:
Rev. A – Add 1/8" temp glass to XO configuration, sill anchor option & poly cam lock option.
B. Revised to Comply w/ 2010 FBC
C. Revised to Comply w/ 2014 FBC

Drawn By: N. ERAZO | Date Drawn: 05/02/05
Checked By: N. ERAZO | Date Revised: 08/11/14
Revision Level: C | Scale:

THOMAS J. SOTOS
PROFESSIONAL ENGINEER
LICENSE No 55225
STATE OF FLORIDA
PROFESSIONAL ENGINEER
DATE SEP 2014