MIAMI-DADE COUNTY
PRODUCT CONTROL SECTION
11805 SW 26 Street, Room 208
Miami, Florida 33175-2474
T (786) 315-2590 F (786) 315-2599
www.miamidade.gov/economy

DEPARTMENT OF REGULATORY AND ECONOMIC RESOURCES (RER)
BOARD AND CODE ADMINISTRATION DIVISION

NOTICE OF ACCEPTANCE (NOA)

Industrial Louvers, Inc.
511 South 7th Street
Delano, MN 55328

SCOPE:

This NOA is being issued under the applicable rules and regulations governing the use of construction materials. The documentation submitted has been reviewed and accepted by Miami-Dade County RER-Product Control Section to be used in Miami Dade County and other areas where allowed by the Authority Having Jurisdiction (AHJ).

This NOA shall not be valid after the expiration date stated below. The Miami-Dade County Product Control Section (In Miami Dade County) and/or the AHJ (in areas other than Miami Dade County) reserve the right to have this product or material tested for quality assurance purposes. If this product or material fails to perform in the accepted manner, the manufacturer will incur the expense of such testing and the AHJ may immediately revoke, modify, or suspend the use of such product or material within their jurisdiction. RER reserves the right to revoke this acceptance, if it is determined by Miami-Dade County Product Control Section that this product or material fails to meet the requirements of the applicable building code.

This product is approved as described herein, and has been designed to comply with the Florida Building Code, including the High Velocity Hurricane Zone.

DESCRIPTION: Model SP537DC 5" Deep Aluminum Louver

APPROVAL DOCUMENT: Drawing No. **RD1032**, titled "SP-537DC 5" Deep Storm Performance Louver", sheets 1 through 11 of 11, dated 03/21/2013, with revision 6 dated 04/15/2014, prepared by Industrial Louvers, Inc., signed and sealed by L. David Rice, P.E., bearing the Miami-Dade County Product Control revision stamp with the Notice of Acceptance number and expiration date by the Miami-Dade County Product Control Section.

MISSILE IMPACT RATING: Large and Small Missile Impact Resistant

LABELING: Each unit shall bear a permanent label with the manufacturer's name or logo, city, state, model/series, and following statement: "Miami-Dade County Product Control Approved", unless otherwise noted herein.

RENEWAL of this NOA shall be considered after a renewal application has been filed and there has been no change in the applicable building code negatively affecting the performance of this product.

TERMINATION of this NOA will occur after the expiration date or if there has been a revision or change in the materials, use, and/or manufacture of the product or process. Misuse of this NOA as an endorsement of any product, for sales, advertising or any other purposes shall automatically terminate this NOA. Failure to comply with any section of this NOA shall be cause for termination and removal of NOA.

ADVERTISEMENT: The NOA number preceded by the words Miami-Dade County, Florida, and followed by the expiration date may be displayed in advertising literature. If any portion of the NOA is displayed, then it shall be done in its entirety.

INSPECTION: A copy of this entire NOA shall be provided to the user by the manufacturer or its distributors and shall be available for inspection at the job site at the request of the Building Official.

This NOA **revises NOA # 13-0717.12** and consists of this page 1 and evidence page E-1, as well as approval document mentioned above.

The submitted documentation was reviewed by **Carlos M. Utrera, P.E.**

MIAMI-DADE COUNTY APPROVED

12/03/2014

NOA No. 14-0908.22
Expiration Date: July 10, 2018
Approval Date: December 11, 2014

NOTICE OF ACCEPTANCE: EVIDENCE SUBMITTED

A. DRAWINGS

1. Drawing No. **RD1032**, titled "SP-537DC 5" Deep Storm Performance Louver", sheets 1 through 11 of 11, dated 03/21/2013, with revision 6 dated 04/15/2014, prepared by Industrial Louvers, Inc., signed and sealed by L. David Rice, P.E.

B. TESTS ***"Submitted under NOA # 08-0513.08"***

1. Test reports on 1) Uniform Static Air Pressure Test, Loading per FBC TAS 202-94
   2) Large Missile Impact Test per FBC, TAS 201-94
   3) Cyclic Wind Pressure Loading per FBC, TAS 203-94

   Along with marked-up drawings and installation diagram of Model SP-537DC Aluminum Louver, prepared by Architectural Testing, Inc., Test Report No. **79282.01-201-18**, dated 03/20/2008, signed and sealed by Joseph A. Reed, P.E.

C. CALCULATIONS ***"Submitted under NOA # 13-0717.12"***

1. Anchor verification calculations and structural analysis prepared by Rice Engineering, dated 07/11/2013, signed and sealed by L. David Rice, P.E.

   "Submitted under NOA # 08-0513.08"

2. Anchor verification calculations and structural analysis prepared by Rice Engineering, dated 05/05/2008, signed and sealed by L. David Rice, P.E.

D. QUALITY ASSURANCE

1. Miami-Dade Department of Regulatory and Economic Resources (RER)

E. MATERIAL CERTIFICATIONS

1. None.

F. STATEMENTS

1. Statement letter of conformance to the 5th edition (2014) FBC issued by Rice Engineering, dated 08/25/2014, signed and sealed by L. David Rice, P.E.

   "Submitted under NOA # 13-0717.12"

2. Statement letter of no financial interest issued by Rice Engineering, dated 07/09/2013, signed and sealed by L. David Rice, P.E.

12/03/2014

Carlos M. Utrera, P.E.
Product Control Examiner
NOA No. 14-0908.22
Expiration Date: July 10, 2018
Approval Date: December 11, 2014

GENERAL NOTES:

G-01 IT SHALL BE THE RESPONSIBILITY OF THE PERMIT HOLDER TO VERIFY THE STRUCTURAL INTEGRITY OF THE EXISTING STRUCTURE TO SUPPORT THE LOADS IMPOSED BY THE LOUVERS.

G-02 THESE LOUVER SYSTEMS HAVE BEEN DESIGNED AND TESTED IN ACCORDANCE WITH THE 2014 FLORIDA BUILDING CODE (FBC) AND FBC PROTOCOLS TAS-201 LARGE MISSILE, TAS-202, AND TAS-203 FOR AREAS INCLUDING HIGH VELOCITY HURRICANE ZONES.

G-03 EACH LOUVER ASSEMBLY SHALL BE PERMANENTLY LABELED AS FOLLOWS:
INDUSTRIAL LOUVERS, INC. MODEL SP537DC
DELANO, MN
MIAMI-DADE COUNTY PRODUCT CONTROL APPROVED

G-04 ALL CONCRETE SUBSTRATE SHALL BE MINIMUM 4000 PSI.

G-05 ALL GROUT FILLED CMU SUBSTRATE SHALL BE MINIMUM 1500 PSI.

G-06 ALL WOOD SUBSTRATE SHALL BE MINIMUM G = 0.55 DENSITY.

G-07 ALL METAL STUD SUBSTRATE SHALL BE MINIMUM 16 GAUGE Fy = 33 KSI.

G-08 ALL STRUCTURAL STEEL SUBSTRATE SHALL BE MINIMUM Fy = 46 KSI.

G-09 PANEL WIDTHS AND HEIGHTS ARE LIMITED AS SHOWN ON SHEETS 2 AND 3.

G-10 PANELS MAY BE HORIZONTALLY STACKED TO AN UNLIMITED WIDTH. VERTICAL STACKING MAY OCCUR PROVIDING A STRUCTURAL SUPPORT IS DESIGNED AND INSTALLED BY OTHERS TO WITHSTAND ALL LOADS IMPOSED BY THE LOUVERS. SINGLE NON-REINFORCED PANELS MAY BE STACKED VERTICALLY TO AN UNLIMITED HEIGHT.

G-11 SEPARATION OF DISSIMILAR METALS MUST BE MAINTAINED PER SECTION 2003.8.4 OF THE FBC.

G-12 THIS LOUVER TO BE INSTALLED IN A LOCATION WHERE THE ROOM BEHIND THE LOUVER IS DESIGNED TO DRAIN WATER PENETRATING INTO THE ROOM, AND THE ROOM WILL HOUSE WATER RESISTANT OR WATER PROOF EQUIPMENT, COMPONENTS, AND/OR SUPPLIES.

KEY NOTES:

K-01 SHELF ANGLES ATTACHED TO SURROUNDINGS PER SHELF ANGLE ANCHOR SCHEDULE. SHELF ANGLES WILL ONLY BE SUPPLIED IF THE PROJECT CONDITIONS REQUIRE IT.

K-10 4" LONG 3 1/2" X 6" X 3/8" CLIP ANGLES ATTACHED TO SURROUNDINGS PER MULLION ANCHOR SCHEDULE.

K-11 MULLION CLIP ANGLES ATTACHED TO VERTICAL CHANNELS W/ (4) 1/2" X 2 1/2" SS THRU BOLTS.

K-12 VERTICAL CHANNELS FASTENED TOGETHER W/ 1/4" X 1" SS THRU BOLTS AT 24" O.C.

K-13 1/4" X 1 1/4" GASKET TAPE APPLIED BETWEEN VERTICAL CHANNELS.

K-21 4" LONG 2" X 2" X 1/8" CLIP ANGLES ANCHORED TO SURROUNDINGS AT NO MORE THAN 12" O.C. PER JAMB ANCHOR SCHEDULE.

K-22 JAMB CLIP ANGLES ATTACHED TO SIDE FRAMES W/ (2) #12 X 1" SS SCREWS PER CLIP ANGLE.

K-31 VERTICAL CHANNELS ATTACHED TO EACH BLADE AND EACH BLADE BRACE W/ (1) #10 X 5/8" SS SCREW.

K-32 BOTTOM FRAME ATTACHED TO SIDE FRAMES W/ (2) #8 X 5/8" SS SCREWS PER SIDE FRAME.

K-33 BLADES ATTACHED TO SIDE FRAMES W/ (2) #8 X 5/8" SS SCREWS PER BLADE END.

K-34 TOP FRAME ATTACHED TO SIDE FRAMES W/ (2) #8 X 5/8" SS SCREWS PER SIDE FRAME.

K-41 BACKER ROD AND SEALANT APPLIED AROUND THE PERIMETER OF EACH LOUVER AFTER INSTALLATION.

SHELF ANGLE ANCHOR SCHEDULE (SEE DETAIL 2 SHEET 5)

ITEM	QUANTITY	DESCRIPTION	WHERE USED	SUBSTRATE	MIN. EMB.	MIN. EDGE DIST.	MIN. SPACING
33	1 PER MULLION END	9" LONG 4" X 6" X 1/2" SHELF ANGLE	0"-60" TALL LOUVERS	---	---	---	---
34	1 PER MULLION END	20" LONG 4" X 6" X 1/2" SHELF ANGLE	60"-108" TALL LOUVERS	---	---	---	---
35	1 PER MULLION END	21" LONG 4" X 6" X 1/2" SHELF ANGLE	108"-135" TALL LOUVERS	---	---	---	---
36	1 PER MULLION END	25 1/2" LONG 4" X 6" X 1/2" SHELF ANGLE	135"-154" TALL LOUVERS	---	---	---	---
SA11	3 PER SHELF ANGLE	1/2" DIA. S.S. HILTI KWIK BOLT III	ITEM 33	CONCRETE	3 1/4"	3 1/2"	3"
SA12	3 PER SHELF ANGLE	1/2" DIA. CARBON STEEL HILTI HUS EZ ANCHORS	ITEM 33	CONCRETE	3 1/4"	3 1/2"	3"
SA13	3 PER SHELF ANGLE	1/2" DIA. S.S. BOLT	ITEM 33	1/4" STEEL	---	1"	3" O.C.
SA21	3 PER SHELF ANGLE	1/2" DIA. S.S. HILTI KWIK BOLT III	ITEM 34	CONCRETE	3 1/4"	3 1/2"	8 1/2" O.C.
SA22	3 PER SHELF ANGLE	1/2" DIA. CARBON STEEL HILTI HUS EZ ANCHORS	ITEM 34	CONCRETE	3 1/4"	3 1/2"	8 1/2" O.C.
SA23	3 PER SHELF ANGLE	1/2" DIA. S.S. BOLT	ITEM 34	1/4" THICK STEEL	---	1"	8 1/2" O.C.
SA31	4 PER SHELF ANGLE	1/2" DIA. CARBON STEEL HILTI HUS EZ ANCHORS	ITEM 35	CONCRETE	4 1/4"	3 1/2"	6" O.C.
SA32	4 PER SHELF ANGLE	1/2" DIA. S.S. BOLT	ITEM 35	1/4" THICK STEEL	---	1"	6" O.C.
SA41	4 PER SHELF ANGLE	1/2" DIA. CARBON STEEL HILTI HUS EZ ANCHORS	ITEM 36	CONCRETE	4 1/4"	3 1/2"	7 1/2" O.C.
SA42	4 PER SHELF ANGLE	1/2" DIA. S.S. BOLT	ITEM 36	1/4" THICK STEEL	---	1"	7 1/2" O.C.

MULLION ANCHOR SCHEDULE

ITEM	QUANTITY	DESCRIPTION	SUBSTRATE	MIN. EMB.	MIN. EDGE DIST.	MIN. SPACING
32	2 PER MULLION END	4" LONG 3 1/2" X 6" X 3/8" ANGLE	---	---	---	---
MA11	1 PER CLIP	1/2" DIA. S.S. THREADED ROD W/ HILTI HIT-HY 150 MAX	CONCRETE	3"	4 3/4"	5 1/2"
MA12	1 PER CLIP	1/2" DIA. S.S. HILTI KWIK BOLT III	CONCRETE	3 1/4"	4 3/4"	5 1/2"
MA13	1 PER CLIP	1/2" DIA. S.S. BOLT	1/4" THICK STEEL	---	1"	5 1/2"
MA14	1 PER CLIP	1/2" DIA. S.S. LAGBOLT	WOOD	5 1/2"	2"	5 1/2"

JAMB ANCHOR SCHEDULE

ITEM	QUANTITY	DESCRIPTION	SUBSTRATE	MIN. EMB.	MIN. EDGE DIST.	MIN. SPACING
31	1	4" LONG 2" X 2" X 1/8" ANGLE	---	---	---	---
JA11	1 PER CLIP	1/4" DIA. S.S. HILTI KWIK BOLT III	CONCRETE	1 3/4"	3"	4 1/2" O.C.
JA12	1 PER CLIP	1/4" DIA. S.S. HILTI KWIK BOLT III	CONC. BLOCK	2"	4"	8" O.C.
JA13	2 PER CLIP	1/4" DIA. S.S. SELF-DRILLING SCREW	3/16" THICK STEEL	---	1/2"	1" O.C.
JA14	3 PER CLIP	1/4" DIA. S.S. SELF-DRILLING SCREW	16 GA. STL STUDS	---	1/2"	1" O.C.
JA15	2 PER CLIP	1/4" DIA. S.S. LAG BOLT	WOOD	4"	2"	2" O.C.

PARTS LIST (SEE SHEETS 9 - 11)

ITEM	DESCRIPTION	PART NUMBER	MATERIAL SPECIFICATIONS
01	LOUVER BOTTOM FRAME	FRM1384-M	6063-T6 ALUM. 0.081" THICK
02	LOUVER SIDE FRAME	FRM1386-M	6063-T6 ALUM. 0.081" THICK
03	LOUVER TOP FRAME	FRM1385-M	6063-T6 ALUM. 0.081" THICK
04	LOUVER BLADE	BLD1400-M	6063-T6 ALUM. 0.063" THICK
11	BLADE BRACE, BOTTOM BLADE, 1" LONG	HARPUN9160	6063-T6 ALUM. 0.156" THICK
12	BLADE BRACE, TYPICAL, 2" LONG	HARPUN9164	6063-T6 ALUM. 0.156" THICK
21	1" X 5" X 2" X 1/8" CHANNEL	CHN1046	6061-T6 ALUM.
22	1" X 6 5/8" X 2" X 1/8" CHANNEL	CHN1050	6061-T6 ALUM.
23	1" X 7" X 2" X 3/16" CHANNEL	CHN1060	6061-T6 ALUM.
31	4" LONG 2" X 2" X 1/8" CLIP ANGLE	HAR9335	6061-T6 ALUM.
32	4" LONG 3 1/2" X 6" X 3/8" CLIP ANGLE	HAR9365	6061-T6 ALUM.
33	9" LONG 4" X 6" X 1/2" SHELF ANGLE	---	6061-T6 ALUM.
34	20" LONG 4" X 6" X 1/2" SHELF ANGLE	---	6061-T6 ALUM.
35	21" LONG 4" X 6" X 1/2" SHELF ANGLE	---	6061-T6 ALUM.
36	25 1/2" LONG 4" X 6" X 1/2" SHELF ANGLE	---	6061-T6 ALUM.
41	#8 X 5/8" SD PH SM SCREW	FAS5042	18-8 SS CW TYPE-A
42	#10 X 5/8" SD PH SM SCREW	FAS5096	18-8 SS CW TYPE-A
43	#12 X 1" SL HWH SM SCREW	FAS5135	18-8 SS CW TYPE-A
44	1/4"-20 X 1" HH BOLT W/ WASHERS AND NUT	FAS5155	18-8 SS CW CAP SCREW
45	1/2"-13 X 2" HH BOLT W/ WASHERS AND NUT	FAS5185	18-8 SS CW CAP SCREW
46	1/2"-13 X 2 1/2" HH BOLT W/ WASHERS AND NUT	FAS5189	18-8 SS CW CAP SCREW

PRODUCT REVISED
as complying with the Florida Building Code
Acceptance No 14-0908.22
Expiration Date 07/10/2018
By _____
Miami Dade Product Control

RICE ENGINEERING
105 School Creek Trail
Luxemburg, WI 54217
Phone 920.845 1042
Fax 920.845 1048
www.rice-inc.com

Florida Firm No F-01000005061
Certificate of Authorization: #9090
L. David Rice
Registration No: 50923

INDUSTRIAL LOUVERS INC.
ILinfo@industrialLouvers.com
www.IndustrialLouvers.com
Delano, Minnesota
763-972-2981

SP537DC
5" Deep Storm Performance Dade County Approved Louver

Revisions

No.	By	Description	Date
1	DG	UPDATED MULLION SPANS AND MULLION ANCHOR DESIGN	06/19/13
2	DG	UPDATED PER ENGINEERING CALCULATIONS	07/09/13
3	DG	UPDATED PER COMPLIANCE OFFICE MARKUPS	09/04/13
4	DG	UPDATED PER REVISED CALCULATIONS	09/11/13
5	DG	UPDATED PER COMPLIANCE OFFICE MARKUPS	10/11/13
6	DG	UPDATED PER 2014 FBC	04/15/14

Date: 3/21/13
Drawn By: DG
Checked By: DM

Drawing No. RD1032

Compliance Office Stamp
L. DAVID RICE
LICENSE
No. 50923
STATE OF FLORIDA
PROFESSIONAL ENGINEER

Sheet No.
1 Of 11

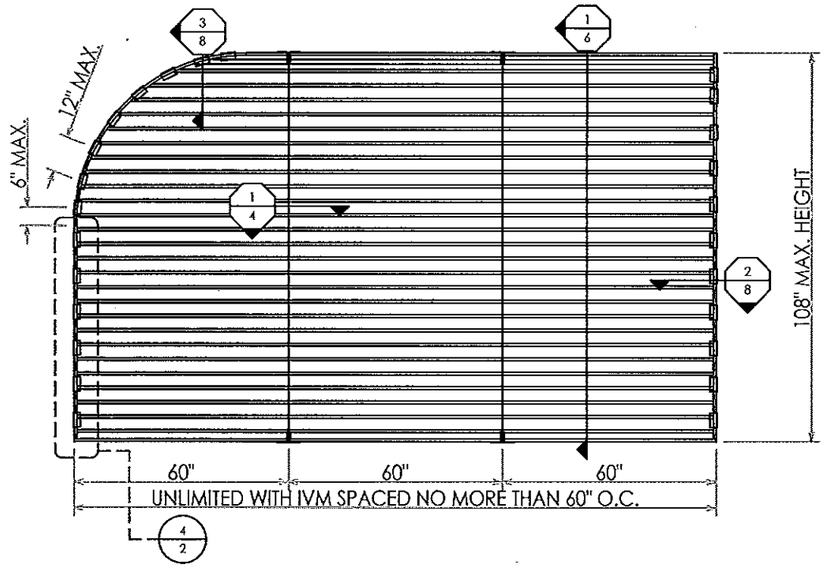

SPECIMEN #1

120 PSF DESIGN PRESSURE

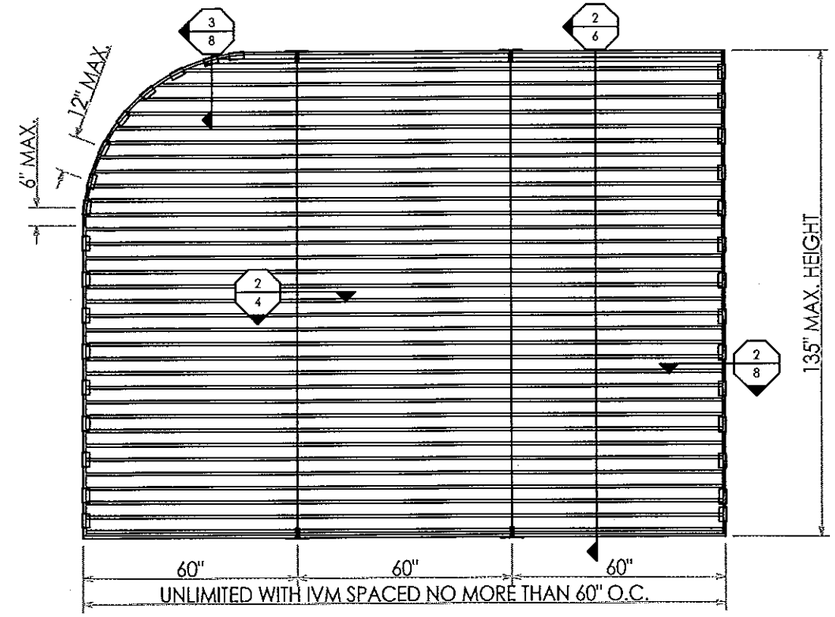

SPECIMEN #2

120 PSF DESIGN PRESSURE

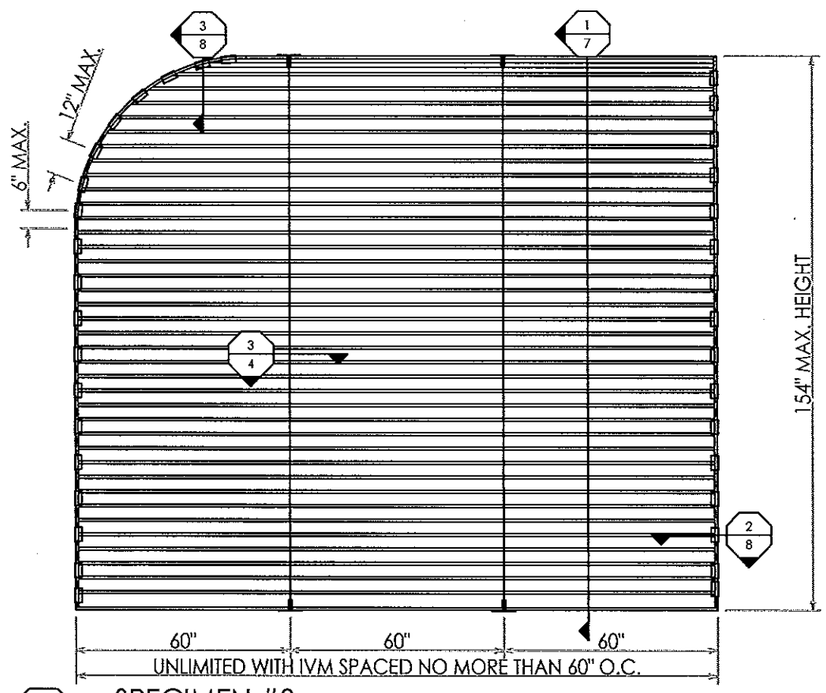

SPECIMEN #3

120 PSF DESIGN PRESSURE

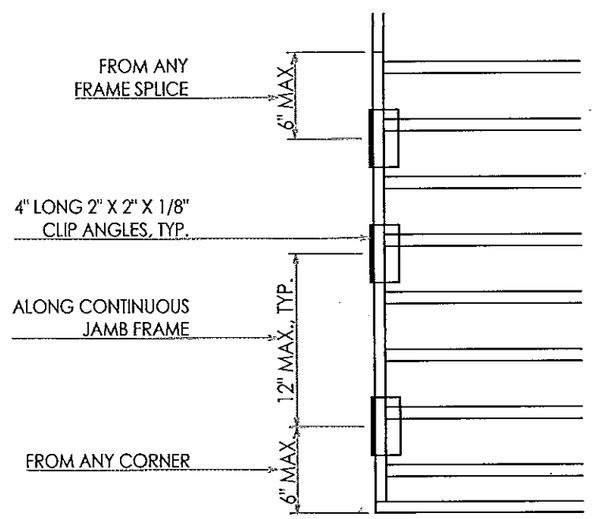

JAMB ANCHOR LOCATIONS

4/2

TYPICAL FOR ALL SPECIMENS

PRODUCT REVISED
as complying with the Florida Building Code
Acceptance No 14-0908.22
Expiration Date 09/10/2018
By
Miami Dade Product Control

RICE ENGINEERING
105 School Creek Trail
Luxemburg, WI 54217
Phone 920.845 1042
Fax 920.845.1048
www.rice-inc.com

Florida Firm No F-01000005061
Certificate of Authorization: #9090
L David Rice
Registration No: 50923

INDUSTRIAL LOUVERS INC.
iLinfo@industrialLouvers.com
www.industrialLouvers.com
Delano, Minnesota
763-972-2981

SP537DC

5' Deep Storm Performance Dade County Approved Louver

Revisions

No.	By	Description	Date
1	DG	UPDATED MULLION SPANS AND MULLION ANCHOR DESIGN	06/19/13
2	DG	UPDATED PER ENGINEERING CALCULATIONS	07/09/13
3	DG	UPDATED PER COMPLIANCE OFFICE MARKUPS	09/04/13
4	DG	UPDATED PER REVISED CALCULATIONS	09/11/13
5	DG	UPDATED PER COMPLIANCE OFFICE MARKUPS	10/11/13
6	DG	UPDATED PER 2014 FBC	04/15/14

Date: 3/21/13
Drawn By: DG
Checked By: DM

Drawing No. RD1032

Compliance Office Stamp

L. DAVID RICE
LICENSE
No. 50923
STATE OF FLORIDA
PROFESSIONAL ENGINEER

Sheet No.
2 Of 11

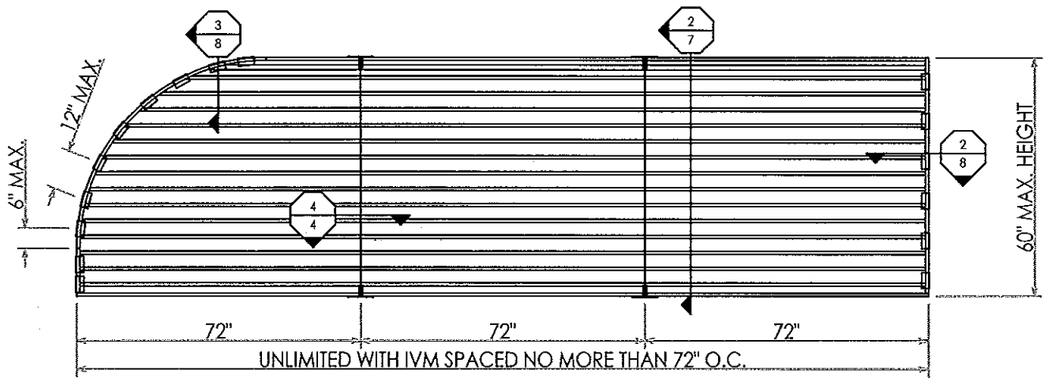

SPECIMEN #4

100 PSF DESIGN PRESSURE

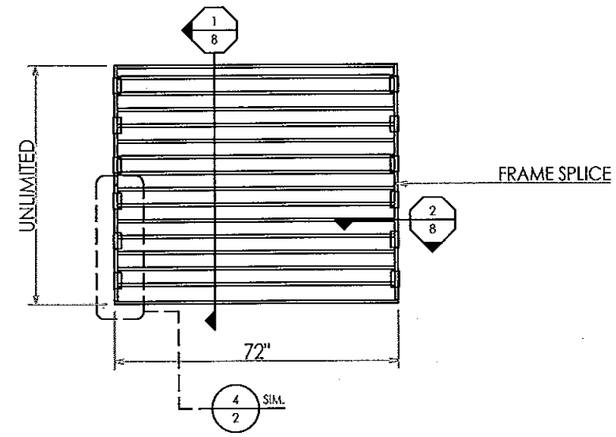

SPECIMEN #5

120 PSF DESIGN PRESSURE

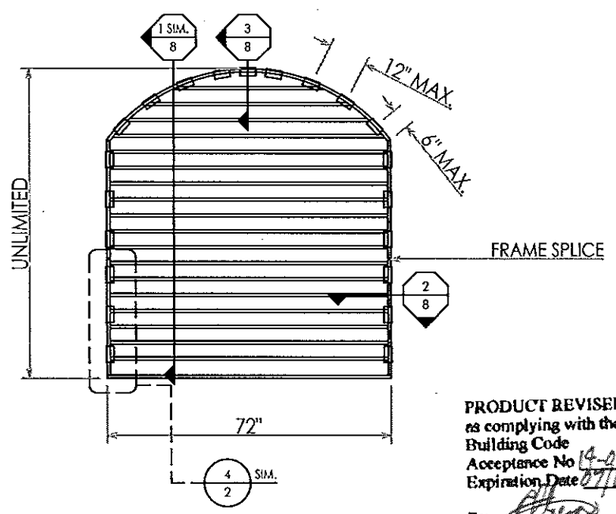

PRODUCT REVISED
as complying with the Florida
Building Code
Acceptance No 14-0908.22
Expiration Date 07/10/2018
By
Miami Dade Product Control

SPECIMEN #6

120 PSF DESIGN PRESSURE

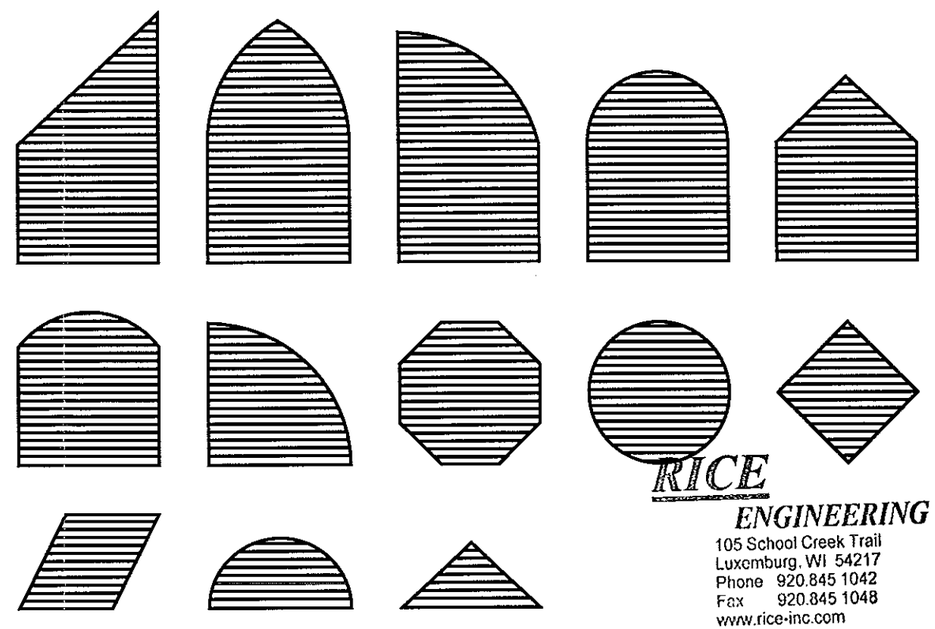

APPROVED SPECIAL SHAPES

NOT TO SCALE

RICE ENGINEERING
105 School Creek Trail
Luxemburg, WI 54217
Phone 920.845 1042
Fax 920.845 1048
www.rice-inc.com

Florida Firm No F-01000005061
Certificate of Authorization: #9090
L. David Rice
Registration No: 50923

INDUSTRIAL LOUVERS INC.
info@industrialLouvers.com
www.IndustrialLouvers.com
Delano, Minnesota
763-972-2981

SP537DC

5" Deep Storm Performance Dade County Approved Louver

Revisions

No.	By	Description	Date
1	DG	UPDATED MULLION SPANS AND MULLION ANCHOR DESIGN	06/19/13
2	DG	UPDATED PER ENGINEERING CALCULATIONS	07/09/13
3	DG	UPDATED PER COMPLIANCE OFFICE MARKUPS	09/04/13
4	DG	UPDATED PER REVISED CALCULATIONS	09/11/13
5	DG	UPDATED PER COMPLIANCE OFFICE MARKUPS	10/11/13
6	DG	UPDATED PER 2014 FBC	04/15/14

Date: 3/21/13
Drawn By: DG
Checked By: DM

Drawing No. RD1032

Compliance Office Stamp

L. DAVID RICE
LICENSE
No. 50923
STATE OF FLORIDA
PROFESSIONAL ENGINEER

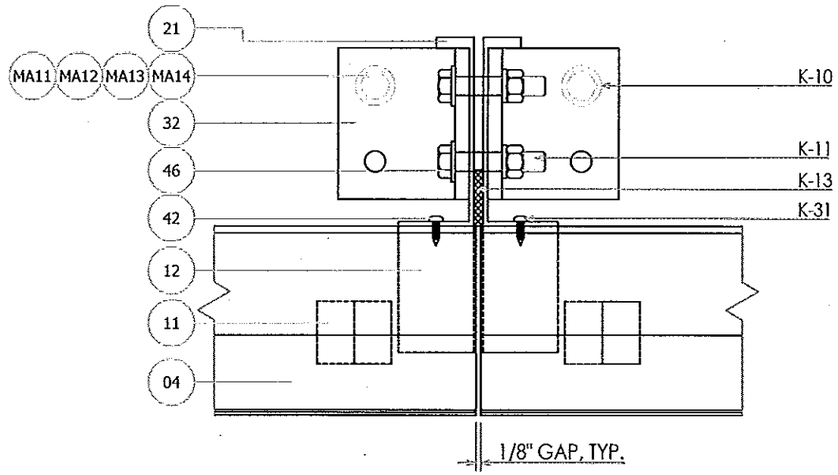

1/4 MULLION #1, 5" CHANNEL

108" MAX SPAN

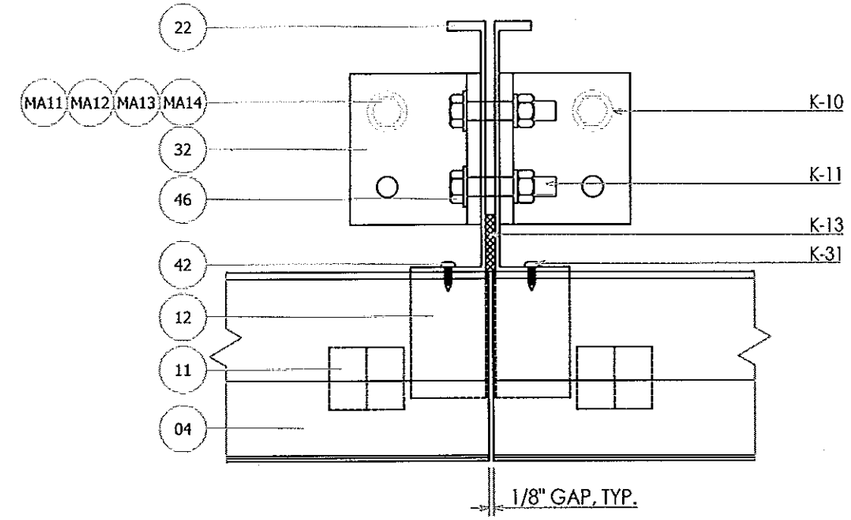

2/4 MULLION #2, 6 5/8" CHANNEL

135" MAX SPAN

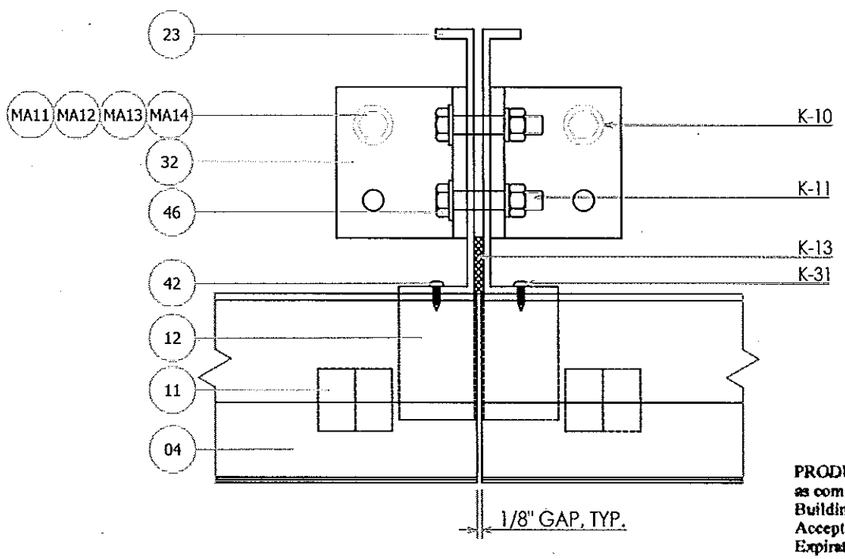

3/4 MULLION #3, 7" CHANNEL

154" MAX SPAN

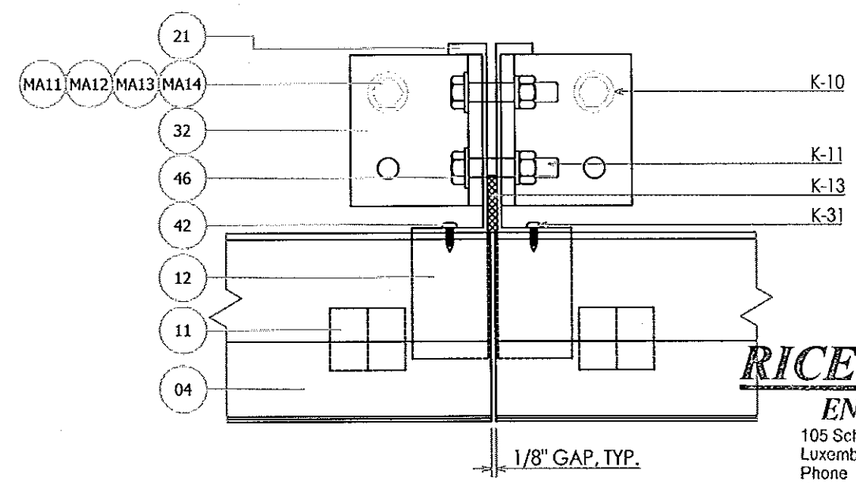

4/4 MULLION #4, 5" CHANNEL

60" MAX SPAN

PRODUCT REVISED
as complying with the Florida
Building Code
Acceptance No 14-0908.22
Expiration Date 07/10/2018
By
Miami-Dade Product Control

RICE
ENGINEERING
105 School Creek Trail
Luxemburg, WI 54217
Phone 920.845 1042
Fax 920.845 1048
www.rice-inc.com

Florida Firm No. F-01000005061
Certificate of Authorization: #9090
L. David Rice
Registration No: 50923

iLinfo@industriallouvers.com
www.Industriallouvers.com
Delano, Minnesota
763-972-2981

INDUSTRIAL LOUVERS INC.

SP537DC

5" Deep Storm Performance Dade County Approved Louver

Revisions

No.	By	Description	Date
1	DG	UPDATED MULLION SPANS AND MULLION ANCHOR DESIGN	06/19/13
2	DG	UPDATED PER ENGINEERING CALCULATIONS	07/09/13
3	DG	UPDATED PER COMPLIANCE OFFICE MARKUPS	09/04/13
4	DG	UPDATED PER REVISED CALCULATIONS	09/11/13
5	DG	UPDATED PER COMPLIANCE OFFICE MARKUPS	10/11/13
6	DG	UPDATED PER 2014 FBC	04/15/14

Date: 3/21/13
Drawn By: DG
Checked By: DM
Drawing No. RD1032

Compliance Office Stamp

L. DAVID RICE
LICENSE
No. 50923
STATE OF FLORIDA
PROFESSIONAL ENGINEER

Sheet No.
4 Of 11

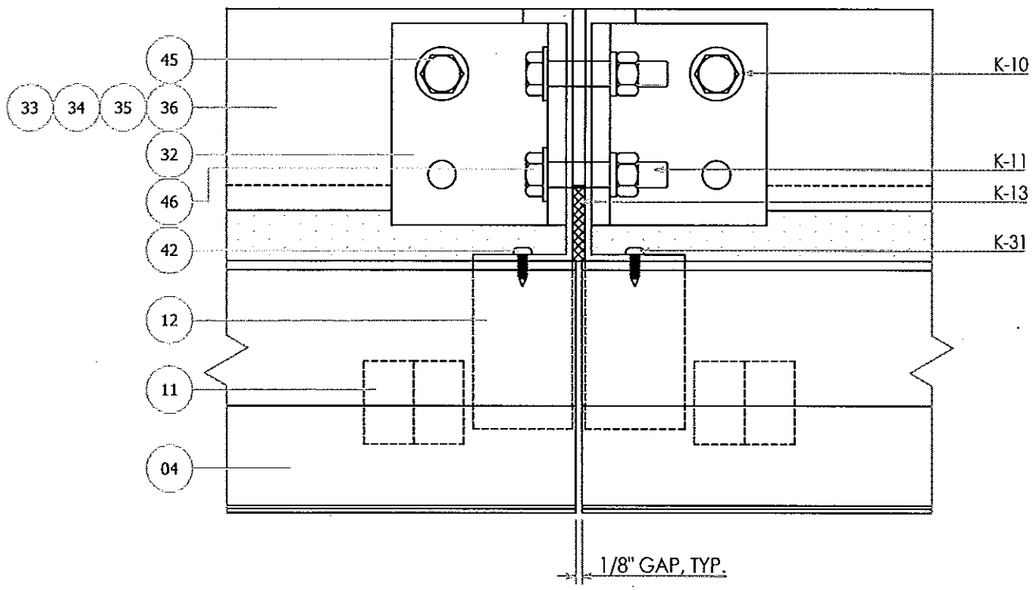

1/5 PLAN DETAIL @ SHELF ANGLE

ALL MULLION TYPES SIMILAR

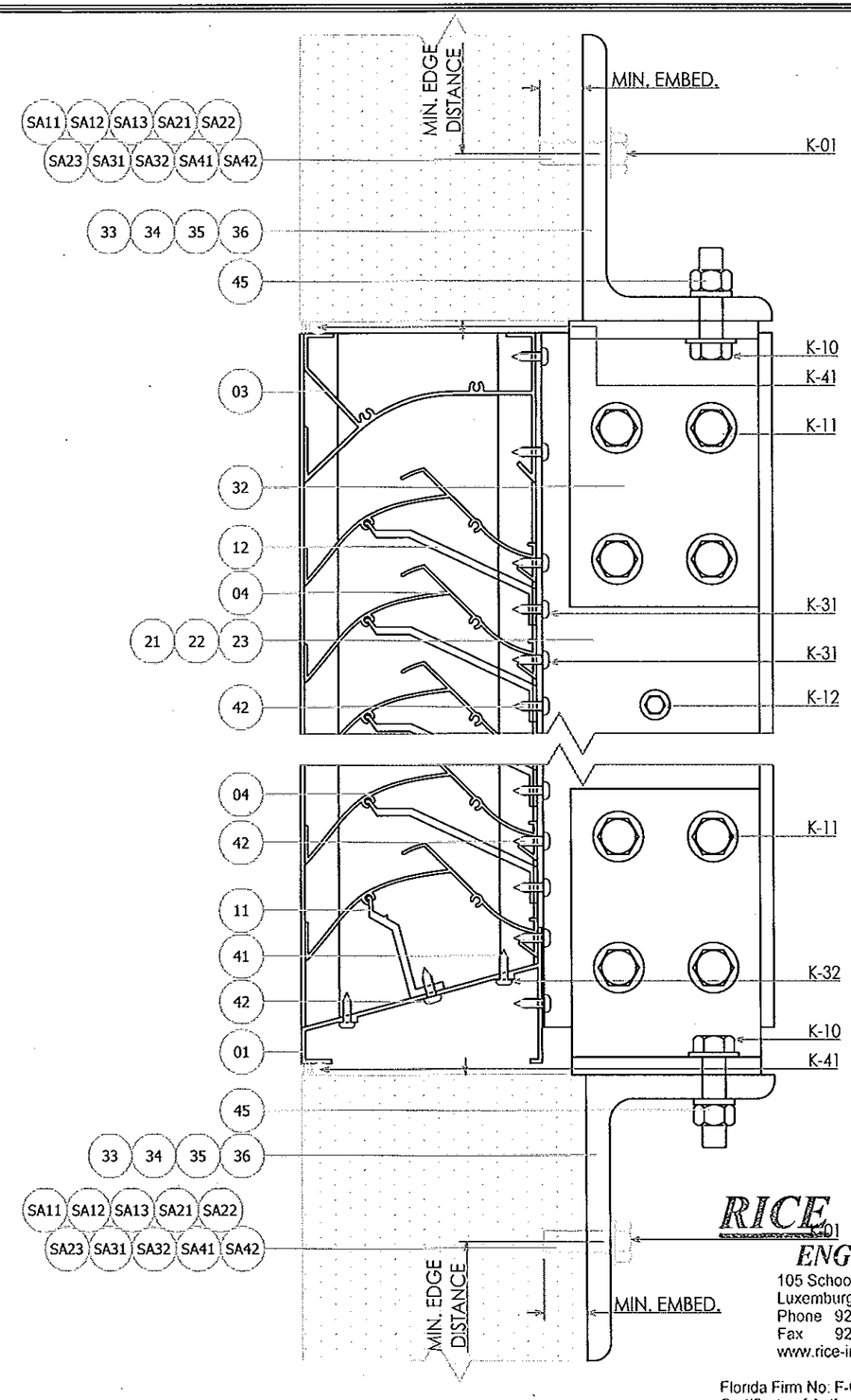

2/5 VERTICAL SECTION W/ SHELF ANGLE

ALL MULLION TYPES SIMILAR

PRODUCT REVISED
as complying with the Florida
Building Code
Acceptance No 14-0908.22
Expiration Date 07/01/2018

By _____
Miami Dade Product Control

RICE ENGINEERING
105 School Creek Trail
Luxemburg, WI 54217
Phone 920.845 1042
Fax 920.845 1048
www.rice-inc.com

Florida Firm No: F-01000005061
Certificate of Authorization: #9090
L David Rice
Registration No: 50923

iLinfo@industrialLouvers.com
www.IndustrialLouvers.com
Delano, Minnesota
763-972-2981

INDUSTRIAL LOUVERS INC.

SP537DC

5' Deep Storm Performance Dade County Approved Louver

Revisions

No.	By	Description	Date
1	DG	UPDATED MULLION SPANS AND MULLION ANCHOR DESIGN	06/19/13
2	DG	UPDATED PER ENGINEERING CALCULATIONS	07/09/13
3	DG	UPDATED PER COMPLIANCE OFFICE MARKUPS	09/04/13
4	DG	UPDATED PER REVISED CALCULATIONS	09/11/13
5	DG	UPDATED PER COMPLIANCE OFFICE MARKUPS	10/11/13
6	DG	UPDATED PER 2014 FBC	04/15/14

Date: 3/21/13
Drawn By: DG
Checked By: DM

Drawing No. RD1032

Compliance Office Stamp
L. DAVID RICE
LICENSE
No. 50923
STATE OF FLORIDA
PROFESSIONAL ENGINEER

Sheet No.
5 Of 11

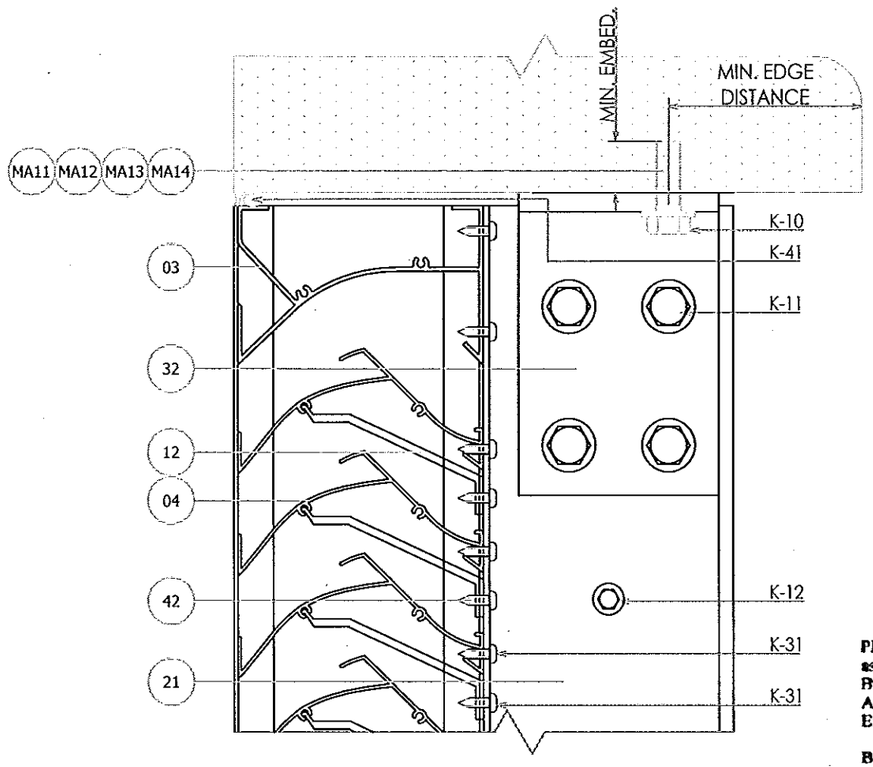

1/6 VERTICAL SECTION SPECIMEN #1

@ IVM W/ 5" CHANNEL SUPPORTS

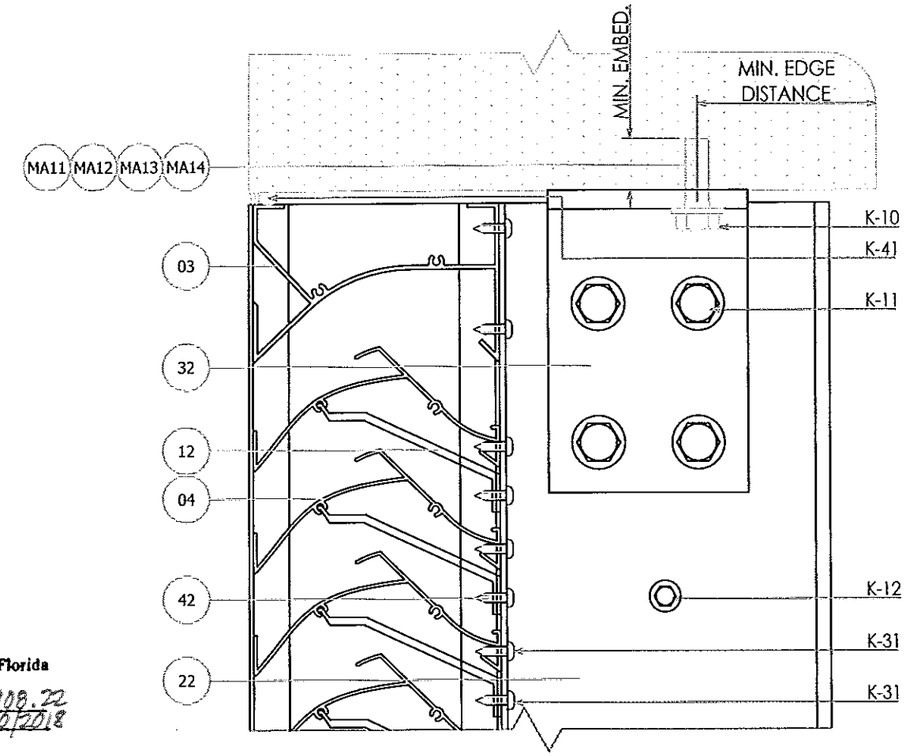

2/6 VERTICAL SECTION SPECIMEN #2

@ IVM W/ 6 5/8" CHANNEL SUPPORTS

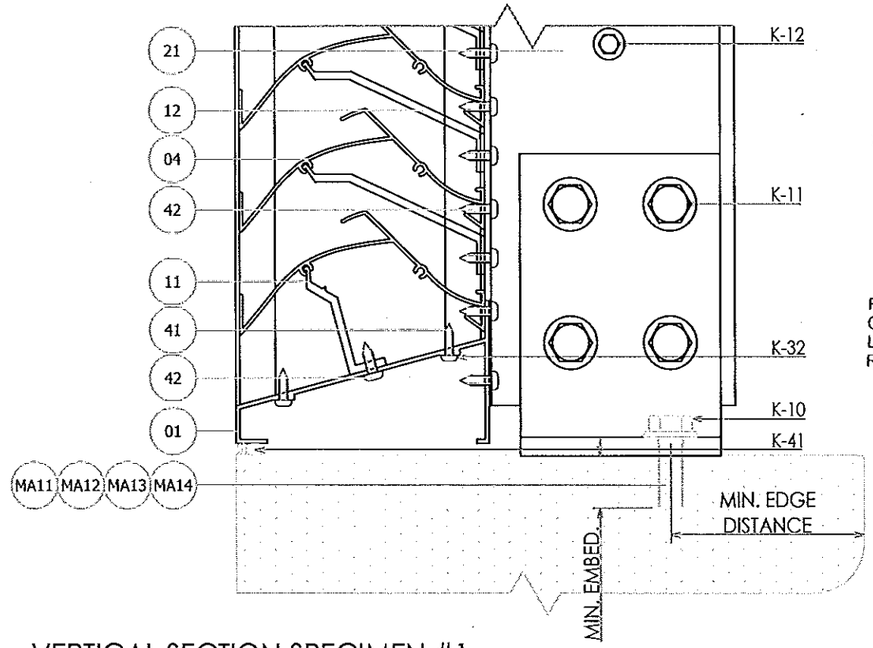

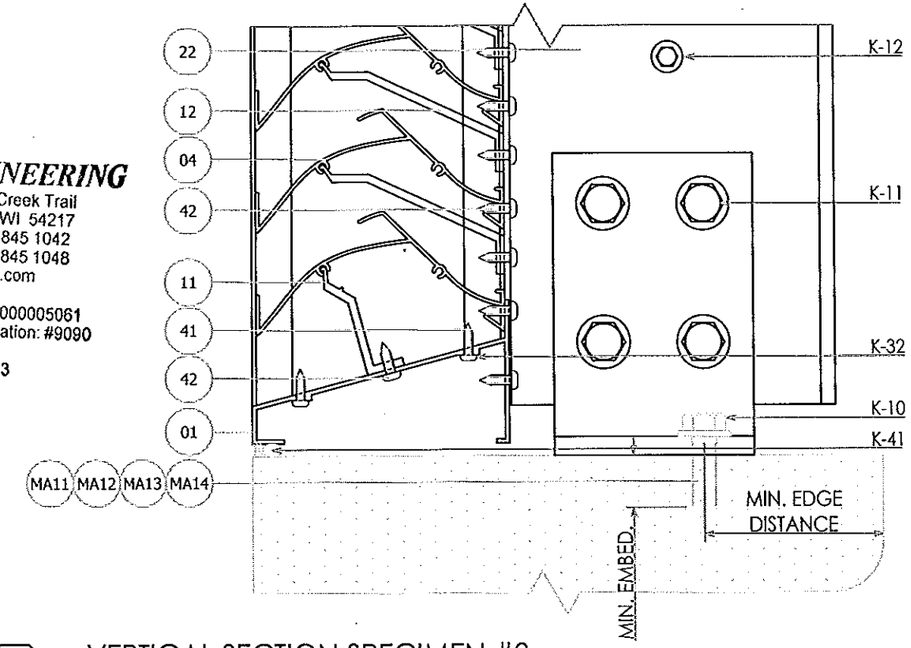

PRODUCT REVISED
as complying with the Florida Building Code
Acceptance No 14-0908.22
Expiration Date 07/10/2018
By _____
Miami Dade Product Control

RICE
ENGINEERING
105 School Creek Trail
Luxemburg, WI 54217
Phone 920.845 1042
Fax 920.845 1048
www.rice-inc.com

Florida Firm No F-01000005061
Certificate of Authorization: #9090
L David Rice
Registration No: 50923

iLinfo@industrialLouvers.com
www.industrialLouvers.com
Delano, Minnesota
763-972-2981

INDUSTRIAL LOUVERS INC.

SP537DC

5" Deep Storm Performance Dade County Approved Louver

Revisions

No.	By	Description	Date
1	DG	UPDATED MULLION SPANS AND MULLION ANCHOR DESIGN	06/19/13
2	DG	UPDATED PER ENGINEERING CALCULATIONS	07/09/13
3	DG	UPDATED PER COMPLIANCE OFFICE MARKUPS	09/04/13
4	DG	UPDATED PER REVISED CALCULATIONS	09/11/13
5	DG	UPDATED PER COMPLIANCE OFFICE MARKUPS	10/11/13
6	DG	UPDATED PER 2014 FBC	04/15/14

Date: 3/21/13
Drawn By: DG
Checked By: DM
Drawing No. RD1032

Compliance Office Stamp

L. DAVID RICE
LICENSE
No. 50923
STATE OF FLORIDA
PROFESSIONAL ENGINEER

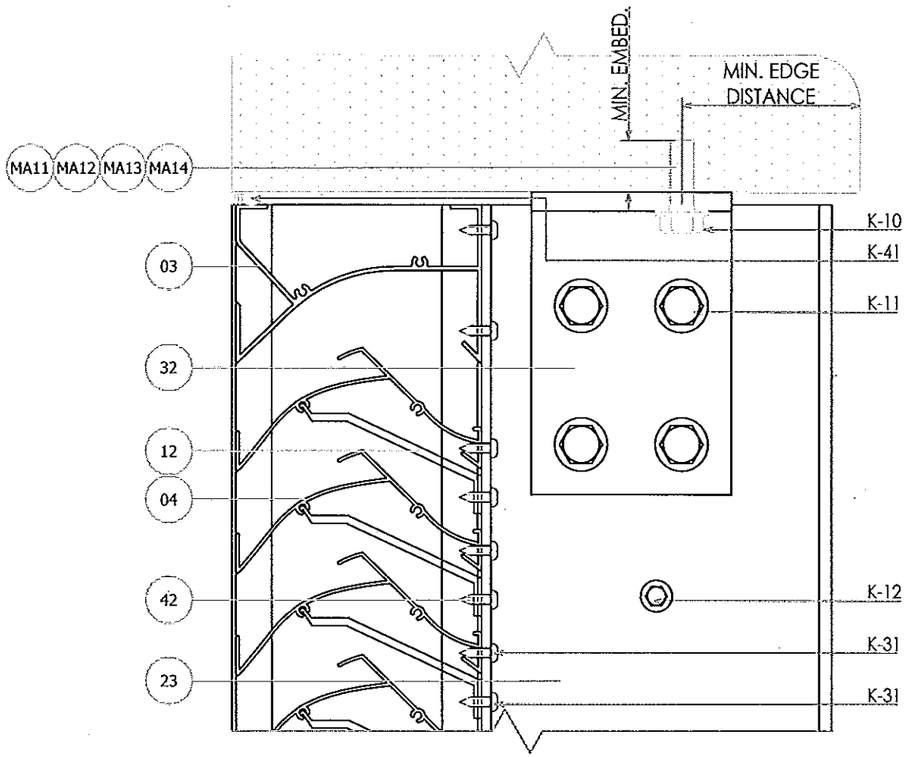

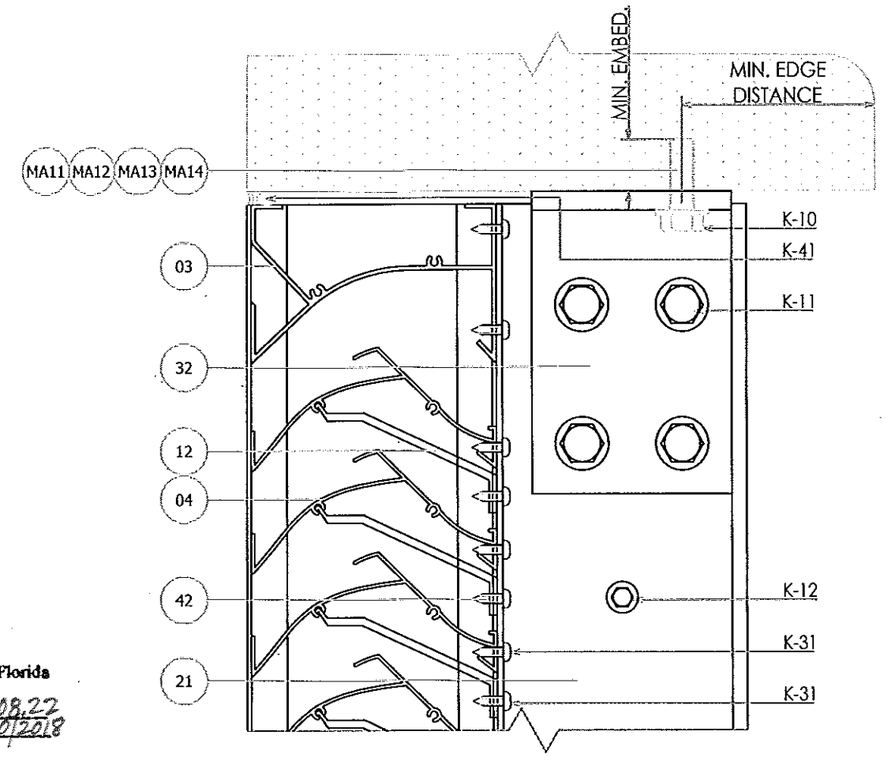

PRODUCT REVISED
as complying with the Florida
Building Code
Acceptance No 14-0908.22
Expiration Date 07/10/2018
By
Miami Dade Product Control

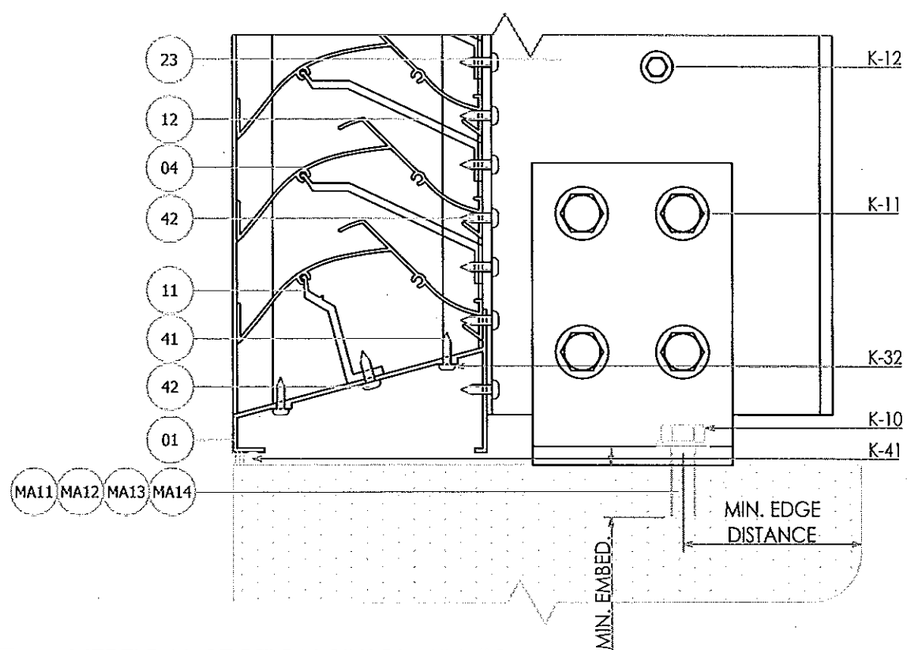

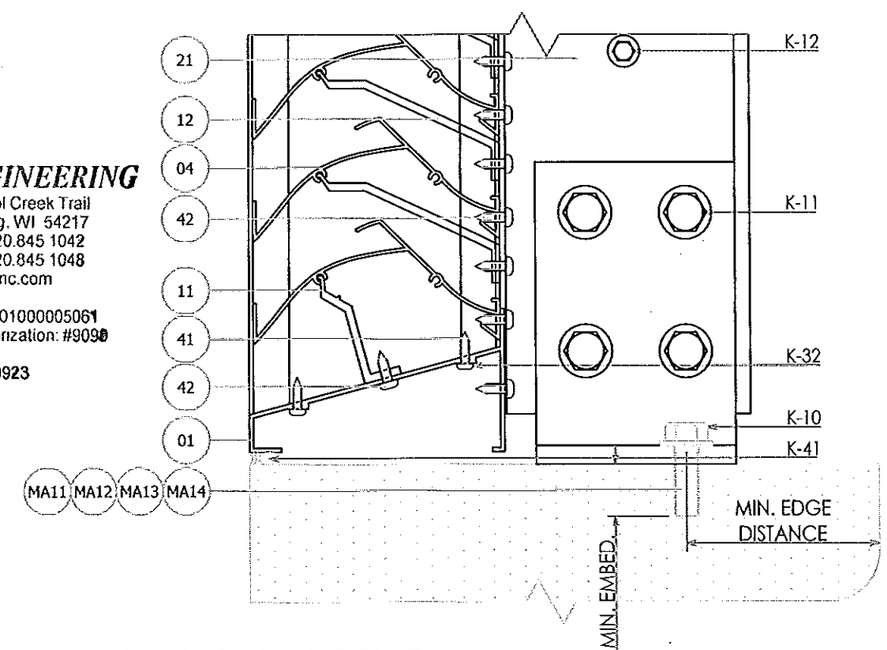

RICE ENGINEERING
105 School Creek Trail
Luxemburg, WI 54217
Phone 920.845 1042
Fax 920.845 1048
www.rice-inc.com

Florida Firm No F-01000005061
Certificate of Authorization: #9090
L. David Rice
Registration No: 50923

1/7 VERTICAL SECTION SPECIMEN #3
@ IVM W/ 7" CHANNEL SUPPORTS

2/7 VERTICAL SECTION SPECIMEN #4
@ IVM W/ 5" CHANNEL SUPPORTS

info@industriallouvers.com
www.industriallouvers.com
Delano, Minnesota
763-972-2981
INDUSTRIAL LOUVERS INC.

SP537DC

5" Deep Storm Performance Dade County Approved Louver

Revisions

No.	By	Description	Date
1	DG	UPDATED MULLION SPANS AND MULLION ANCHOR DESIGN	06/19/13
2	DG	UPDATED PER ENGINEERING CALCULATIONS	07/09/13
3	DG	UPDATED PER COMPLIANCE OFFICE MARKUPS	09/04/13
4	DG	UPDATED PER REVISED CALCULATIONS	09/11/13
5	DG	UPDATED PER COMPLIANCE OFFICE MARKUPS	10/11/13
6	DG	UPDATED PER 2014 FBC	04/15/14

Date: 3/21/13
Drawn By: DG
Checked By: DM

Drawing No. RD1032

Compliance Office Stamp

L. DAVID RICE
LICENSE
No. 50923
STATE OF FLORIDA
PROFESSIONAL ENGINEER

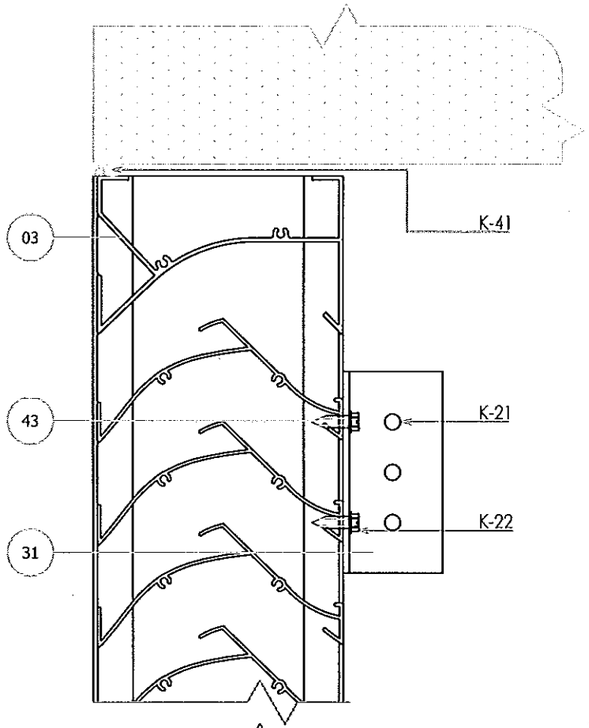

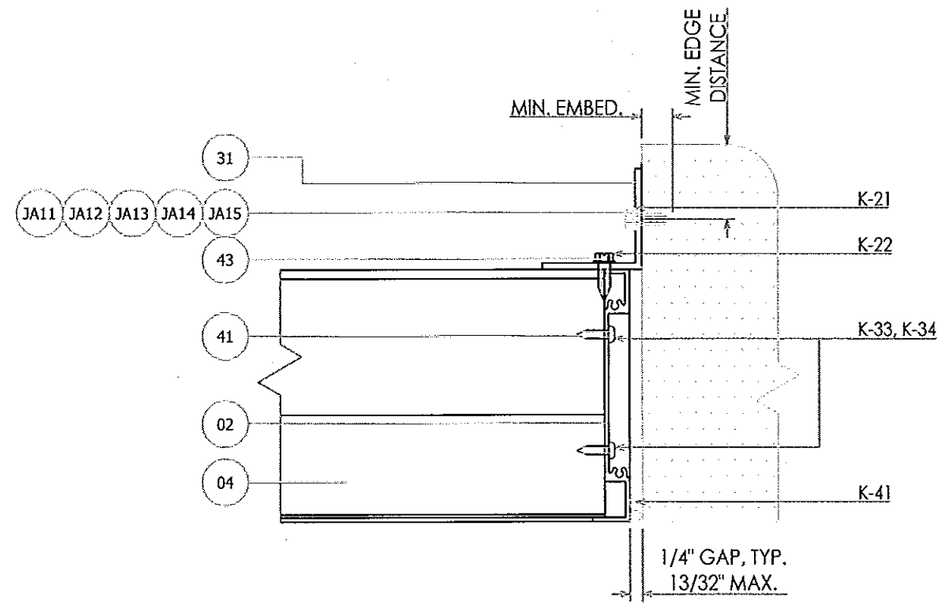

2/8 JAMB PLAN DETAIL

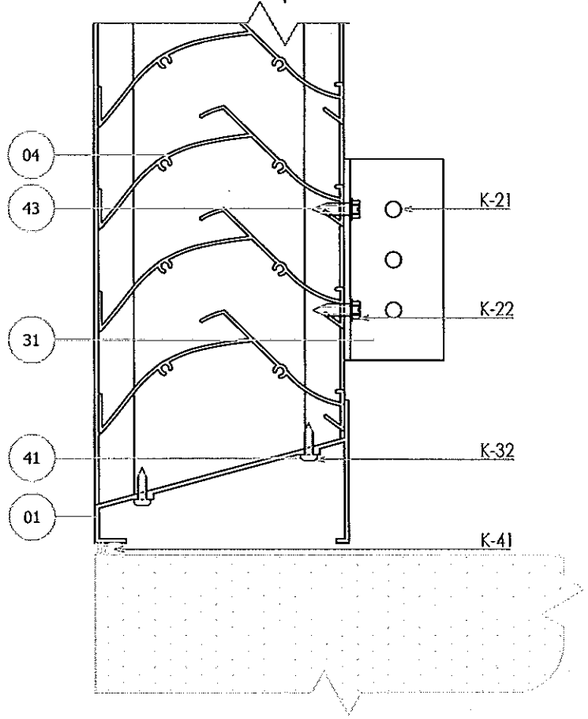

1/8 VERTICAL SECTION SPECIMEN #5

SIMILAR AT ALL JAMBS

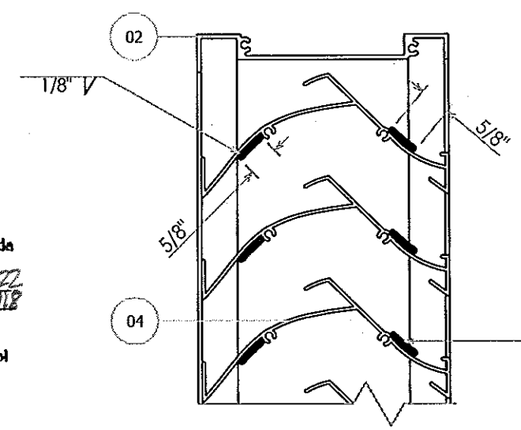

3/8 SECTION @ SHAPED LOUVER

NOTE:
LOUVER BLADES, TOP FRAME, AND/OR BOTTOM FRAME MUST BE WELDED TO JAMB FRAMES IN LIEU OF MECHANICAL FASTENERS AT ALL JAMBS THAT ARE NOT NORMAL TO THE BLADE AXIS.

PRODUCT REVISED
as complying with the Florida Building Code
Acceptance No 14-0908.22
Expiration Date 12/10/2018
By
Miami Dade Product Control

RICE ENGINEERING
105 School Creek Trail
Luxemburg, WI 54217
Phone 920.845 1042
Fax 920.845 1048
www.rice-inc.com

Florida Firm No. F-01000005061
Certificate of Authorization: #9090
L David Rice
Registration No: 50923

iLinfo@industriallouvers.com
www.industriallouvers.com
Delano, Minnesota
763-972-2981

INDUSTRIAL LOUVERS INC.

SP537DC

5' Deep Storm Performance Dade County Approved Louver

Revisions

No.	By	Description	Date
1	DG	UPDATED MULLION SPANS AND MULLION ANCHOR DESIGN	06/19/13
2	DG	UPDATED PER ENGINEERING CALCULATIONS	07/09/13
3	DG	UPDATED PER COMPLIANCE OFFICE MARKUPS	09/04/13
4	DG	UPDATED PER REVISED CALCULATIONS	09/11/13
5	DG	UPDATED PER COMPLIANCE OFFICE MARKUPS	10/11/13
6	DG	UPDATED PER 2014 FBC	04/15/14

Date: 3/21/13
Drawn By: DG
Checked By: DM
Drawing No. RD1032

Compliance Office Stamp

L. DAVID RICE
LICENSE
No. 50923
STATE OF FLORIDA
PROFESSIONAL ENGINEER

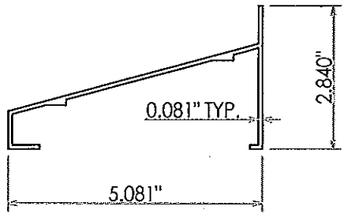

01 LOUVER BOTTOM FRAME

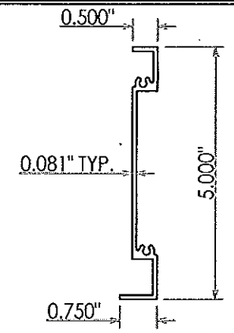

02 LOUVER SIDE FRAME

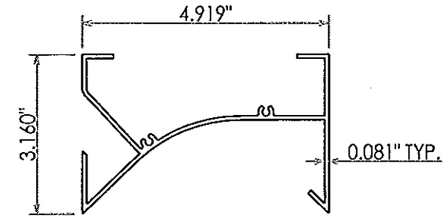

03 LOUVER TOP FRAME

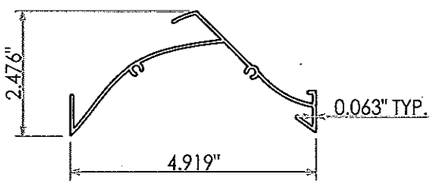

04 LOUVER BLADE

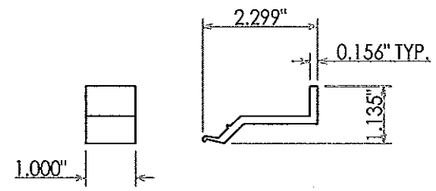

11 BLADE BRACE, BOTTOM BLADE, 1" LONG

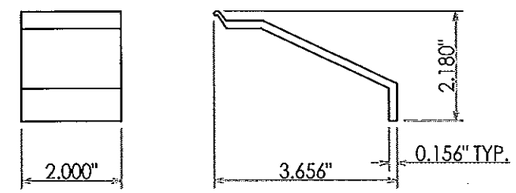

12 BLADE BRACE, TYPICAL, 2" LONG

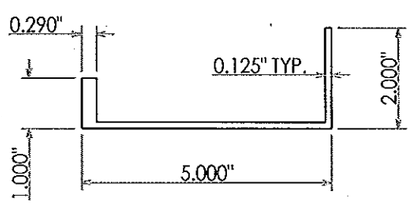

21 1" X 5" X 2" X 1/8" CHANCEL

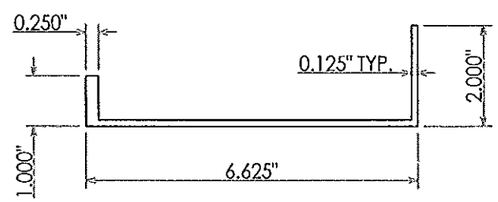

22 1" X 6 5/8" X 2" X 1/8" CHANCEL

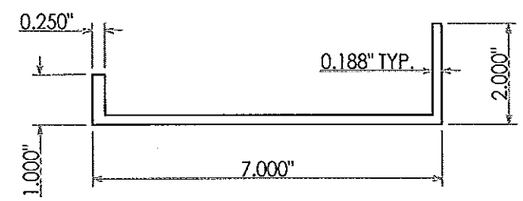

23 1" X 7" X 2" X 3/16" CHANCEL

PRODUCT REVISED
as complying with the Florida
Building Code
Acceptance No 14.0908.22
Expiration Date 07/10/2018
By
Miami Dade Product Control

RICE
ENGINEERING
105 School Creek Trail
Luxemburg, WI 54217
Phone 920.845 1042
Fax 920.845 1048
www.rice-inc.com

Florida Firm No F-01000005061
Certificate of Authorization: #9090
L David Rice
Registration No: 50923

INDUSTRIAL LOUVERS INC.
iLouvers@industrialLouvers.com
www.industrialLouvers.com
Delano, Minnesota
763-972-2981

SP537DC

5" Deep Storm Performance Dade County Approved Louver

Revisions

No.	By	Description	Date
1	DG	UPDATED MULLION SPANS AND MULLION ANCHOR DESIGN	06/19/13
2	DG	UPDATED PER ENGINEERING CALCULATIONS	07/09/13
3	DG	UPDATED PER COMPLIANCE OFFICE MARKUPS	09/04/13
4	DG	UPDATED PER REVISED CALCULATIONS	09/11/13
5	DG	UPDATED PER COMPLIANCE OFFICE MARKUPS	10/11/13
6	DG	UPDATED PER 2014 FBC	04/15/14

Date: 3/21/13
Drawn By: DG
Checked By: DM
Drawing No. RD1032

Compliance Office Stamp

L. DAVID RICE
LICENSE
No. 50923
STATE OF FLORIDA
PROFESSIONAL ENGINEER

Sheet No.
9 Of 11

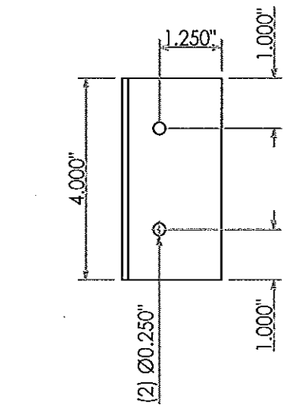

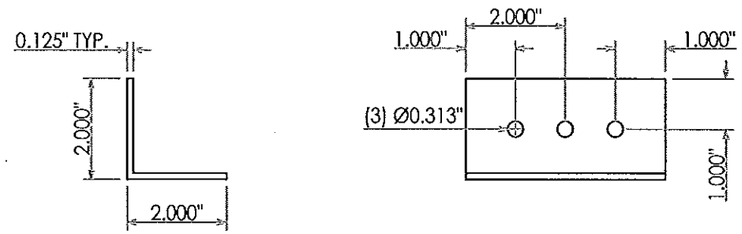

31 4" LONG 2" X 2" X 1/8" CLIP ANGLE

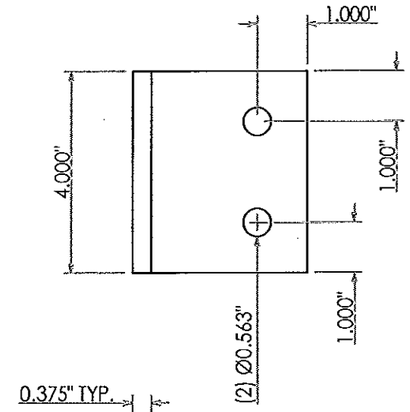

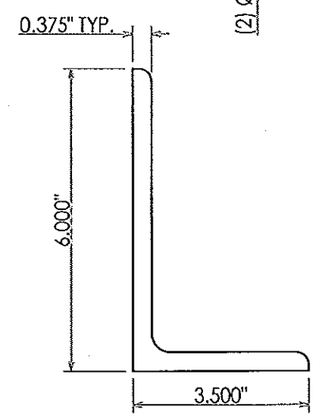

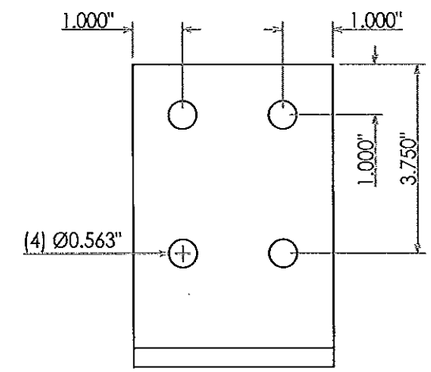

32 4" LONG 3 1/2" X 6" X 3/8" CLIP ANGLE

RICE ENGINEERING
105 School Creek Trail
Luxemburg, WI 54217
Phone 920.845 1042
Fax 920.845 1048
www.rice-inc.com

Florida Firm No. F-01000005061
Certificate of Authorization: #9090
L. David Rice
Registration No: 50923

PRODUCT REVISED
as complying with the Florida Building Code
Acceptance No 14-0908.22
Expiration Date 07/10/2018
By
Miami Dade Product Control

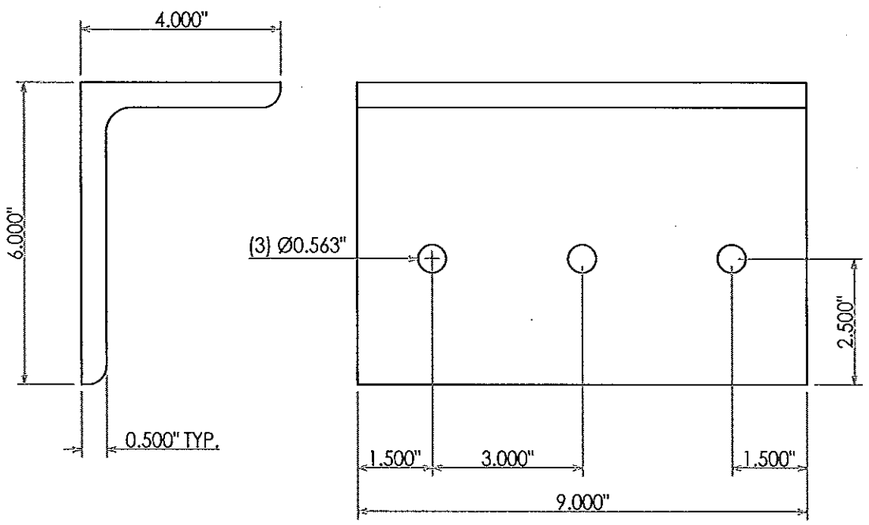

33 9" LONG 4" X 6" X 1/2" SHELF ANGLE

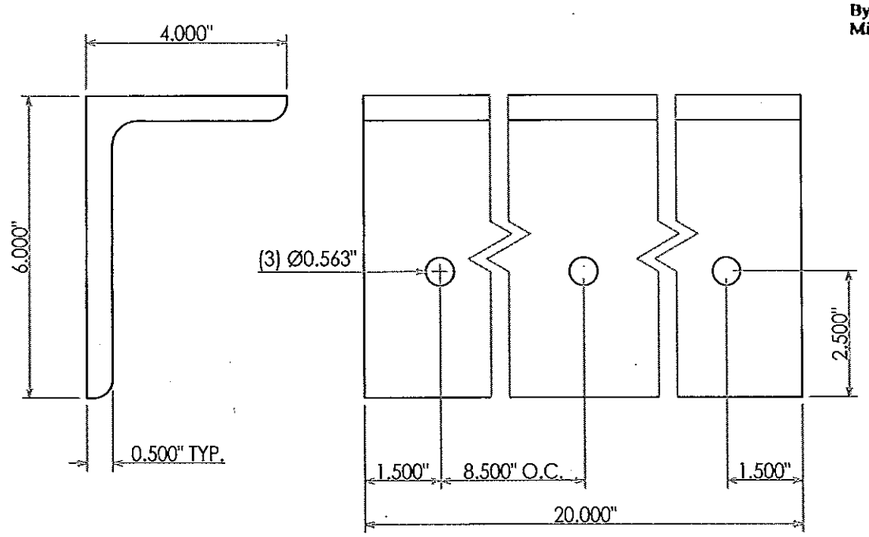

34 20" LONG 4" X 6" X 1/2" SHELF ANGLE

INDUSTRIAL LOUVERS INC.
IL.info@industrialLouvers.com
www.industrialLouvers.com
Delano, Minnesota
763-972-2981

SP537DC

5" Deep Storm Performance Dade County Approved Louver

Revisions

No.	By	Description	Date
1	DG	UPDATED MULLION SPANS AND MULLION ANCHOR DESIGN	06/19/13
2	DG	UPDATED PER ENGINEERING CALCULATIONS	07/09/13
3	DG	UPDATED PER COMPLIANCE OFFICE MARKUPS	09/04/13
4	DG	UPDATED PER REVISED CALCULATIONS	09/11/13
5	DG	UPDATED PER COMPLIANCE OFFICE MARKUPS	10/11/13
6	DG	UPDATED PER 2014 FBC	04/15/14

Date: 3/21/13
Drawn By: DG
Checked By: DM

Drawing No. RD-1032

Compliance Office Stamp
L. DAVID RICE
LICENSE
No. 50923
STATE OF FLORIDA
PROFESSIONAL ENGINEER

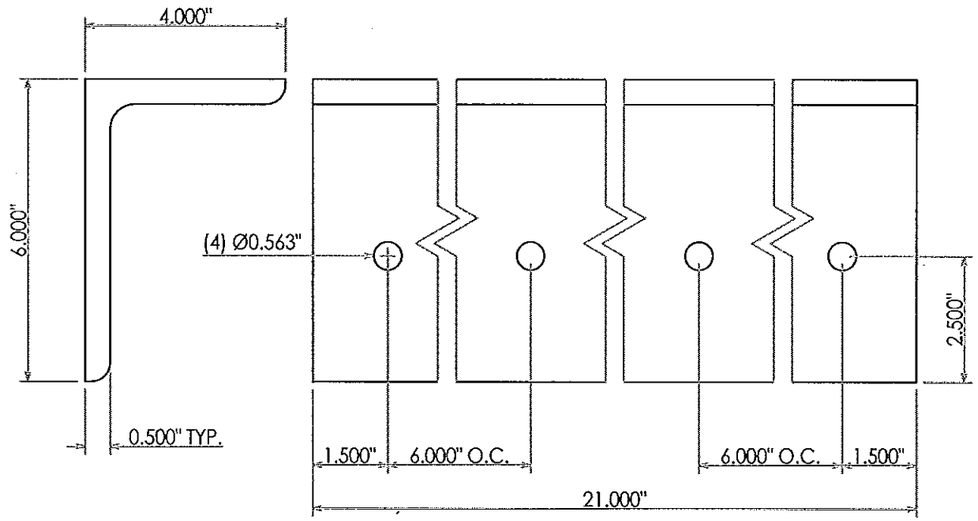

35 21" LONG 4" X 6" X 1/2" SHELF ANGLE

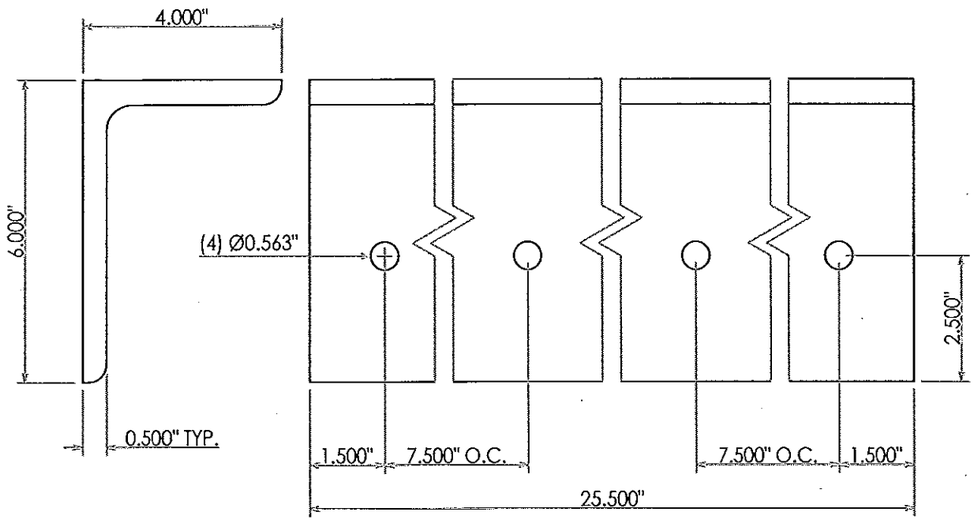

36 25 1/2" LONG 4" X 6" X 1/2" SHELF ANGLE

41 #8 X 5/8" SD PH SM SCREW

42 #10 X 5/8" SD PH SM SCREW

43 #12 X 1" SL HWH SM SCREW

44 1/4"-20 X 1" HH BOLT

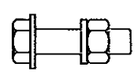

45 1/2"-13 X 2" HH BOLT

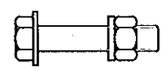

46 1/2"-13 X 2 1/2" HH BOLT

PRODUCT REVISED
as complying with the Florida
Building Code
Acceptance No 14-0908.22
Expiration Date 07/10/2018
By
Miami Dade Product Control

RICE
ENGINEERING
105 School Creek Trail
Luxemburg, WI 54217
Phone 920.845 1042
Fax 920.845 1048
www.rice-inc.com

Florida Firm No F-01000005061
Certificate of Authorization: #9090
L David Rice
Registration No: 50923

INDUSTRIAL LOUVERS INC.
ILinfo@industrialLouvers.com
www.industrialLouvers.com
Delano, Minnesota
763-972-2981

SP537DC

5" Deep Storm Performance Dade County Approved Louver

Revisions

No.	By	Description	Date
1	DG	UPDATED MULLION SPANS AND MULLION ANCHOR DESIGN	06/19/13
2	DG	UPDATED PER ENGINEERING CALCULATIONS	07/09/13
3	DG	UPDATED PER COMPLIANCE OFFICE MARKUPS	09/04/13
4	DG	UPDATED PER REVISED CALCULATIONS	09/11/13
5	DG	UPDATED PER COMPLIANCE OFFICE MARKUPS	10/11/13
6	DG	UPDATED PER 2014 FBC	04/15/14

Date: 3/21/13
Drawn By: DG
Checked By: DM

Drawing No. RD1032

Compliance Office Stamp
L. DAVID RICE
LICENSE
No. 50923
STATE OF FLORIDA
PROFESSIONAL ENGINEER

Sheet No.
11 Of 11