MIAMI-DADE COUNTY
DEPARTMENT OF REGULATORY AND ECONOMIC RESOURCES (RER)
BOARD AND CODE ADMINISTRATION DIVISION

MIAMI-DADE COUNTY
PRODUCT CONTROL SECTION
11805 SW 26 Street, Room 208
T (786) 315-2590 F (786) 315-2599
www.miamidade.gov/economy

NOTICE OF ACCEPTANCE (NOA)

Labrador & Fundora Corporation dba V & V Windows
2355 W 4th Ave
Hialeah, FL 33010–1454

SCOPE:

This NOA is being issued under the applicable rules and regulations governing the use of construction materials. The documentation submitted has been reviewed and accepted by Miami-Dade County RER - Product Control Section to be used in Miami Dade County and other areas where allowed by the Authority Having Jurisdiction (AHJ).

This NOA shall not be valid after the expiration date stated below. The Miami-Dade County Product Control Section (In Miami Dade County) and/or the AHJ (in areas other than Miami Dade County) reserve the right to have this product or material tested for quality assurance purposes. If this product or material fails to perform in the accepted manner, the manufacturer will incur the expense of such testing and the AHJ may immediately revoke, modify, or suspend the use of such product or material within their jurisdiction. RER reserves the right to revoke this acceptance, if it is determined by Miami-Dade County Product Control Section that this product or material fails to meet the requirements of the applicable building code.

This product is approved as described herein, and has been designed to comply with the Florida Building Code, including the High Velocity Hurricane Zone.

DESCRIPTION: Series "400" Outswing Aluminum Casement Window – L.M.I.

APPROVAL DOCUMENT: Drawing No. **W14–28**, titled "Series-400 Alum P.O. Casement Wdw (L.M.I.)", sheets 1 through 6 of 6, dated 08/20/14, prepared by Al–Farooq Corporation, signed and sealed by Javad Ahmad, P.E., bearing the Miami–Dade County Product Control Section Approval stamp with the Notice of Acceptance number and approval date by the Miami–Dade County Product Control Section.

MISSILE IMPACT RATING: Large and Small Missile Impact Resistant

LABELING: Each unit shall bear a permanent label with the manufacturer's name or logo, city, state, model/series, and following statement: "Miami-Dade County Product Control Approved", unless otherwise noted herein.

RENEWAL of this NOA shall be considered after a renewal application has been filed and there has been no change in the applicable building code negatively affecting the performance of this product.

TERMINATION of this NOA will occur after the expiration date or if there has been a revision or change in the materials, use, and/or manufacture of the product or process. Misuse of this NOA as an endorsement of any product, for sales, advertising or any other purposes shall automatically terminate this NOA. Failure to comply with any section of this NOA shall be cause for termination and removal of NOA.

ADVERTISEMENT: The NOA number preceded by the words Miami-Dade County, Florida, and followed by the expiration date may be displayed in advertising literature. If any portion of the NOA is displayed, then it shall be done in its entirety.

INSPECTION: A copy of this entire NOA shall be provided to the user by the manufacturer or its distributors and shall be available for inspection at the job site at the request of the Building Official.

This NOA consists of this page 1 and evidence pages E-1, E-2 and E-3, as well as approval document mentioned above.

The submitted documentation was reviewed by **Manuel Perez, P.E.**

MIAMI-DADE COUNTY APPROVED

12/17/14

Labrador & Fundora Corporation dba V & V Windows

NOTICE OF ACCEPTANCE: EVIDENCE SUBMITTED

A. DRAWINGS

1. Manufacturer's die drawings and sections.
2. Drawing No. **W14–28**, titled "Series-400 Alum P.O. Casement Wdw. (L.M.I.)", sheets 1 through 6 of 6, dated 08/20/14, prepared by Al-Farooq Corporation, signed and sealed by Javad Ahmad, P.E.

B. TESTS

1. Test reports on: 1) Air Infiltration Test, per FBC, TAS 202-94
   2) Uniform Static Air Pressure Test, Loading per FBC TAS 202-94
   3) Water Resistance Test, per FBC, TAS 202-94

   along with marked-up drawings and installation diagram of mulled aluminum fixed and fixed casement windows, prepared by Hurricane Test Laboratory, Inc., Test Report No. **HETI-14-5009**, dated 04/23/14, signed and sealed by Rafael E. Droz–Seda, P.E.
2. Test reports on: 1) Large Missile Impact Test per FBC, TAS 201-94
   2) Cyclic Wind Pressure Loading per FBC, TAS 203-94

   along with marked-up drawings and installation diagram of mulled aluminum fixed and fixed casement windows, prepared by Hurricane Test Laboratory, Inc., Test Report No. **HETI-14-5010**, dated 04/23/14, signed and sealed by Rafael E. Droz–Seda, P.E.
3. Test reports on: 1) Air Infiltration Test, per FBC, TAS 202-94
   2) Uniform Static Air Pressure Test, Loading per FBC TAS 202-94
   3) Water Resistance Test, per FBC, TAS 202-94
   4) Forced Entry Test, per FBC 2411.3.2.1, and TAS 202–94

   along with marked-up drawings and installation diagram of mulled aluminum operable casement windows, prepared by Hurricane Test Laboratory, Inc., Test Report No. **HETI-14-5011**, dated 04/23/14, signed and sealed by Rafael E. Droz–Seda, P.E.
4. Test reports on: 1) Large Missile Impact Test per FBC, TAS 201-94
   2) Cyclic Wind Pressure Loading per FBC, TAS 203-94

   along with marked-up drawings and installation diagram of mulled aluminum operable casement windows, prepared by Hurricane Test Laboratory, Inc., Test Report No. Report No. **HETI-14-5012**, dated 04/23/14, signed and sealed by Rafael E. Droz–Seda, P.E.

Manuel Perez

Manuel Perez, P.E.
Product Control Examiner
NOA No. 14-0909.17
Expiration Date: December 24, 2019
Approval Date: December 24, 2014

B. TESTS (CONTINUED)

5. Test reports on: 1) Air Infiltration Test, per FBC, TAS 202-94
   2) Uniform Static Air Pressure Test, Loading per FBC TAS 202-94
   3) Water Resistance Test, per FBC, TAS 202-94
   4) Forced Entry Test, per FBC 2411.3.2.1, and TAS 202–94

   along with marked-up drawings and installation diagram of mulled aluminum operable casement and fixed casement windows, prepared by Hurricane Test Laboratory, Inc., Test Report No. **HETI-14-5013**, dated 04/23/14, signed and sealed by Rafael E. Droz–Seda, P.E.
6. Test reports on: 1) Large Missile Impact Test per FBC, TAS 201-94
   2) Cyclic Wind Pressure Loading per FBC, TAS 203-94

   along with marked-up drawings and installation diagram of mulled aluminum operable casement and fixed casement windows, prepared by Hurricane Test Laboratory, Inc., Test Report No. **HETI-14-5014**, dated 04/23/14, signed and sealed by Rafael E. Droz–Seda, P.E.
7. Test reports on: 1) Large Missile Impact Test per FBC, TAS 201-94
   2) Cyclic Wind Pressure Loading per FBC, TAS 203-94

   along with marked-up drawings and installation diagram of an aluminum fixed window, prepared by Hurricane Test Laboratory, Inc., Test Report No. **HETI-14-5015**, dated 04/23/14, signed and sealed by Rafael E. Droz–Seda, P.E.
8. Test reports on: 1) Large Missile Impact Test per FBC, TAS 201-94
   2) Cyclic Wind Pressure Loading per FBC, TAS 203-94

   along with marked-up drawings and installation diagram of an aluminum operable casement window, prepared by Hurricane Test Laboratory, Inc., Test Report No. **HETI-14-5016**, dated 04/23/14, signed and sealed by Rafael E. Droz–Seda, P.E.
9. Test reports on: 1) Large Missile Impact Test per FBC, TAS 201-94
   2) Cyclic Wind Pressure Loading per FBC, TAS 203-94

   along with marked-up drawings and installation diagram of mulled aluminum operable casement and fixed windows, prepared by Hurricane Test Laboratory, Inc., Test Report No. **HETI-14-5017**, dated 04/23/14, signed and sealed by Rafael E. Droz–Seda, P.E.
10. Test reports on: 1) Large Missile Impact Test per FBC, TAS 201-94
    2) Cyclic Wind Pressure Loading per FBC, TAS 203-94

    along with marked-up drawings and installation diagram of mulled aluminum operable casement and fixed windows, prepared by Hurricane Test Laboratory, Inc., Test Report No. **HETI-14-5018**, dated 06/11/14, signed and sealed by Rafael E. Droz–Seda, P.E.

Manuel Perez

Manuel Perez, P.E.
Product Control Examiner
NOA No. 14-0909.17
Expiration Date: December 24, 2019
Approval Date: December 24, 2014

NOTICE OF ACCEPTANCE: EVIDENCE SUBMITTED

B. TESTS (CONTINUED)

11. Test reports on: 1) Air Infiltration Test, per FBC, TAS 202-94
2) Uniform Static Air Pressure Test, Loading per FBC TAS 202-94
3) Water Resistance Test, per FBC, TAS 202-94
4) Forced Entry Test, per FBC 2411.3.2.1, and TAS 202–94
along with marked-up drawings and installation diagram of an aluminum operable casement window, prepared by Hurricane Test Laboratory, Inc., Test Report No. **HETI-14-5019**, dated 04/23/14, signed and sealed by Rafael E. Droz– Seda, P.E.

12. Test reports on: 1) Large Missile Impact Test per FBC, TAS 201-94
2) Cyclic Wind Pressure Loading per FBC, TAS 203-94
along with marked-up drawings and installation diagram of mulled aluminum operable casement and fixed windows, prepared by Hurricane Test Laboratory, Inc., Test Report No. **HETI-14-5052**, dated 10/21/14, signed and sealed by Rafael E. Droz–Seda, P.E.

C. CALCULATIONS

1. Anchor verification calculations and structural analysis, complying with **FBC-5th Edition (2014)**, dated 08/09/14, prepared by Al-Farooq Corporation, signed and sealed by Javad Ahmad, P.E.
2. **Glazing complies with ASTM E1300-09**

D. QUALITY ASSURANCE

1. Miami–Dade Department of Regulatory and Economic Resources (RER).

E. MATERIAL CERTIFICATIONS

1. Notice of Acceptance No. **14–0423.17** issued to **Eastman Chemical Company (MA)** for their "**Saflex Clear and Color Glass Interlayers**" dated 0619/14, expiring on 05/21/16.
2. Notice of Acceptance No. **11–0624.02** issued to **E.I. DuPont DeNemours & Co.**, Inc. for their "**DuPont SentryGlas® Interlayer**" dated 08/25/11, expiring on 01/14/17.

F. STATEMENTS

1. Statement letter of conformance, complying with **FBC-5th Edition (2014)**, and of no financial interest, dated August 13, 2014, issued by Al-Farooq Corporation, signed and sealed by Javad Ahmad, P.E.
2. Proposal issued by the Product Control Section, dated August 27, 2013, signed by Jaime D. Gascon, P.E., Product Control Supervisor.

G. OTHERS

1. None.

Manuel Perez, P.E.
Product Control Examiner
NOA No. 14-0909.17
Expiration Date: December 24, 2019
Approval Date: December 24, 2014

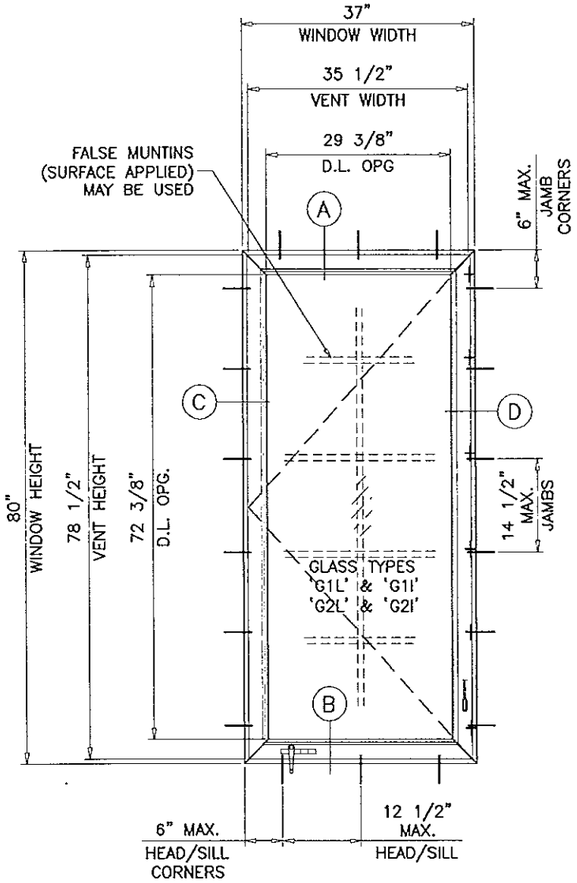

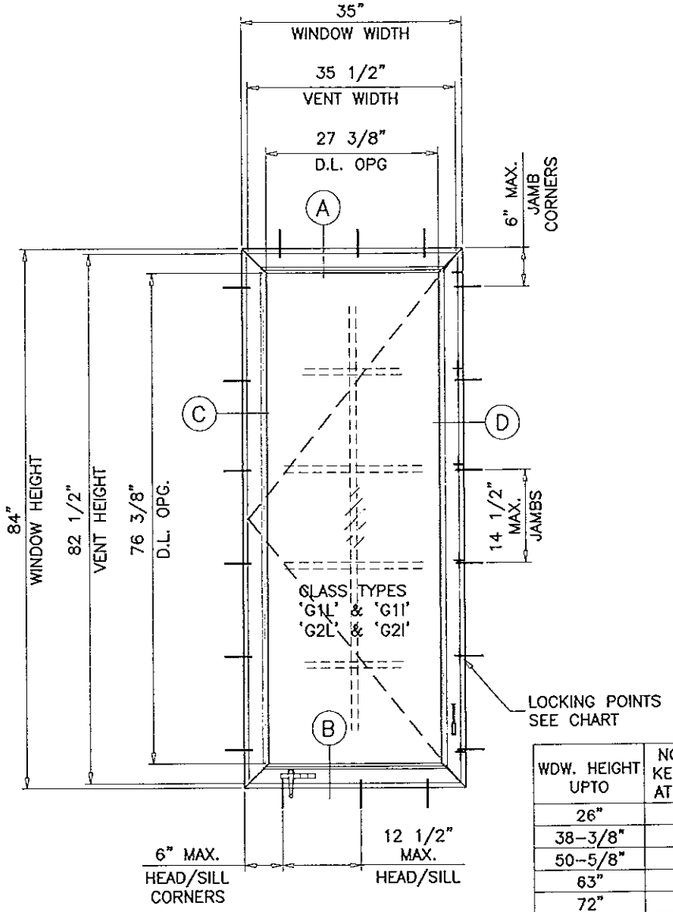

WDW. HEIGHT UPTO	NO. OF KEEPERS AT SASH
26"	2
38-3/8"	3
50-5/8"	4
63"	5
72"	6
74-1/4"	6
80"	6
84"	6

TYPICAL ELEVATIONS

GLASS TYPES 'G1L', 'G1I', 'G2L' & 'G2I'

MAXIMUM DESIGN LOAD RATING = + 70.0 PSF
(FOR SIZES SHOWN ABOVE OR SMALLER) − 75.0 PSF

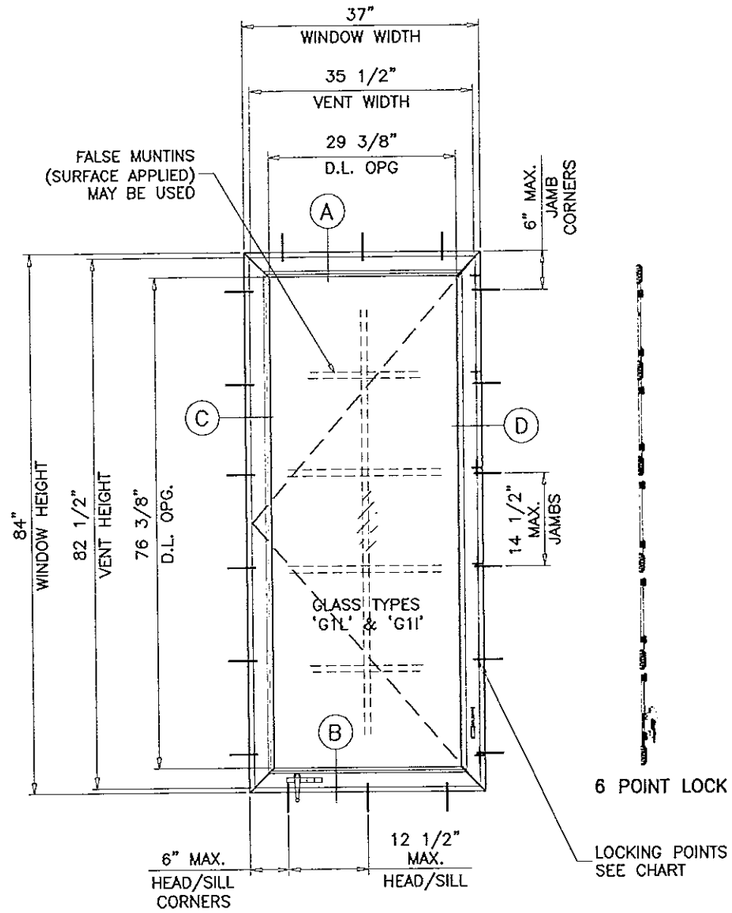

TYPICAL ELEVATION

GLASS TYPES 'G1L' & 'G1I'

MAXIMUM DESIGN LOAD RATING = + 85.0 PSF
(FOR SIZE SHOWN ABOVE OR SMALLER) − 85.0 PSF

THESE WINDOWS ARE RATED FOR LARGE & SMALL MISSILE IMPACT. SHUTTERS ARE NOT REQUIRED.

SERIES-400
ALUMINUM PROJECT-OUT CASEMENT WINDOW

APPROVAL APPLIES TO SINGLE UNITS OR SIDE BY SIDE COMBINATIONS OF CASMT./CASMT. OR CASEMENT WITH OTHER WINDOW TYPES IN MODULES OF TWO OR MORE WINDOWS USING MIAMI-DADE COUNTY APPROVED MULLIONS IN BETWEEN.
LOWER DESIGN PRESSURE FROM WINDOWS OR MULLION APPROVAL WILL APPLY TO ENTIRE SYSTEM.

THIS PRODUCT HAS BEEN DESIGNED AND TESTED TO COMPLY WITH THE REQUIREMENTS OF THE FLORIDA BUILDING CODE INCLUDING HIGH VELOCITY HURRICANE ZONE (HVHZ).

WOOD BUCKS BY OTHERS, MUST BE ANCHORED PROPERLY TO TRANSFER LOADS TO THE STRUCTURE.

ANCHORS SHALL BE AS LISTED, SPACED AS SHOWN ON DETAILS, ANCHORS EMBEDMENT TO BASE MATERIAL SHALL BE BEYOND WALL DRESSING OR STUCCO.

ANCHORING OR LOADING CONDITIONS NOT SHOWN IN THESE DETAILS ARE NOT PART OF THIS APPROVAL.

A LOAD DURATION INCREASE IS USED IN DESIGN OF ANCHORS INTO WOOD ONLY.

ALL SHIMS TO BE HIGH IMPACT, NON-METALLIC AND NON-COMPRESSIBLE.

MATERIALS INCLUDING BUT NOT LIMITED TO STEEL/METAL SCREWS, THAT COME INTO CONTACT WITH OTHER DISSIMILAR MATERIALS SHALL MEET THE REQUIREMENTS OF THE FLORIDA BUILDING CODE.

NOTE:
GLASS CAPACITIES ON THIS SHEET ARE BASED ON ASTM E1300-09 (3 SEC. GUSTS) AND FLORIDA BUILDING COMMISSION DECLARATORY STATEMENT DCA05-DEC-219

Engr: JAVAD AHMAD
CIVIL
FLA. PE # 70592
C.A.N. 3538

AUG 26 2014

Approved as complying with the Florida Building Code
Date Dec 24 2014
NOA# 14-0709.17
Miami Dade Product Control
By Manuel Perez

AL-FAROOQ CORPORATION
ENGINEERS & PRODUCT DEVELOPMENT
1235 S.W. 87 AVE
MIAMI, FLORIDA 33174
TEL. (305) 264-8100 FAX. (305) 262-6978

COMP-ANL\W14-28W

SERIES-400 ALUM P.O. CASEMENT WDW. (L.M.I.)

Labrador & Fundora Corp.
dba-V & V Windows
2355 West 4th Ave.
Hialeah, Fl. 33010
TEL. (305) 888-4151 FAX. (305) 888-1042

revisions:			
no	date	by	description

date: 08-20-14
scale: 1/2"=1'-0"
dr. by: HAMID
chk. by:

drawing no.
W14-28

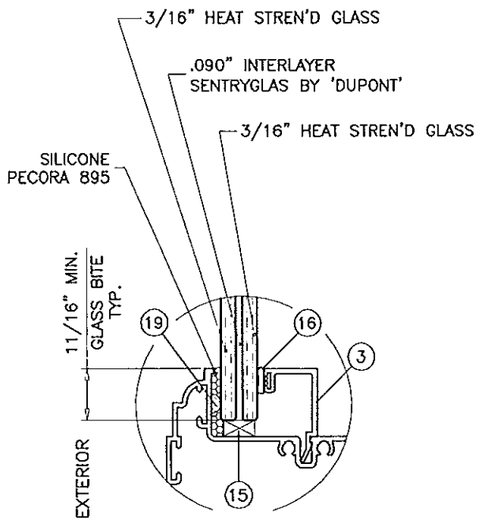

GLASS TYPE 'G1L'

7/16" OVERALL NOM.

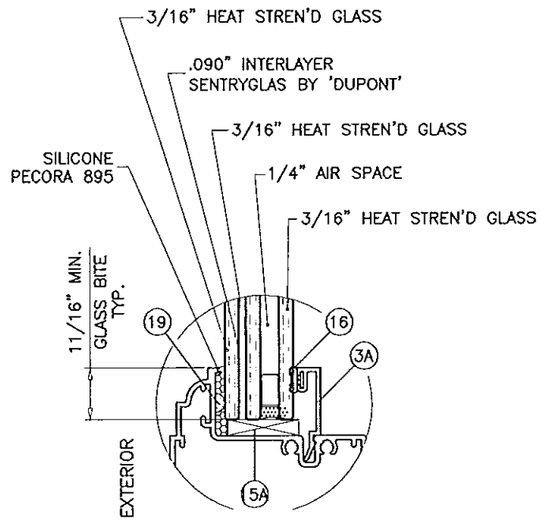

GLASS TYPE 'G1I'

1" OVERALL NOM.

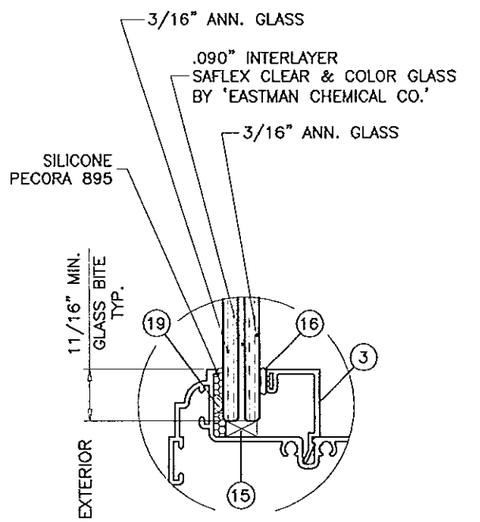

GLASS TYPE 'G2L'

7/16" OVERALL NOM.

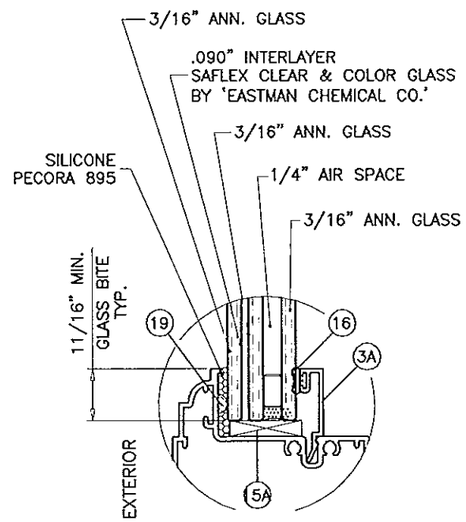

GLASS TYPE 'G2I'

1" OVERALL NOM.

GLAZING OPTIONS

Engr: JAVAD AHMAD
CIVIL
FLA. PE # 70592
C.A.N. 3538

AUG 26 2014

Approved as complying with the
Florida Building Code
Date Dec. 24, 2014
NOA# 14-0409.17
Miami Dade Product Control
By Manuel Perez

AL-FAROOQ CORPORATION
ENGINEERS & PROJECT DEVELOPMENT
1235 S.W. 87 AVE
MIAMI, FLORIDA 33174
TEL. (305) 264-8100 FAX. (305) 262-6978

COMP-ANL\W14-28W

SERIES-400 ALUM P.O. CASEMENT WDW. (L.M.I.)

Labrador & Fundora Corp.
dba-V & V Windows
2355 West 4th Ave.
Hialeah, Fl. 33010
TEL. (305) 888-4151 FAX. (305) 888-1042

revisions:

no	date	by	description

date: 08-20-14
scale: 1/2" = 1"
dr. by: HAMID
chk. by:

drawing no.
W14-28

sheet 2 of 6

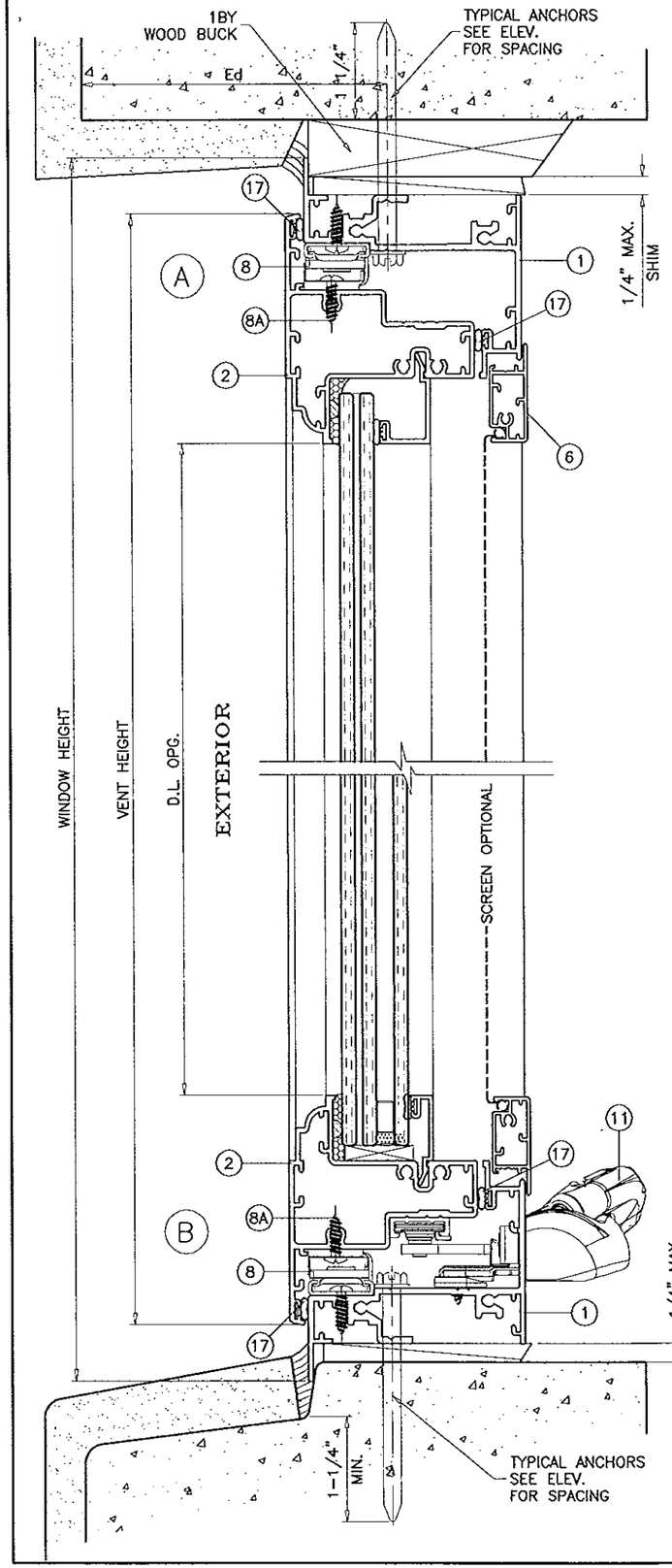

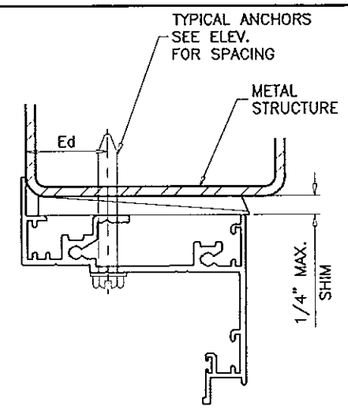

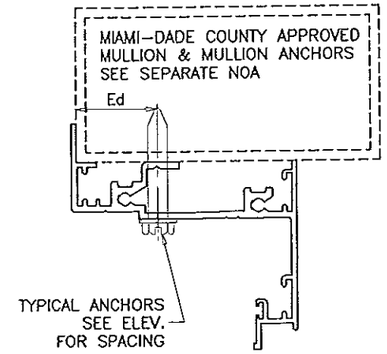

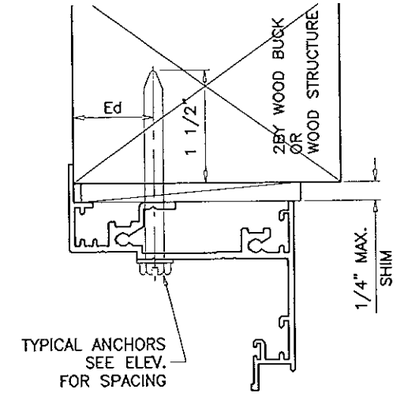

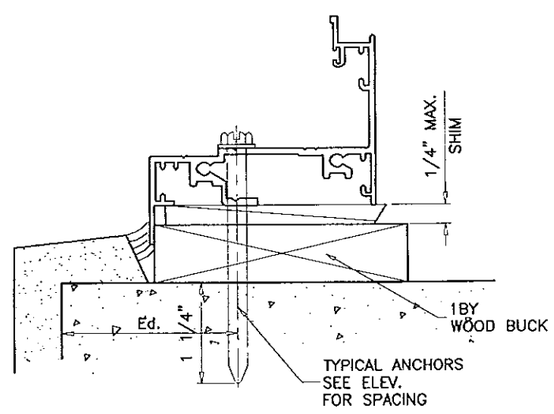

WOOD BUCKS AND METAL STRUCTURE NOT BY V & V WDW.
MUST SUSTAIN LOADS IMPOSED BY GLAZING SYSTEM
AND TRANSFER THEM TO THE BUILDING STRUCTURE.

TYPICAL ANCHORS: SEE ELEV. FOR SPACING

1/4" DIA. ULTRACON BY 'ELCO' (Fu=177 KSI, Fy=155 KSI)

INTO 2BY WOOD BUCKS OR WOOD STRUCTURES
1-1/2" MIN. PENETRATION INTO WOOD

THRU 1BY BUCKS INTO CONC. OR MASONRY
1-1/4" MIN. EMBED INTO CONCRETE (HEAD/SILL)
1-1/4" MIN. EMBED INTO CONC. OR MASONRY (JAMBS)

DIRECTLY INTO CONC. OR MASONRY
1-1/4" MIN. EMBED INTO CONCRETE (HEAD/SILL)
1-1/4" MIN. EMBED INTO CONC. OR MASONRY (JAMBS)

#14 SMS OR SELF DRILLING SCREWS (GRADE 2 CRS)
INTO METAL STRUCTURES
STEEL : 12 GA. MIN. (Fy = 36 KSI MIN.)
ALUMINUM : 1/8" THK. MIN. (6063-T5 MIN.)
(STEEL IN CONTACT WITH ALUMINUM TO BE PLATED OR PAINTED)

#12 SMS OR SELF DRILLING SCREWS (GRADE 2 CRS)
INTO MIAMI-DADE COUNTY APPROVED MULLIONS (MIN. THK. = 1/8")
(NO SHIM SPACE)

TYPICAL EDGE DISTANCE
INTO CONCRETE AND MASONRY = 2-1/2" MIN.
INTO WOOD STRUCTURE = 1" MIN.
INTO METAL STRUCTURE = 3/4" MIN.

WOOD AT HEAD, SILL OR JAMBS SG = 0.55 MIN.
CONCRETE AT HEAD, SILL OR JAMBS f'c = 3000 PSI MIN.
C-90 HOLLOW/FILLED BLOCK AT JAMBS f'm = 2000 PSI MIN.

Engr: JAVAD AHMAD
CIVIL
FLA. PE # 70592
C.A.N. 3538

AUG 26 2014

Approved as complying with the Florida Building Code
Date Dec. 24 2014
NOA# 14-0909.17
Miami Dade Product Control
By

AL-FAROOQ CORPORATION
ENGINEERS & PRODUCT DEVELOPMENT
1235 S.W. 87 AVE
MIAMI, FLORIDA 33174
TEL. (305) 264-8100 FAX. (305) 262-6978

COMP-ANL\W14-28VV

SERIES-400 ALUM P.O. CASEMENT WDW. (L.M.I.)

Labrador & Fundora Corp.
dba-V & V Windows
2355 West 4th Ave.
Hialeah, Fl. 33010
TEL. (305) 888-4151 FAX. (305) 888-1042

revisions:

no	date	by	description

date: 08-20-14
scale: 1/2" = 1"
dr. by: HAMID
chk. by:

drawing no.
W14-28

sheet 3 of 6

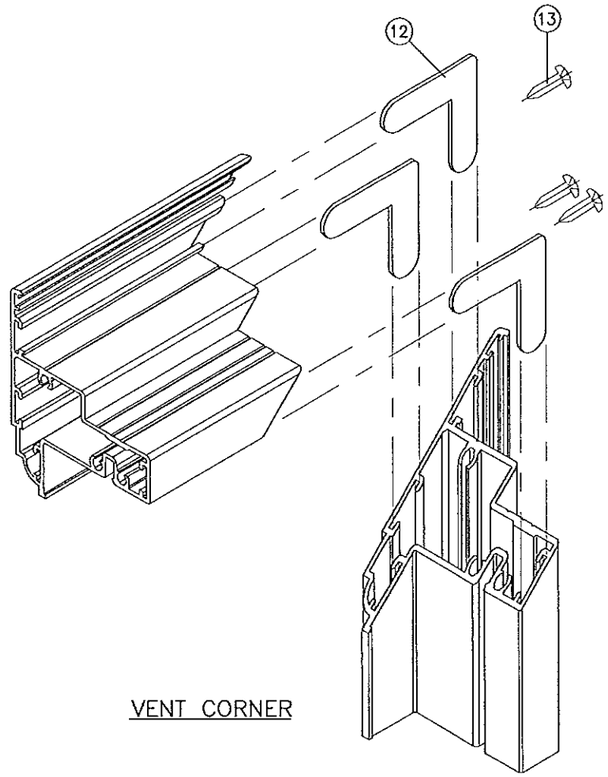

VENT CORNER

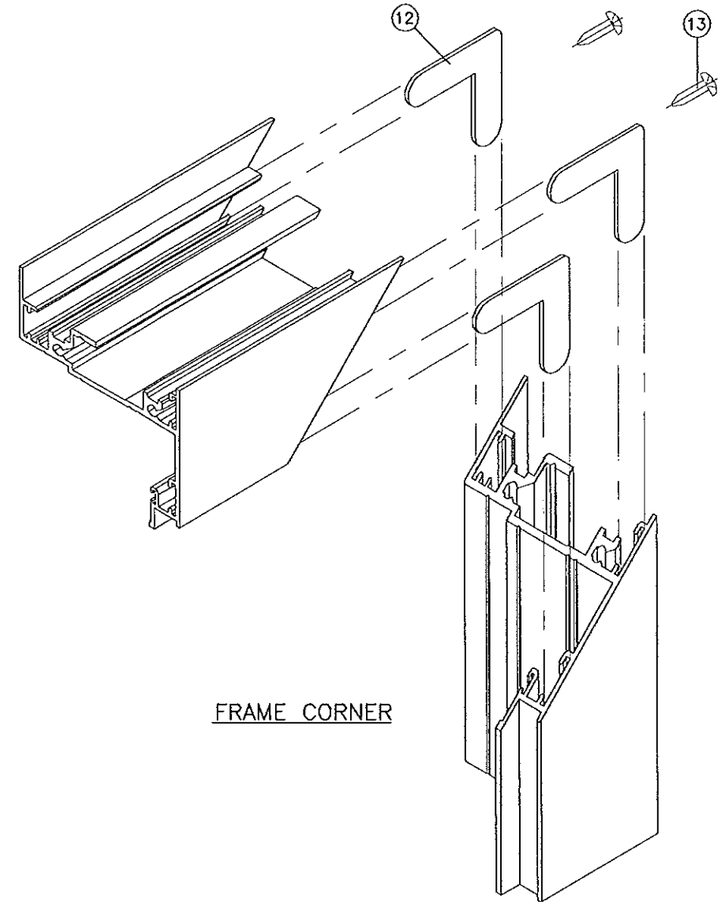

FRAME CORNER

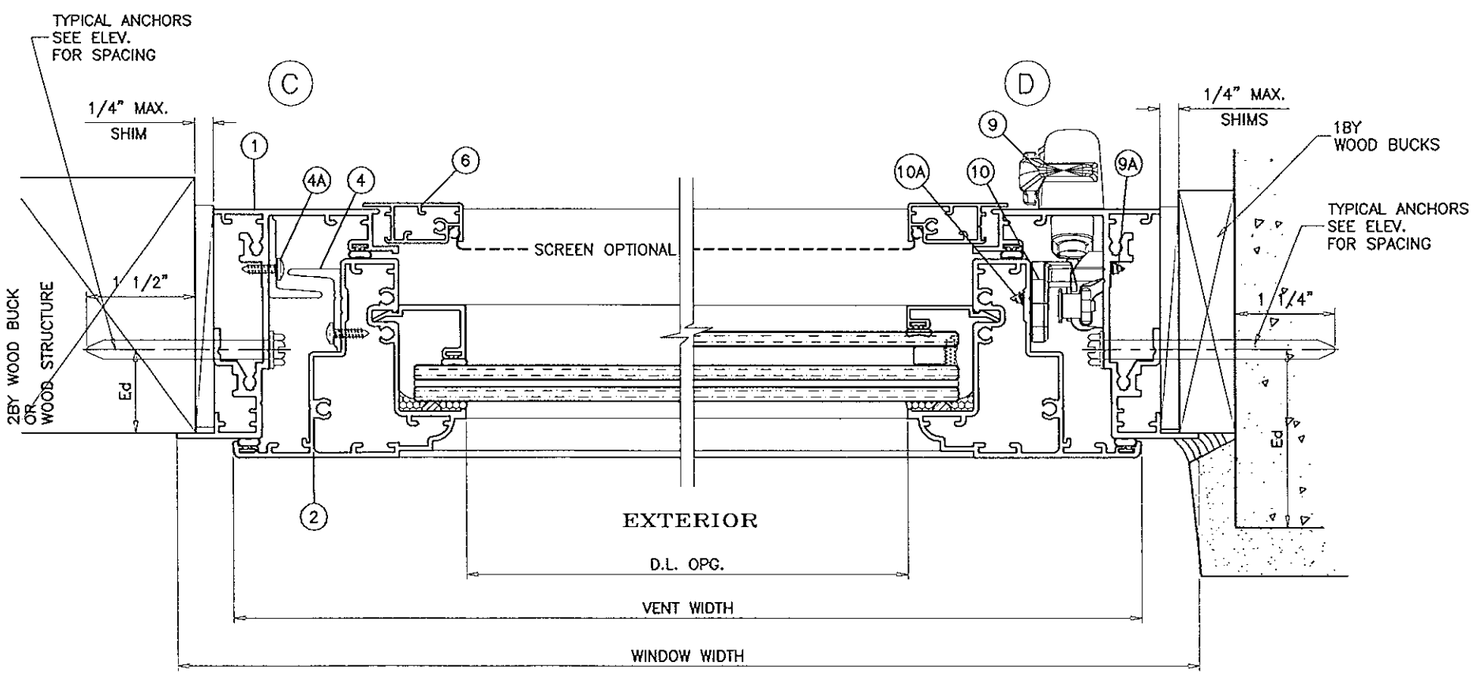

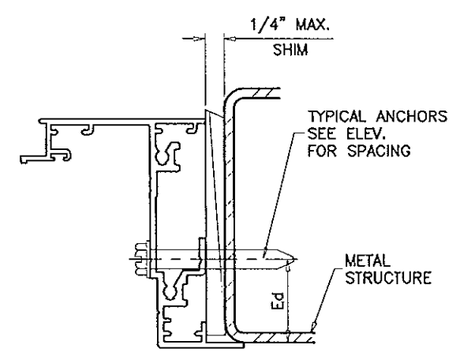

Engr: JAVAD AHMAD
CIVIL
FLA. PE # 70592
C.A.N. 3538

AUG 26 2014

Approved as complying with the
Florida Building Code
Date Dec. 24, 2014
NOA# 14.0909.17
Miami Dade Product Control
By Manuel Perez

AL-FAROOQ CORPORATION
ENGINEERS & PRODUCT DEVELOPMENT
1235 S.W. 87 AVE
MIAMI, FLORIDA 33174
TEL. (305) 264-8100 FAX. (305) 262-6978

COMP-ANL\W14-28V

SERIES-400 ALUM P.O. CASEMENT WDW. (L.M.I.)

Labrador & Fundora Corp.
dba-V & V Windows
2355 West 4th Ave.
Hialeah, Fl. 33010
TEL. (305) 888-4151 FAX. (305) 888-1042

revisions:		
no	date	by description

date: 08-20-14
scale: 1/2" = 1"
dr. by: HAMID
chk. by:

drawing no.
W14-28

sheet 4 of 6

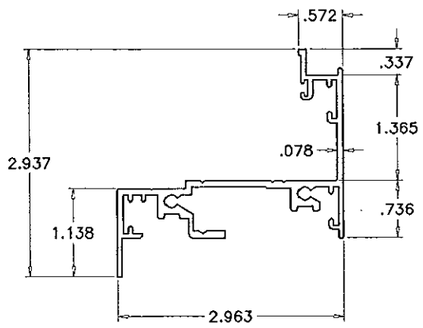

(1) CASEMENT FRAME HEAD/SILL/JAMB

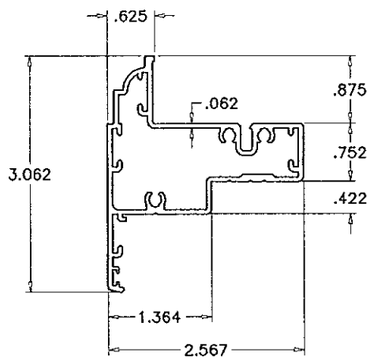

(2) VENT

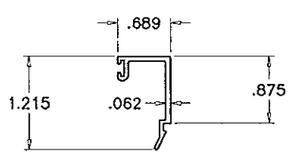

(3) GLAZING BEAD (LAM. GLASS)

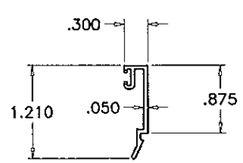

(3A) GLAZING BEAD (INSUL. LAM. GLASS)

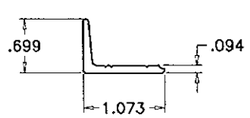

(4) FRAME & VENT SNUBBER

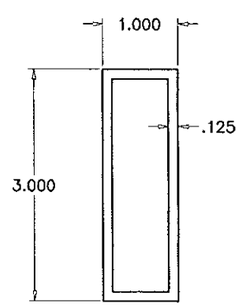

(20) TUBE MULLION

ITEM	PART #	QUANTITY	DESCRIPTION	MATERIAL	MANF./SUPPLIER/REMARKS
1	V401	4/ WDW.	FRAME HEAD/SILL/JAMB	6063-T6	–
2	V402	4/ WDW.	VENT	6063-T6	–
3	V405	4/ WDW.	GLAZING BEAD (LAM. GLASS)	6063-T5	–
3A	V406	4/ WDW.	GLAZING BEAD (INSUL. LAM. GLASS)	6063-T5	–
4	V407	AS REQD.	VENT AND FRAME SNUBBERS	6063-T6	LENGTH = FRAME HEIGHT – 18"
4A	#8 X 1/2"	AS REQD.	SNUBBER MOUNTING SCREWS	ST. STEEL	PPH SMS, AT 1-1/4" FROM ENDS & 10-1/2" O.C.
6	V409	AS REQD.	SCREEN	6063-T5	OPTIONAL
8	–	2	4 BAR HINGE AT TOP & BOTTOM	ST. STEEL	SULLIVAN & ASSOC.
8A	#10 X 1/2"	2/ HINGE	HINGE INSTALLATION SCREWS	ST. STEEL	PPH STS
9	–	1	FACE MOUNT MULTI POINT LOCK	ST. STEEL	INTERLOCK
9A	#8 X 1/2"	2/ LOCK	LOCK INSTALLATION SCREWS	ST. STEEL	THREAD FORMING SCREWS
10	–	1	LOCK KEEPER FACING LOCK	–	INTERLOCK
10A	#8 X 1/2"	2/ KEEPER	KEEPER INSTALLATION SCREWS	ST. STEEL	THREAD FORMING SCREWS
11	–	1	VENT OPERATOR	–	INTERLOCK
11A	#10 X 1/2"	6/ OPERATOR	OPERATOR INSTALLATION SCREWS	ST. STEEL	FH MS
11B	#10 X 1/2"	3/ TRACK	OPERATOR TRACK INSTALLATION SCREWS	ST. STEEL	FH MS
12	PJ540-SS	AS REQD.	CORNER KEY	ST. STEEL	SULLIVAN & ASSOC.
13	#10 X 1-1/4"	AS REQD.	FRAME AND VENT ASSEMBLY SCREWS	CRS	PH SMS
15	–	AS REQD.	SETTING BLOCK	EPDM	ULTRAFAB, DUROMETER 75±5 SHORE A
15A	–	AS REQD.	SETTING BLOCK	EPDM	ULTRAFAB, DUROMETER 75±5 SHORE A
16	–	AS REQD.	GLAZING GASKET	VINYL	CENTRAL PLASTICS, DUROMETER 65±5 SHORE A
17	9146	AS REQD.	FRAME & VENT W'STRIPPING	VINYL	CENTRAL PLASTICS, DUROMETER 65±5 SHORE A
19	–	AS REQD.	GLASS SPACER	SILICONE	FRANK LOWE, DUROMETER 65±5 SHORE A
20	–	AS REQD.	TUBE MULLION	6063-T6	–

SEALANT:

ALL JOINTS AND FRAME CONNECTIONS SEALED WITH 'PECORA 1215' SEAM SEALER.

PARIMETER CAULKING 'DYMONIC FC POLYURETHANE' ON EXTERIOR ONLY.

LOCKS:

MULTIPOINT LOCK SYSTEM #CL02 BY 'INTERLOCK'
AT FRAME JAMB
LOCK OPERATOR #CL02-0600 AT 10" FROM SILL
FASTENED TO JAMBS WITH (2) #10 X 1/2" PPH SELF TAPPING SCREWS
LOCK BAR SECURED TO JAMB WITH LOCK GUIDES #CL02-2035-00E
SPACED AT 6" O.C. MAX.
EACH GUIDE FASTENED WITH (2) #8 X 1/2" PFH SELF TAPPING SCREWS

PLASTIC KEEPERS #CL02-2046-030 AT VENT
EACH FASTENED WITH (4) #8 X 1/2" PFH SELF TAPPING SCREWS
SEE CHART ON SHEET 1 FOR QUANTITIES

HINGES:

4 BAR ST/ST HINGES #304CJ200-16AE BY 'SULLIVAN & ASSOC.'
LOCATED AT TOP AND BOTTOM CORNERS
FASTENED WITH (2) #10 X 1/2" PPH SELF TAPPING SCREWS

OPERATOR:

SINGLE ARM ROTO OPERATOR #C011-152-02 BY 'SULLIVAN & ASSOC.'
LOCATED AT SILL END
FASTENED WITH (6) #10 X 1/2" PFH SELF TAPPING SCREWS
OPERATOR TRACK #C011-0705 AT BOTTOM RAIL
FASTENED WITH (3) #10 X 1/2" PFH SELF TAPPING SCREWS

Engr: JAVAD AHMAD
CIVIL
FLA. PE # 70592
C.A.N. 3538

AUG 26 2014

Approved as complying with the Florida Building Code
Date Dec. 24, 2014
NOA# 14-0909.17
Miami Dade Product Control
By Manuel Lara

AL-FAROOQ CORPORATION
ENGINEERS & PRODUCT DEVELOPMENT
12235 S.W. 87 AVE
MIAMI, FLORIDA 33174
TEL. (305) 264-8100 FAX. (305) 262-6978

COMP-ANL\W14-28W

SERIES-400 ALUM P.O. CASEMENT WDW. (L.M.I.)

Labrador & Fundora Corp.
dba-V & V Windows
2355 West 4th Ave.
Hialeah, Fl. 33010
TEL. (305) 888-4151 FAX. (305) 888-1042

revisions:			
no	date	by	description

date: 08-20-14
scale: 1/2" = 1"
dr. by: HAMID
chk. by:

drawing no. W14-28

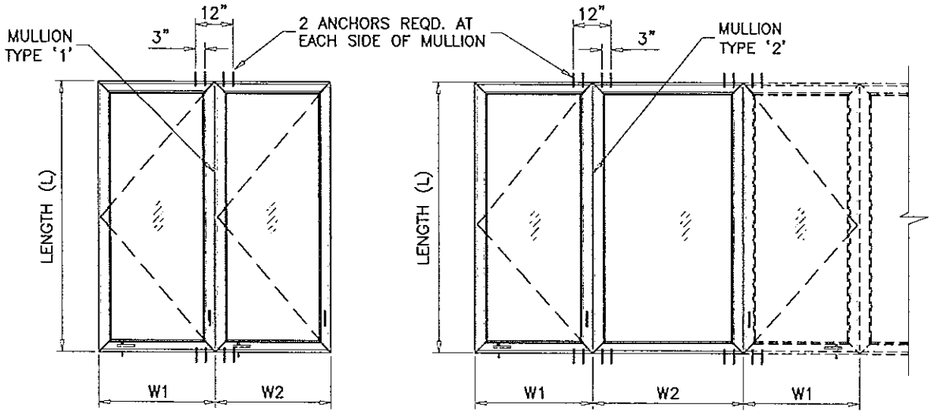

TYPICAL ELEVATIONS

SIDE BY SIDE WINDOWS

SIDE BY SIDE APPLIES TO TWO OR MORE WINDOWS

$$\text{WIDTH (W)} = \frac{W1 + W2}{2}$$

MULLION LOAD CAPACITY - PSF			
WINDOW DIMS.		MULLION TYPE '1'	
WIDTH (W)	LENGTH (L)	EXT.(+)	INT.(−)
19-1/8"	80"	85.0	85.0
26-1/2"		85.0	85.0
37"		85.0	85.0
19-1/8"	84"	85.0	85.0
26-1/2"		85.0	85.0
37"		83.3	83.3
18"	84"	85.0	85.0
24"		85.0	85.0
30"		85.0	85.0
36"		85.0	85.0

MULLION LOAD CAPACITY - PSF			
WINDOW DIMS.		MULLION TYPE '2'	
WIDTH (W)	LENGTH (L)	EXT.(+)	INT.(−)
31-3/4"	84"	85.0	85.0
37"		85.0	85.0
45-1/16"		85.0	85.0
48-1/2"		85.0	85.0
36"	84"	85.0	85.0
39"		85.0	85.0
42"		85.0	85.0
45"		85.0	85.0
48"		85.0	85.0

NOTES:

1. USE CHART ON THIS SHEET FOR SIDE BY SIDE CONNECTION CAPACITY OF WINDOW MULLION.
2. FOR CASEMENT WINDOW CAPACITY SEE SHEET 1.
3. FOR FIXED WINDOWS CAPACITY SEE SEPARATE NOA.
4. LOWER VALUES FROM STEPS 1, 2 OR 3 WILL APPLY TO ENTIRE SYSTEM.

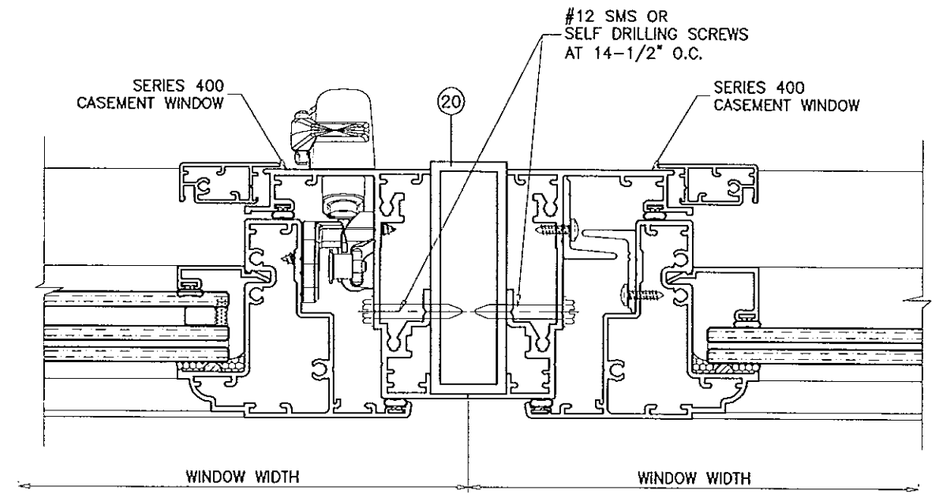

MULLION TYPE '1'

TOTAL PRPERTIES
Ix = 3.948 IN\4
Sx = 2.302 IN\3

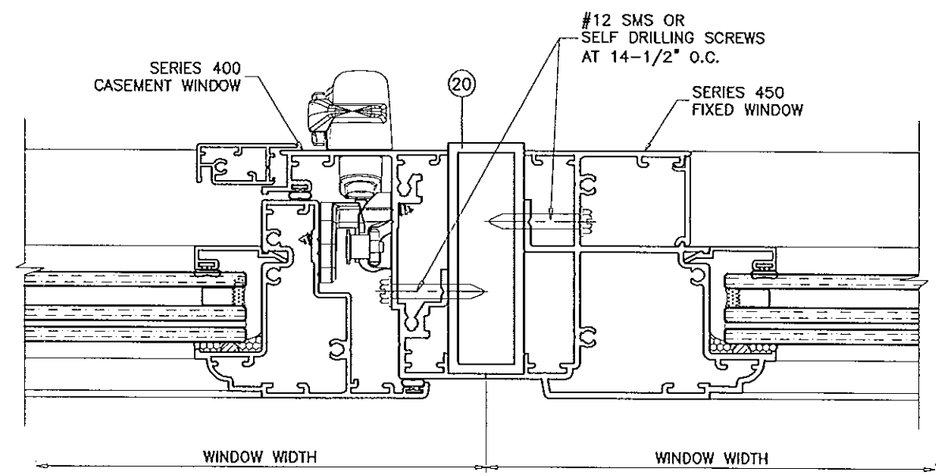

MULLION TYPE '2'

TOTAL PRPERTIES
Ix = 4.068 IN\4
Sx = 2.252 IN\3

Engr: JAVAD AHMAD
CIVIL
FLA. PE # 70592
C.A.N. 3538

AUG 26 2014

Approved as complying with the Florida Building Code
Date Dec 24, 2014
NOA# 14.0909.17
Miami Dade Product Control
By Manuel Perez

AL-FAROOQ CORPORATION
ENGINEERS & PRODUCT DEVELOPMENT
1235 S.W. 87 AVE
MIAMI, FLORIDA 33174
TEL. (305) 264-8100 FAX. (305) 262-6978

COMP-ANL\W14-28V

SERIES-400 ALUM P.O. CASEMENT WDW. (L.M.I.)

Labrador & Fundora Corp.
dba-V & V Windows
2355 West 4th Ave.
Hialeah, Fl. 33010
TEL. (305) 888-4151 FAX. (305) 888-1042

revisions:			
no	date	by	description

date: 08-20-14
scale: 1/2" = 1"
dr. by: HAMID
chk. by:

drawing no.
W14-28

sheet 6 of 6