MIAMI-DADE COUNTY
DEPARTMENT OF REGULATORY AND ECONOMIC RESOURCES (RER)
BOARD AND CODE ADMINISTRATION DIVISION

NOTICE OF ACCEPTANCE (NOA)

MIAMI-DADE COUNTY
PRODUCT CONTROL SECTION
11805 SW 26 Street, Room 208
T (786) 315-2590 F (786) 315-2599
www.miamidade.gov/economy

Coastal Innovative Products, Inc.
941 N. Alm Street Suite-C
Orange, CA. 92867

SCOPE:

This NOA is being issued under the applicable rules and regulations governing the use of construction materials. The documentation submitted has been reviewed and accepted by Miami-Dade County RER -Product Control Section to be used in Miami Dade County and other areas where allowed by the Authority Having Jurisdiction (AHJ).

This NOA shall not be valid after the expiration date stated below. The Miami-Dade County Product Control Section (In Miami Dade County) and/or the AHJ (in areas other than Miami Dade County) reserve the right to have this product or material tested for quality assurance purposes. If this product or material fails to perform in the accepted manner, the manufacturer will incur the expense of such testing and the AHJ may immediately revoke, modify, or suspend the use of such product or material within their jurisdiction. RER reserves the right to revoke this acceptance, if it is determined by Miami-Dade County Product Control Section that this product or material fails to meet the requirements of the applicable building code.

This product is approved as described herein, and has been designed to comply with the Florida Building Code, including the High Velocity Hurricane Zone.

DESCRIPTION: LANAI Series Aluminum Out folding Doors-L.M.I.

APPROVAL DOCUMENT: Drawing No. **CIP001 Rev C**, titled "E-3 Hurricane" Bi-folding Door", sheets 1 through 11 of 11, prepared by Building Drops Inc., dated 10/06/10 and last revised on 08-26-2015, signed and sealed by Hermes F. Norero, P.E., bearing the Miami-Dade County Product Control Revision stamp with the Notice of Acceptance number and expiration date by the Miami-Dade County Product Control Section.

MISSILE IMPACT RATING: Large and Small Missile Impact Resistant

Limitations:

1. See Design Pressure rating Vs sill type, in sheet 1.
2. See **Recess** threshold detail for Low Rise and Flush Sill into wood substrate and concrete substrate in sheet **11**.
3. Insulated glass interlayer "Sentryglas" by Kurrary America Inc. (Formally known DuPont De Nemours & Co.)
4. Steel stud installation to be reviewed by AHJ for structural adequacy and code requirements.

LABELING: Each unit shall bear a permanent label with the manufacturer's name or logo, city, state, model/series, and following statement: "Miami-Dade County Product Control Approved", unless otherwise noted herein.

RENEWAL of this NOA shall be considered after a renewal application has been filed and there has been no change in the applicable building code negatively affecting the performance of this product.

TERMINATION of this NOA will occur after the expiration date or if there has been a revision or change in the materials, use, and/or manufacture of the product or process. Misuse of this NOA as an endorsement of any product, for sales, advertising or any other purposes shall automatically terminate this NOA. Failure to comply with any section of this NOA shall be cause for termination and removal of NOA.

ADVERTISEMENT: The NOA number preceded by the words Miami-Dade County, Florida, and followed by the expiration date may be displayed in advertising literature. If any portion of the NOA is displayed, then it shall be done in its entirety.

INSPECTION: A copy of this entire NOA shall be provided to the user by the manufacturer or its distributors and shall be available for inspection at the job site at the request of the Building Official.

This NOA **revises NOA# 12-0326.10** and consists of this page 1 and evidence pages E-1, as well as approval document mentioned above.

The submitted documentation was reviewed by **Ishaq I. Chanda, P.E.**

MIAMI-DADE COUNTY APPROVED

10/27/15

NOTICE OF ACCEPTANCE: EVIDENCE SUBMITTED

A. DRAWINGS

1. Manufacturer's die drawings and sections (Submitted under files listed below)
2. Drawing No. **CIP002 Rev C**, titled "E-3 Hurricane" Bi-folding Door", sheets 1 through 11 of 11, prepared by Building Drops Inc., dated 10/06/10 and last revised on 08-26-2015, signed and sealed by Hermes F. Norero, P.E.

B. TESTS (Submitted under files **#12-0326.09/#10-1019.02**)

1. Test reports on: 1) Air Infiltration Test, per FBC, TAS 202-94
   2) Uniform Static Air Pressure Test, Loading per FBC TAS 202-94
   3) Water Resistance Test, per FBC, TAS 202-94 (Not conducted)
   4) Large Missile Impact Test per FBC, TAS 201-94
   5) Cyclic Wind Pressure Loading per FBC, TAS 203-94
   6) Forced Entry Test, per FBC 2411 3.2.1, TAS 202-94

along with marked-up drawings and installation diagram of Infolding aluminum doors, prepared by Architectural Testing, Test Report No. **A0896.02-301-18**, dated 09/29/10, signed and sealed by Joseph A. Reed, P. E.

Additional Referenced test report, along w/ marked-up drawings and installation diagram of out folding aluminum doors, prepared by Architectural Testing, Test Report No. **A0896.01-301-18**, dated 09/29/10, signed and sealed by Joseph A. Reed, P. E., this outfolding was supplemented by an addendum letter dtd 02/01/11 by Architectural Testing, signed and sealed by Joseph A. Reed, P. E.

C. CALCULATIONS

1. Anchor verification calculations and comparative analysis complying with FBC-2014(5th Edition) and "No financial interest", prepared by Building Drops Inc., dated 08/26/15, signed and sealed by Hermes F. Norero, P.E
2. Glazing complies w/ ASTME-1300-02, -04 &-09

D. QUALITY ASSURANCE

1. Miami–Dade Department of Regulatory and Economic Resources (RER).

E. MATERIAL CERTIFICATIONS

1. Notice of Acceptance No. **14-0916.11** issued to **Kuraray America, Inc.** (Former E.I. DuPont DeNemours & Co., Inc. for the "**Sentry Glass ® (Clear and White) Glass Interlayers**", expiring on 07/04/18.
2. Thermoplastic properties of Santoprene 101-64 per ASTMD 412, ASTMD 395, ASTMD 624 and ASTM D 792 (Submitted under file **#10-1019.02**)

F. STATEMENTS

1. Statement letter of conformance to FBC 2014(5th Edition), prepared by Building Drops Inc., dated 07/11/14 , signed and sealed by Hermes F. Norero, P.E
2. Lab compliance as part of the above referenced test report.

G. OTHER

1. This NOA **revises** NOA **#12-0326.09**, expiring on 07/21/16.
2. Test proposal **#10-0393**, dated June 14, 2010, approved by BCCO.

Ishaq I. Chanda

Ishaq I. Chanda, P.E.
Product Control Examiner
NOA No. 14-0910.08
Expiration Date: July 21, 2016
Approval Date: November 05, 2015

COASTAL INNOVATIVE PRODUCTS

LANAI SERIES E3 HURRICANE
OUTWARD OPENING BI-FOLD DOOR

INSTALLATION NOTES:

1. ONE (1) INSTALLATION ANCHOR IS REQUIRED AT EACH ANCHOR LOCATION SHOWN. (SEE ANCHOR LAYOUT SHEETS 2 - 4)
2. THE NUMBER OF INSTALLATION ANCHORS DEPICTED IS THE MINIMUM NUMBER OF ANCHORS TO BE USED FOR PRODUCT INSTALLATION.
3. INSTALL INDIVIDUAL INSTALLATION ANCHORS WITHIN A TOLERANCE OF ±1/16 INCH OF THE DEPICTED LOCATION IN THE ANCHOR LAYOUT DETAIL (I.E., WITHOUT CONSIDERATION OF TOLERANCES). TOLERANCES ARE NOT CUMULATIVE FROM ONE INSTALLATION ANCHOR TO THE NEXT.
4. SHIM AS REQUIRED AT EACH INSTALLATION ANCHOR WITH LOAD BEARING SHIM(S). MAXIMUM ALLOWABLE SHIM STACK TO BE 1/4 INCH. SHIM WHERE SPACE OF 1/16 INCH OR GREATER OCCURS. SHIM(S) SHALL BE CONSTRUCTED OF HIGH DENSITY PLASTIC OR BETTER.
5. FOR INSTALLATION INTO WOOD FRAMING USE #14 WOOD SCREWS (MIN. F_{yb}= 80 KSI) OF SUFFICIENT LENGTH TO ACHIEVE 2 INCH MINIMUM EMBEDMENT INTO WOOD SUBSTRATE WITH MINIMUM 1 INCH EDGE DISTANCE.
6. FOR INSTALLATION THROUGH 1X BUCK TO CONCRETE/MASONRY, OR DIRECTLY INTO CONCRETE/MASONRY, USE 1/4 INCH DIAMETER ITW TAPCONS OF SUFFICIENT LENGTH TO ACHIEVE 1 3/4 INCH MINIMUM EMBEDMENT AND WITH MINIMUM 2-1/2 INCH EDGE DISTANCE.
7. FOR INSTALLATION INTO 33 KSI STEEL STUD USE ¼"-14 TEKS SELCET, ELCO DRIL-FLEX, OR HILTI KWIK-FLEX SCREWS (GRADE 5), OF SUFFICIENT LENGTH TO ACHIEVE THREE (3) THREADS MINIMUM PENETRATION BEYOND THE STEEL STRUCTURE.
8. MINIMUM EMBEDMENT AND EDGE DISTANCE EXCLUDE WALL FINISHES, INCLUDING BUT NOT LIMITED TO STUCCO, FOAM, BRICK VENEER, AND SIDING.
9. INSTALLATION ANCHORS AND ASSOCIATED HARDWARE MUST BE MADE OF CORROSION RESISTANT MATERIAL OR HAVE A CORROSION RESISTANT COATING.
10. FOR GROUT FILLED BLOCK, DO NOT INSTALL INSTALLATION ANCHORS INTO MORTAR JOINTS. EDGE DISTANCE IS MEASURED FROM FREE EDGE OF BLOCK OR EDGE OF MORTAR JOINT INTO FACE SHELL OF BLOCK.
11. INSTALLATION ANCHORS SHALL BE INSTALLED IN ACCORDANCE WITH ANCHOR MANUFACTURER'S INSTALLATION INSTRUCTIONS, AND ANCHORS SHALL NOT BE USED IN SUBSTRATES WITH STRENGTHS LESS THAN THE MINIMUM STRENGTH SPECIFIED IN THIS APPROVAL.
12. INSTALLATION ANCHOR CAPACITIES FOR PRODUCTS HEREIN ARE BASED ON SUBSTRATE MATERIALS WITH THE FOLLOWING PROPERTIES:
    A. WOOD - MINIMUM SPECIFIC GRAVITY OF 0.55.
    B. CONCRETE -MINIMUM COMPRESSIVE STRENGTH OF 3000 PSI.
    C. GROUT-FILLED CMU- UNIT STRENGTH CONFORMS TO ASTM C-90 AND GROUT CONFORMS TO ASTM C 476, MINIMUM GROUT COMPRESSIVE STRENGTH OF 2000 PSI.
    D. STEEL - MINIMUM YIELD STRENGTH OF 33 KSI. MINIMUM WALL THICKNESS OF 33 MILS (20 GAUGE OR 0.033 IN.) MUST BE DESIGNED TO ADEQUATELY TRANSFER LOADS APPLIED.
13. THRESHOLD/SILL INSTALLATION: FLUSH GUIDE SILL (DETAIL D/5) & LOW-RISE SILL (DETAIL K/6) ARE LIMITED TO INSTALLATIONS AS SHOWN ON SHEET 11 INTO WOOD OR CONCRETE SUBSTRATES.

GENERAL NOTES:

1. THE PRODUCT SHOWN HEREIN IS DESIGNED AND MANUFACTURED TO COMPLY WITH THE 5TH EDITION FLORIDA BUILDING CODE (FBC), INCLUDING HVHZ AND HAS BEEN EVALUATED ACCORDING TO THE FOLLOWING:
    - TAS 201-94
    - TAS 202-94
    - TAS 203-94
2. ADEQUACY OF THE EXISTING STRUCTURAL CONCRETE/MASONRY AND 2X FRAMING AS A MAIN WIND FORCE RESISTING SYSTEM CAPABLE OF WITHSTANDING AND TRANSFERRING APPLIED PRODUCT LOADS TO THE FOUNDATION IS THE RESPONSIBILITY OF THE ENGINEER OR ARCHITECT OF RECORD FOR THE PROJECT OF INSTALLATION.
3. 1X AND 2X BUCKS (WHEN USED) SHALL BE DESIGNED AND ANCHORED TO PROPERLY TRANSFER ALL LOADS TO THE STRUCTURE. BUCK DESIGN AND INSTALLATION IS THE RESPONSIBILITY OF THE ENGINEER OR ARCHITECT OF RECORD FOR THE PROJECT OF INSTALLATION.
4. THE INSTALLATION DETAILS DESCRIBED HEREIN ARE GENERIC AND MAY NOT REFLECT ACTUAL CONDITIONS FOR A SPECIFIC SITE. IF SITE CONDITIONS CAUSE INSTALLATION TO DEVIATE FROM THE REQUIREMENTS DETAILED HEREIN, A LICENSED ENGINEER OR ARCHITECT SHALL PREPARE SITE SPECIFIC DOCUMENTS FOR USE WITH THIS DOCUMENT. FOR NON-HVHZ AREA, INSTALLATION TO BE REVIEWED BY AHJ (AUTHORITY HAVING JURISDICTION).
5. DEVIATION FROM THE APPROVED NOA IN HVHZ AREA REQUIRE A ONE TIME APPROVAL FROM MIAMI-DADE COUNTY.
6. APPROVED IMPACT PROTECTIVE SYSTEM IS NOT REQUIRED ON THIS PRODUCT IN AREAS REQUIRING IMPACT RESISTANCE.
7. DOOR FRAME MATERIAL: ALUMINUM 6063-T5
8. GLASS MEETS THE REQUIREMENTS OF ASTM E 1300 GLASS CHARTS. SEE SHEET 6 FOR GLAZING DETAILS.
9. SILICONE SEALANT TO BE APPLIED BETWEEN GLASS AND FRAME AND BETWEEN FRAME CORNERS AND PANEL CORNERS.
10. FOR INSTALLATION OF LOW-RISE AND FLUSH SILL 2X8 WOOD BUCK OR CONCRETE MUST BE RECESSED AND/OR ROUTED TO ACCOMMODATE THESE COMPONENTS PRIOR TO INSTALLATION.

TABLE OF CONTENTS

SHEET	REVISION	SHEET DESCRIPTION
1	C	INSTALLATION & GENERAL NOTES
2	C	ELEVATION & ANCHOR LAYOUT
3	C	ELEVATION & ANCHOR LAYOUT
4	C	ELEVATION & ANCHOR LAYOUT
5	C	VERTICAL SECTIONS
6	C	VERTICAL SECTIONS & GLAZING DETAILS
7	C	HORIZONTAL SECTIONS
8	C	COMPONENTS & BILL OF MATERIALS
9	C	COMPONENTS
10	C	CORNER DETAILS & CONFIGURATIONS
11	C	INSTALLATION PREPARATION DETAILS

DESIGN PRESSURE RATING

GLAZE TYPE	DESIGN PRESSURE		MISSLE IMPACT RATING
1 & 2	+55.0 / -55.0 PSF	W/ WATER INFILTRATION (STANDARD SILL ONLY)	LARGE AND SMALL MISSILE IMPACT RATED
	+70.0 / -70.0 PSF *	W/O WATER INFILTRATION (STANDARD, FLUSH, & LOW RISE SILL)	

*UNIT SHALL BE INSTALLED AT LOCATION PROTECTED BY OVERHANG SUCH THE OVERHANG RATIO (OH) = OH LENGTH/OH HEIGHT GREATER THAN 1.0 WHERE WATER INFILTRATION IS REQUIRED.

LANAI DOORS
COASTAL INNOVATIVE PRODUCTS
941 NORTH ELM STREET, STE. C
ORANGE, CA 92867
PH: (714) 744-6020 FX: (714) 744-6030

TITLE: E3 HURRICANE BIFOLD DOOR INSTALLATION & GENERAL NOTES

PREPARED BY:
BUILDING DROPS, INC.
398 E. DANIA BEACH BLVD., STE. 338
DANIA BEACH, FL 33004
PH: (954) 399-8478 FX: (954) 744-4738

REVISIONS

NO.	DESCRIPTION	BY	DATE
A	2010 FBC CODE UPDATE	MS	2.21.12
B	5TH EDITION FBC CODE UPDATE	MS	7.11.14
C	MD RER COMMENTS	SM	7.28.15

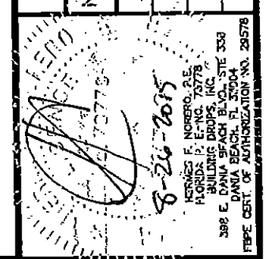

DATE: 10.6.10
DWN BY: JLA
CHK BY: KSD
SCALE: NTS

PRODUCT REVISED as complying with the Florida Building Code
Acceptance No 14-0910.09
Expiration Date July 21, 2016
By Ishwar L. Khanna
Miami-Dade Product Control

DWG #: CIP001

SHEET: 1 OF 11

7/29/2015 11:58 AM

s:\jonly-crt\coastal innovative products\md-15-0119 rev 12-0326.09\15-10 additional comments\dwgs\cip001.ccadfr 2004.dwg

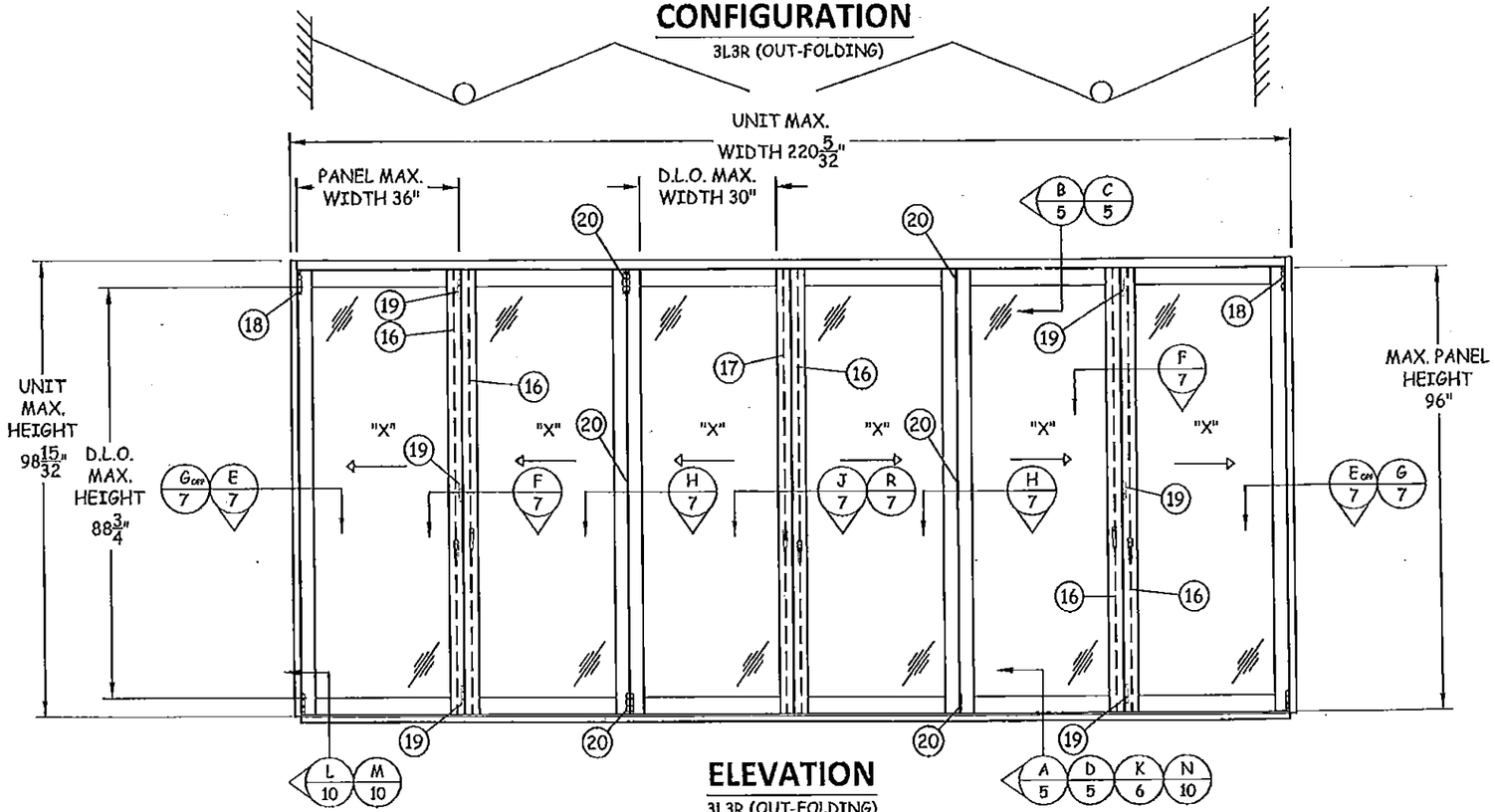

LANAI DOORS

COASTAL INNOVATIVE PRODUCTS
941 NORTH ELM STREET, STE. C
ORANGE, CA 92867
PH: (714) 744-6020 FX: (714) 744-6030

TITLE:
E3 HURRICANE BIFOLD DOOR
ELEVATION &
ANCHOR LAYOUT

PREPARED BY:
BUILDING DROPS, INC.
398 E. DANIA BEACH BLVD., STE. 338
DANIA BEACH, FL 33004
PH: (954) 399-8478 FX: (954) 744-4738

REVISIONS

NO.	DESCRIPTION	BY	DATE
A	2010 FBC CODE UPDATE	MS	2.21.12
B	5TH EDITION FBC CODE UPDATE	MS	7.11.14
C	MD RER COMMENTS	SM	7.28.15

HERMES F. NORERO, P.E.
FLORIDA P. E. NO. 73778
BUILDING DROPS, INC.
398 E. DANIA BEACH BLVD., STE. 338
DANIA BEACH, FL 33004
FBPE CERT. OF AUTHORIZATION NO. 23578

8-26-2015

PRODUCT REVISED
as complying with the Florida Building Code
Acceptance No. 14-0910.09
Expiration Date 7/21/16
By Ishwaj I. Chandra
Local Code Product Control

DATE: 10.6.10
DWN BY: JLA
CHK BY: KSD
SCALE: NTS

DWG #: CIP001

SHEET: 2 OF 11

CONFIGURATION

2L4R (OUT-FOLDING)

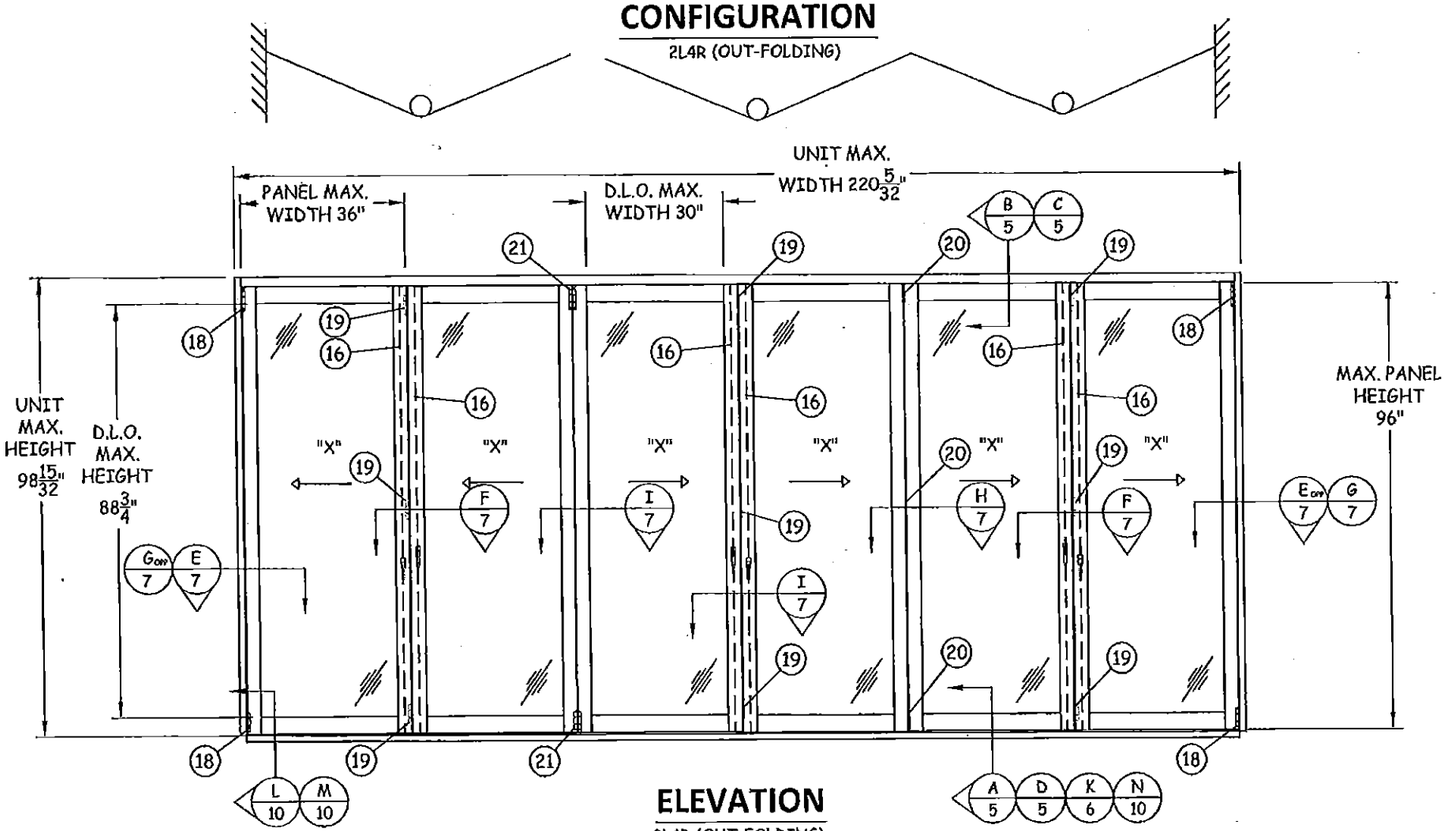

ELEVATION

2L4R (OUT-FOLDING)

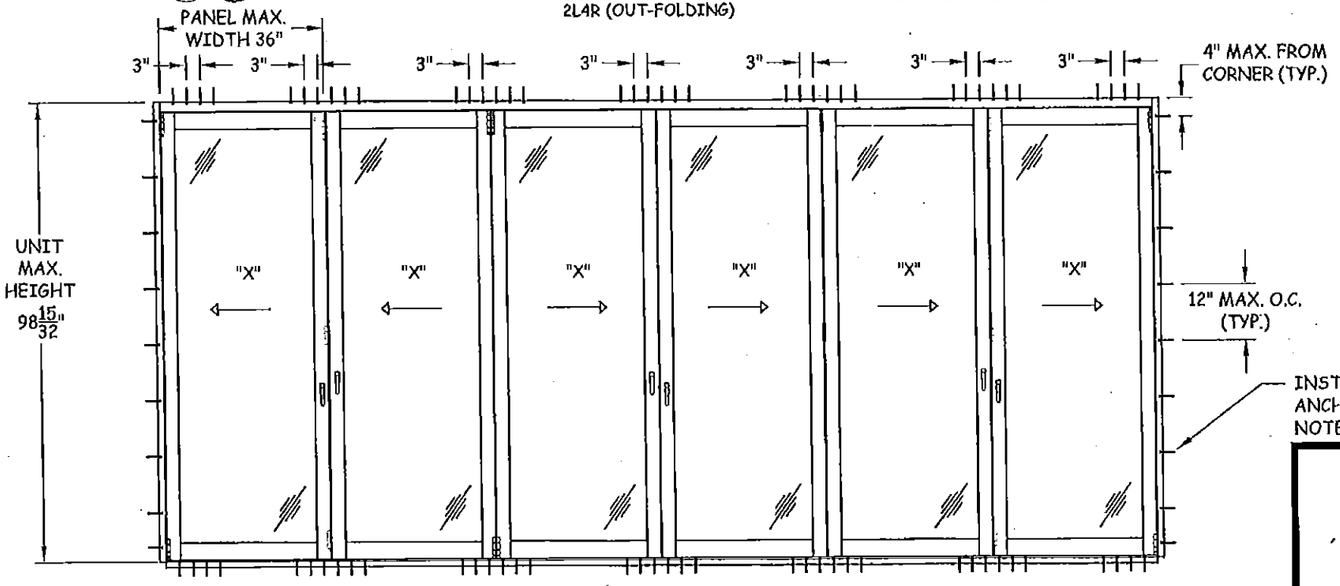

ANCHOR LAYOUT

2L4R (OUT-FOLDING)

PRODUCT REVISED
to complying with the Florida Building Code
Acceptance No. 14-0910.09
Revision Date 7/21/16
Product Control

LANAI DOORS

COASTAL INNOVATIVE PRODUCTS
941 NORTH ELM STREET, STE. C
ORANGE, CA 92867
PH: (714) 744-6020 FX: (714) 744-6030

TITLE: E3 HURRICANE BIFOLD DOOR ELEVATION & ANCHOR LAYOUT

PREPARED BY:
BUILDING DROPS, INC.
398 E. DANIA BEACH BLVD., STE. 338
DANIA BEACH, FL 33004
PH: (954) 399-8478 FX: (954) 744-4738

REVISIONS

NO.	DESCRIPTION	BY	DATE
A	2010 FBC CODE UPDATE	MS	2.21.12
B	5TH EDITION FBC CODE UPDATE	MS	7.11.14
C	MD RER COMMENTS	SM	7.28.15

HERMES F. ROMERO, P.E. FLORIDA REG. NO. 73778 STATE OF FLORIDA
HERMES F. ROMERO, P.E. FLORIDA REG. NO. 73778 BUILDING DROPS, INC. 398 E. DANIA BEACH BLVD., STE. 338 DANIA BEACH, FL 33004 FIRM DEPT. OF AUTHORIZATION NO: 25978
8-26-2015

DATE:	DWN BY:	CHK BY:	SCALE:
10.6.10	JLA	KSD	NTS

DWG #: CIP001

SHEET: 3 OF 11

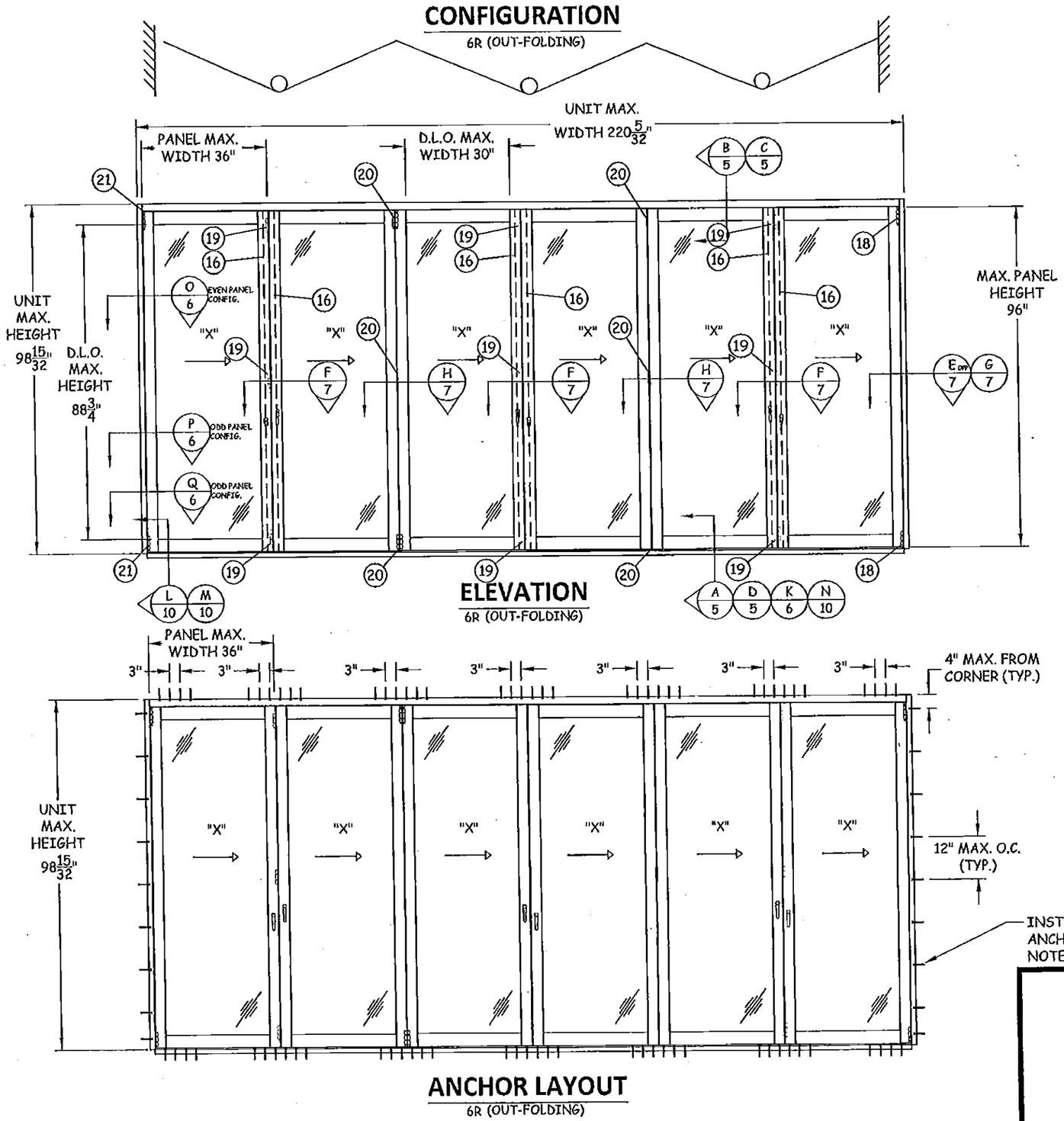

LANAI DOORS

COASTAL INNOVATIVE PRODUCTS
941 NORTH ELM STREET, STE. C
ORANGE, CA 92867
PH: (714) 744-6020 FX: (714) 744-6030

TITLE:
E3 HURRICANE BIFOLD DOOR
ELEVATION &
ANCHOR LAYOUT

PREPARED BY:
BUILDING DROPS, INC.
398 E. DANIA BEACH BLVD., STE. 338
DANIA BEACH, FL 33004
PH: (954) 399-8478 FX: (954) 744-4738

REVISIONS

NO.	DESCRIPTION	BY	DATE
A	2010 FBC CODE UPDATE	MS	2.21.12
B	5TH EDITION FBC CODE UPDATE	MS	7.11.14
C	MD RER COMMENTS	SM	7.28.15

HERMES F. NORERO, P.E.
FLORIDA P. E. NO. 73773
BUILDING DROPS, INC.
398 E. DANIA BEACH BLVD., STE. 338
DANIA BEACH, FL 33004
PROFESSIONAL ENGINEER
8-26-2015
FBPE CERT. OF AUTHORIZATION NO. 25578

PRODUCT REVISED
as complying with the Florida Building Code
Acceptance No. 14-0910.09
Expiration Date 7/21/16
By Ishaq Chanda
Miami Dade Product Control

DATE: 10.6.10
DWN BY: JLA
CHK BY: KSD
SCALE: NTS

DWG #: CIP001

SHEET: 4 OF 11

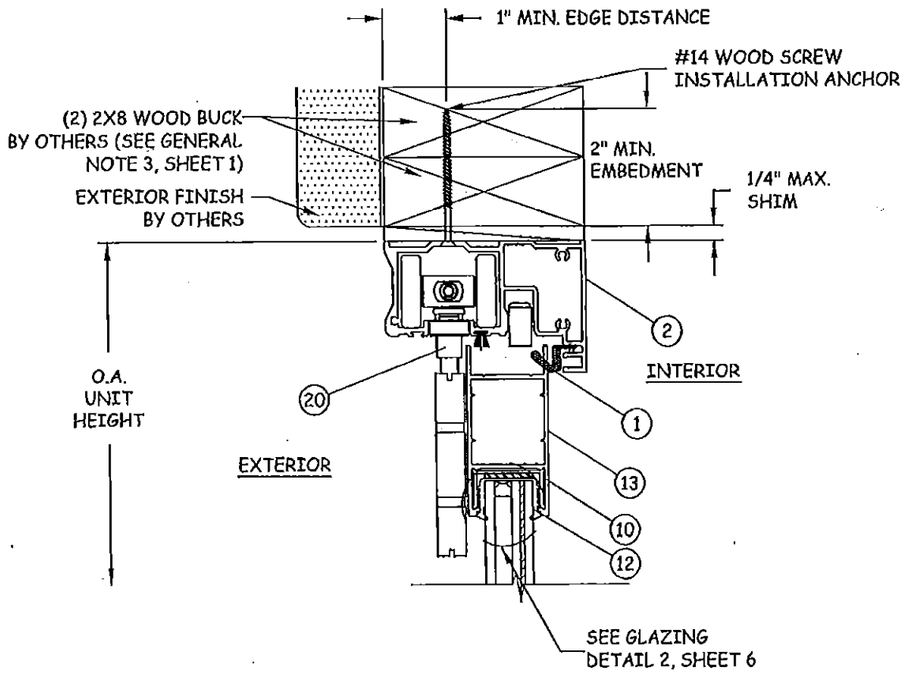

B/5 **VERTICAL SECTION**
HEAD - 2X WOOD FRAME

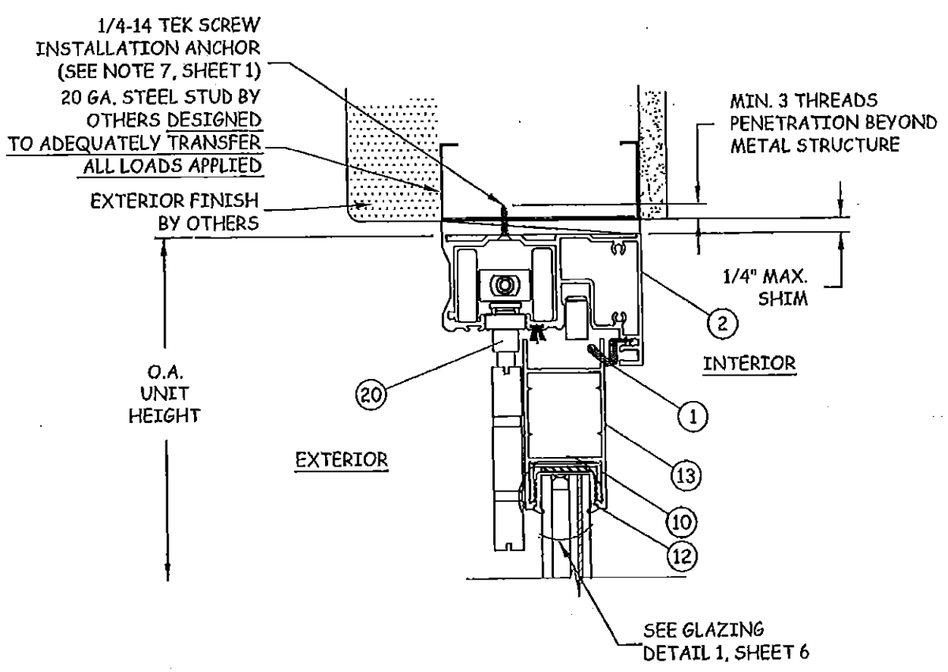

C/5 **VERTICAL SECTION**
HEAD - STEEL STUD

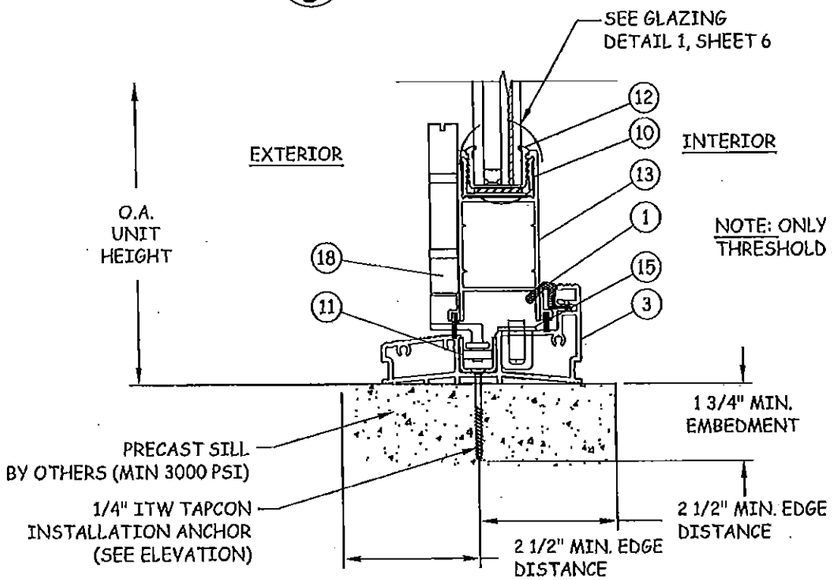

A/5 **VERTICAL SECTION**
SILL - CONCRETE/MASONRY
STANDARD THRESHOLD

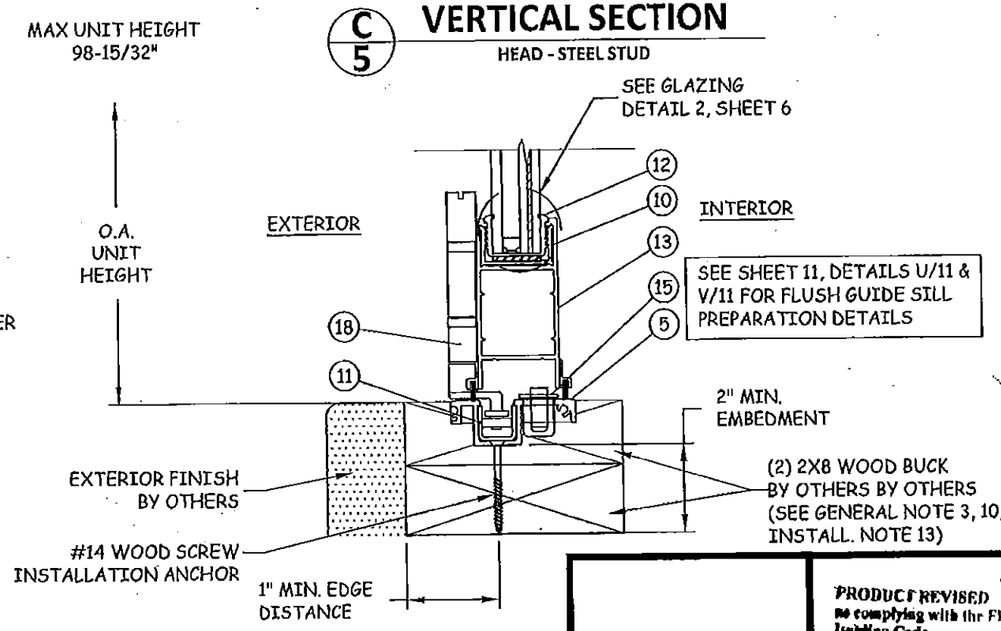

D/5 **VERTICAL SECTION**
SILL - 2X WOOD FRAME
FLUSH GUIDE THRESHOLD

PRODUCT REVISED
to complying with the Florida Building Code
Acceptance No. 14-0910.07
Expiration Date 7/2/16
By [signature]
Miami-Dade Product Control

LANAI DOORS
COASTAL INNOVATIVE PRODUCTS
941 NORTH ELM STREET, STE. C
ORANGE, CA 92867
PH: (714) 744-6020 FX: (714) 744-6030

TITLE:
E3 HURRICANE BIFOLD DOOR
VERTICAL SECTIONS

PREPARED BY:
BUILDING DROPS, INC.
398 E. DANIA BEACH BLVD., STE. 338
DANIA BEACH, FL 33004
PH: (954) 399-8478 FX: (954) 744-4738

REVISIONS

NO.	DESCRIPTION	BY	DATE
A	2010 FBC CODE UPDATE	MS	2.21.12
B	5TH EDITION FBC CODE UPDATE	MS	7.11.14
C	MD RER COMMENTS	SM	7.28.15

JAMES F. NORENG, P.E.
FLORIDA REG. NO. 29578
STATE OF FLORIDA
BUILDING DROPS, INC.
398 E. DANIA BEACH BLVD., STE. 338
DANIA BEACH, FL 33004
FBPE CERT. OF AUTHORIZATION NO. 29578

DATE: 10.6.10
DWN BY: JLA
CHK BY: KSD
SCALE: NTS

DWG #: CIP001

SHEET: 5 OF 11

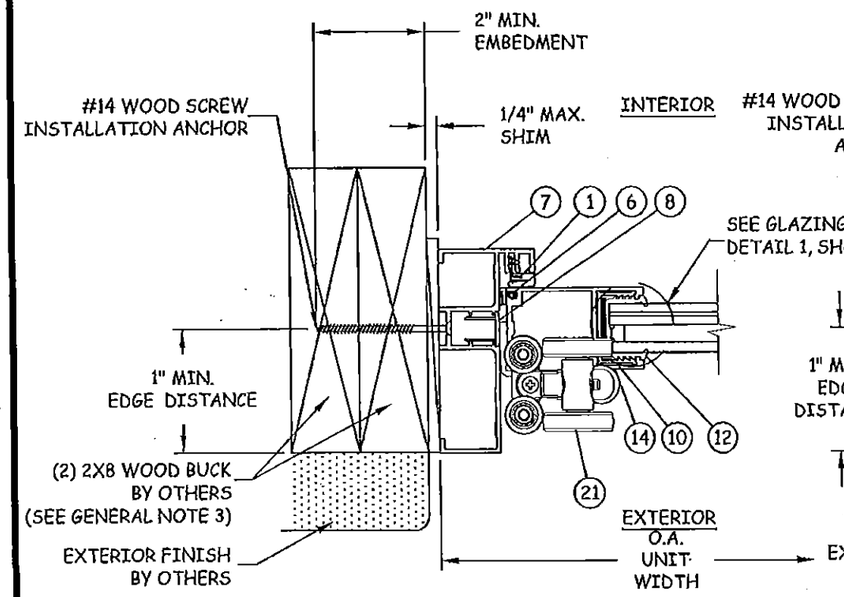

O/6 HORIZONTAL SECTION

JAMB - 2X WOOD FRAME

END CARRIER TO JAMB

(ONLY ON EVEN NUMBER CONFIGURATIONS, SEE SCHEDULE SHEET 10)

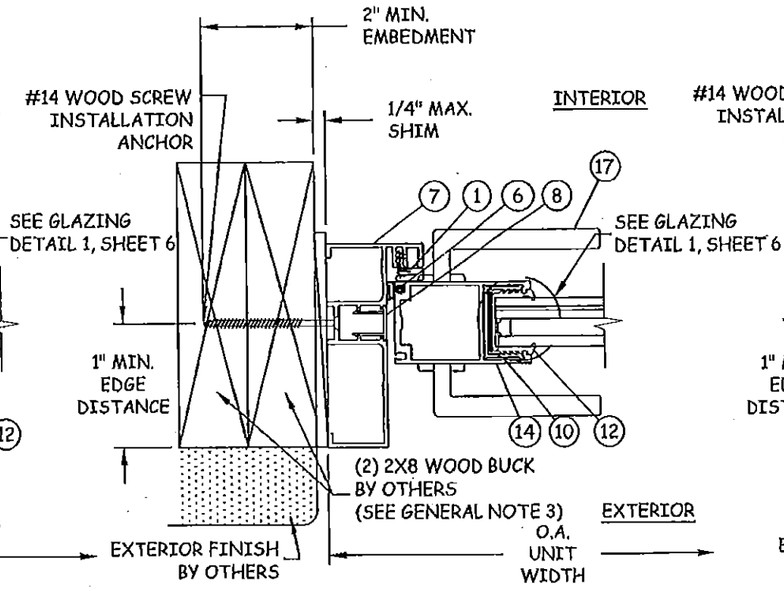

P/6 HORIZONTAL SECTION

JAMB - 2X WOOD FRAME

MULTI POINT LOCK TO JAMB

(ONLY ON ODD NUMBER CONFIGURATIONS, SEE SCHEDULE SHEET 10)

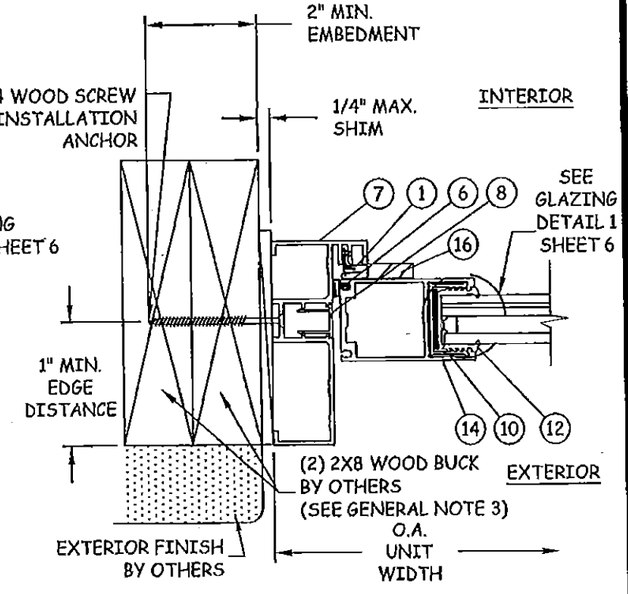

Q/6 HORIZONTAL SECTION

JAMB W/ 2-PT. LOCK - 2X WOOD FRAME

TWIN BOLT LOCK TO JAMB

(ONLY ON ODD NUMBER CONFIGURATIONS, SEE SCHEDULE SHEET 10)

SEE SHEET 11, DETAILS S/11 & T/11 FOR LOWRISE SILL PREPARATION DETAILS

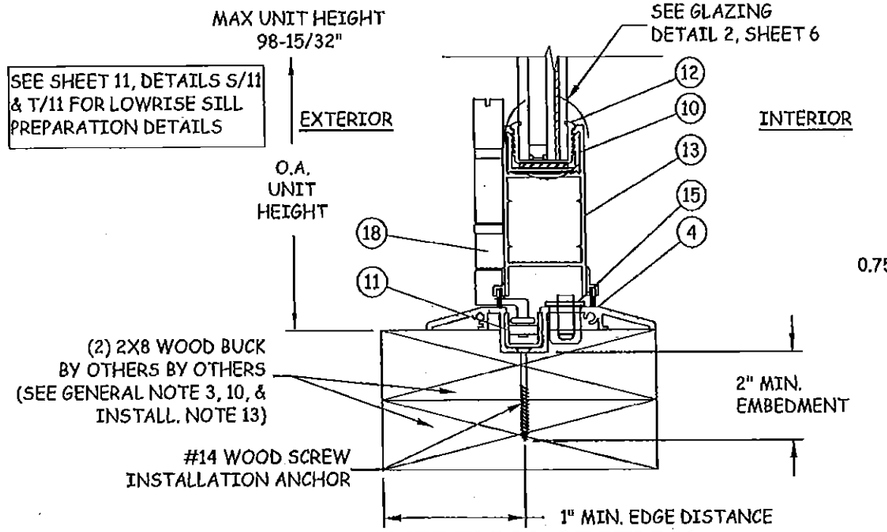

K/6 VERTICAL SECTION

SILL-2X WOOD FRAME

LOWRISE THRESHOLD

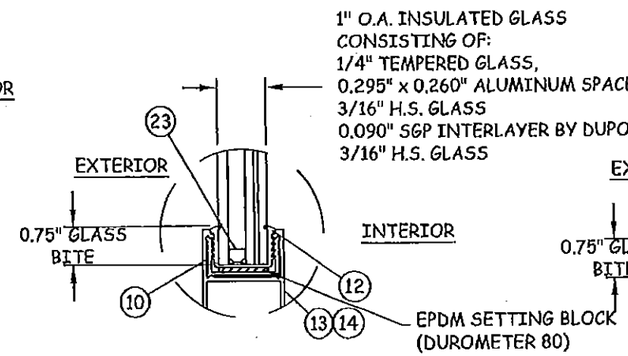

DRY GLAZING DETAIL 2

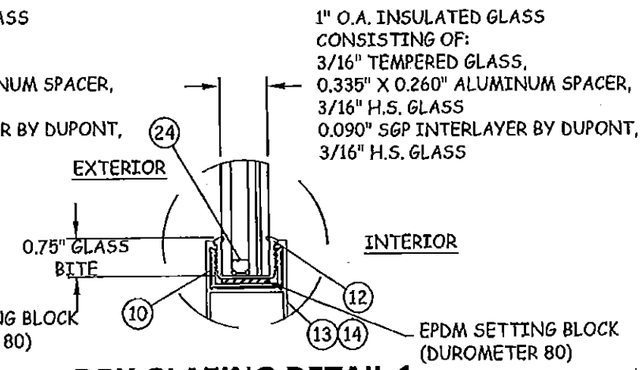

DRY GLAZING DETAIL 1

NOTE: GE II SILICONE REQUIRED BETWEEN GLASS AND FRAME WHERE WATER INFILTRATION IS REQUIRED.

PRODUCT REVISED
as complying with the Florida Building Code
Acceptance No. 14-0910.09
Expiration Date 7/21/16
By Ishag Lilbaud
Miami Dade Product Control

LANAI DOORS

COASTAL INNOVATIVE PRODUCTS
941 NORTH ELM STREET, STE. C
ORANGE, CA 92867
PH: (714) 744-6020 FX: (714) 744-6030

TITLE: E3 HURRICANE BIFOLD DOOR VERTICAL SECTIONS & GLAZING DETAILS

PREPARED BY: BUILDING DROPS, INC.
398 E. DANIA BEACH BLVD., STE. 338
DANIA BEACH, FL 33004
PH: (954) 399-8478 FX: (954) 744-4738

REVISIONS

NO.	DESCRIPTION	BY	DATE
A	2010 FBC CODE UPDATE	MS	2.21.12
B	5TH EDITION FBC CODE UPDATE	MS	7.11.14
C	MD RER COMMENTS	SM	7.28.15

HERMES F. NORERO, P.E. FLORIDA P. E. NO. 73278 BUILDING DROPS, INC. 398 E. DANIA BEACH BLVD., STE. 338 DANIA BEACH, FL 33004 FBPE CERT. OF AUTHORIZATION NO. 29578

8-26-2015

DATE: 10.6.10 | DWN BY: JLA | CHK BY: KSD | SCALE: NTS

DWG #: CIP001

SHEET: 6 OF 11

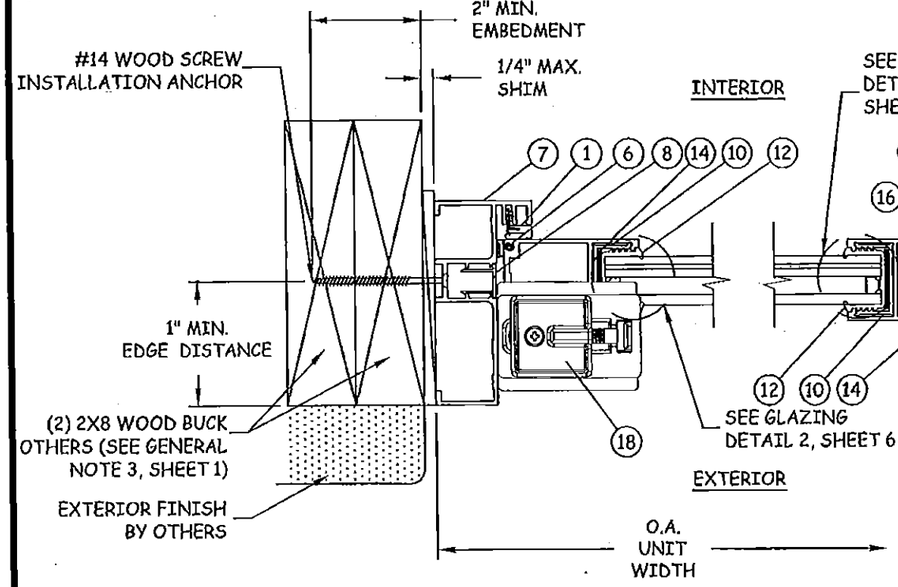

E/7 HORIZONTAL SECTION
JAMB - 2X WOOD BUCK

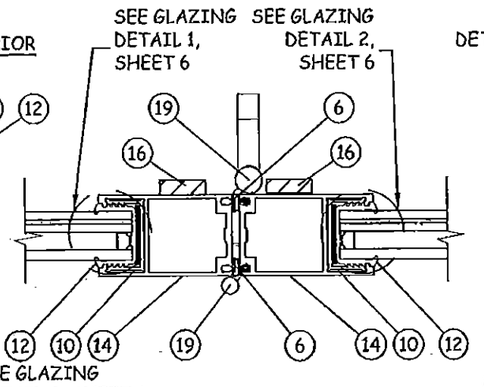

F/7 HORIZONTAL SECTION
HHS/HS & TWIN BOLTS

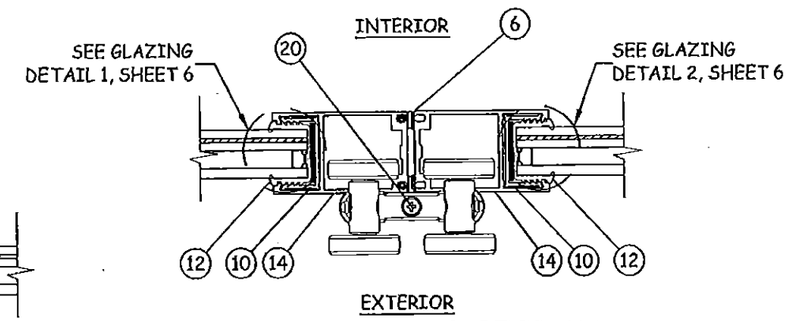

H/7 HORIZONTAL SECTION
ICS

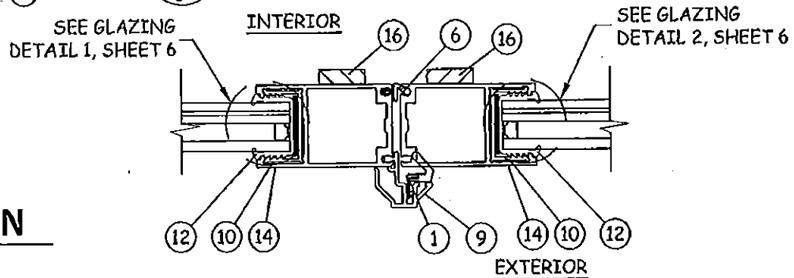

R/7 HORIZONTAL SECTION
DOUBLE TWIN BOLT

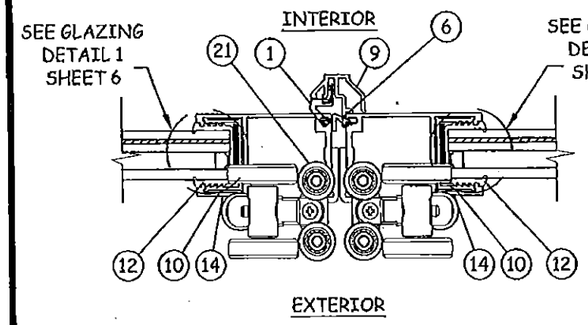

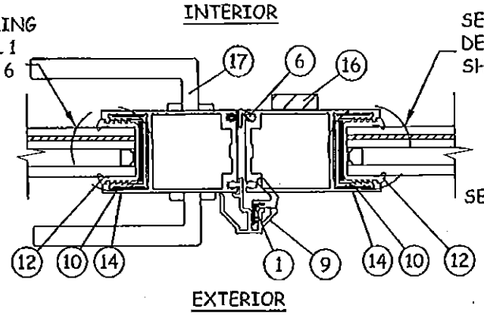

J/7 HORIZONTAL SECTION
4 POINT DOOR HANDLE & TWIN BOLT

I/7 HORIZONTAL SECTION
RCS/LCS

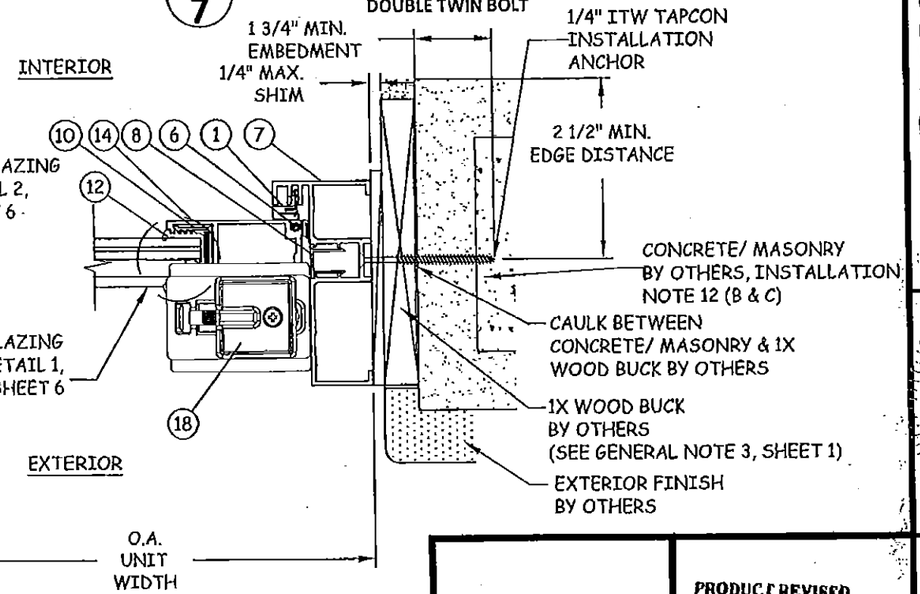

G/7 HORIZONTAL SECTION
JAMB - CONCRETE/MASONRY

LANAI DOORS
COASTAL INNOVATIVE PRODUCTS
941 NORTH ELM STREET, STE. C
ORANGE, CA 92867
PH: (714) 744-6020 FX: (714) 744-6030

TITLE:
E3 HURRICANE BIFOLD DOOR
HORIZONTAL SECTIONS

PREPARED BY:
BUILDING DROPS, INC.
398 E. DANIA BEACH BLVD., STE. 338
DANIA BEACH, FL 33004
PH: (954) 399-8478 FX: (954) 744-4738

REVISIONS

NO.	DESCRIPTION	BY	DATE
A	2010 FBC CODE UPDATE	MS	2.21.12
B	5TH EDITION FBC CODE UPDATE	MS	7.1.14
C	MD RER COMMENTS	SM	7.28.15

PRODUCT REVISED
as complying with the Florida Building Code
Acceptance No. 14-0910.05
Expiration Date 7/21/16
By: Product Control

DATE: 10.6.10
DWN BY: JLA
CHK BY: KSD
SCALE: NTS

DWG #: CIP001
SHEET: 7 OF 11

BILL OF MATERIALS				
ITEM NO.	DESCRIPTION	PART NUMBER	MATERIAL	MANUFACTURER
1	DOOR SEAL	QEBD 650	Q-LON	SCHLEGEL
2	HEADER		AL. 6063-T5	COASTAL INNOVATIVE PRODUCTS
3	STD. THRESHOLD		AL. 6063-T5	COASTAL INNOVATIVE PRODUCTS
4	LOWRISE THRESHOLD		AL. 6063-T5	COASTAL INNOVATIVE PRODUCTS
5	FLUSH GUIDE THRESHOLD		AL. 6063-T5	COASTAL INNOVATIVE PRODUCTS
6	WETAHERSEAL	QWS-DH1	Q-LON	SCHLEGEL
7	JAMB		AL. 6063-T5	COASTAL INNOVATIVE PRODUCTS
8	JAMB COVER		AL. 6063-T5	COASTAL INNOVATIVE PRODUCTS
9	ASTRAGAL		AL. 6063-T5	COASTAL INNOVATIVE PRODUCTS
10	GLAZING CLIP		AL. 6063-T5	COASTAL INNOVATIVE PRODUCTS
11	THRESHOLD INSERT		RIGID PVC	COASTAL INNOVATIVE PRODUCTS
12	DRY GLAZING GASKET		SANTOPRENE 101-64 TPV/TPE DUROMETER=64	COASTAL INNOVATIVE PRODUCTS (RAW MATERIAL BY EXXON MOBIL CHEMICAL CO.)
13	DOOR RAIL		AL. 6063-T5	COASTAL INNOVATIVE PRODUCTS
14	DOOR STILE		AL. 6063-T5	COASTAL INNOVATIVE PRODUCTS
15	DOUBLE SHOOT BOLT CUPS		ZYTEL 70G33L NC010	
16	TWO PT. LOCK	TBL NL L/THROW	ZINC ALLOY	INTERLOCK
17	FOUR PT. LOCK	LCL 30R4PS	ZINC ALLOY	INTERLOCK
18	PIVOT	E3 CPS	STAINLESS STEEL	CENTOR
19	HINGES	E3 HS/ HHS/ HHNHS/ HNHS/ HHNH /HNH	STAINLESS STEEL	CENTOR
20	ICS	E3 CRCS/CLCS	STAINLESS STEEL	CENTOR
21	END CARRIER RCS/LCS	E3 CICS	STAINLESS STEEL	CENTOR
22	MIDRAIL		AL. 6063-T5	COASTAL INNOVATIVE PRODUCTS
23	0.295" I.G. SPACER	756	AL. 6063-0	HELIMA
24	0.335" I.G. SPACER	856	AL. 6063-0	HELIMA

1 FRAME SEAL
Q-LON

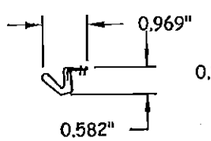

2 HEADER
AL. 6063-T5

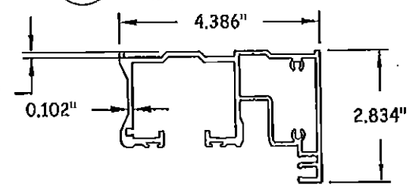

3 STANDARD THRESHOLD
AL. 6063-T5

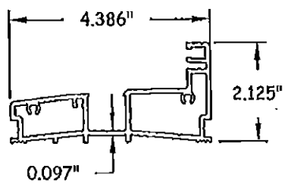

4 LOWRISE THRESHOLD
AL. 6063-T5

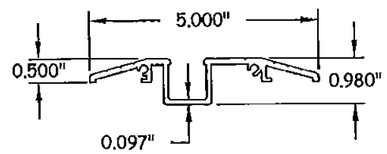

5 FLUSH GUIDE THRESHOLD
AL. 6063-T5

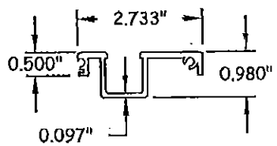

6 DOOR SEAL
Q-LON

7 JAMB
AL. 6063-T5

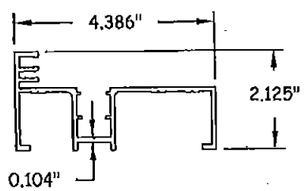

8 JAMB COVER
AL. 6063-T5

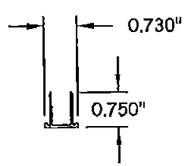

9 ASTRAGAL
AL. 6063-T5

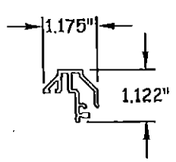

10 GLAZING CLIP
AL. 6063-T5

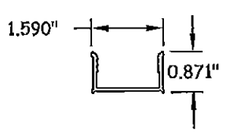

11 THRESHOLD INSERT
RIGID PVC

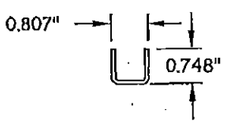

12 DRY GLAZING GASKET
SANTOPRENE 101-64

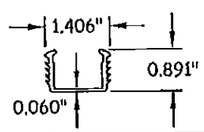

1. MIN. DUROMETER (SHORE A HARDNESS) = 64
2. MIN. TENSILE STRENGTH @ BREAK= 1020 PSI
3. COMPRESSION SET= 26%
4. TEAR STRENGTH= 131 LBF/IN
5. ELONGATION %= 340-463
6. SPECIFIC GRAVITY= MIN. 0.96

LANAI DOORS
COASTAL INNOVATIVE PRODUCTS
941 NORTH ELM STREET, STE C
ORANGE, CA 92867
PH: (714) 744-6020 FX: (714) 744-6030

TITLE:
E3 HURRICANE BIFOLD DOOR
COMPONENTS &
BILL OF MATERIALS

PREPARED BY:
BUILDING DROPS, INC.
398 E. DANIA BEACH BLVD., STE. 338
DANIA BEACH, FL 33004
PH: (954) 399-8478 FX: (954) 744-4738

REVISIONS

NO.	DESCRIPTION	BY	DATE
A	2010 FBC CODE UPDATE	MS	2.21.12
B	5TH EDITION FBC CODE UPDATE	MS	7.11.14
C	MD RER COMMENTS	SM	7.28.15

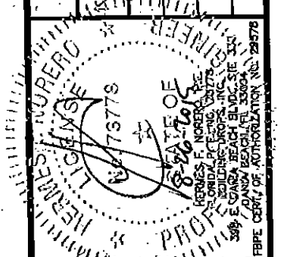

PRODUCT REVISED
as complying with the Florida Building Code
Acceptance No. 14-0910.07
Expiration Date 7/1/16
By: [signature]
Miami-Dade Product Control

DATE: 10.6.10
DWN BY: JLA
CHK BY: KSD
SCALE: NTS

DWG #: CIP001

SHEET: 8 OF 11

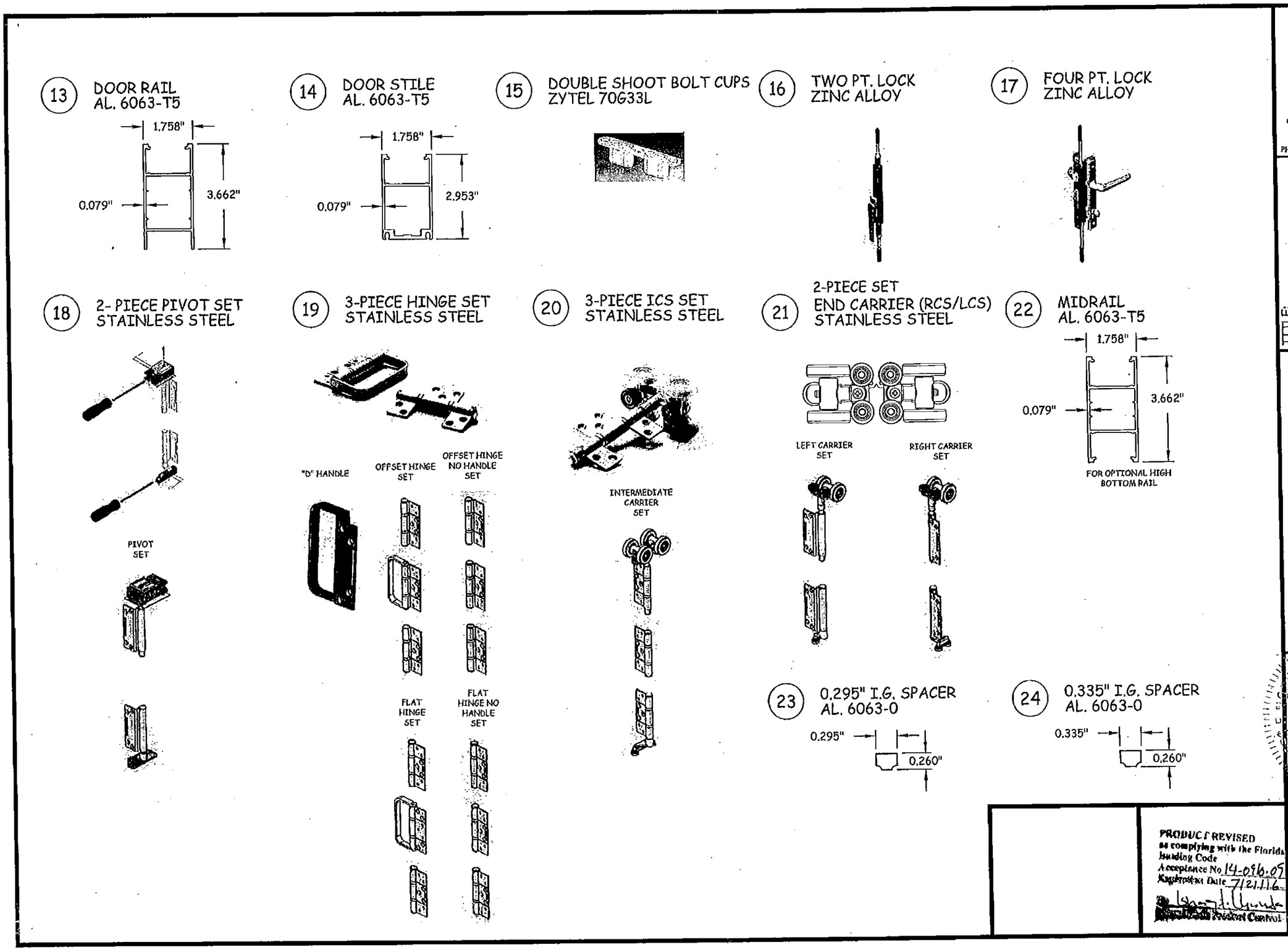

LANAI DOORS

COASTAL INNOVATIVE PRODUCTS
941 NORTH ELM STREET, STE. C
ORANGE, CA 92867
PH: (714) 744-6020 FX: (714) 744-6030

TITLE: E3 HURRICANE BIFOLD DOOR COMPONENTS

PREPARED BY:
BUILDING DROPS, INC.
398 E. DANIA BEACH BLVD., STE. 338
DANIA BEACH, FL 33004
PH: (954) 399-8478 FX: (954) 744-4738

REVISIONS

NO.	DESCRIPTION	BY	DATE
A	2010 FBC CODE UPDATE	MS	2.21.12
B	5TH EDITION FBC CODE UPDATE	MS	7.11.14
C	MD RER COMMENTS	SM	7.28.15

HERMES E. NORERO, P.E.
FLORIDA P.E. NO. 73778
BUILDING DROPS, INC.
398 E. DANIA BEACH BLVD., STE. 338
DANIA BEACH, FL 33004
FBPE CERT. OF AUTHORIZATION NO. 29578

8-26-2015

PRODUCT REVISED
as complying with the Florida Building Code
Acceptance No. 14-0916.05
Expiration Date 7/21/16
Product Control

DATE: 10.6.10
DWN BY: JLA
CHK BY: KSD
SCALE: NTS

DWG #: CIP001

SHEET: 9 OF 11

PANEL CT.	QUALIFIED CONFIGURATIONS								
1	1L	1R	-	-	-	-	-	-	-
2	1L1R	2L	2R	-	-	-	-	-	-
3	1L2R	2L1R	3L	3R	-	-	-	-	-
4	1L3R	3L1R	2L2R	4L	4R	-	-	-	-
5	1L4R	4L1R	2L3R	3L2R	5L	5R	-	-	-
6	1L5R	5R1L	2L4R	4R2L	3L3R	6L	6R	-	-
7	1L6R	6L1R	2L5R	5L2R	3L4R	4R3L	7L	7R	-
8	1L7R	7L1R	2L6R	6L2R	3L5R	5L3R	4L4R	8L	8R
9	1L8R	8L1R	2L7R	7L2R	3L6R	6R3L	4L5R	5L4R	-
10	2L8R	8L2R	3L7R	7L3R	4L6R	6L4R	5L5R	-	-
11	3L8R	8L3R	4L7R	7L4R	5L6R	6L5R	-	-	-
12	4L8R	8L4R	5L7R	7L5R	6L6R	-	-	-	-
13	5L8R	8L5R	6L7R	7L6R	-	-	-	-	-
14	6L8R	8L6R	7L7R	-	-	-	-	-	-
15	7L8R	8L7R	-	-	-	-	-	-	-
16	8L8R	-	-	-	-	-	-	-	-

NOTES:

1. MAXIMUM PANEL SIZE: 36" X 96".

2. END PANEL HARDWARE:
   A. ODD TO ODD PANELS (I.E. 3L3R CONFIG.)- REQUIRE 4-PT LOCK (ITEM 17) OR 2-PT LOCK (ITEM 16) ON ACTION PANEL (#3L OR #3R) AND 2-PT LOCK (ITEM 16) ON THE STRIKE-PLATE PANEL (#3R OR #3L)

   B. ODD TO EVEN PANELS (I.E. 3L2R CONFIG.)- REQUIRE 4-PT LOCK (ITEM 17) OR 2-PT LOCK (ITEM 16) ON ACTION PANEL (#3L) AND ONE END CARRIER (ITEM 21) (#2R)

   C. EVEN TO EVEN PANELS (I.E. 2L4R CONFIG.) - REQUIRE ONE END CARRIER (ITEM 21) ON BOTH PANELS (#2L AND #4R);

   D. ODD PANEL INTO JAMB (I.E. 5L CONFIG.) - REQUIRE EITHER 4-PT LOCK (ITEM 17) OR 2-PT LOCK (ITEM 16) ON ACTION PANEL (#5L)

   E. EVEN PANEL INTO JAMB (I.E. 6L) - REQUIRE ONE END CARRIER (ITEM 21) (#6L)

3. HINGED JOINT PANELS - ALL HINGED PANELS REQUIRE THREE HINGES (ITEM 19) AND TWO 2-PT LOCKS (ITEM 16)

4. CARRIER JOINT PANELS - ALL EVEN NUMBERED PANELS REQUIRE AN ICS (ITEM 20)AT THE TOP OF THE PANEL, A HINGE (ITEM 20) IN THE CENTER AND A CONCEALED INTERMEDIATE GUIDE (ITEM 20) AT THE BOTTOM

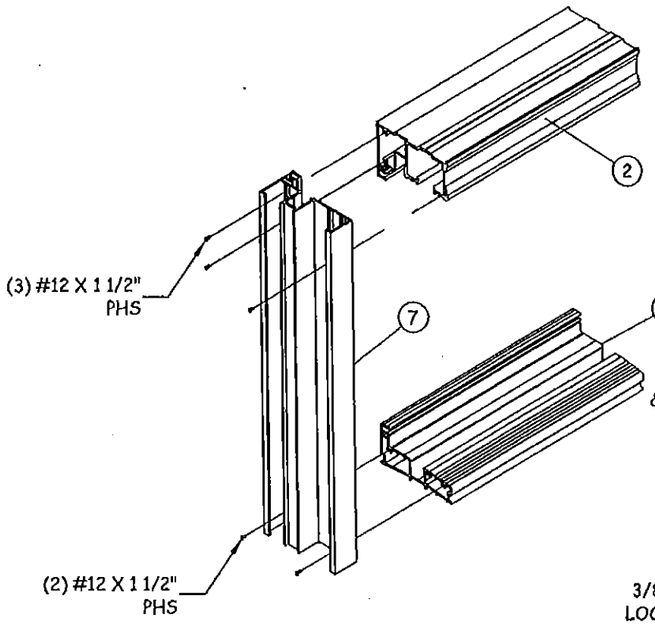

L/10 **FRAME CORNER DETAIL**
DOOR FRAME WITH STANDARD SILL SHOWN

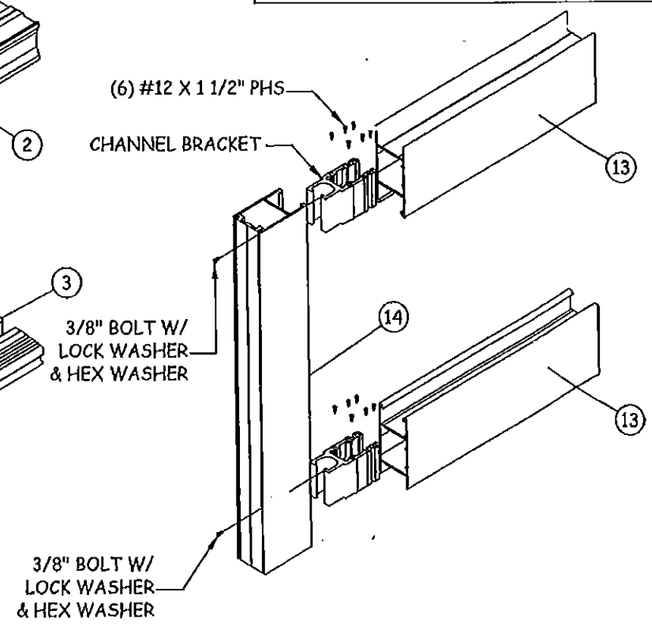

M/10 **PANEL CORNER DETAIL**
DOOR PANEL

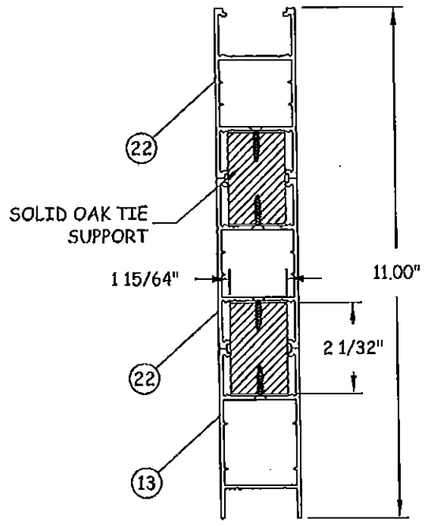

N/10 **VERTICAL SECTION**
OPTIONAL HIGH BOTTOM RAIL (WOOD REINFORCED)

LANAI DOORS
COASTAL INNOVATIVE PRODUCTS
941 NORTH ELM STREET, STE. C
ORANGE, CA 92867
PH: (714) 744-6020 FX: (714) 744-6030

TITLE: E3 HURRICANE BIFOLD DOOR CORNER DETAILS & CONFIGURATIONS

PREPARED BY:
BUILDING DROPS, INC.
398 E. DANIA BEACH BLVD., STE. 338
DANIA BEACH, FL 33004
PH: (954) 399-8478 FX: (954) 744-4738

REVISIONS

NO.	DESCRIPTION	BY	DATE
A	2010 FBC CODE UPDATE	MS	2.21.12
B	5TH EDITION FBC CODE UPDATE	MS	7.11.14
C	MD RER COMMENTS	SM	7.28.15

HERMES F. NORERO, P.E. FLORIDA P.E. NO. 73778 STATE OF FLORIDA

PRODUCT REVISED
as complying with the Florid
Building Code
Acceptance No 14-0910.07
Expiration Date 7/21/16
Approved Quality Product Control

DATE: 10.6.10
DWN. BY: JLA
CHK BY: KSD
SCALE: NTS
DWG #: CIP001
SHEET: 10 OF 11

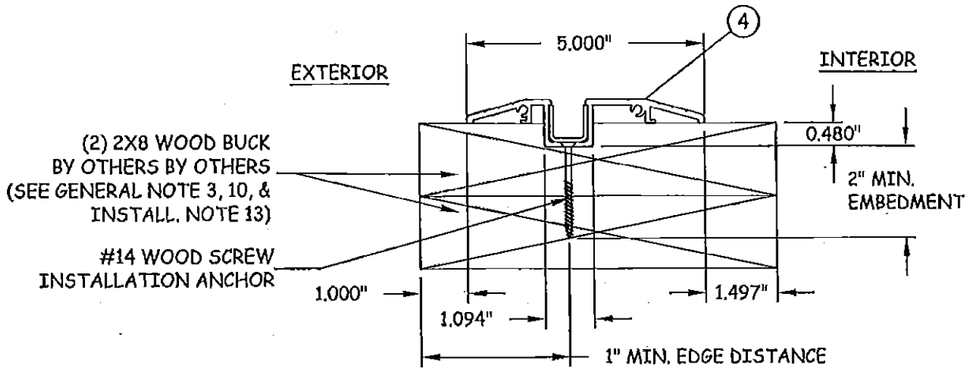

S 11 **LOW-RISE SILL DETAIL**
2X8 WOOD BUCK INSTALLATION PREPARATION

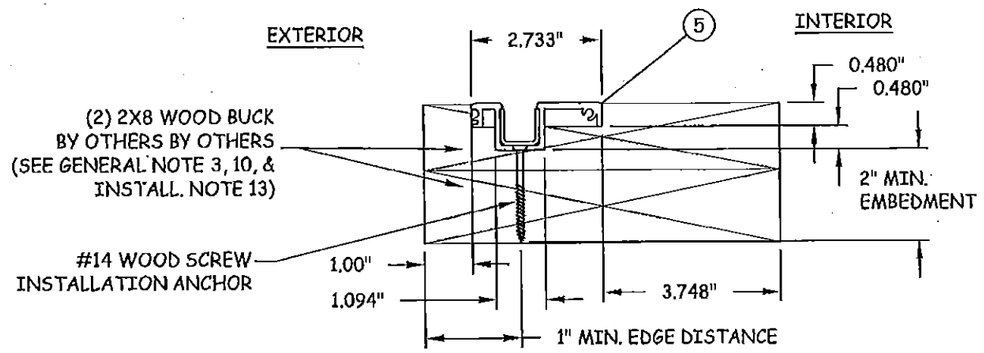

U 11 **FLUSH SILL DETAIL**
2X8 WOOD BUCK INSTALLATION PREPARATION

ALL SUBSTRATES MUST BE RECESSED AND/OR ROUTED TO ACCOMMODATE THESE COMPONENTS PRIOR TO INSTALLATION. ALL EDGE DISTANCES AND EMBEDMENTS FOR ANCHORS MUST BE MAINTAINED AS NOTED IN THIS SHEET.

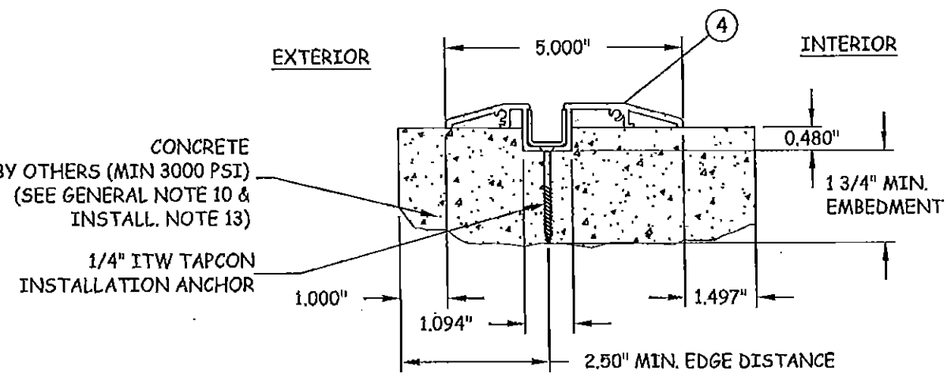

T 11 **LOW-RISE SILL DETAIL**
CONCRETE INSTALLATION PREPARATION

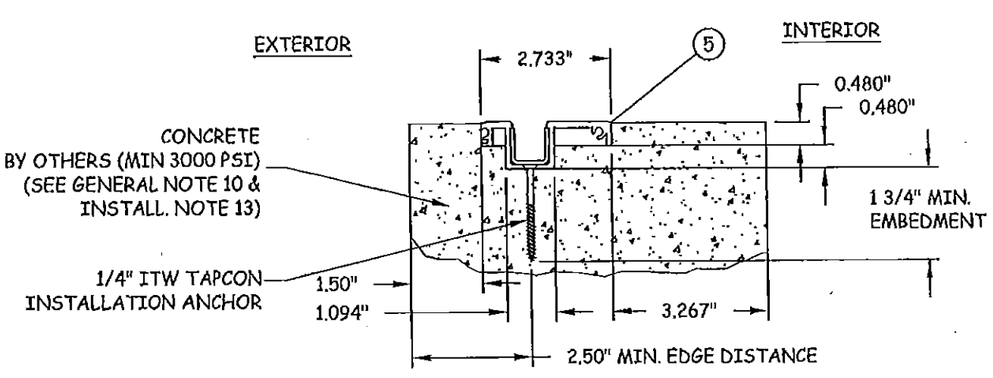

V 11 **FLUSH SILL DETAIL**
CONCRETE INSTALLATION PREPARATION

PRODUCT REVISED
as complying with the Florida Building Code
Acceptance No. 14-0910-09
Expiration Date July 21, 2016
By Ishaq I. Uwande
Miami State Product Control

LANAI DOORS
COASTAL INNOVATIVE PRODUCTS
941 NORTH ELM STREET, STE. C
ORANGE, CA 92867
PH: (714) 744-6020 FX: (714) 744-6030

TITLE:
E3 HURRICANE BIFOLD DOOR INSTALLATION PREPARATION DETAILS

PREPARED BY:
BUILDING DROPS, INC.
398 E. DANIA BEACH BLVD., STE. 338
DANIA BEACH, FL 33004
PH: (954) 399-8478 FX: (954) 744-4738

REVISIONS

NO.	DESCRIPTION	BY	DATE
A	2010 FBC CODE UPDATE	MS	2.21.12
B	5TH EDITION FBC CODE UPDATE	MS	7.11.14
C	MD RER COMMENTS	SM	7.28.15

HERMES F. NORERO, P.E.
FLORIDA P.E. NO. 75775
BUILDING DROPS, INC.
398 E. DANIA BEACH BLVD., STE. 338
DANIA BEACH, FL 33004
PROFESSIONAL ENGINEER

DATE: 10.6.10
DWN BY: JLA
CHK BY: KSD
SCALE: NTS

DWG #: CIP001

SHEET: 11 OF 11