MIAMI-DADE COUNTY
DEPARTMENT OF REGULATORY AND ECONOMIC RESOURCES (RER)
BOARD AND CODE ADMINISTRATION DIVISION

MIAMI-DADE COUNTY
PRODUCT CONTROL SECTION
11805 SW 26 Street, Room 208
T (786) 315-2590 F (786) 315-2599
www.miamidade.gov/economy

NOTICE OF ACCEPTANCE (NOA)

CGI Windows & Doors
10100 NW 25th Street
Miami, FL 33172

SCOPE:

This NOA is being issued under the applicable rules and regulations governing the use of construction materials. The documentation submitted has been reviewed and accepted by Miami-Dade County RER - Product Control Section to be used in Miami Dade County and other areas where allowed by the Authority Having Jurisdiction (AHJ).

This NOA shall not be valid after the expiration date stated below. The Miami-Dade County Product Control Section (In Miami Dade County) and/or the AHJ (in areas other than Miami Dade County) reserve the right to have this product or material tested for quality assurance purposes. If this product or material fails to perform in the accepted manner, the manufacturer will incur the expense of such testing and the AHJ may immediately revoke, modify, or suspend the use of such product or material within their jurisdiction. RER reserves the right to revoke this acceptance, if it is determined by Miami-Dade County Product Control Section that this product or material fails to meet the requirements of the applicable building code.

This product is approved as described herein, and has been designed to comply with the Florida Building Code, including the High Velocity Hurricane Zone.

DESCRIPTION: Series "Sentinel 110" Aluminum Single Hung Window – L.M.I.

APPROVAL DOCUMENT: Drawing No. **W10-03**, titled Series Sentinel 110 Alum. S.H. Wdw. (L.M.I./S.M.I.)", sheets 1 through 9 of 9, dated 02/02/10, with the revision B dated 09/09/14, prepared by Al-Farooq Corporation, signed and sealed by Javad Ahmad, P.E., bearing the Miami–Dade County Product Control Revision stamp with the Notice of Acceptance number and expiration date by the Miami-Dade County Product Control Section.

MISSILE IMPACT RATING: Large and Small Missile Impact Resistant.

LABELING: Each unit shall bear a permanent label with the manufacturer's name or logo, city, state, model/series, and following statement: "Miami-Dade County Product Control Approved", unless otherwise noted herein.

RENEWAL of this NOA shall be considered after a renewal application has been filed and there has been no change in the applicable building code negatively affecting the performance of this product.

TERMINATION of this NOA will occur after the expiration date or if there has been a revision or change in the materials, use, and/or manufacture of the product or process. Misuse of this NOA as an endorsement of any product, for sales, advertising or any other purposes shall automatically terminate this NOA. Failure to comply with any section of this NOA shall be cause for termination and removal of NOA.

ADVERTISEMENT: The NOA number preceded by the words Miami-Dade County, Florida, and followed by the expiration date may be displayed in advertising literature. If any portion of the NOA is displayed, then it shall be done in its entirety.

INSPECTION: A copy of this entire NOA shall be provided to the user by the manufacturer or its distributors and shall be available for inspection at the job site at the request of the Building Official.

This NOA **revises and renews NOA# 11-1115.08** and consists of this page 1 and evidence pages E-1 and E-2, as well as approval document mentioned above.

The submitted documentation was reviewed by **Manuel Perez, P.E.**

MIAMI-DADE COUNTY APPROVED

1/28/15

NOTICE OF ACCEPTANCE: EVIDENCE SUBMITTED

A. DRAWINGS

1. Manufacturer's die drawings and sections.
2. Drawing No **W10-03**, titled "Series Sentinel 110 Alum S.H. Wdw. (L.M.I./S.M.I.)", sheets 1 through 9 of 9, dated 02/02/10, with revision B dated 09/09/14, prepared by Al-Farooq Corporation, signed and sealed by Javad Ahmad, P.E.

B. TESTS

1. Test reports on: 1) Air Infiltration Test, per FBC, TAS 202-94
   2) Uniform Static Air Pressure Test, Loading per FBC TAS 202-94
   3) Water Resistance Test, per FBC, TAS 202-94
   4) Large Missile Impact Test per FBC, TAS 201-94
   5) Cyclic Wind Pressure Loading per FBC, TAS 203-94
   6) Forced Entry Test, per FBC 2411.3.2.1, TAS 202-94

   along with marked-up drawings and installation diagram of a series "Sentinel" aluminum single hung window, prepared by Hurricane Test Laboratory, LLC, Test Report No. **HTL-0080-0101-10**, dated 02/03/10, signed and sealed by Vinu J. Abraham, P.E.
   (Submitted under NOA No.10-0510.11)

C. CALCULATIONS

1. Anchor verification calculations and structural analysis, complying with **FBC-5th Edition (2014)**, dated 09/08/14, prepared by Al-Farooq Corporation, signed and sealed by Javad Ahmad, P.E.
2. Glazing complies with **ASTM E1300-09**

D. QUALITY ASSURANCE

1. Miami–Dade Department of Regulatory and Economic Resources (RER).

E. MATERIAL CERTIFICATIONS

1. Notice of Acceptance No. **11-0624.02** issued to **E.I. DuPont DeNemours & Co.**, Inc. for their "**DuPont SentryGlas® Interlayer**" dated 08/25/11, expiring on 01/14/17.
2. Notice of Acceptance No. **14-0423.15** issued to **Eastman Chemical Company (MA)** for their "**Saflex CP - Saflex and Saflex HP Composite Glass Interlayers with PET Core**" dated 06/19/14, expiring on 12/11/18.
3. Notice of Acceptance No. **14-0423.17** issued to **Eastman Chemical Company (MA)** for their "**Saflex Clear and Color Glass Interlayers**" dated 0619/14, expiring on 05/21/16.

Manuel Perez

Manuel Perez, P.E.
Product Control Examiner
NOA No. 14-0915.06
Expiration Date: September 22, 2020
Approval Date: February 05, 2015

NOTICE OF ACCEPTANCE: EVIDENCE SUBMITTED

F. STATEMENTS

1. Statement letter of conformance, complying with **FBC-5th Edition (2014)**, and of no financial interest, dated 08/26/14, issued by Al-Farooq Corporation, signed and sealed by Javad Ahmad, P.E.
2. Laboratory compliance letter for Test Report No. **HTL-0080-0101-10**, issued by Hurricane Test Laboratory, LLC, dated February 03, 2010, signed and sealed by Vinu J. Abraham, P.E.
   (Submitted under NOA No.10-0510.11)
3. Proposal No. **09-0032** issued by BCCO, dated October 22, 2009, signed by Renzo Narciso.
   (Submitted under NOA No.10-0510.11)

G. OTHERS

1. Notice of Acceptance No. **11-1115.08**, issued to CGI Windows and Doors for their Series "110 Sentinel" Aluminum Single Hung Window - L.M.I. approved on 01/12/12 and expiring on 09/22/15.

Manuel Perez, P.E.
Product Control Examiner
NOA No. 14-0915.06
Expiration Date: September 22, 2020
Approval Date: February 05, 2015

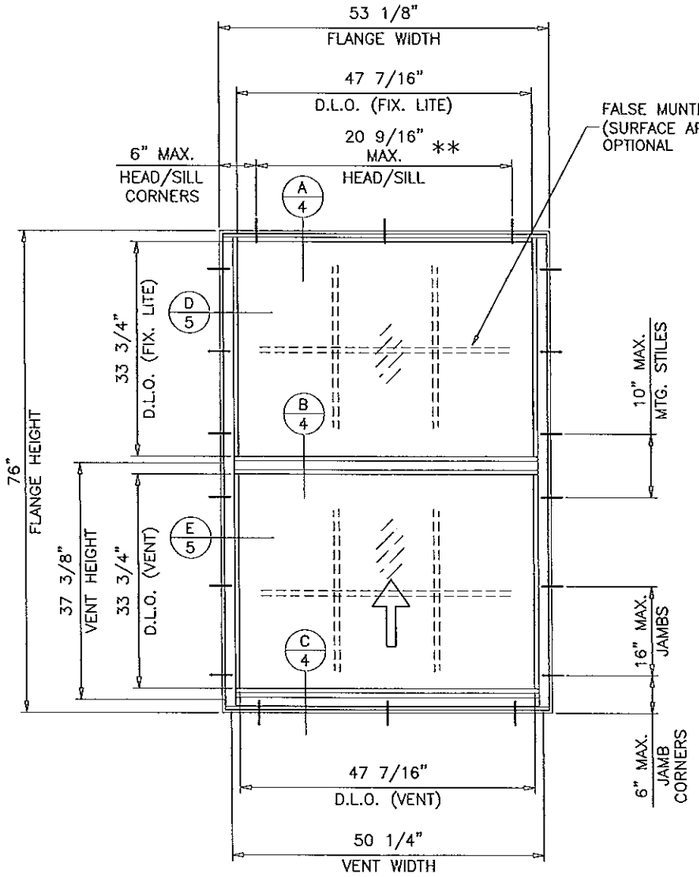

FLANGE & FLANGE ADAPTOR FRAME

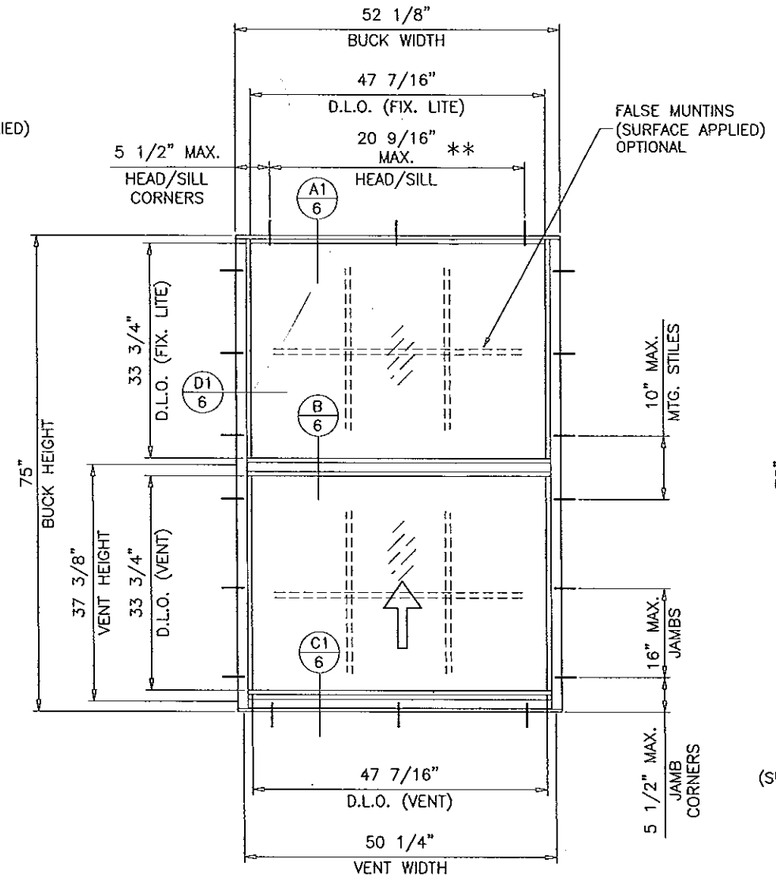

EQUAL LEG FRAME

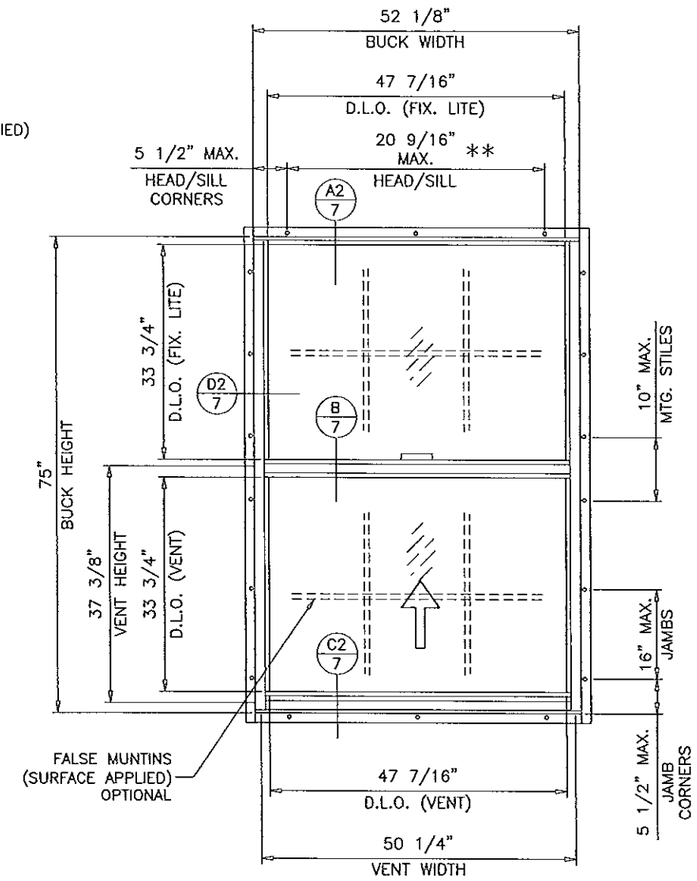

FIN FRAME

TYPICAL ELEVATION

SERIES SENTINEL 110 ALUMINUM SINGLE HUNG WINDOW

DESIGN LOAD RATINGS FOR THESE WINDOWS TO BE AS PER CHARTS SHOWN ON SHEET 2.

APPROVAL APPLIES TO SINGLE UNITS OR SIDE BY SIDE COMBINATIONS OF S.H./S.H. OR SINGLE HUNG WDW. WITH OTHER MIAMI-DADE COUNTY APPROVED WINDOWS USING MIAMI-DADE COUNTY APPROVED MULLIONS IN BETWEEN.
LOWER DESIGN PRESSURE FROM WINDOWS OR MULLION APPROVAL WILL APPLY TO ENTIRE SYSTEM.

THIS PRODUCT HAS BEEN DESIGNED AND TESTED TO COMPLY WITH THE REQUIREMENTS OF THE FLORIDA BUILDING CODE INCLUDING HIGH VELOCITY HURRICANE ZONE (HVHZ).

WOOD BUCKS BY OTHERS, MUST BE ANCHORED PROPERLY TO TRANSFER LOADS TO THE STRUCTURE.

ANCHORS SHALL BE AS LISTED, SPACED AS SHOWN ON DETAILS, ANCHORS EMBEDMENT TO BASE MATERIAL SHALL BE BEYOND WALL DRESSING OR STUCCO.

ANCHORING OR LOADING CONDITIONS NOT SHOWN IN THESE DETAILS ARE NOT PART OF THIS APPROVAL.

A LOAD DURATION INCREASE IS USED IN DESIGN OF ANCHORS INTO WOOD ONLY.

MATERIALS INCLUDING BUT NOT LIMITED TO STEEL/METAL SCREWS, THAT COME INTO CONTACT WITH OTHER DISSIMILAR MATERIALS SHALL MEET THE REQUIREMENTS OF THE FLORIDA BUILDING CODE.

**
CENTER ANCHOR REQUIRED WHEN SPACING EXCEEDS 20 9/16"

LAMINATED GLASS
INSULATING LAM. GLASS
LARGE MISSILE IMPACT
SMALL MISSILE IMPACT

Engr: JAVAD AHMAD
CIVIL
FLA. PE # 70592
C.A.N. 3538

JAN 20 2015

PRODUCT REVISED
as complying with the Florida Building Code
Acceptance No 14-0915.06
Expiration Date Sept. 22, 2020
By Manuel Perez
Miami Dade Product Control

AL-FAROOQ CORPORATION
ENGINEERS & PRODUCT DEVELOPMENT
1235 S.W. 87 AVE
MIAMI, FLORIDA 33174
TEL. (305) 264-8100 FAX. (305) 262-6978
COMP-ANL\W10-03CGI

SERIES SENTINEL 110 ALUM S.H. WDW. (L.M.I./S.M.I.)

CGI WINDOWS & DOORS
10100 N.W. 25TH STREET
MIAMI, FL. 33172
TEL. (305) 593-6590 FAX. (305) 593-6592

revisions:

no	date	by	description
A	08.13.10		REV. PER BCCO COMMENTS
B	09.09.14		UPDATED TO 2014 FBC

date: 02-02-10
scale: 1/2" = 1"
dr. by:
chk. by:

drawing no.
W10-03

EQUAL LITES WINDOWS							
DESIGN LOAD CAPACITY - PSF							
FLANGE DIMS.		BUCK DIMS.		GLASS TYPES 'A'&'A1'		GLASS TYPES 'B'&'B1'	
WIDTH	HEIGHT	WIDTH	HEIGHT	EXT.(+)	INT.(-)	EXT.(+)	INT.(-)
19-1/8"	26"	18-1/8"	25"	75.0	75.0	80.0	85.0
26-1/2"		25-1/2"		75.0	75.0	80.0	85.0
37"		36"		75.0	75.0	80.0	85.0
49"		48"		75.0	75.0	80.0	85.0
53-1/8"		52-1/8"		75.0	75.0	80.0	85.0
19-1/8"	38-3/8"	18-1/8"	37-3/8"	75.0	75.0	80.0	85.0
26-1/2"		25-1/2"		75.0	75.0	80.0	85.0
37"		36"		75.0	75.0	80.0	85.0
49"		48"		75.0	75.0	80.0	85.0
53-1/8"		52-1/8"		75.0	75.0	80.0	85.0
19-1/8"	50-5/8"	18-1/8"	49-5/8"	75.0	75.0	80.0	85.0
26-1/2"		25-1/2"		75.0	75.0	80.0	85.0
37"		36"		75.0	75.0	80.0	85.0
49"		48"		75.0	75.0	80.0	85.0
53-1/8"		52-1/8"		75.0	75.0	80.0	85.0
19-1/8"	63"	18-1/8"	62"	75.0	75.0	80.0	85.0
26-1/2"		25-1/2"		75.0	75.0	80.0	85.0
37"		36"		75.0	75.0	80.0	85.0
49"		48"		75.0	75.0	80.0	85.0
53-1/8"		52-1/8"		75.0	75.0	80.0	85.0
19-1/8"	76"	18-1/8"	75"	75.0	75.0	80.0	85.0
26-1/2"		25-1/2"		75.0	75.0	80.0	85.0
37"		36"		75.0	75.0	80.0	85.0
49"		48"		75.0	75.0	80.0	85.0
53-1/8"		52-1/8"		75.0	75.0	80.0	85.0
19-1/8"	85"	18-1/8"	84"	75.0	75.0	80.0	85.0
26-1/2"		25-1/2"		75.0	75.0	80.0	85.0
37"		36"		75.0	75.0	80.0	85.0
46-1/2"		45-1/2"		75.0	75.0	80.0	85.0

UNEQUAL LITES WINDOWS								
DESIGN LOAD CAPACITY - PSF								
FLANGE DIMS.		BUCK DIMS.		MAX.TOP LITE	GLASS TYPES 'A'&'A1'		GLASS TYPES 'B'&'B1'	
WIDTH	HEIGHT	WIDTH	HEIGHT	'A' DIM.	EXT.(+)	INT.(-)	EXT.(+)	INT.(-)
53-1/8"	76"	52-1/8"	75"	36-1/4"	75.0	75.0	80.0	85.0
49"	79"	48"	78"	39-1/4"	75.0	75.0	80.0	85.0
26-1/2"	85"	25-1/2"	84"	70-5/8"	75.0	75.0	80.0	85.0
31"		30"		63-5/8"	75.0	75.0	80.0	85.0
33"		32"		60"	75.0	75.0	80.0	85.0
37"		36"		53-1/2"	75.0	75.0	80.0	85.0
43"		42"		45-1/4"	75.0	75.0	80.0	85.0

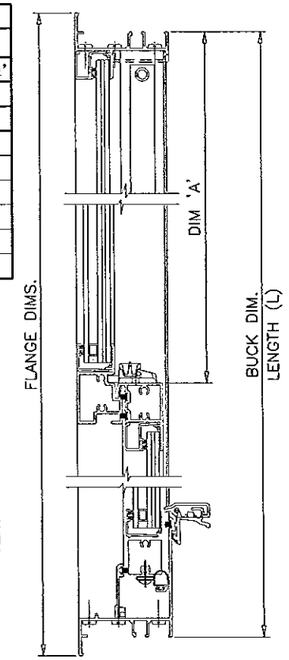

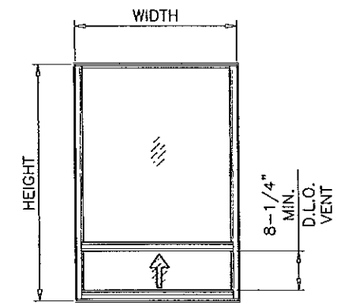

UNEQUAL LITES (ORIEL TYPE)

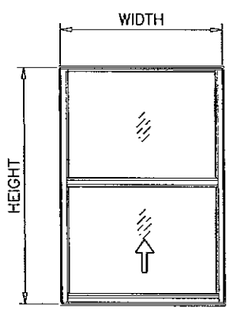

EQUAL LITES

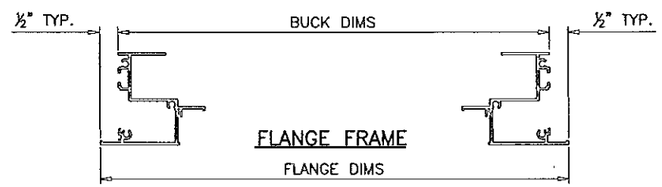

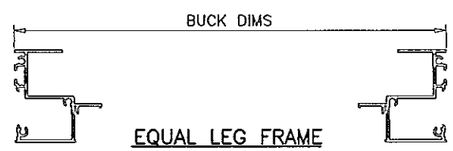

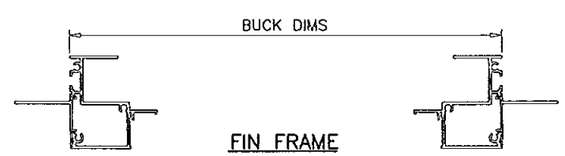

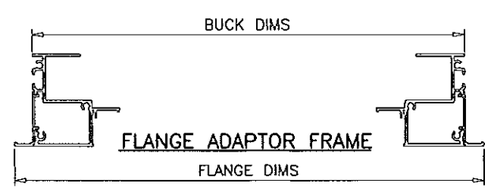

NOTE:
GLASS CAPACITIES ON THIS SHEET ARE BASED ON ASTM E1300-09 (3 SEC. GUSTS) AND FLORIDA BUILDING COMMISSION DECLARATORY STATEMENT DCA05-DEC-219

Engr: JAVAD AHMAD
CIVIL
FLA. PE # 70592
C.A.N. 3538

JAN 27 2015

PRODUCT REVISED
as complying with the Florida Building Code
Acceptance No 14-0915.06
Expiration Date Sept. 22, 2020
By Manuel Zorzo
Miami-Dade Product Control

AL-FAROOQ CORPORATION
ENGINEERS & PRODUCT DEVELOPMENT
1235 S.W. 87 AVE
MIAMI, FLORIDA 33174
TEL. (305) 264-8100 FAX. (305) 262-6978
COMP-ANL\W10-03CGI

SERIES SENTINEL 110 ALUM S.H. WDW. (L.M.I./S.M.I.)

CGI WINDOWS & DOORS
10100 N.W. 25TH STREET
MIAMI, FL. 33172
TEL. (305) 593-6590 FAX. (305) 593-6592

revisions:

no	date	by	description
A	08.13.10		NO CHANGE THIS SHEET
B	09.09.14		UPDATED TO 2014 FBC

date: 02-02-10
scale: 1/2" = 1"
dr. by:
chk. by:

drawing no. W10-03

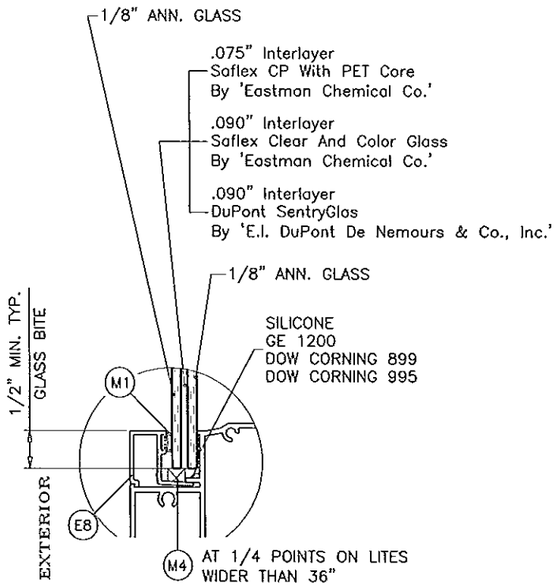

GLASS TYPE 'A'

5/16" OVERALL LAM. GLASS

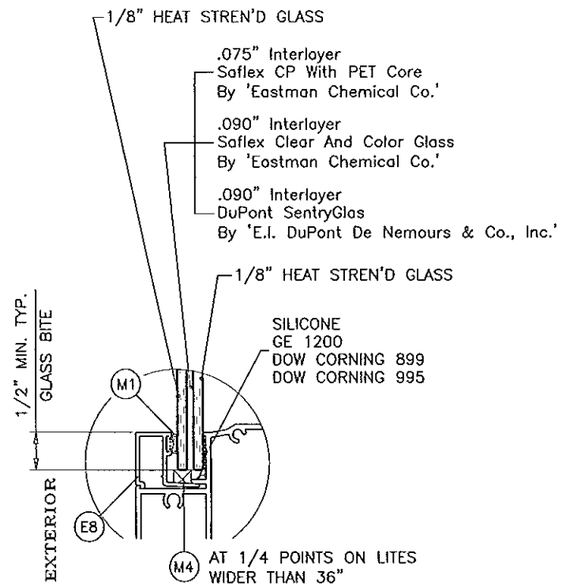

GLASS TYPE 'B'

5/16" OVERALL LAM. GLASS

(L.M.I & S.M.I.)

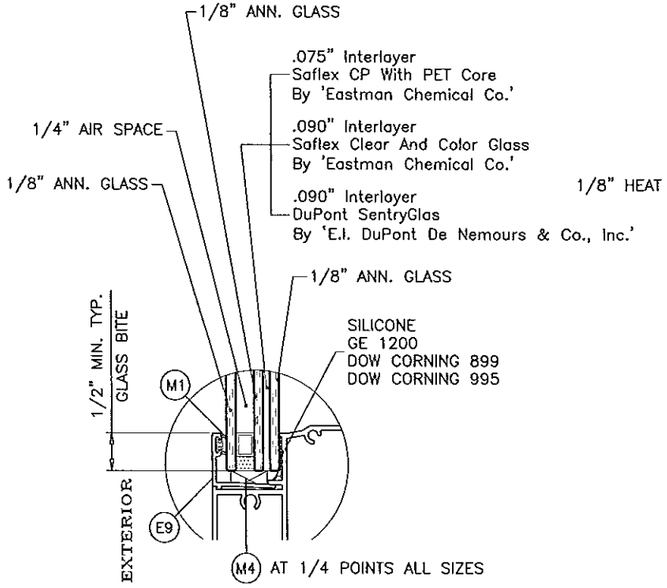

GLASS TYPE 'A1'

0.70" OVERALL INSUL. LAM. GLASS

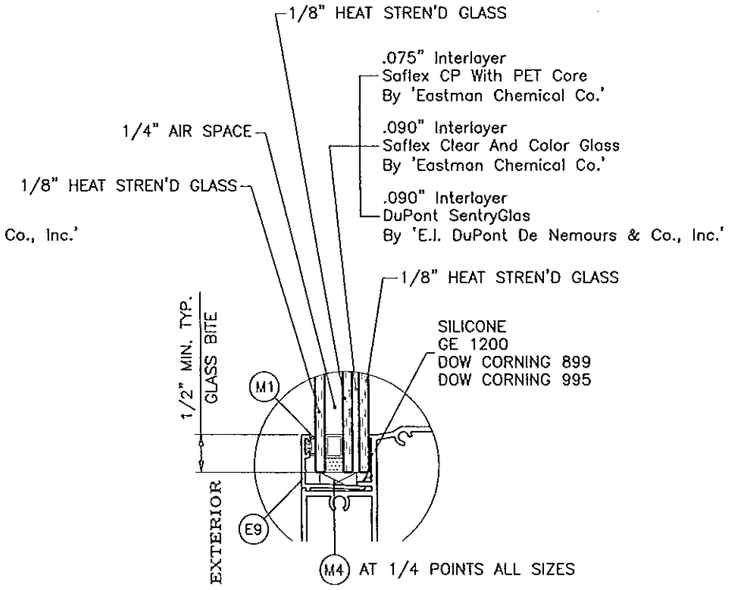

GLASS TYPE 'B1'

0.70" OVERALL INSUL. LAM. GLASS

(L.M.I ONLY)

(S.M.I.)

IN ORDER TO QUALIFY FOR SMALL MISSILE IMPACT RATING
EXTERIOR PLY OF GLASS TYPES 'A1' & 'B1' MUST BE TEMPERED.

AIR SPACE CONSISTING OF:
SPACER:
METAL SPACER AROUND
THE PERIMETER OF THE GLASS.

Engr: JAVAD AHMAD
CIVIL
FLA. PE # 70592
C.A.N. 3538

JAN 27 2015

PRODUCT REVISED
as complying with the Florida
Building Code
Acceptance No 14-0915.06
Expiration Date Sept. 22, 2020
By Manuel Perez
Miami-Dade Product Control

AL-FAROOQ CORPORATION
ENGINEERS & PRODUCT DEVELOPMENT
1235 S.W. 87 AVE
MIAMI, FLORIDA 33174
TEL. (305) 264-8100 FAX. (305) 262-6978
COMP-ANL\W10-03CGI

SERIES SENTINEL 110 ALUM S.H. WDW. (L.M.I./S.M.I.)

CGI WINDOWS & DOORS
10100 N.W. 25TH STREET
MIAMI, FL. 33172
TEL. (305) 593-6590 FAX. (305) 593-6592

revisions:

no	date	by	description
A	08.13.10		REV. PER BCCO COMMENTS
B	09.09.14		UPDATED TO 2014 FBC

date: 02-02-10
scale: 1/2" = 1"
dr. by:
chk. by:

drawing no.
W10-03

FLANGE & FLANGE ADAPTOR FRAME

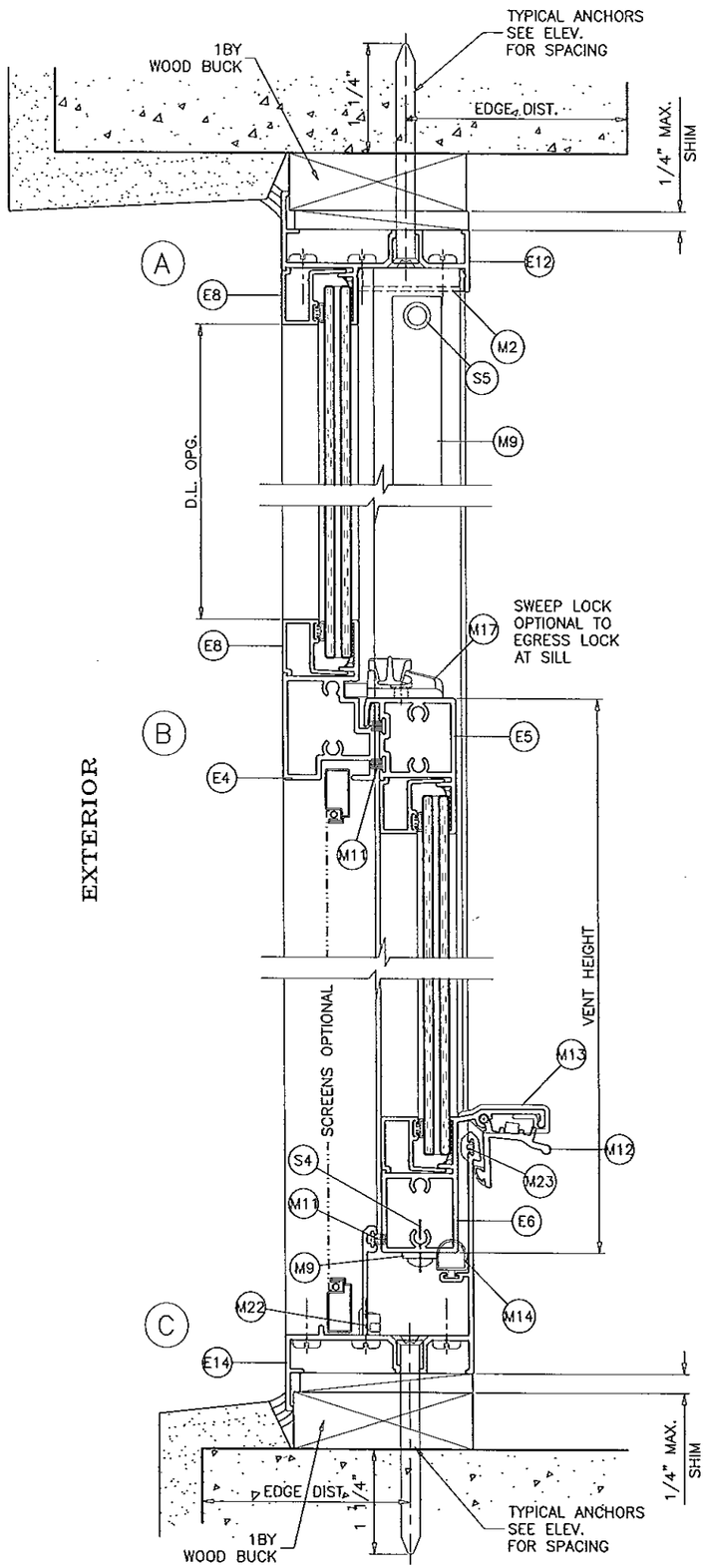

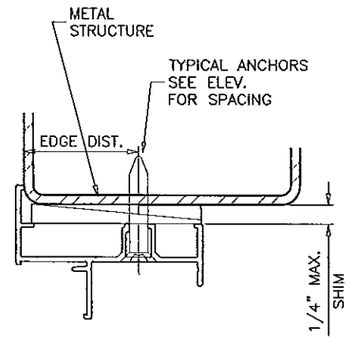

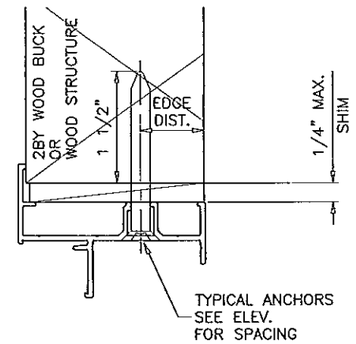

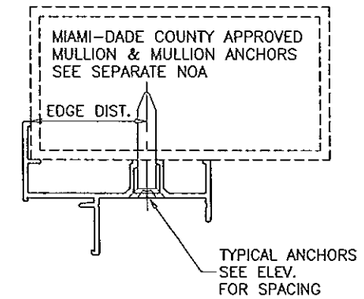

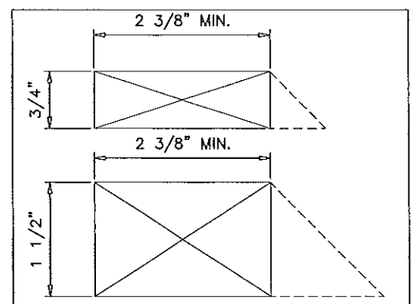

WHEN USED THE MIN. WOOD BUCK DEPTH SHALL BE 2⅜". THE USE OF DEEPER OR BEVELED WOODBUCKS IS PERMITTED.

WOOD BUCKS AND METAL STRUCTURE NOT BY CGI WDW. MUST SUSTAIN LOADS IMPOSED BY GLAZING SYSTEM AND TRANSFER THEM TO THE BUILDING STRUCTURE.

TYPICAL ANCHORS: SEE ELEV. FOR SPACING

1/4" DIA. TAPCON BY 'ITW' (Fu=120 KSI, Fy=92 KSI)
1/4" DIA. ULTRACON BY 'ELCO' (Fu=177 KSI, Fy=155 KSI)

INTO 2BY WOOD BUCKS OR WOOD STRUCTURES
1-1/2" MIN. PENETRATION INTO WOOD

THRU 1BY BUCKS INTO CONC. OR MASONRY
1-1/4" MIN. EMBED INTO CONC. OR MASONRY

DIRECTLY INTO CONC. OR MASONRY
1-1/4" MIN. EMBED INTO CONC. OR MASONRY

#14 SMS OR SELF DRILLING SCREWS (GRADE 2 CRS)
INTO METAL STRUCTURES

STEEL : 12 GA. MIN. (Fy = 36 KSI MIN.)
ALUMINUM : 1/8" THK. MIN. (6063-T5 MIN.)
(STEEL IN CONTACT WITH ALUMINUM TO BE PLATED OR PAINTED)

#14 SMS OR SELF DRILLING SCREWS (GRADE 2 CRS)

INTO MIAMI-DADE COUNTY APPROVED MULLIONS (MIN. THK. = .090")
(NO SHIM SPACE)

TYPICAL EDGE DISTANCE

INTO CONCRETE AND MASONRY = 2" MIN.
INTO WOOD STRUCTURE = 1" MIN.
INTO METAL STRUCTURE = 3/4" MIN.

WOOD AT HEAD, SILL OR JAMBS SG = 0.55 MIN.
CONCRETE AT HEAD, SILL OR JAMBS f'c = 3000 PSI MIN.
C-90 HOLLOW/FILLED BLOCK AT JAMBS f'm = 2000 PSI MIN.

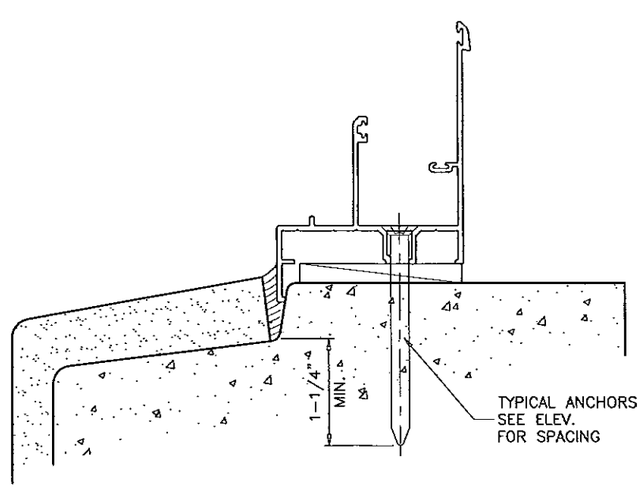

Engr: JAVAD AHMAD
CIVIL
FLA. PE # 70592
C.A.N. 3538

JAN 27 2015

PRODUCT REVISED
as complying with the Florida Building Code
Acceptance No 14-0915.06
Expiration Date Sept. 22, 2020
By Manuel Sera
Miami/Dade Product Control

AL-FAROOQ CORPORATION
ENGINEERS & PRODUCT DEVELOPMENT
1235 S.W. 87 AVE
MIAMI, FLORIDA 33174
TEL. (305) 264-8100 FAX. (305) 262-6978
COMP-ANL\W10-03CGI

SERIES SENTINEL 110 ALUM S.H. WDW. (L.M.I./S.M.I.)

CGI WINDOWS & DOORS
10100 N.W. 25TH STREET
MIAMI, FL. 33172
TEL. (305) 593-6590 FAX. (305) 593-6592

revisions:

no	date	by	description
A	08.13.10		REV. PER BCCO COMMENTS
B	09.09.14		UPDATED TO 2014 FBC

date: 02-02-10
scale: 1/2" = 1"
dr. by:
chk. by:

drawing no.
W10-03

FLANGE & FLANGE ADAPTOR FRAME

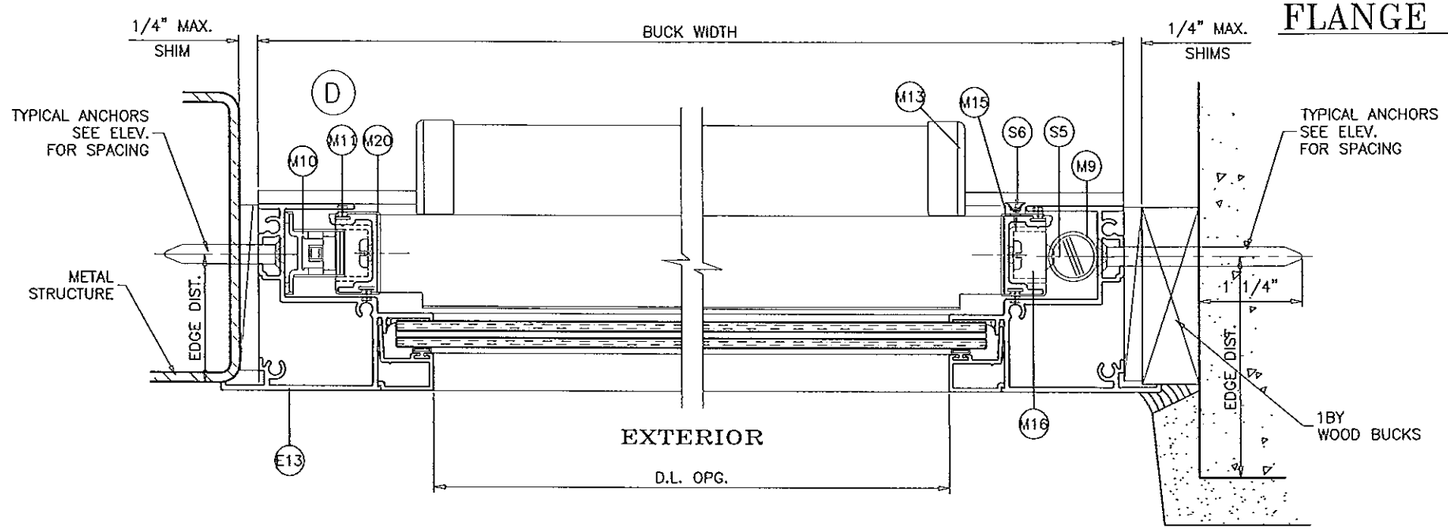

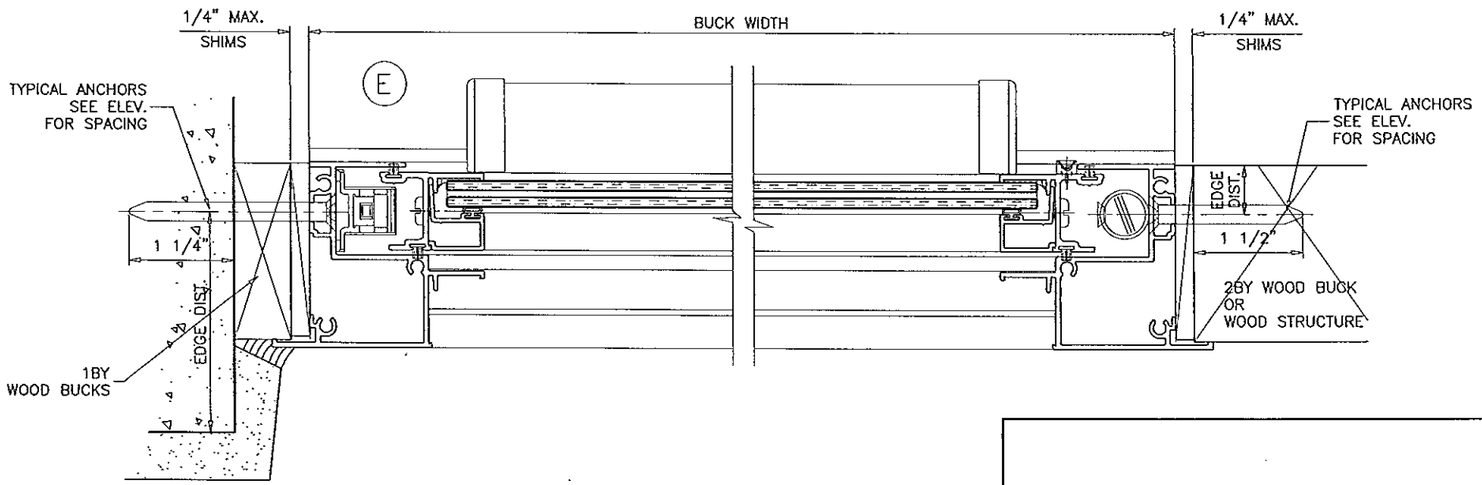

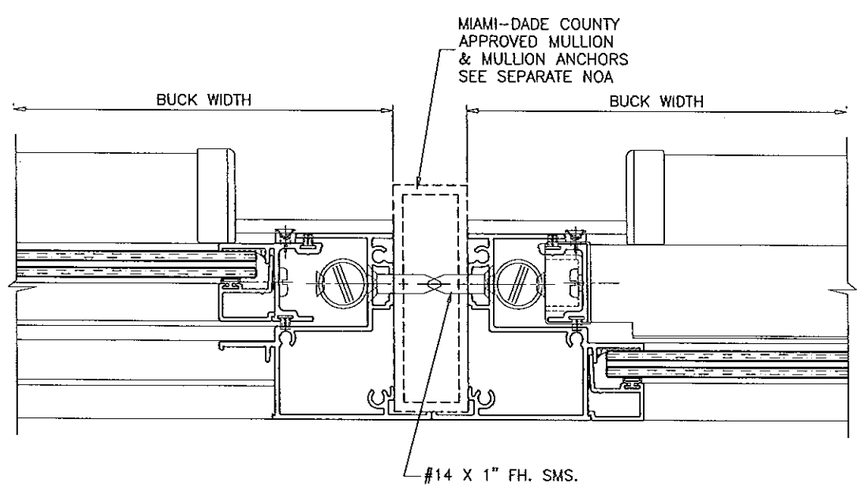

FLANGE ADAPTOR FRAME

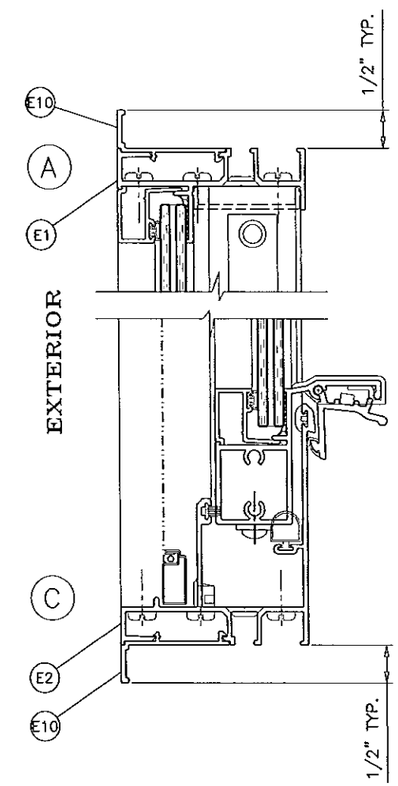

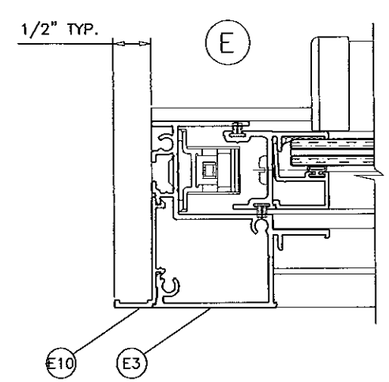

INTALLATION DETAILS SHOWN ON PAGES 4 AND 5 APPLY TO BOTH FLANGE FRAME AND FLANGE ADAPTOR FRAMES.

Engr: JAVAD AHMAD
CIVIL
FLA. PE # 70592
C.A.N. 3538

JAN 27 2015

PRODUCT REVISED
as complying with the Florida
Building Code
Acceptance No 14-0915.06
Expiration Date Sept. 22, 2020
By Manuel Perez
Miami-Dade Product Control

AL-FAROOQ CORPORATION
ENGINEERS & PRODUCT DEVELOPMENT
1235 S.W. 87 AVE
MIAMI, FLORIDA 33174
TEL. (305) 264-8100 FAX. (305) 262-6978
COMP-ANL\W10-03CGI

SERIES SENTINEL 110 ALUM S.H. WDW. (L.M.I./S.M.I.)

CGI WINDOWS & DOORS
10100 N.W. 25TH STREET
MIAMI, FL. 33172
TEL. (305) 593-6590 FAX. (305) 593-6592

revisions:

no	date	by	description
A	08.13.10		REV. PER BCCO COMMENTS
B	09.09.14		UPDATED TO 2014 FBC

date: 02-02-10
scale: 1/2" = 1"
dr. by:
chk. by:

drawing no.
W10-03

EQUAL LEG FRAME

EXTERIOR

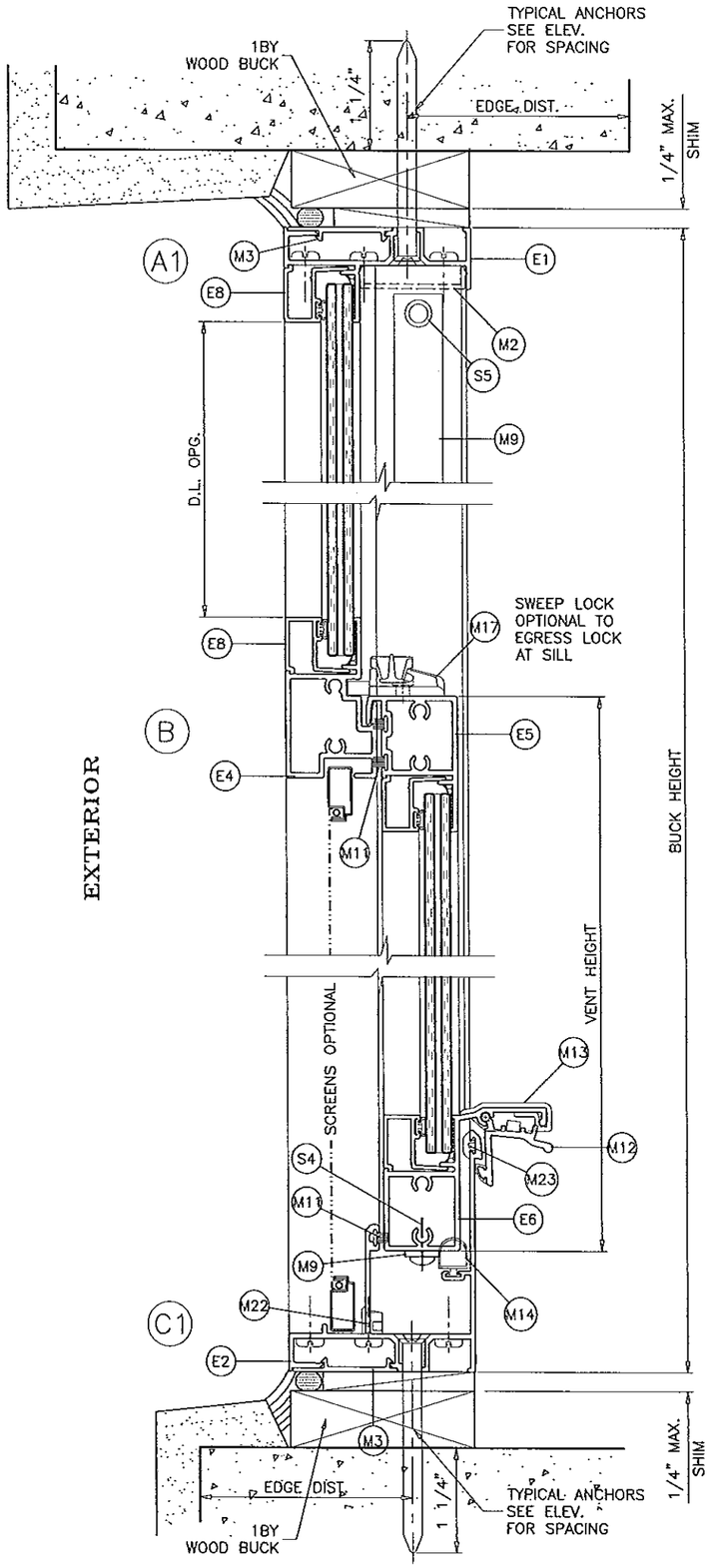

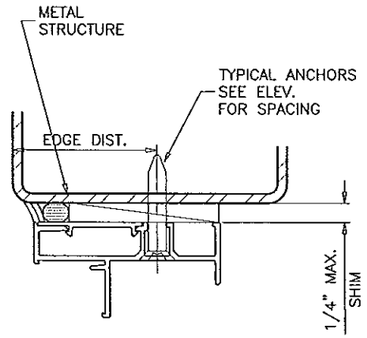

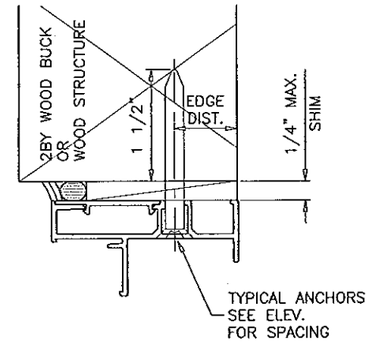

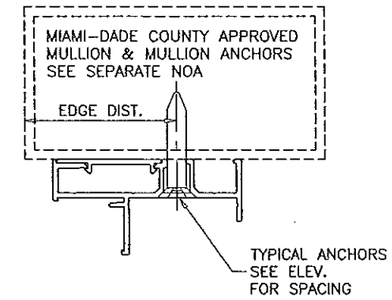

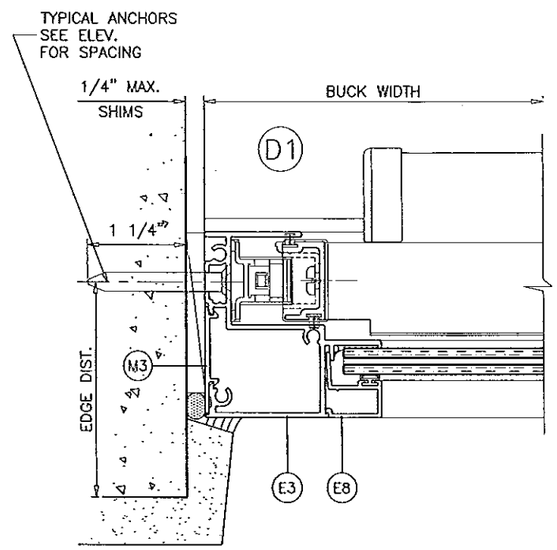

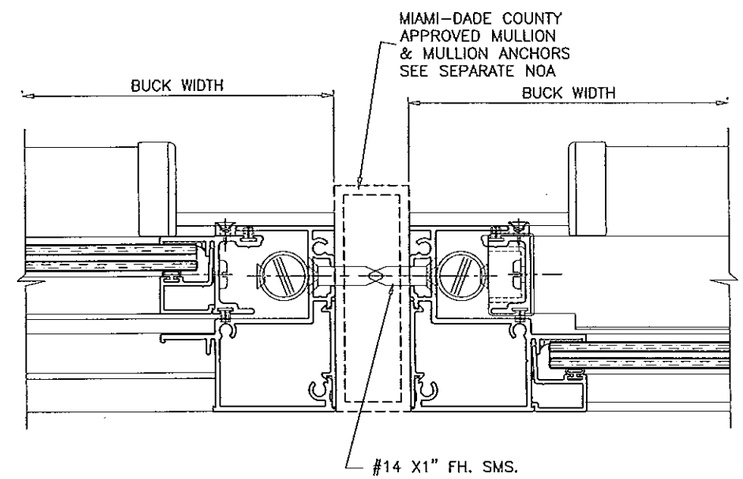

EQUAL LEG FRAME CAN BE INSTALLED DIRECTLY INTO WOOD, CONCRETE OR METAL STRUCTURES WITHOUT THE NEED OF A WOOD BUCK.

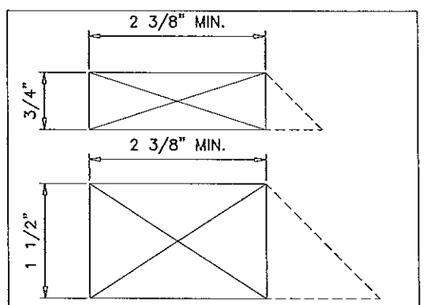

WHEN USED THE MIN. WOOD BUCK DEPTH SHALL BE 2⅜". THE USE OF DEEPER OR BEVELED WOODBUCKS IS PERMITTED.

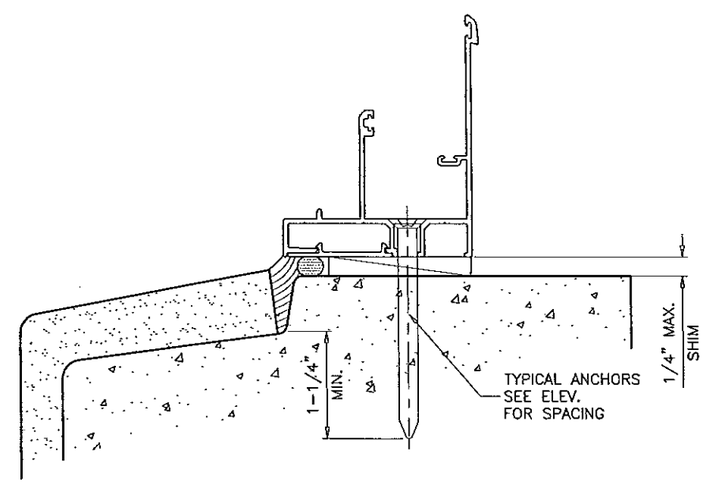

Engr: JAVAD AHMAD
CIVIL
FLA. PE # 70592
C.A.N. 3538

JAN 27 2015

PRODUCT REVISED
as complying with the Florida Building Code
Acceptance No 14-0915.06
Expiration Date Sept. 22, 2020
By Manuel Perez
Miami Dade Product Control

AL-FAROOQ CORPORATION
ENGINEERS & PRODUCT DEVELOPMENT
1235 S.W. 87 AVE
MIAMI, FLORIDA 33174
TEL. (305) 264-8100 FAX. (305) 262-6978
COMP-ANL\W10-03CGI

SERIES SENTINEL 110 ALUM S.H. WDW. (L.M.I./S.M.I.)

CGI WINDOWS & DOORS
10100 N.W. 25TH STREET
MIAMI, FL. 33172
TEL. (305) 593-6590 FAX. (305) 593-6592

revisions:

no	date	by	description
A	08.13.10		REV. PER BCCO COMMENTS
B	09.09.14		UPDATED TO 2014 FBC

date: 02-02-10
scale: 1/2" = 1"
dr. by:
chk. by:

drowing no. W10-03

FIN FRAME

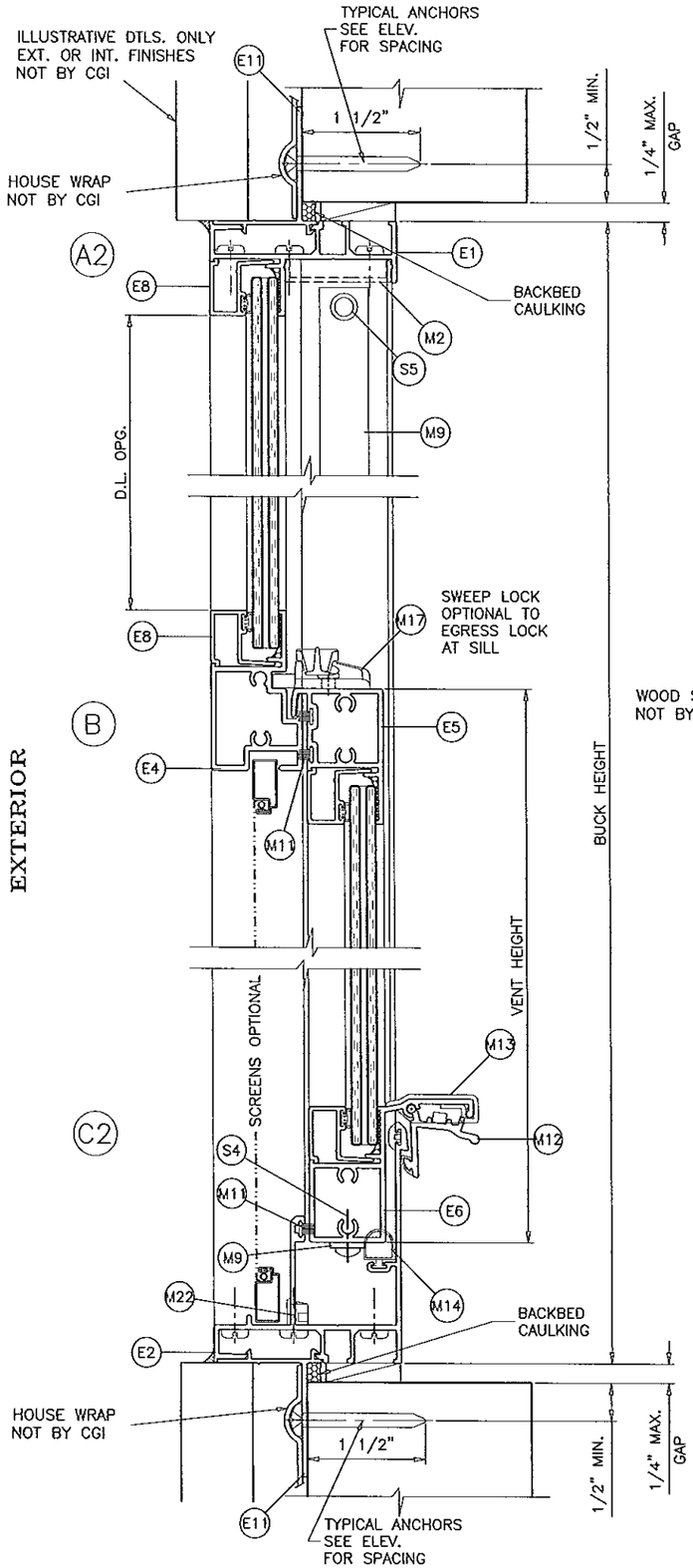

TYPICAL ANCHORS: SEE ELEV. FOR SPACING

#8 SMS (GRADE 2 CRS)

INTO 2BY WOOD BUCKS OR WOOD STRUCTURES
1-1/2" MIN. PENETRATION INTO WOOD

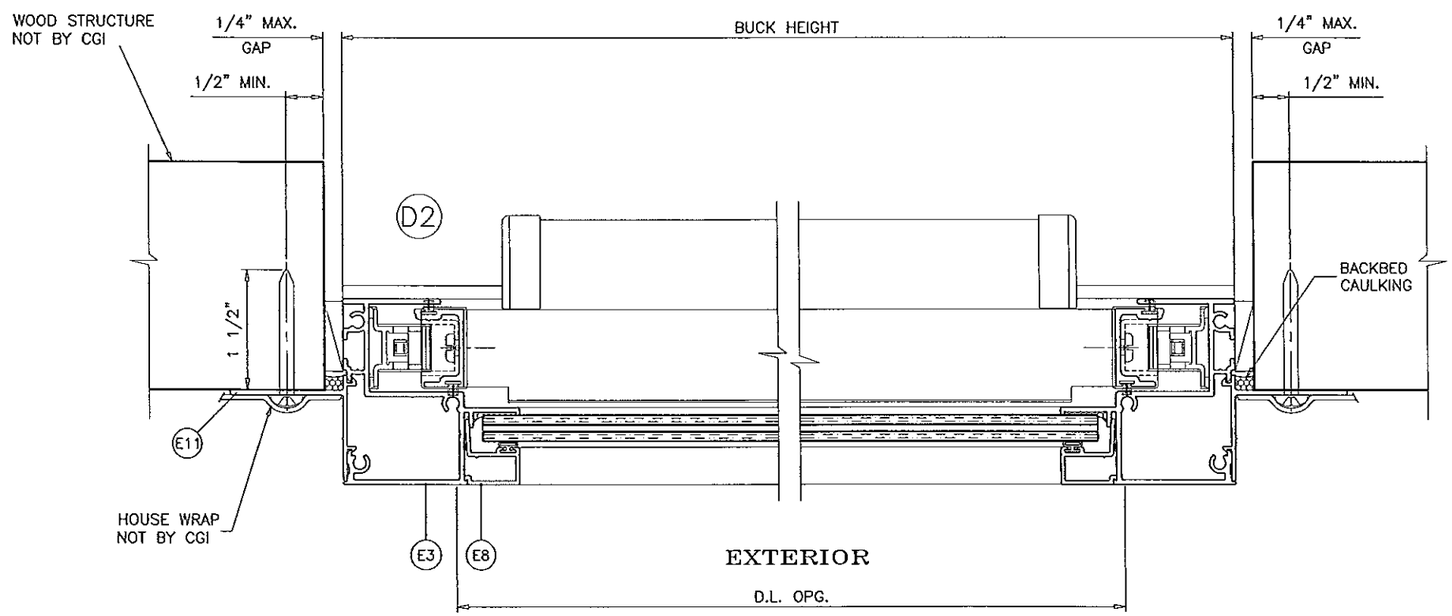

Engr: JAVAD AHMAD
CIVIL
FLA. PE # 70592
C.A.N. 3538

JAN 27 2015

PRODUCT REVISED
as complying with the Florida
Building Code
Acceptance No 14-0915.06
Expiration Date Sept. 22, 2020
By Manuel Perez
Miami-Dade Product Control

AL-FAROOQ CORPORATION
ENGINEERS & PRODUCT DEVELOPMENT
1235 S.W. 87 AVE
MIAMI, FLORIDA 33174
TEL. (305) 264-8100 FAX. (305) 262-6978

COMP-ANL\W10-03CGI

SERIES SENTINEL 110 ALUM S.H. WDW. (L.M.I./S.M.I.)

CGI WINDOWS & DOORS
10100 N.W. 25TH STREET
MIAMI, FL. 33172
TEL. (305) 593-6590 FAX. (305) 593-6592

revisions:

no	date	by	description
A	08.13.10		NO CHANGE THIS SHEET
B	09.09.14		UPDATED TO 2014 FBC

date: 02-02-10
scale: 1/2" = 1"
dr. by:
chk. by:

drawing no.
W10-03

ITEM	PART #	QUANTITY	DESCRIPTION	MATERIAL	MANF./SUPPLIER/REMARKS
E1	CGI-100	1	FRAME HEAD	6063-T6	--
E2	CGI-101	1	FRAME SILL	6063-T6	--
E3	CGI-102	2	FRAME JAMB	6063-T6	--
E4	CGI-103	1	MEETING RAIL	6063-T6	-
E5	CGI-104	1	LOCK RAIL	6063-T6	-
E6	CGI-105	1	HANDLE RAIL	6063-T6	-
E7	CGI-106	2	SASH RAIL	6063-T6	-
E8	CGI-107	AS REQD.	5/16" GLAZING BEAD	6063-T5	-
E9	CGI-108	AS REQD.	0.700" GLAZING BEAD	6063-T5	-
E10	CGI-109	AS REQD.	FRONT FLANGE ADAPTOR	6063-T6	--
E11	CGI-110	AS REQD.	NAIL FIN ADAPTOR	6063-T5	--
E12	CGI-135	1	FLANGE FRAME HEAD	6063-T6	-
E13	CGI-136	2	FLANGE FRAME JAMB	6063-T6	--
E14	CGI-137	1	FLANGE FRAME SILL	6063-T6	-
E17	CGI-605	OPTIONAL	SCREEN FRAME	6063-T5	-
M1	CGI-382V	AS REQD.	GLAZING BULB VINYL (DUROMETER 75-80 SHORE A)	PVC	--
M2	CGI-111	OPTIONAL	SCREW COVER	PVC	PROTOTYPE OR EQUIV.
M3	CGI-112	AS REQD.	EQUAL LEG COVER/SHIM, 3" LONG AT ANCHOR LOCATIONS	PVC	-
M4	--	2/ LITE	SETTING BLOCKS	EPDM	DUROMETER 80±5 SHORE A
M9	SUPER BOOST	2/ WDW.	SPIRAL BALANCE	-	BSI OR EQUIV.
M10	--	2/ WDW.	BLOCK/TACKLE BALANCE	-	BSI OR EQUIV.
M11	W23201NG	AS REQD.	PILE WITH CENTER FIN	WOOL	ULTRAFAB OR EQUIV.
M12	CGI-129	1/ WDW.	EGRESS LOCK	ALUM.	SULLIVAN
M13	CGI-131	2/ WDW.	HANDLE RAIL END CAP	NYLON	M&M
M14	E26018WN	-	D BULB-T SLOT	PVC	ULTRAFAB OR EQUIV.
M15	CGI-133	4/ WDW.	SASH GUIDE(SPIRAL BALANCE)	NYLON	M&M
M16	CGI-130	2/ WDW.	SASH TOP GUIDE(SPIRAL BALANCE)	NYLON	M&M
M17	A30730401-32	1/ WDW.	CAM LOCK	ZINC	TRUTH OR EQUIV.
M18	CGI-132	2/ WDW.	SASH STOP, 2" LONG	PVC	PROTOTYPE OR EQUIV.
M20	CGI-125	2/ WDW.	SASH CAM (B/T BALANCE)	NYLON	M&M
M21	-	2/ WDW.	B/T BALANCE TAKE OUT CLIP	-	BSI OR EQUIV.
M22	146-6	2/ WDW.	WEEP COVER	NYLON	AMESBURY OR EQUIV
M23	CGI-134	-	SILL SPACER	PVC	PROTOTYPE OR EQUIV.
S2	-	2 OR 3/CORNER	# 10 X 1 1/4" LG. PHL. PH. SMS. ST/ST. ASSEMBLY SCREW	-	-
S4	-	4/ WDW.	# 8 X 1/2" PH. SMS. ST/ST BALANCE BRACKET SCREW	-	-
S5	--	2/ WDW.	# 8 X 1" LG. FH. SMS. ST/ST. SPIRAL B. ASSEMBLY	-	-
S6	-	2/ LOCK	# 6 X 1/2" LG. FH. SMS. @ CGI-133 & CAM LOCK	-	-

Engr: JAVAD AHMAD
CIVIL
FLA. PE # 70592
C.A.N. 3538

JAN 27 2015

PRODUCT REVISED
as complying with the Florida
Building Code
Acceptance No 14-0915.06
Expiration Date Sept. 22, 2020
By Manuel Perez
Miami Dade Product Control

AL-FAROOQ CORPORATION
ENGINEERS & PRODUCT DEVELOPMENT
1235 S.W. 87 AVE
MIAMI, FLORIDA 33174
TEL. (305) 264-8100 FAX. (305) 262-6978
COMP-ANL\W10-03CGI

SERIES SENTINEL 110 ALUM S.H. WDW. (L.M.I./S.M.I.)

CGI WINDOWS & DOORS
10100 N.W. 25TH STREET
MIAMI, FL. 33172
TEL. (305) 593-6590 FAX. (305) 593-6592

revisions:

no	date	by	description
A	08.13.10		REV. PER BCCO COMMENTS
B	09.09.14		UPDATED TO 2014 FBC

date: 02-02-10
scale: 1/2" = 1"
dr. by:
chk. by:

drawing no.
W10-03

sheet 8 of 9

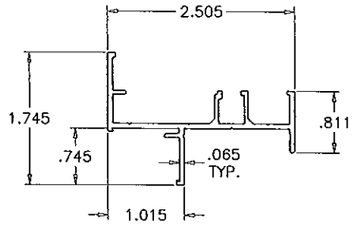

E12 FLANGE FRAME HEAD

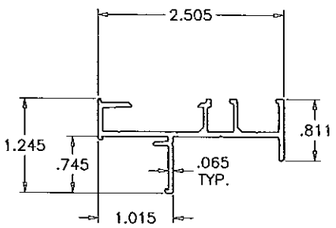

E1 FLUSH FRAME HEAD

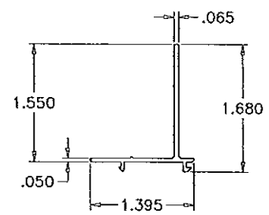

E11 NAIL FIN ADAPTER

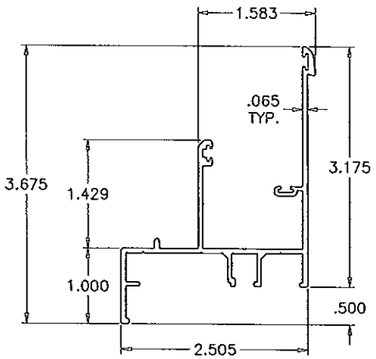

E14 FLANGE FRAME SILL

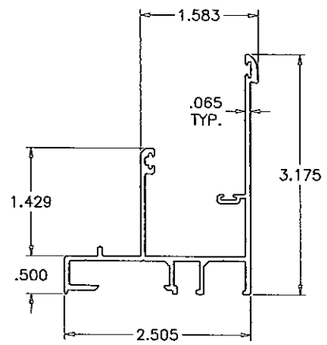

E2 FLUSH FRAME SILL

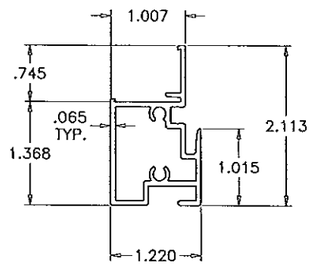

E4 MEETING RAIL

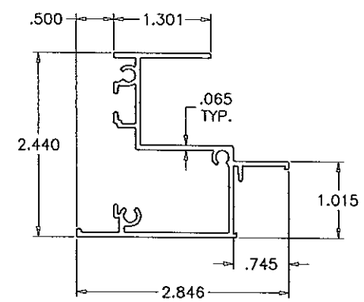

E13 FLANGE FRAME JAMB

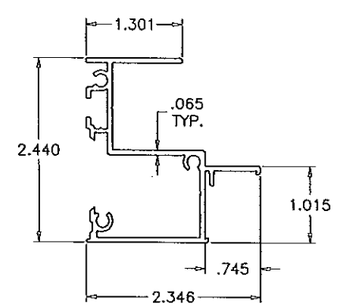

E3 FLUSH FRAME JAMB

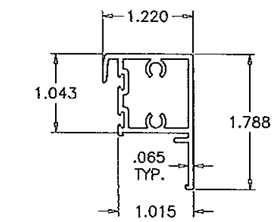

E5 LOCK RAIL

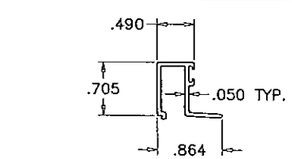

E8 5/16" GLAZING BEAD

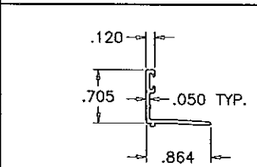

E9 .700" GLAZING BEAD

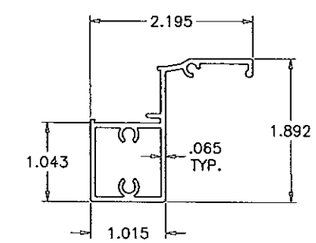

E6 HAND RAIL

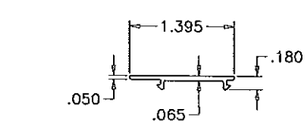

M3 FLUSH FRAME COVER

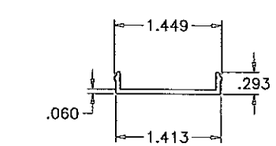

M19 SCREW COVER

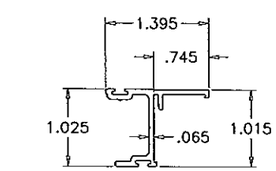

E7 SASH RAIL

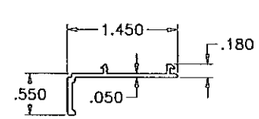

E10 FLANGE ADAPTOR

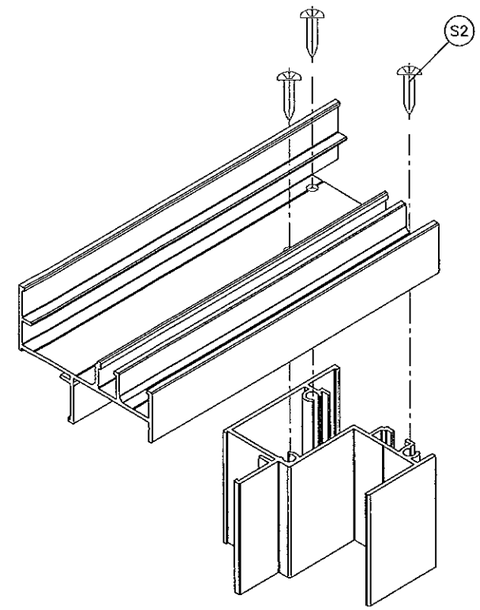

FRAME TOP CORNER

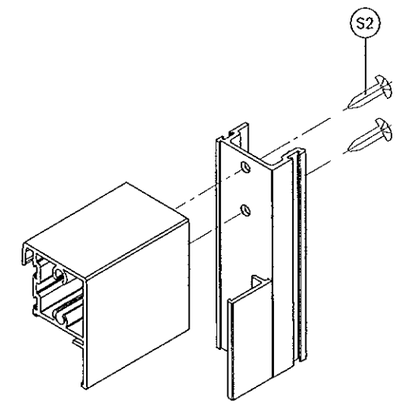

VENT TOP CORNER

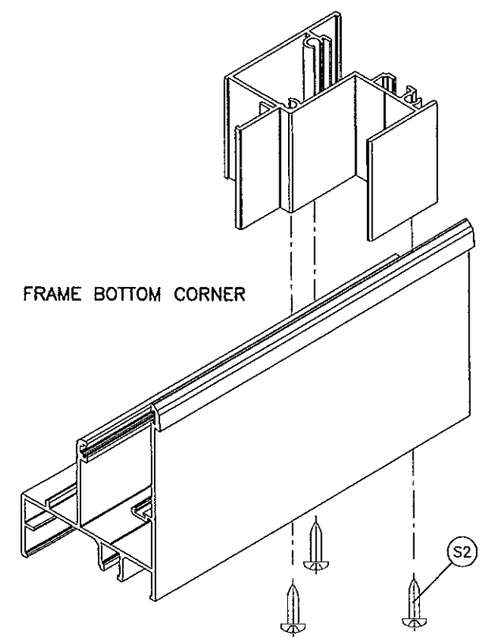

FRAME BOTTOM CORNER

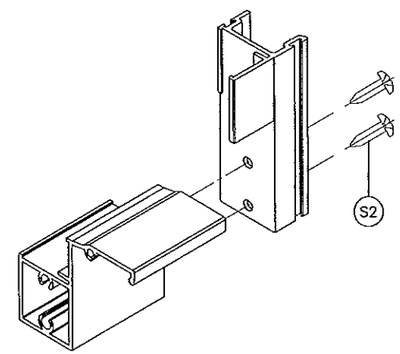

VENT BOTTOM CORNER

Engr: JAVAD AHMAD
CIVIL
FLA. PE # 70592
C.A.N. 3538

JAN 27 2015

PRODUCT REVISED
as complying with the Florida
Building Code
Acceptance No 14-0915.06
Expiration Date Sept. 22, 2020
By Miami Dade Product Control

AL-FAROOQ CORPORATION
ENGINEERS & PRODUCT DEVELOPMENT
1235 S.W. 87 AVE
MIAMI, FLORIDA 33174
TEL. (305) 264-8100 FAX. (305) 262-6978

COMP-ANL\W10-03CGI

SERIES SENTINEL 110 ALUM S.H. WDW. (L.M.I./S.M.I.)

CGI WINDOWS & DOORS
10100 N.W. 25TH STREET
MIAMI, FL. 33172
TEL. (305) 593-6590 FAX. (305) 593-6592

revisions:

no	date	by	description
A	08.13.10		NO CHANGE THIS SHEET
B	09.09.14		UPDATED TO 2014 FBC

date: 02-02-10
scale: 1/2" = 1"
dr. by:
chk. by:

drawing no.
W10-03

sheet 9 of 9