MIAMI-DADE COUNTY
PRODUCT CONTROL SECTION
11805 SW 26 Street, Room 208
Miami, Florida 33175-2474
T (786) 315-2590 F (786) 315-2599
www.miamidade.gov/economy

DEPARTMENT OF REGULATORY AND ECONOMIC RESOURCES (RER)
BOARD AND CODE ADMINISTRATION DIVISION

NOTICE OF ACCEPTANCE (NOA)

Ruskin Company
3900 Dr. Greaves Road
Grandview, MO 64030

SCOPE:

This NOA is being issued under the applicable rules and regulations governing the use of construction materials. The documentation submitted has been reviewed and accepted by Miami-Dade County RER-Product Control Section to be used in Miami Dade County and other areas where allowed by the Authority Having Jurisdiction (AHJ).

This NOA shall not be valid after the expiration date stated below. The Miami-Dade County Product Control Section (In Miami Dade County) and/or the AHJ (in areas other than Miami Dade County) reserve the right to have this product or material tested for quality assurance purposes. If this product or material fails to perform in the accepted manner, the manufacturer will incur the expense of such testing and the AHJ may immediately revoke, modify, or suspend the use of such product or material within their jurisdiction. RER reserves the right to revoke this acceptance, if it is determined by Miami-Dade County Product Control Section that this product or material fails to meet the requirements of the applicable building code.

This product is approved as described herein, and has been designed to comply with the Florida Building Code, including the High Velocity Hurricane Zone.

DESCRIPTION: Model HZ850 Aluminum Combination Louver

APPROVAL DOCUMENT: Drawing No. **60-022354-00B**, titled "HZ850 Louver", sheets 1 through 20 of 21 (including sheet 3A), dated 09/05/2014, with revision B dated 05/21/2015, prepared by Ruskin Company, signed and sealed by Chelsea G. Welch, P.E., bearing the Miami-Dade County Product Control approval stamp with the Notice of Acceptance number and approval date by the Miami-Dade County Product Control Section.

MISSILE IMPACT RATING: Large and Small Missile Impact Resistant

LABELING: Each unit shall bear a permanent label with the manufacturer's name or logo, Geneva, AL, model/series, and following statement: "Miami-Dade County Product Control Approved", unless otherwise noted herein.

RENEWAL of this NOA shall be considered after a renewal application has been filed and there has been no change in the applicable building code negatively affecting the performance of this product.

TERMINATION of this NOA will occur after the expiration date or if there has been a revision or change in the materials, use, and/or manufacture of the product or process. Misuse of this NOA as an endorsement of any product, for sales, advertising or any other purposes shall automatically terminate this NOA. Failure to comply with any section of this NOA shall be cause for termination and removal of NOA.

ADVERTISEMENT: The NOA number preceded by the words Miami-Dade County, Florida, and followed by the expiration date may be displayed in advertising literature. If any portion of the NOA is displayed, then it shall be done in its entirety.

INSPECTION: A copy of this entire NOA shall be provided to the user by the manufacturer or its distributors and shall be available for inspection at the job site at the request of the Building Official.

This NOA consists of this page 1 and evidence page E-1, as well as approval document mentioned above.

The submitted documentation was reviewed by **Carlos M. Utrera, P.E.**

MIAMI-DADE COUNTY APPROVED

07/09/2015

NOA No. 14-0918.06
Expiration Date: July 16, 2020
Approval Date: July 16, 2015

NOTICE OF ACCEPTANCE: EVIDENCE SUBMITTED

A. DRAWINGS

1. Drawing No. **60-022354-00B**, titled "HZ850 Louver" sheets 1 through 20 of 21 (including sheet 3A), dated 09/05/2014, with revision B dated 05/21/2015, prepared by Ruskin Company, signed and sealed by Chelsea G. Welch, P.E.

B. TESTS

1. Test reports on 1) Uniform Static Air Pressure Test, Loading per FBC TAS 202-94
   2) Large Missile Impact Test per FBC, TAS 201-94 (Level E, 80 fps)
   3) Cyclic Wind Pressure Loading per FBC, TAS 203-94
   along with marked-up drawings and installation diagram of Model HZ850 Louvers Assemblies, prepared by Intertek-Architectural Testing, Inc., Test Report No. **D6033.01-401-18**, dated 09/11/2014, with revision 1 dated 01/19/2015, signed and sealed by Shawn G. Collins, P.E.
2. Test report on High Velocity Wind Driven Rain Resistance per AMCA 550-09 of a Combination Louver Model HZ850 with rear louver blade EME6325D, prepared by PRI Construction Materials Technologies, LLC, Test Report No. **RCV-024-02-01,** dated 04/23/2015, signed and sealed by Duc T. Nguyen, P.E.

C. CALCULATIONS

1. Wind load bending and anchoring calculations dated 09/03/2014, prepared by Ruskin Company, signed and sealed by Chelsea G. Welch, P.E.

D. QUALITY ASSURANCE

1. Miami-Dade Department of Regulatory and Economic Resources (RER)

E. MATERIAL CERTIFICATIONS

1. Test report on impact test per AMCA 540-13 of a Model HZ850 Aluminum Louver System, prepared by Intertek-Architectural Testing, Inc., Test Report No. **E6971.01-401-44**, dated 05/13/2015, with revision 3 dated 06/11/2015, signed and sealed by Justin P. McDonald, P.E.

F. STATEMENTS

1. Statement letter of code conformance to 2010 FBC issued by Ruskin Company, dated 09/03/2014, signed and sealed by Chelsea G. Welch, P.E.
2. No financial interest letter issued by Ruskin Company, dated 09/03/2014, signed and sealed by Chelsea G. Welch, P.E.

07/09/2015

Carlos M. Utrera, P.E.
Product Control Examiner
NOA No. 14-0918.06
Expiration Date: July 16, 2020
Approval Date: July 16, 2015

NOTES:

1. THE HZ850 HAS BEEN TESTED IN ACCORDANCE WITH FLORIDA PROTOCOLS TAS-201, 202, & 203 FOR LARGE MISSILE IMPACT, UNIFORM PRESSURE AND CYCLIC WIND PRESSURE.

2. THIS LOUVER SYSTEM IS APPROVED FOR APPLICATIONS WITH DESIGN PRESSURES OF +/- 130 PSF OR LESS.

3. AMCA 550 WIND DRIVEN RAIN TEST HAS BEEN PERFORMED ON THIS COMBINATION LOUVER. ⟨B⟩

4. THIS LOUVER SYSTEM IS NON-BEARING AND IS NOT DESIGNED TO WITHSTAND BUILDING DEAD LOADS.

5. IT SHALL BE THE RESPONSIBILITY OF PERMIT HOLDER/BUILDING DESIGN ENGINEER OF RECORD TO VERIFY THE STRUCTURAL INTEGRITY OF THE STRUCTURE TO SUPPORT THE LOADS IMPOSED BY THIS LOUVER SYSTEM.

6. MAXIMUM SINGLE SECTION SIZE: 144" WIDE X 96" HIGH.

7. MAXIMUM ASSEMBLED LOUVER SIZE: UNLIMITED WIDE X 96" HIGH W/ MULLIONS AT 96" O.C. MAX. (48" O.C. MAX. BLADE SPAN).

8. SECTIONS OR ASSEMBLIES MAY BE STACKED VERTICALLY PROVIDED A SUITABLE STRUCTURAL SUPPORT IS DESIGNED AND INSTALLED BY OTHERS TO SUPPORT ALL LOADS TRANSFERRED FROM THE LOUVER.

9. CMU BLOCKS MUST BE TYPE 1, GRADE N, LIGHT, MEDIUM OR NORMAL WEIGHT CONFORMING TO ASTM C90. CMU BLOCKS MUST BE FULLY GROUTED WITH COARSE GROUT CONFORMING TO FLORIDA BUILDING CODE SECTION 2122.8. TYPE N, S OR M MORTAR MUST COMPLY WITH FLORIDA BUILDING CODE SECTION 2119.12. MASONRY COMPRESSIVE STRENGTH MUST BE AT LEAST1500 PSI AT THE TIME OF INSTALLATION.

10. ABBREVIATIONS: ALUM. IS ALUMINUM, STL. IS STEEL, HWH IS HEX WASHER HEAD.

11. CARBON STEEL AND OTHER NON-COMPATIBLE METALS CONTACTING ALUMINUM SHALL BE PROTECTED BY PAINT OR OTHER MEANS PER FLORIDA BUILDING CODE SECTION 2003.8.4.2.

12. ALL FASTENERS SHALL BE CORROSION RESISTANT. ⟨A⟩

DRAWING INDEX:

60-022354-00B SHEET 1 OF 21 - NOTES AND DRAWING INDEX
60-022354-00B SHEET 2 OF 21 - ASSEMBLY 'A' & DETAILS
60-022354-00B SHEET 3 OF 21 - ASSEMBLY 'B' & DETAILS
60-022354-00B SHEET 3A OF 21 - ASSEMBLY DETAILS ⟨A⟩
60-022354-00B SHEET 4 OF 21 - WOOD SUBSTRATE CONNECTION DETAILS
60-022354-00B SHEET 5 OF 21 - WOOD SUBSTRATE CONNECTION DETAILS
60-022354-00B SHEET 6 OF 21 - STEEL SUBSTRATE CONNECTION DETAILS
60-022354-00B SHEET 7 OF 21 - STEEL SUBSTRATE CONNECTION DETAILS
60-022354-00B SHEET 8 OF 21 - STEEL SUBSTRATE CONNECTION DETAILS
60-022354-00B SHEET 9 OF 21 - STEEL SUBSTRATE CONNECTION DETAILS
60-022354-00B SHEET 10 OF 21 - CONCRETE SUBSTRATE CONNECTION DETAILS
60-022354-00B SHEET 11 OF 21 - CONCRETE SUBSTRATE CONNECTION DETAILS
60-022354-00B SHEET 12 OF 21 - CMU SUBSTRATE CONNECTION DETAILS
60-022354-00B SHEET 13 OF 21 - CMU SUBSTRATE CONNECTION DETAILS
60-022354-00B SHEET 14 OF 21 - PART DETAILS
60-022354-00B SHEET 15 OF 21 - PART DETAILS
60-022354-00B SHEET 16 OF 21 - PART DETAILS
60-022354-00B SHEET 17 OF 21 - PART DETAILS
60-022354-00B SHEET 18 OF 21 - PART DETAILS
60-022354-00B SHEET 19 OF 21 - PART DETAILS
60-022354-00B SHEET 20 OF 21 - SUPPORT TABLE

Approved as complying with the Florida Building Code
Date 07/16/2015
NOA# 14-0918.06
Miami Dade Product Control
By

FOR OFFICE USE ONLY

ENGINEER OF RECORD SEAL

CHELSEA G. WELCH LICENSE No 67221 STATE OF FLORIDA PROFESSIONAL ENGINEER
7/16/2015

TOLERANCES
DECIMAL DIMENSIONS:
3 PLACE - XXX +.010
2 PLACE - XX +.020
FRACTION DIMENSIONS: +1/16
ANGLE DIMENSIONS +2°
USE WID-007 & 008
UNLESS SPECIFIED OTHERWISE

ENGINEER OF RECORD	CHELSEA G. WELCH			
ENGINEERING DISCIPLINE	CIVIL/STRUCTURAL ENGINEERING			
REGISTRATION NUMBER	FL# 67221			
DWN. BY: JDL	CHK. BY: RKP	APP'D. BY: CGW	APP'D. BY:	
DATE: 8/21/14	DATE: 9/3/14	DATE: 9/5/14	DATE:	

CHANGE LETTER	REVISION DESCRIPTION	DWN. BY:	CHK'D. BY:	APP'D. BY:	APP'D. BY:	DATE
B	REVISED NOTE 3	NMM	RKP	CGW		5/21/15
A	ADDED NOTE, ADDED SHEET TO DRAWING INDEX	JDL	RKP	CGW		1/6/15

RUSKIN Air & Sound Control
3900 DR. GREAVES RD
GRANDVIEW, MO 64030

PLOT SCALE: NONE
ECN:

TITLE
HZ850 LOUVER
DADE COUNTY
APPROVAL DRAWINGS

DWG. NO.
60-022354-00B
SHEET 1 OF 21

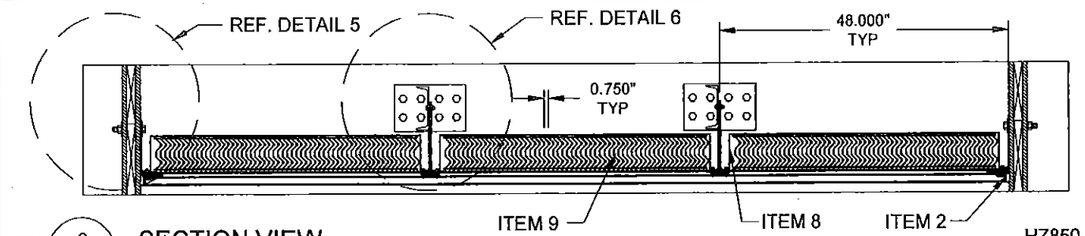

B 2 - SECTION VIEW HZ850

N.T.S.

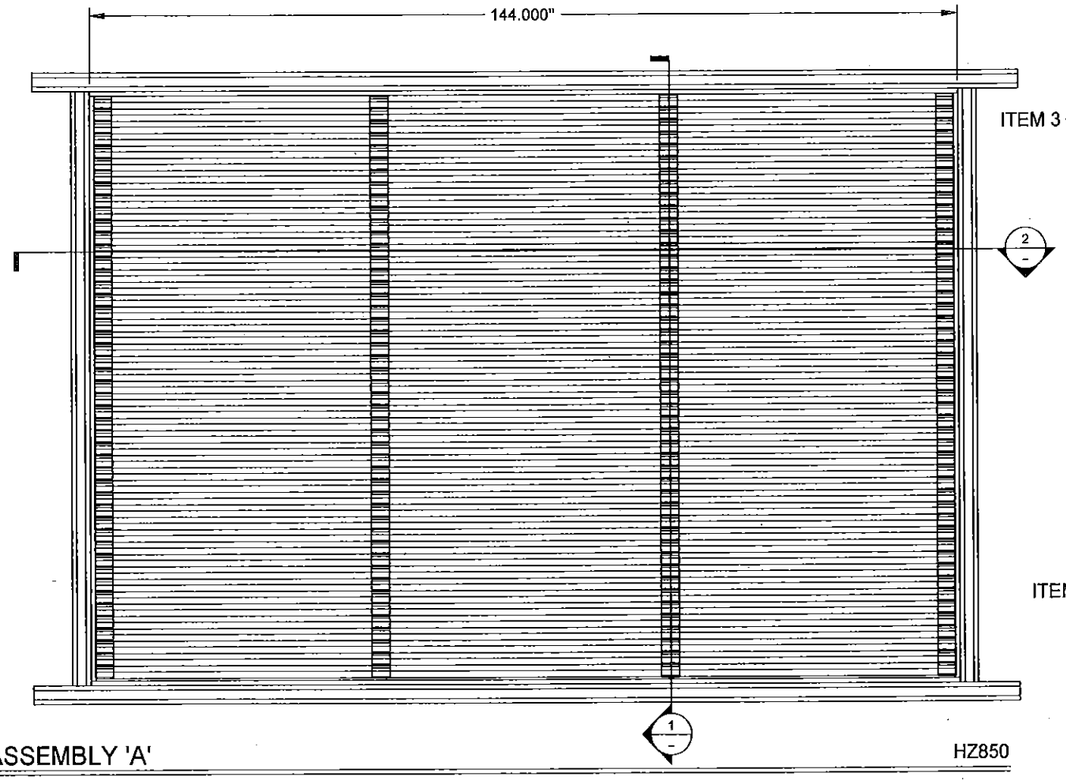

ASSEMBLY 'A' HZ850

N.T.S. FRONT VIEW

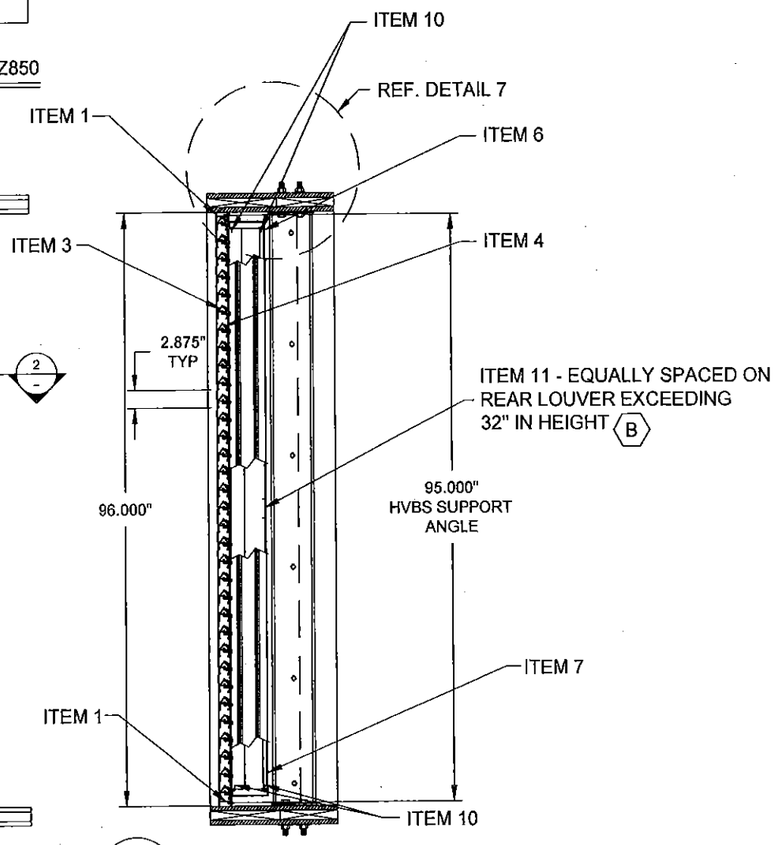

1 - SECTION VIEW HZ850

N.T.S.

CHANGE LETTER	REVISION DESCRIPTION	DWN. BY:	CHK'D. BY:	APPV'D. BY:	APPV'D. BY:	DATE
B	REVISED REAR LOUVER BLADES	NMM	RKP	CGW		5/21/15
A	NO CHANGES ON THIS SHEET	JDL	RKP	CGW		1/6/15

Approved as complying with the Florida Building Code
Date 07/16/2015
NOA# 14-0918.06
Miami Dade Product Control
By

FOR OFFICE USE ONLY

ENGINEER OF RECORD SEAL

CHELSEA G. WELCH LICENSE No 67221 STATE OF FLORIDA PROFESSIONAL ENGINEER

7/26/2015

TOLERANCES:
DECIMAL DIMENSIONS:
3 PLACE .XXX +.010
2 PLACE .XX +.020
FRACTION DIMENSIONS: + 1/16
ANGLE DIMENSIONS + 2°
USE WI-Q-007 & 008
UNLESS SPECIFIED OTHERWISE

ENGINEER OF RECORD: CHELSEA G. WELCH
ENGINEERING DISCIPLINE: CIVIL/STRUCTURAL ENGINEERING
REGISTRATION NUMBER: FL# 67221

DWN. BY:	CHK. BY:	APPV'D BY:	APPV'D. BY:
JDL	RKP	CGW	
DATE: 8/21/14	DATE: 9/3/14	DATE: 9/5/14	DATE:

RUSKIN Air & Sound Control
3900 DR. GREAVES RD
GRANDVIEW, MO 64030

PLOT SCALE: NONE
ECN:

TITLE: HZ850 LOUVER ASSEMBLY 'A' & DETAILS

DWG. NO. 60-022354-00B

SHEET 2 OF 21

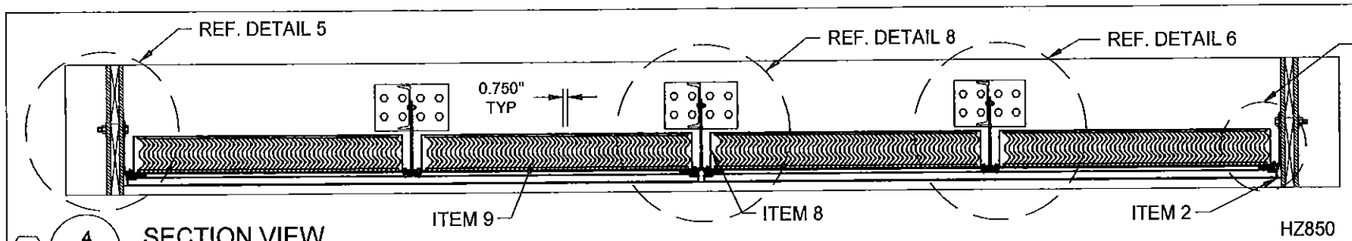

B 4 - SECTION VIEW HZ850

N.T.S.

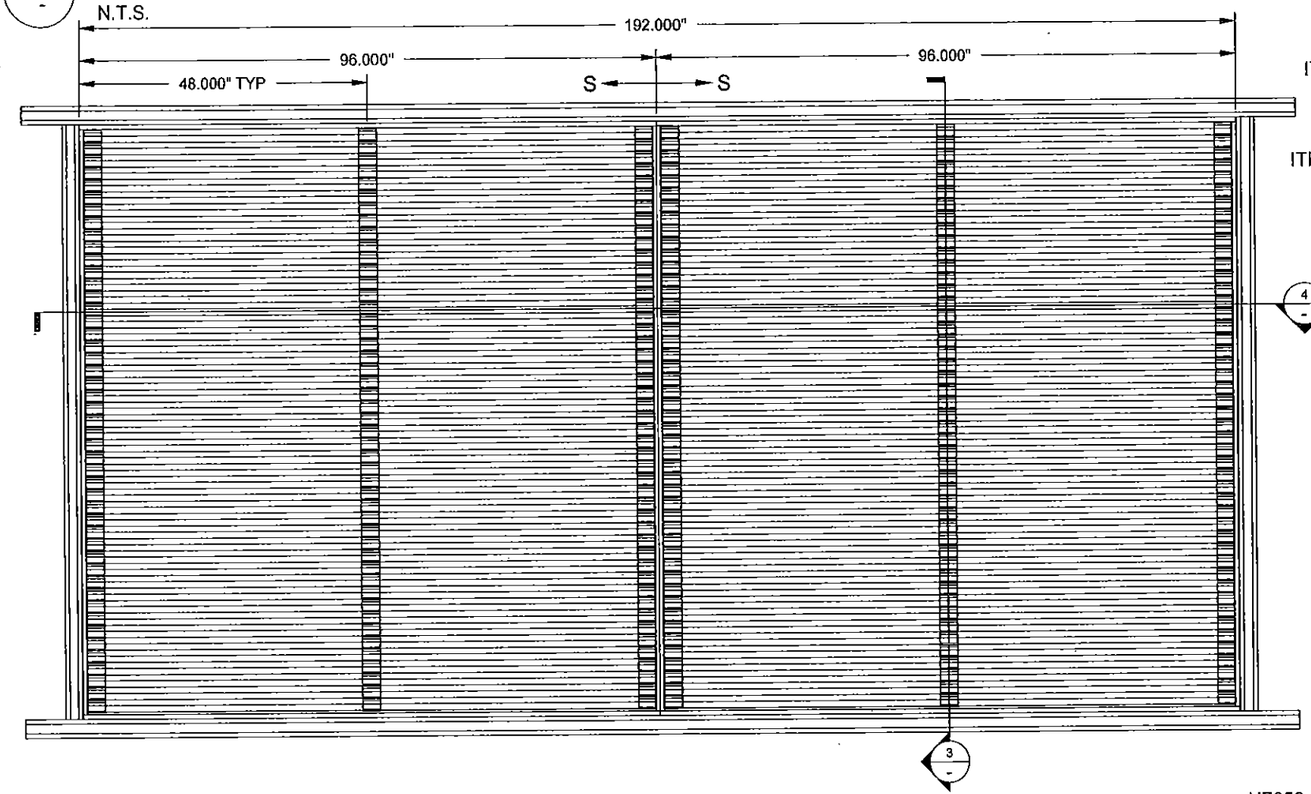

ASSEMBLY 'B' HZ850

N.T.S. FRONT VIEW

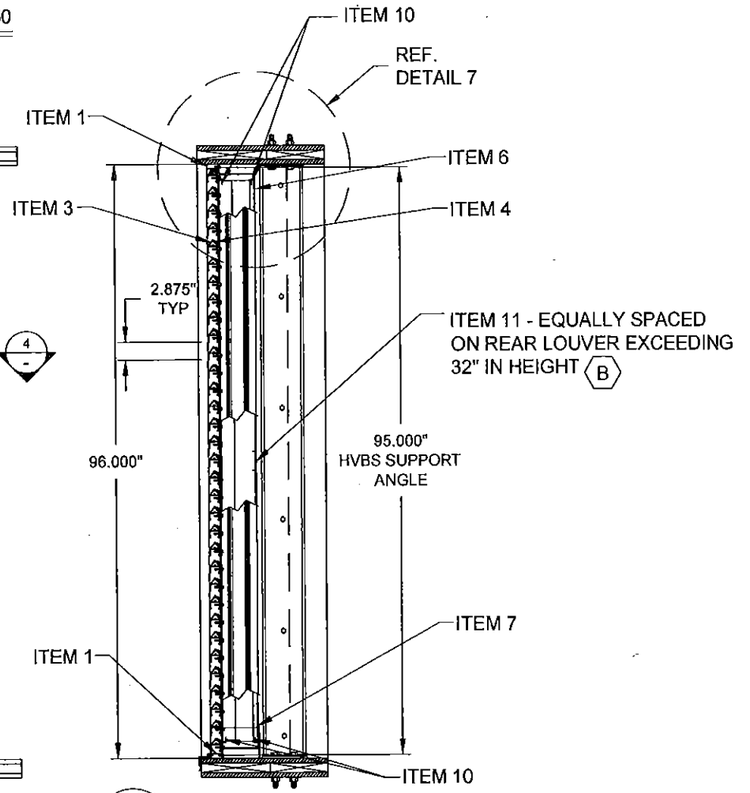

3 - SECTION VIEW HZ850

N.T.S.

CHANGE LETTER	REVISION DESCRIPTION	DWN. BY:	CHK'D. BY:	APPV'D. BY:	APPV'D. BY:	DATE
B	REVISED REAR LOUVER BLADES	NMM	RKP	CGW		5/21/15
A	NO CHANGES ON THIS SHEET	JDL	RKP	CGW		1/6/15

Approved as complying with the Florida Building Code
Date 07/16/2015
NOA# 14-0918.06
Miami Dade Product Control
By

FOR OFFICE USE ONLY

ENGINEER OF RECORD SEAL

CHELSEA G. WELCH LICENSE No 67221 STATE OF FLORIDA PROFESSIONAL ENGINEER 7/16/2015

TOLERANCES
DECIMAL DIMENSIONS:
3 PLACE .XXX +-1/10
2 PLACE .XX +-1/32
FRACTION DIMENSIONS: + 1/16
ANGLE DIMENSIONS + 2°
USE WHQ-007 & 008
UNLESS SPECIFIED OTHERWISE

ENGINEER OF RECORD: CHELSEA G. WELCH
ENGINEERING DISCIPLINE: CIVIL/STRUCTURAL ENGINEERING
REGISTRATION NUMBER: FL# 67221

DWN. BY:	CHK. BY:	APPV'D. BY:	APPV'D. BY:
JDL	RKP	CGW	
DATE: 8/21/14	DATE: 9/3/14	DATE: 9/5/14	DATE:

RUSKIN Air & Sound Control
3900 DR. GREAVES RD
GRANDVIEW, MO 64030

PLOT SCALE: NONE
ECN:

TITLE: HZ850 LOUVER ASSEMBLY 'B' & DETAILS

DWG. NO. 60 - 022354 - 00B

SHEET 3 OF 21

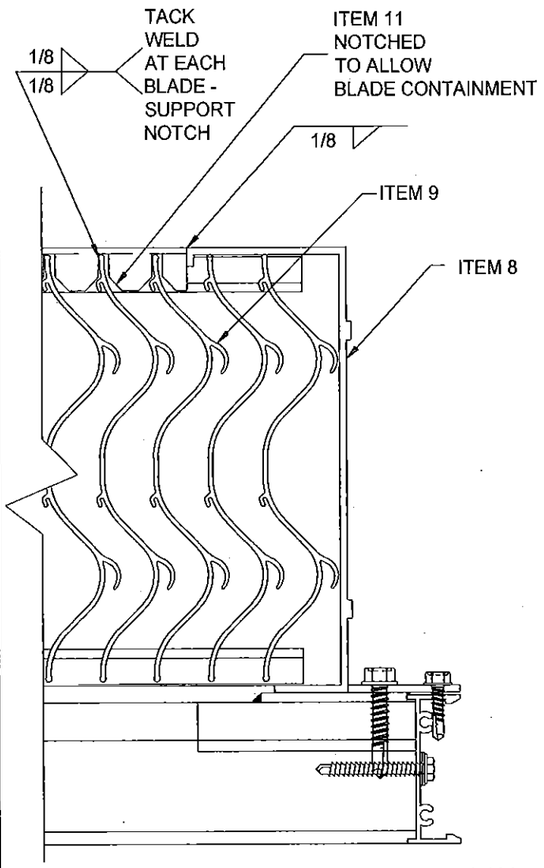

B 6G - REAR LOUVER HORIZONTAL BLADE SUPPORT DETAIL HZ850

N.T.S.

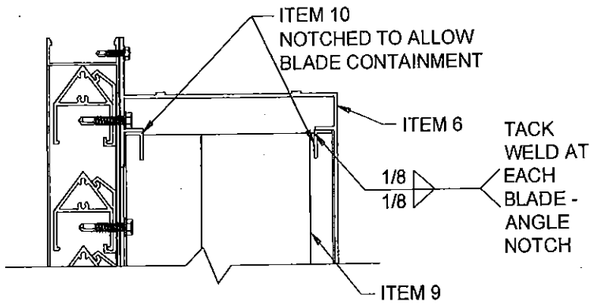

6H - REAR LOUVER BLADE END ANGLE DETAIL @ HEAD HZ850

N.T.S.

DETAIL @ SILL SIMILAR

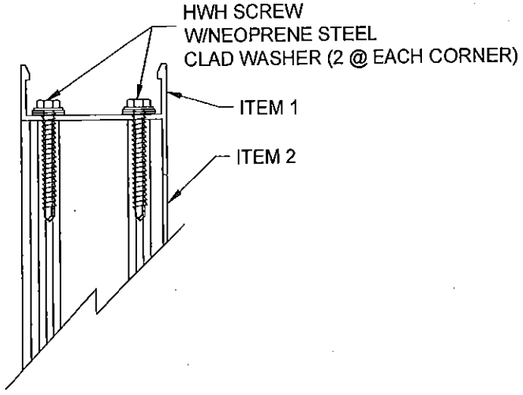

6J - FRONT LOUVER FRAME CONSTRUCTION DETAIL @ HEAD HZ850

N.T.S.

DETAIL @ SILL SIMILAR
REAR OF FRAMES COPED, BUTTED AND MECHANICALLY FASTENED AT FRAME SCREW BOSS LOCATIONS

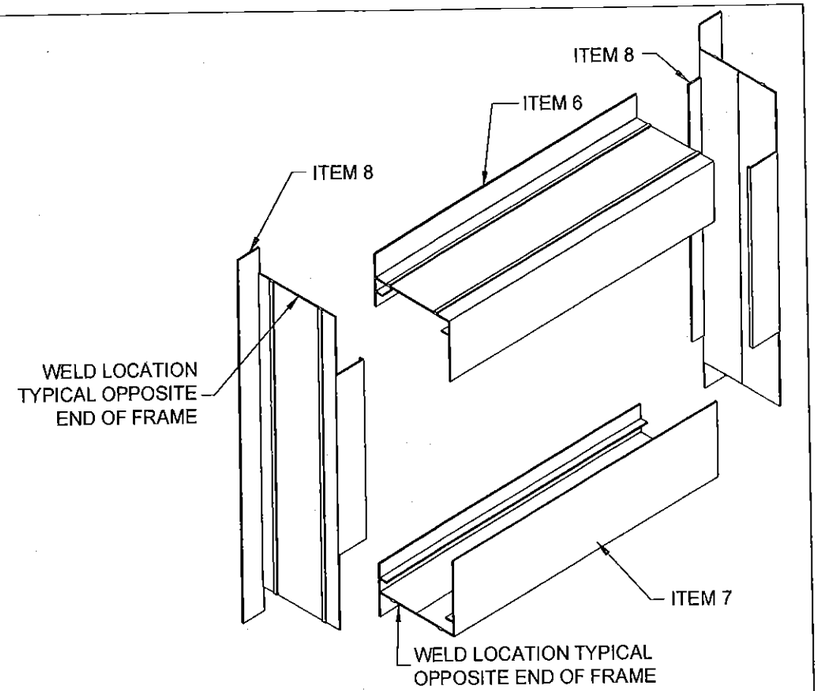

6K - REAR LOUVER FRAME CONST. DETAIL HZ850

N.T.S.

FRAMES COPED, BUTTED AND FULLY WELDED ACROSS ENTIRE JOINT

Approved as complying with the Florida Building Code
Date 07/16/2015
NOA# 14-0918.06
Miami Dade Product Control
By

FOR OFFICE USE ONLY

ENGINEER OF RECORD SEAL

CHELSEA G. WELCH LICENSE No 67221 STATE OF FLORIDA PROFESSIONAL ENGINEER

7/16/2015

TOLERANCES:
DECIMAL DIMENSIONS:
2 PLACE .XX +/-.010
3 PLACE .XXX +/-.005
FRACTION DIMENSIONS: +/-1/16
ANGLE DIMENSIONS +/-2°
USE WI-0407 & 008
UNLESS SPECIFIED OTHERWISE

ENGINEER OF RECORD	CHELSEA G. WELCH			
ENGINEERING DISCIPLINE	CIVIL/STRUCTURAL ENGINEERING			
REGISTRATION NUMBER	FL# 67221			
DWN. BY: JDL	CHK. BY: RKP	APP'D. BY: CGW	APP'D. BY:	
DATE: 8/21/14	DATE: 9/3/14	DATE: 9/5/14	DATE:	

CHANGE LETTER	REVISION DESCRIPTION	DWN. BY:	CHK'D BY:	APP'D. BY:	APP'D. BY:	DATE
B	REVISED DETAIL 6G/-	NMM	RKP	CGW		5/21/15
A	ADDED THIS SHEET	JDL	RKP	CGW		1/6/15

RUSKIN Air & Sound Control
3900 DR. GREAVES RD
GRANDVIEW, MO 64030

PLOT SCALE: NONE
ECN:

TITLE: HZ850 LOUVER ASSEMBLY DETAILS

DWG. NO. 60-022354-00B

SHEET 3A OF 21

HVBS	'X' DIM.
C7x9.8	3.5"
C6x8.2	3.0"
C5x6.7	2.5"
C4x5.4	2.0"
C3x4.1	1.5"

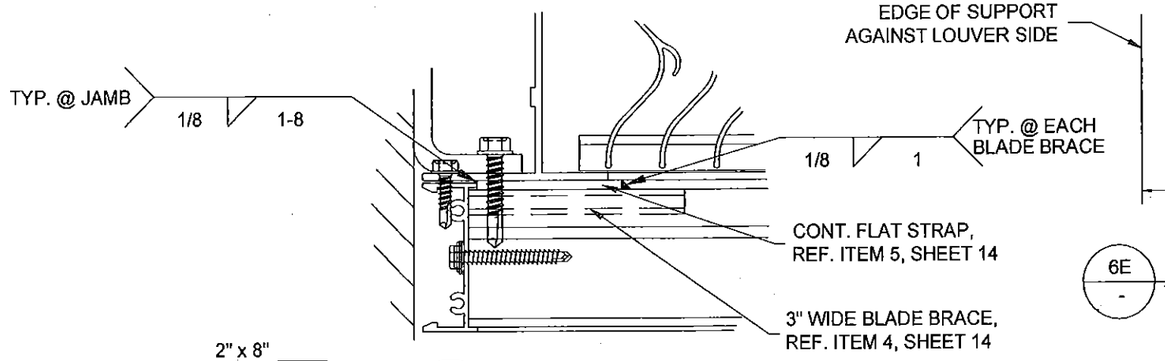

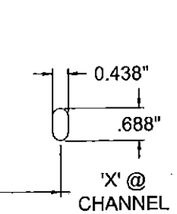

6E - HVBS SLOT DETAIL

N.T.S.

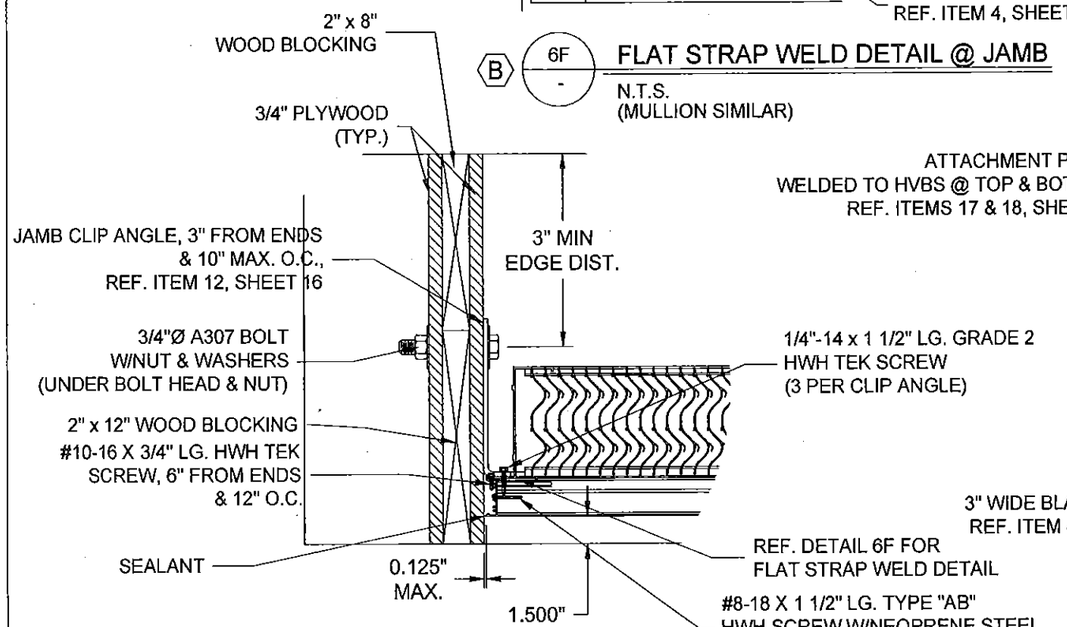

B 6F - FLAT STRAP WELD DETAIL @ JAMB

N.T.S.
(MULLION SIMILAR)

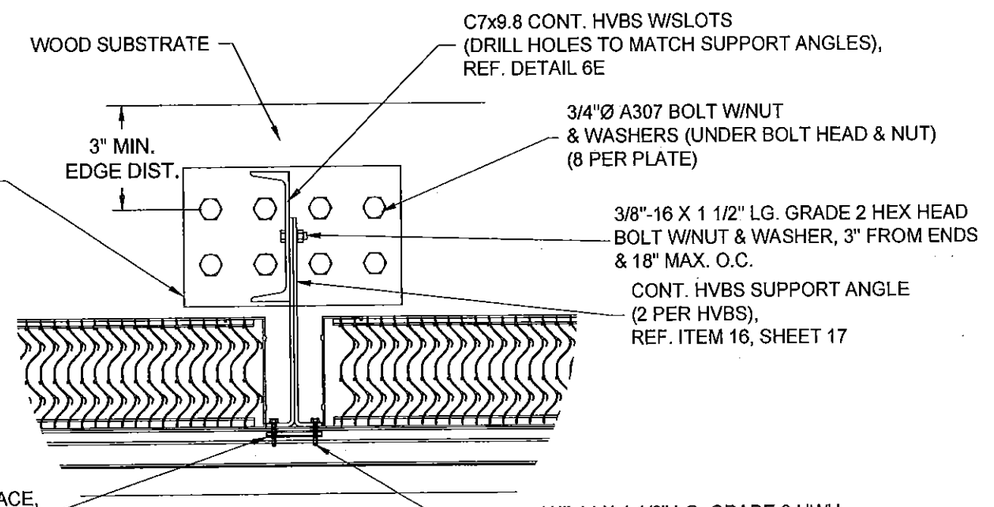

B 6 - CONNECTION DETAIL @ HEAD/SILL HZ850

N.T.S.
WOOD SUBSTRATE
(3" MIN. THICKNESS, MIN. S.G. = 0.42)

B 5 - CONNECTION DETAIL @ JAMB HZ850

N.T.S.
WOOD SUBSTRATE
(3" MIN. THICKNESS, MIN. S.G. = 0.42)

* FOR SMALLER ASSEMBLIES, REFER TO SUPPORT TABLE ON SHEET 20.

CHANGE LETTER	REVISION DESCRIPTION	DWN. BY:	CHK'D. BY:	APPV'D. BY:	APPV'D. BY:	DATE
B	REVISED REAR LOUVER BLADES	NMM	RKP	CGW		5/21/15
A	NO CHANGES ON THIS SHEET	JDL	RKP	CGW		1/6/15

Approved as complying with the Florida Building Code
Date 07/16/2015
NOA# 14-0918.06
Miami Dade Product Control
By

FOR OFFICE USE ONLY

ENGINEER OF RECORD SEAL

CHELSEA G. WELCH LICENSE No 67221 STATE OF FLORIDA PROFESSIONAL ENGINEER
5/26/20

TOLERANCES
DECIMAL DIMENSIONS:
3 PLACE .XXX +.010
2 PLACE .XX +.020
FRACTION DIMENSIONS: +1/16
ANGLE DIMENSIONS +2°
USE WIQ-007 & 008
UNLESS SPECIFIED OTHERWISE

ENGINEER OF RECORD: CHELSEA G. WELCH
ENGINEERING DISCIPLINE: CIVIL/STRUCTURAL ENGINEERING
REGISTRATION NUMBER: FL# 67221

DWN. BY:	CHK. BY:	APPV'D. BY:	APPV'D. BY:
JDL	RKP	CGW	
DATE: 8\21\14	DATE: 9/3/14	DATE: 9/5/14	DATE:

RUSKIN Air & Sound Control
3900 DR. GREAVES RD
GRANDVIEW, MO 64030

PLOT SCALE: NONE
ECN:

TITLE: HZ850 LOUVER WOOD SUBSTRATE CONNECTION DETAILS

DWG. NO. 60-022354-00B

SHEET 4 OF 21

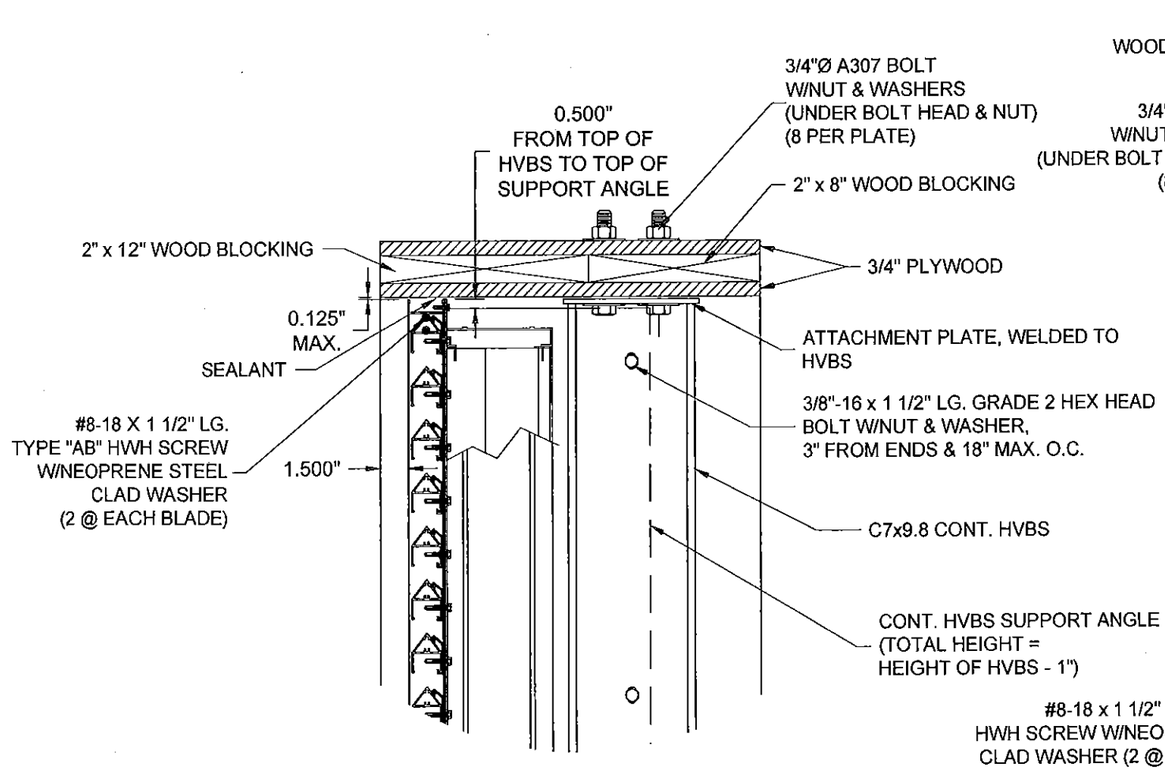

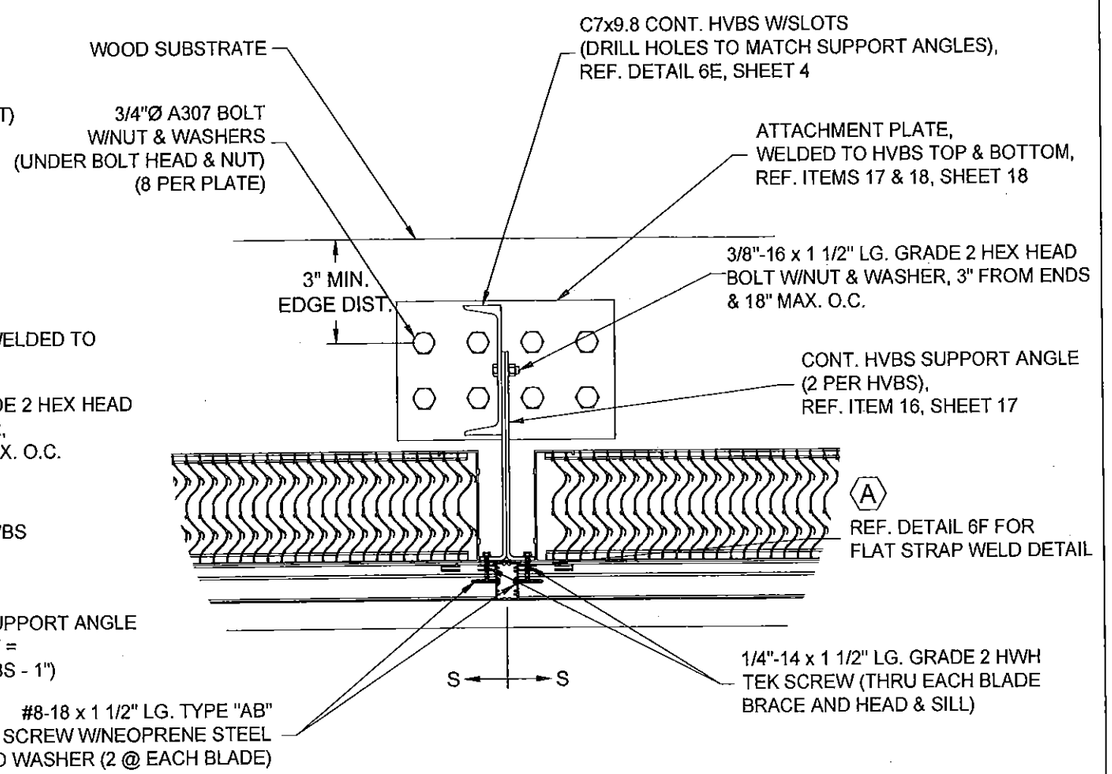

7 / - CONNECTION DETAIL @ HEAD HZ850

N.T.S.
WOOD SUBSTRATE
(3" MIN. THICKNESS, MIN. S.G. = 0.42)
(SILL SIMILAR)

B 8 / - CONNECTION DETAIL @ HEAD/SILL (MULLION) HZ850

N.T.S.
WOOD SUBSTRATE
(3" MIN. THICKNESS, MIN. S.G. = 0.42)

* FOR SMALLER ASSEMBLIES, REFER TO SUPPORT TABLE ON SHEET 20.

Approved as complying with the Florida Building Code
Date 07/16/2015
NOA# 14-0918.06
Miami Dade Product Control
By

FOR OFFICE USE ONLY

ENGINEER OF RECORD SEAL

CHELSEA G. WELCH
LICENSE
No 67221
STATE OF FLORIDA
PROFESSIONAL ENGINEER
7/26/2015

TOLERANCES:
DECIMAL DIMENSIONS:
3 PLACE .XXX +.010
2 PLACE .XX +.020
FRACTION DIMENSIONS: + 1/16
ANGLE DIMENSIONS + 2°
USE WIQ-007 & 008
UNLESS SPECIFIED OTHERWISE

ENGINEER OF RECORD	CHELSEA G. WELCH
ENGINEERING DISCIPLINE	CIVIL/STRUCTURAL ENGINEERING
REGISTRATION NUMBER	FL# 67221

DWN. BY:	CHK. BY:	APPV'D. BY: CGW	APPV'D. BY:
DATE: 8/21/14	DATE: 9/3/14	DATE: 9/5/14	DATE:

CHANGE LETTER	REVISION DESCRIPTION	DWN. BY:	CHK'D. BY:	APPV'D. BY:	APPV'D. BY:	DATE
B	REVISED REAR LOUVER BLADES	NMM	RKP	CGW		5/21/15
A	ADDED FLAT STRAP WELD CALL OUT	JDL	RKP	CGW		1/6/15

RUSKIN Air & Sound Control
3900 DR. GREAVES RD
GRANDVIEW, MO 64030

PLOT SCALE: NONE
ECN:

TITLE: HZ850 LOUVER WOOD SUBSTRATE CONNECTION DETAILS

DWG. NO. 60-022354-00B

SHEET 5 OF 21

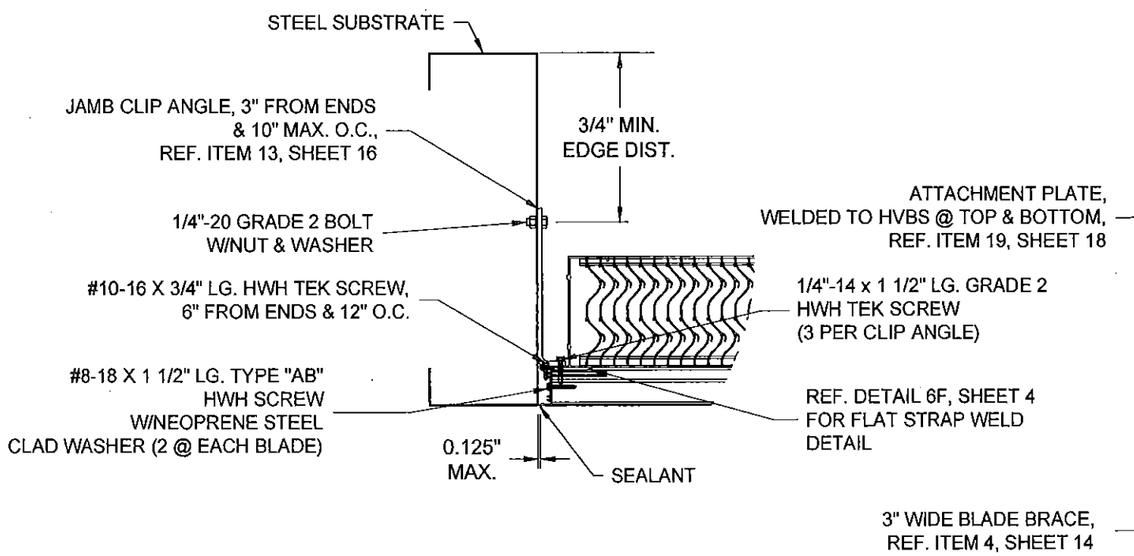

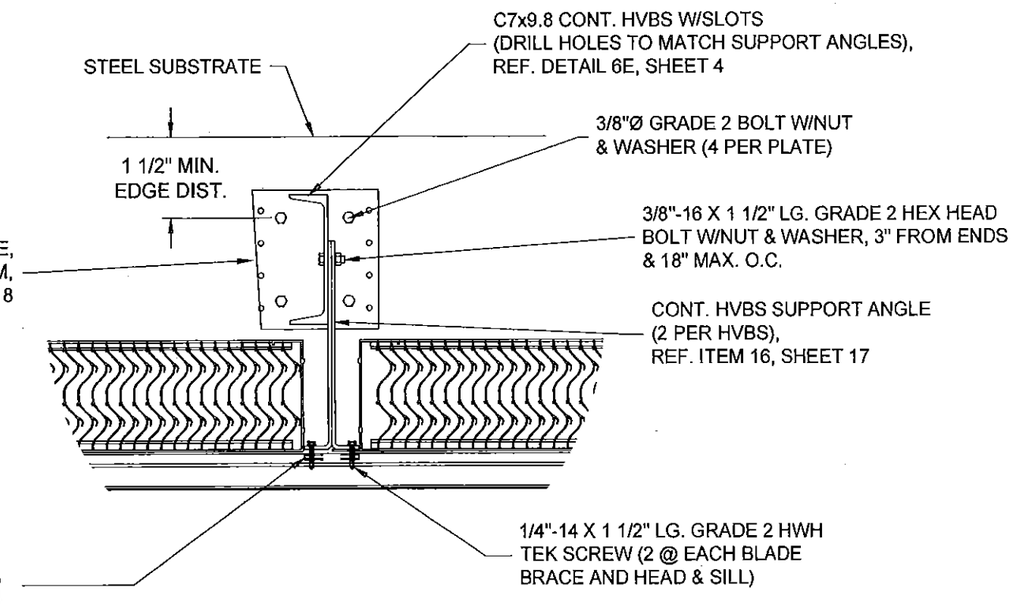

B 5A - CONNECTION DETAIL @ JAMB HZ850

N.T.S.
STEEL SUBSTRATE (16 GA. MIN. THICKNESS)
BOLT ATTACHMENT OPTION

B 6A - CONNECTION DETAIL @ HEAD/SILL HZ850

N.T.S.
STEEL SUBSTRATE (10 GA. MIN. THICKNESS)
BOLT ATTACHMENT OPTION

* FOR SMALLER ASSEMBLIES, REFER TO SUPPORT TABLE ON SHEET 20.

Approved as complying with the Florida Building Code
Date 8/11/2015
NOA# 14-0918.06
Miami Dade Product Control
By

FOR OFFICE USE ONLY

ENGINEER OF RECORD SEAL

CHELSEA G. WELCH LICENSE No 67221 STATE OF FLORIDA PROFESSIONAL ENGINEER

TOLERANCES
DECIMAL DIMENSIONS:
3 PLACE .XXX +.010
2 PLACE .XX +.020
FRACTION DIMENSIONS: +1/16
ANGLE DIMENSIONS +2°
USE WIQ-007 & 008
UNLESS SPECIFIED OTHERWISE

B	REVISED REAR LOUVER BLADES	NMM	RKP	CGW		5/21/15
A	NO CHANGES ON THIS SHEET	JDL	RKP	CGW		1/6/15
CHANGE LETTER	REVISION DESCRIPTION	DWN. BY:	CHK'D. BY:	APPV'D. BY:	APPV'D. BY:	DATE

ENGINEER OF RECORD: CHELSEA G. WELCH
ENGINEERING DISCIPLINE: CIVIL/STRUCTURAL ENGINEERING
REGISTRATION NUMBER: FL# 67221

DWN. BY:	CHK. BY:	APPV'D. BY:	APPV'D. BY:
JDL	RKP	CGW	
DATE: 8/21/14	DATE: 9/3/14	DATE: 9/5/14	DATE:

RUSKIN Air & Sound Control
3900 DR. GREAVES RD
GRANDVIEW, MO 64030

PLOT SCALE: NONE
ECN:

TITLE: HZ850 LOUVER STEEL SUBSTRATE CONNECTION DETAILS

DWG. NO. 60-022354-00B

SHEET 6 OF 21

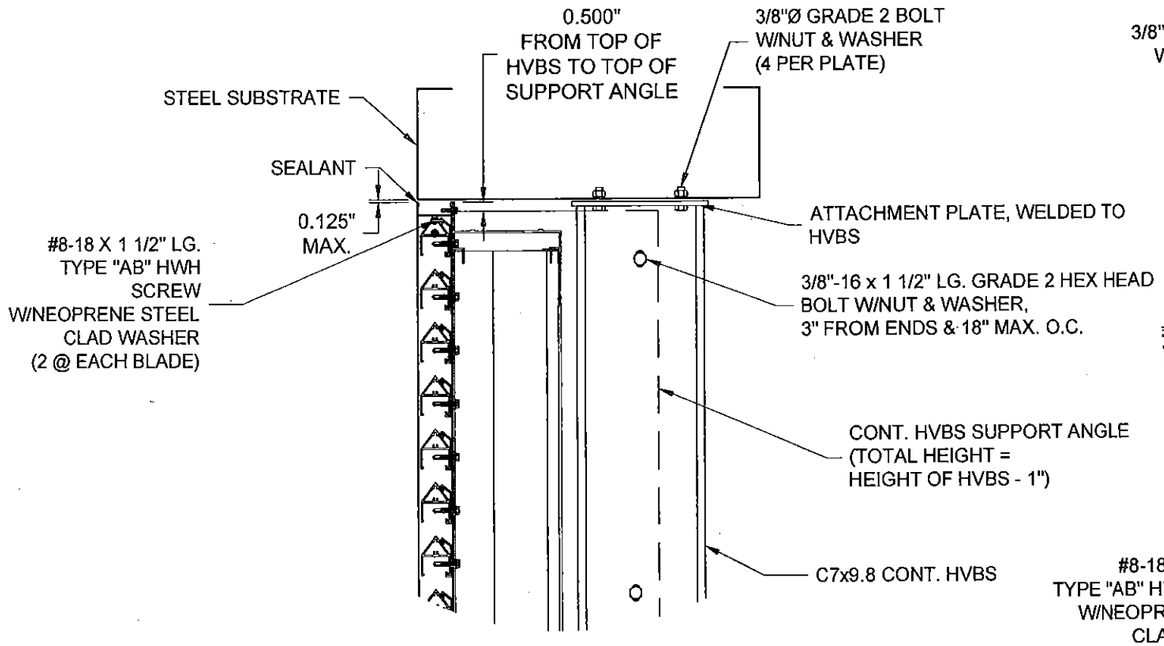

7A — CONNECTION DETAIL @ HEAD — HZ850

N.T.S.
STEEL SUBSTRATE (10 GA. MIN. THICKNESS)
BOLT ATTACHMENT OPTION
(SILL SIMILAR)

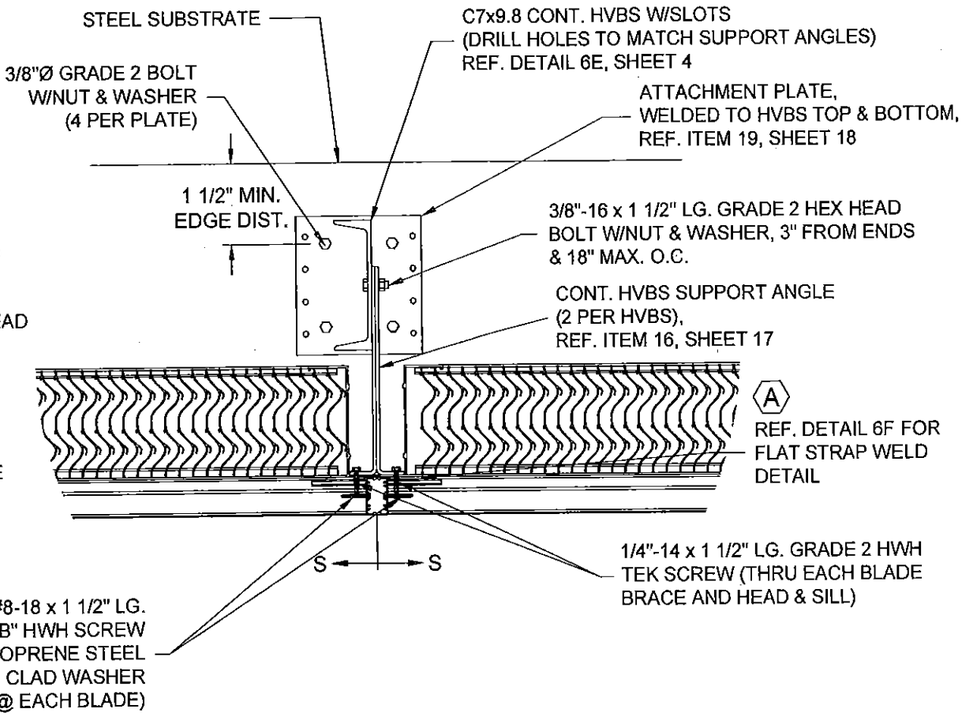

B 8A — CONNECTION DETAIL @ HEAD/SILL (MULLION) — HZ850

N.T.S.
STEEL SUBSTRATE (10 GA. MIN. THICKNESS)
BOLT ATTACHMENT OPTION

* FOR SMALLER ASSEMBLIES, REFER TO SUPPORT TABLE ON SHEET 20.

CHANGE LETTER	REVISION DESCRIPTION	DWN. BY:	CHK'D. BY:	APPV'D. BY:	APPV'D. BY:	DATE
B	REVISED REAR LOUVER BLADES	NMM	RKP	CGW		5/21/15
A	ADDED FLAT STRAP WELD CALL OUT	JDL	RKP	CGW		1/6/15

Approved as complying with the Florida Building Code
Date 07/16/2015
NOA# 14-0918.06
Miami Dade Product Control
By

FOR OFFICE USE ONLY

ENGINEER OF RECORD SEAL

CHELSEA G. WELCH
LICENSE
No 67221
STATE OF
FLORIDA
PROFESSIONAL ENGINEER

TOLERANCES:
DECIMAL DIMENSIONS:
3 PLACE .XXX +.010
2 PLACE .XX +.020
FRACTION DIMENSIONS: ± 1/16
ANGLE DIMENSIONS ± 2°
USE WIQ-007 & 008
UNLESS SPECIFIED OTHERWISE

ENGINEER OF RECORD	CHELSEA G. WELCH
ENGINEERING DISCIPLINE	CIVIL/STRUCTURAL ENGINEERING
REGISTRATION NUMBER	FL# 67221

DWN. BY:	CHK. BY:	APPV'D. BY:	APPV'D. BY:
JDL	RKP	CGW	
DATE: 8/21/14	DATE: 9/3/14	DATE: 9/5/14	DATE:

RUSKIN
Air & Sound Control
3900 DR. GREAVES RD
GRANDVIEW, MO 64030

PLOT SCALE: NONE
ECN:

TITLE
HZ850 LOUVER
STEEL SUBSTRATE
CONNECTION DETAILS

DWG. NO.
60-022354-00B

SHEET 7 OF 21

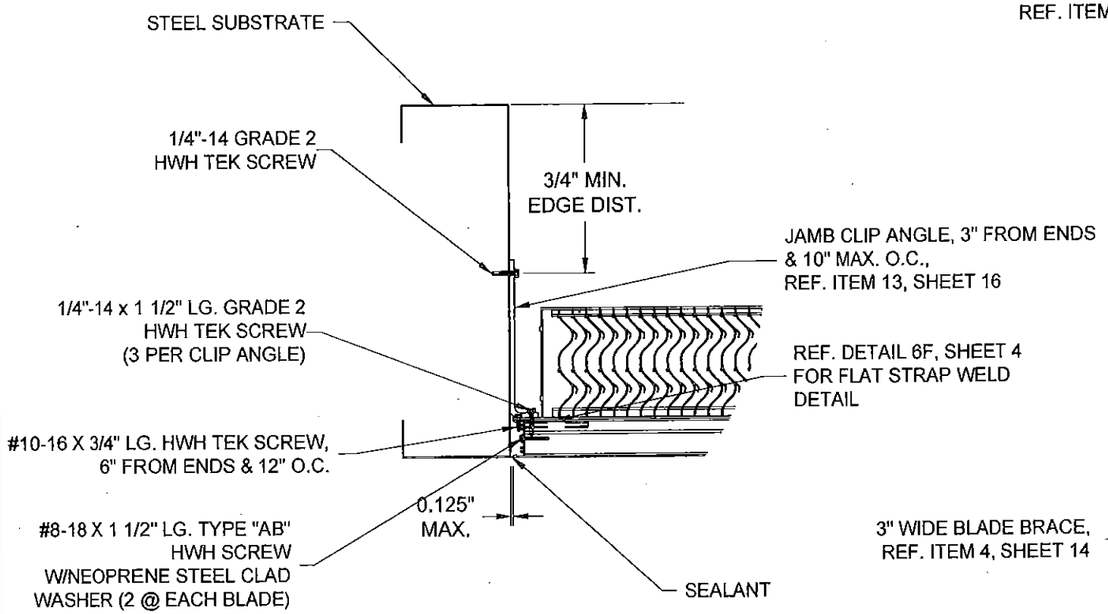

B 5B - CONNECTION DETAIL @ JAMB HZ850

N.T.S.
STEEL SUBSCTRATE (16 GA. MIN. THICKNESS)
SCREW ATTACHMENT OPTION

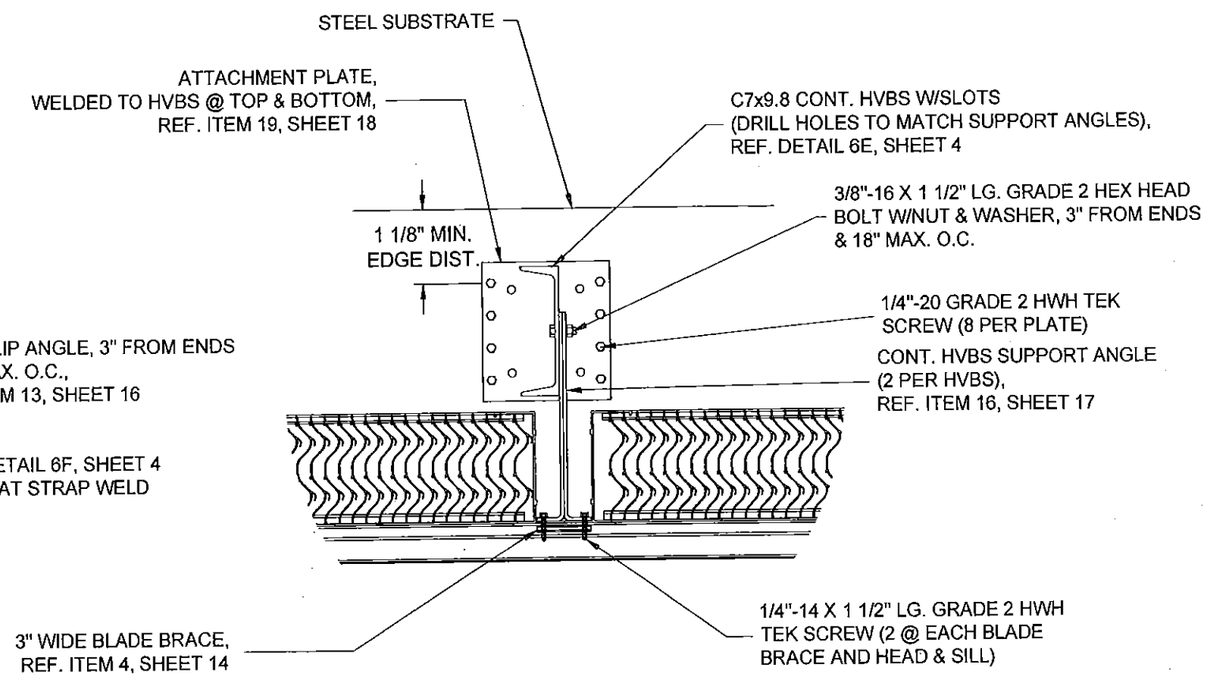

B 6B - CONNECTION DETAIL @ HEAD/SILL HZ850

N.T.S.
STEEL SUBSTRATE (10 GA. MIN. THICKNESS)
SCREW ATTACHMENT OPTION

* FOR SMALLER ASSEMBLIES, REFER TO SUPPORT TABLE ON SHEET 20.

CHANGE LETTER	REVISION DESCRIPTION	DWN. BY:	CHK'D. BY:	APPV'D. BY:	APPV'D. BY:	DATE
B	REVISED REAR LOUVER BLADES	NMM	RKP	CGW		5/21/15
A	NO CHANGES ON THIS SHEET	JDL	RKP	CGW		1/6/15

Approved as complying with the Florida Building Code
Date 09/16/2015
NOA# 14-0918.06
Miami Dade Product Control
By

FOR OFFICE USE ONLY

ENGINEER OF RECORD SEAL

CHELSEA G. WELCH LICENSE No 67221 STATE OF FLORIDA PROFESSIONAL ENGINEER
9/25/2015

TOLERANCES:
DECIMAL DIMENSIONS:
3 PLACE .XXX +.010
2 PLACE .XX +.020
FRACTION DIMENSIONS: + 1/16
ANGLE DIMENSIONS + 2°
USE VIQ-007 & 008
UNLESS SPECIFIED OTHERWISE

ENGINEER OF RECORD
CHELSEA G. WELCH

ENGINEERING DISCIPLINE
CIVIL/STRUCTURAL ENGINEERING

REGISTRATION NUMBER
FL# 67221

DWN. BY:	CHK. BY:	APPV'D. BY:	APPV'D. BY:
JDL	RKP	CGW	
DATE: 8/21/14	DATE: 9/3/14	DATE: 9/5/14	DATE:

RUSKIN Air & Sound Control
3900 DR. GREAVES RD
GRANDVIEW, MO 64030

PLOT SCALE
NONE

ECN: _____

TITLE
HZ850 LOUVER
STEEL SUBSTRATE
CONNECTION DETAILS

DWG. NO.
60-022354-00B

SHEET 8 OF 21

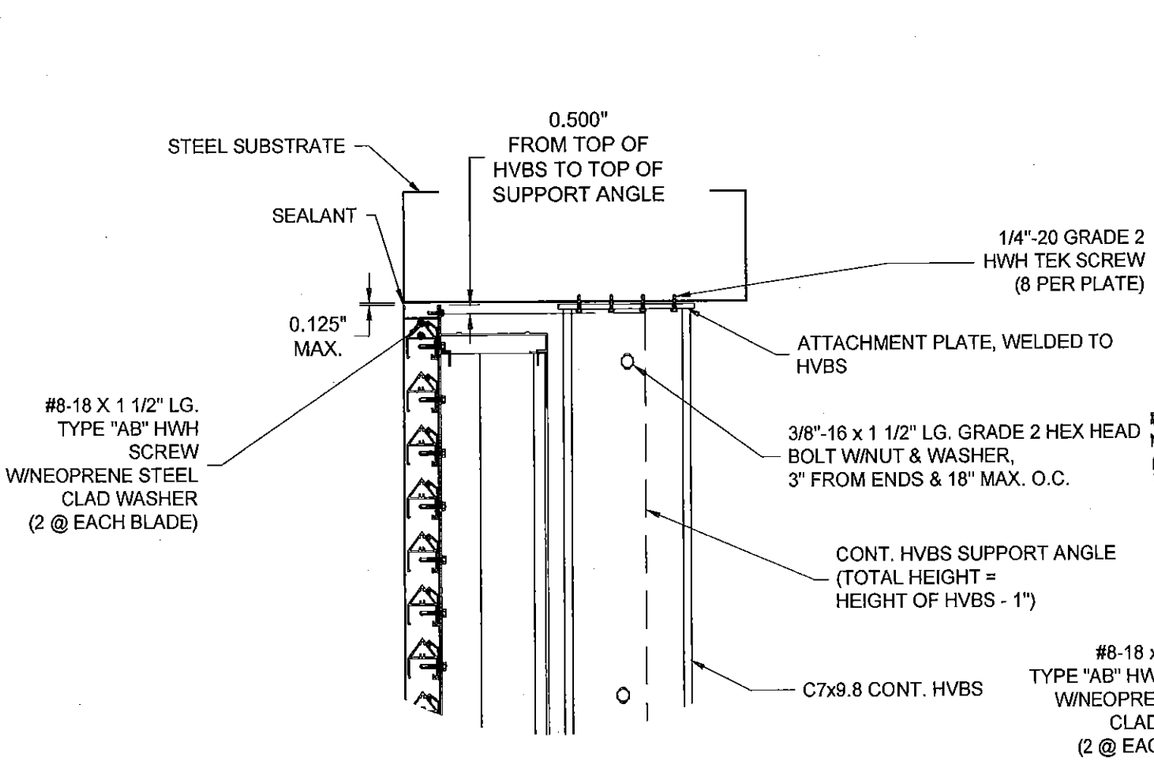

7B - CONNECTION DETAIL @ HEAD HZ850

N.T.S.
STEEL SUBSTRATE (10 GA. MIN. THICKNESS)
SCREW ATTACHMENT OPTION

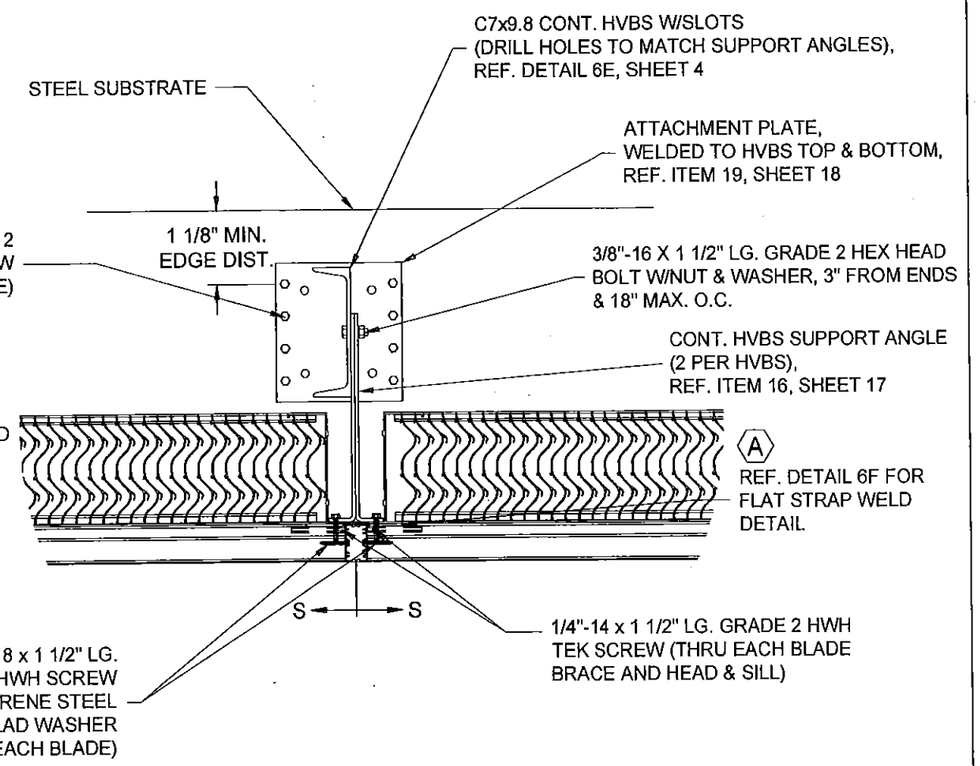

B 8B - CONNECTION DETAIL @ HEAD/SILL (MULLION) HZ850

N.T.S.
STEEL SUBSTRATE (10 GA. MIN. THICKNESS)
SCREW ATTACHMENT OPTION

* FOR SMALLER ASSEMBLIES, REFER TO SUPPORT TABLE ON SHEET 20.

Approved as complying with the Florida Building Code.
Date 07/16/2015
NOA# 14-0918.06
Miami Dade Product Control
By

FOR OFFICE USE ONLY

ENGINEER OF RECORD SEAL

CHELSEA G. WELCH LICENSE No 67221 STATE OF FLORIDA PROFESSIONAL ENGINEER
7/16/2015

TOLERANCES
DECIMAL DIMENSIONS:
3 PLACE .XXX ± .010
2 PLACE .XX ± .020
FRACTION DIMENSIONS: ± 1/16
ANGLE DIMENSIONS ± 2°
USE WIQ-007 & 008
UNLESS SPECIFIED OTHERWISE

ENGINEER OF RECORD	CHELSEA G. WELCH
ENGINEERING DISCIPLINE	CIVIL/STRUCTURAL ENGINEERING
REGISTRATION NUMBER	FL# 67221

DWN. BY:	CHK. BY:	APPV'D. BY:	APPV'D. BY:
JDL	RKP	CGW	
DATE: 8/21/14	DATE: 9/3/14	DATE: 9/5/14	DATE:

CHANGE LETTER	REVISION DESCRIPTION	DWN. BY:	CHK'D. BY:	APPV'D. BY:	APPV'D. BY:	DATE
B	REVISED REAR LOUVER BLADES	NMM	RKP	CGW		5/21/15
A	ADDED FLAT STRAP WELD CALL OUT	JDL	RKP	CGW		1/6/15

RUSKIN Air & Sound Control
3900 DR. GREAVES RD
GRANDVIEW, MO 64030

PLOT SCALE: NONE
ECN:

TITLE
HZ850 LOUVER
STEEL SUBSTRATE
CONNECTION DETAILS

DWG. NO.
60-022354-00B

SHEET 9 OF 21

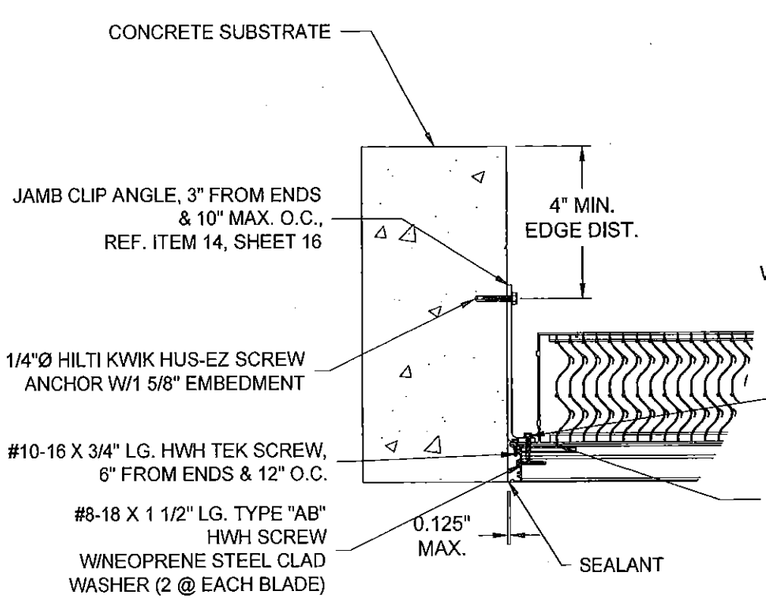

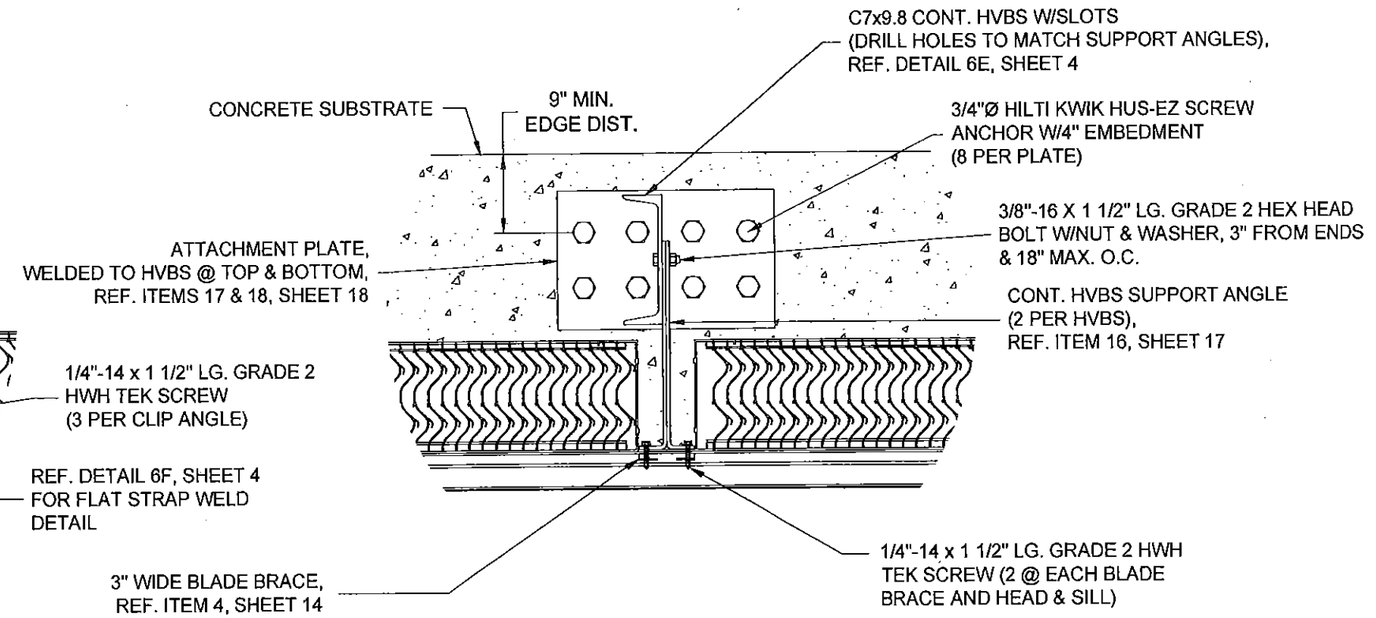

B 5C - CONNECTION DETAIL @ JAMB HZ850

N.T.S.
CONCRETE SUBSTRATE
(4" MIN. THICKNESS, MIN. f'c = 3000 PSI)

B 6C - CONNECTION DETAIL @ HEAD/SILL HZ850

N.T.S.
CONCRETE SUBSTRATE
(6" MIN. THICKNESS, MIN. f'c = 3000 PSI)

* FOR SMALLER ASSEMBLIES, REFER TO SUPPORT TABLE ON SHEET 20.

Approved as complying with the Florida Building Code
Date 07/16/2015
NOA# 14-0918.06
Miami Dade Product Control
By

FOR OFFICE USE ONLY

ENGINEER OF RECORD SEAL

CHELSEA G. WELCH LICENSE No 67221 STATE OF FLORIDA PROFESSIONAL ENGINEER
5/12/15

TOLERANCES
DECIMAL DIMENSIONS:
3 PLACE .XXX ± .010
2 PLACE .XX ± .021
FRACTION DIMENSIONS: ± 1/16
ANGLE DIMENSIONS ± 2°
USE WIQ-007 & 008
UNLESS SPECIFIED OTHERWISE

ENGINEER OF RECORD	CHELSEA G. WELCH
ENGINEERING DISCIPLINE	CIVIL/STRUCTURAL ENGINEERING
REGISTRATION NUMBER	FL# 67221

DWN. BY:	CHK. BY:	APPV'D. BY:	APPV'D. BY:
JDL	RKP	CGW	
DATE: 8/21/14	DATE: 9/3/14	DATE: 9/5/14	DATE:

CHANGE LETTER	REVISION DESCRIPTION	DWN. BY:	CHK'D. BY:	APPV'D. BY:	APPV'D. BY:	DATE
B	REVISED REAR LOUVER BLADES	NMM	RKP	CGW		5/21/15
A	NO CHANGES ON THIS SHEET	JDL	RKP	CGW		1/6/15

RUSKIN Air & Sound Control
3900 DR. GREAVES RD
GRANDVIEW, MO 64030

PLOT SCALE: NONE
ECN:

TITLE: HZ850 LOUVER CONCRETE SUBSTRATE CONNECTION DETAILS

DWG. NO. 60-022354-00B

SHEET 10 OF 21

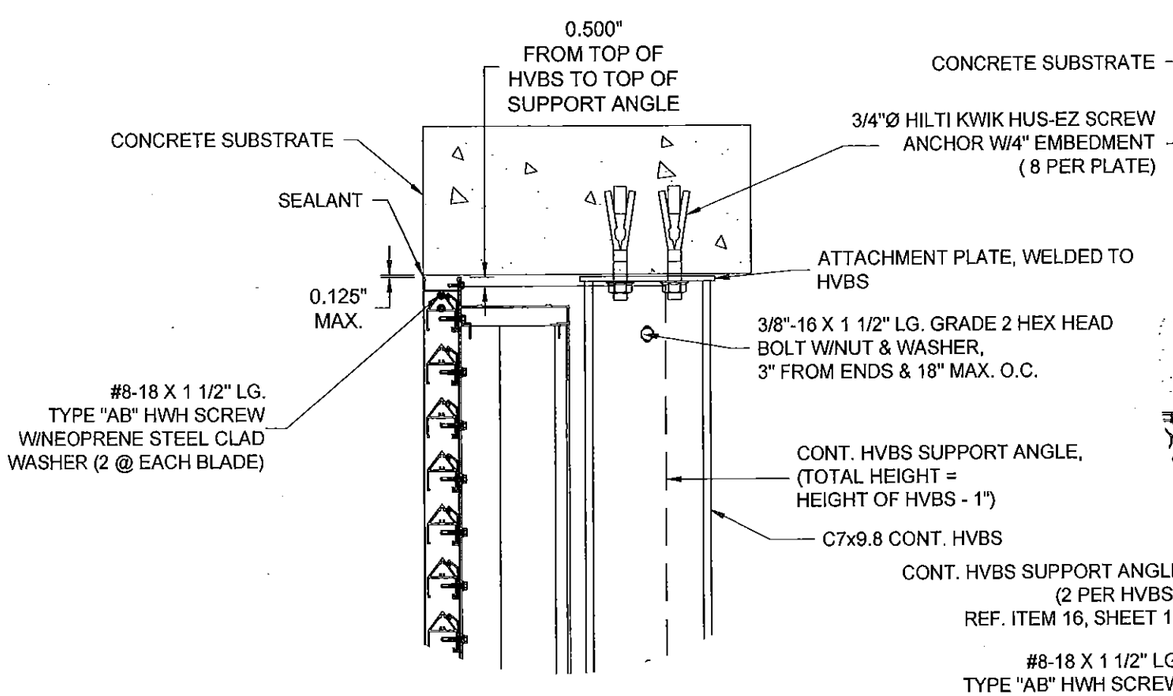

7C — CONNECTION DETAIL @ HEAD — HZ850

N.T.S.
CONCRETE SUBSTRATE
(6" MIN. THICKNESS, MIN. f'c = 3000 PSI)
SILL SIMILAR

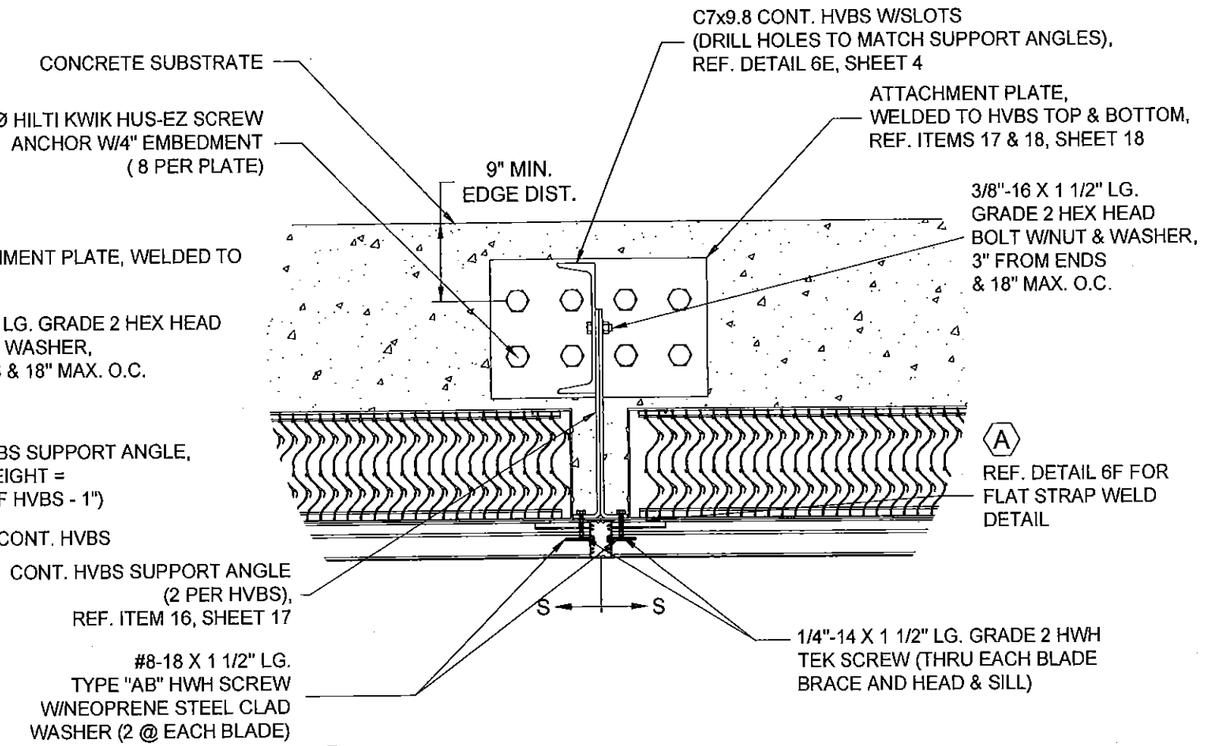

B 8C — CONNECTION DETAIL @ HEAD/SILL (MULLION) — HZ850

N.T.S.
CONCRETE SUBSTRATE
(6" MIN. THICKNESS, MIN. f'c = 3000 PSI)

* FOR SMALLER ASSEMBLIES, REFER TO SUPPORT TABLE ON SHEET 20.

CHANGE LETTER	REVISION DESCRIPTION	DWN. BY:	CHK'D. BY:	APPV'D. BY:	APPV'D. BY:	DATE
B	REVISED REAR LOUVER BLADES	NMM	RKP	CGW		5/21/15
A	ADDED FLAT STRAP WELD CALL OUT	JDL	RKP	CGW		1/6/15

Approved as complying with the Florida Building Code
Date 07/16/2015
NOA# 14-0918.06
Miami Dade Product Control
By

FOR OFFICE USE ONLY

ENGINEER OF RECORD SEAL

CHELSEA G. WELCH
LICENSE
No 67221
STATE OF
FLORIDA
PROFESSIONAL ENGINEER
7/16/2015

TOLERANCES
DECIMAL DIMENSIONS:
3 PLACE .XXX +.010
2 PLACE .XX +.020
FRACTION DIMENSIONS: + 1/16
ANGLE DIMENSIONS + 2°
USE WQ-007 & 008
UNLESS SPECIFIED OTHERWISE

ENGINEER OF RECORD: CHELSEA G. WELCH
ENGINEERING DISCIPLINE: CIVIL/STRUCTURAL ENGINEERING
REGISTRATION NUMBER: FL# 67221

DWN. BY:	CHK. BY:	APPV'D. BY:	APPV'D. BY:
JDL	RKP	CGW	
DATE: 8/21/14	DATE: 9/3/14	DATE: 9/5/14	DATE:

RUSKIN Air & Sound Control
3900 DR. GREAVES RD
GRANDVIEW, MO 64030

PLOT SCALE: NONE
ECN:

TITLE: HZ850 LOUVER CONCRETE SUBSTRATE CONNECTION DETAILS

DWG. NO. 60-022354-00B

SHEET 11 OF 21

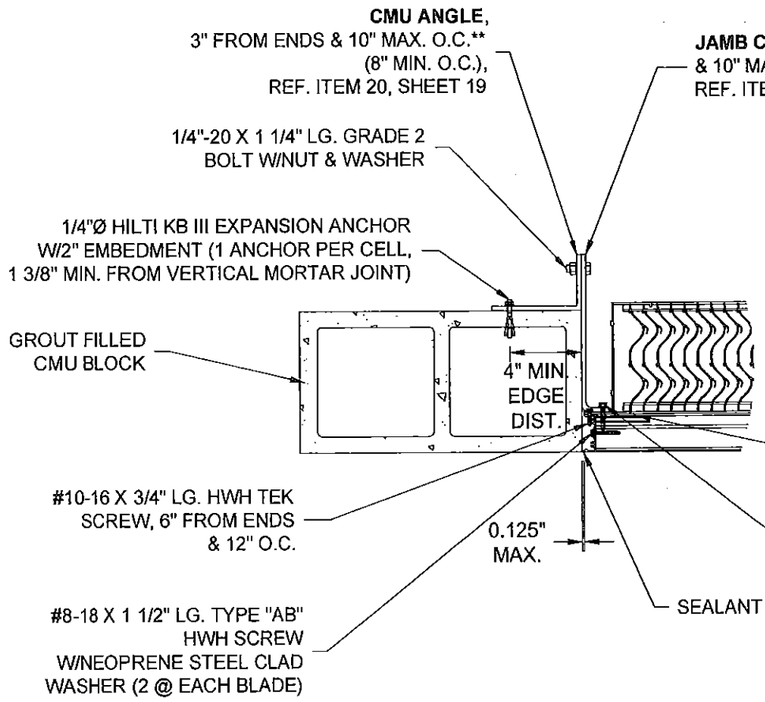

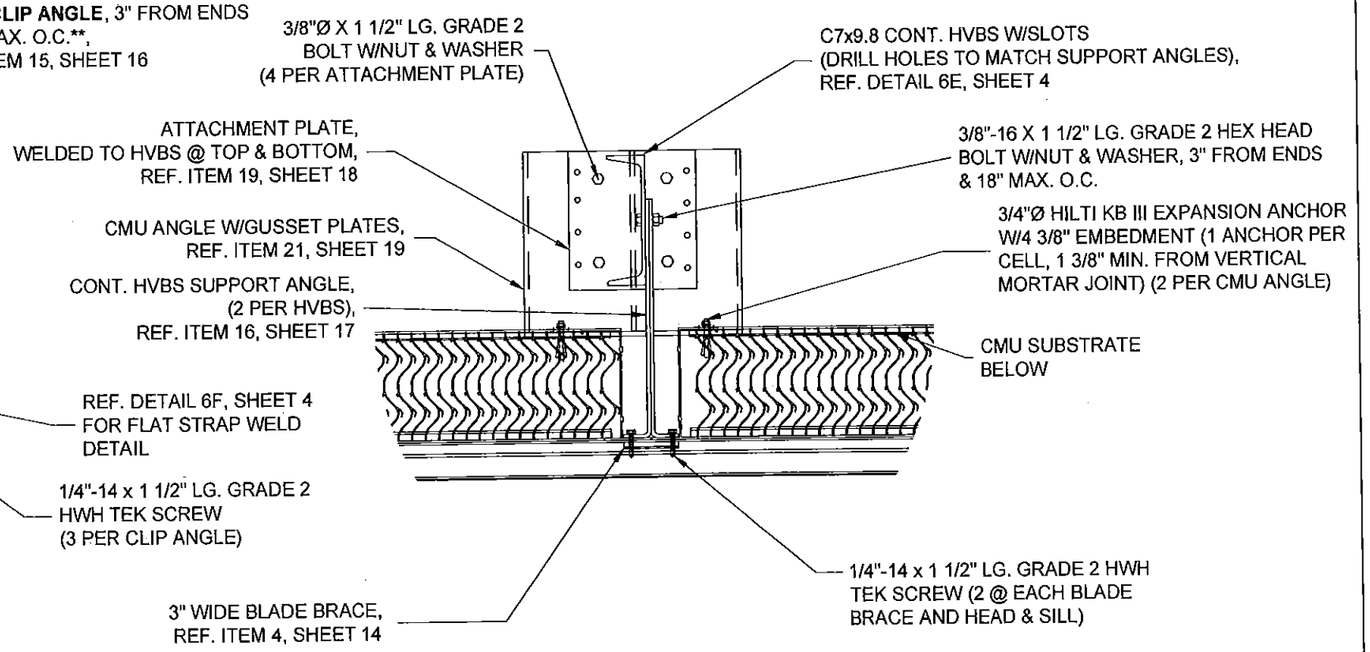

B 5D — CONNECTION DETAIL @ JAMB HZ850

N.T.S.
6", 8", 10", 12" CMU SUBSTRATE, REFER TO NOTE 9
MIN. LOUVER HEIGHT = 22"
**THE ANGLES SHALL BE LOCATED 3" FROM ENDS & 12" MAX. O.C. FOR LOUVER HEIGHTS LESS THAN 38".

B 6D — CONNECTION DETAIL @ HEAD/SILL HZ850

N.T.S.
6", 8", 10", 12" CMU SUBSTRATE, REFER TO NOTE 9

* FOR SMALLER ASSEMBLIES, REFER TO SUPPORT TABLE ON SHEET 20.

Approved as complying with the Florida Building Code
Date 07/16/2015
NOA# 14-0918.06
Miami Dade Product Control
By

FOR OFFICE USE ONLY

ENGINEER OF RECORD SEAL

CHELSEA G. WELCH LICENSE No 67221 STATE OF FLORIDA PROFESSIONAL ENGINEER 7/26/2015

TOLERANCES UNLESS SPECIFIED OTHERWISE: DECIMAL DIMENSIONS: 2 PLACE: .XX = .010, 3 PLACE: .XXX = .002; FRACTION DIMENSIONS = 1/16; ANGLE DIMENSIONS = 2°; USE WI-007 & 008

ENGINEER OF RECORD: CHELSEA G. WELCH
ENGINEERING DISCIPLINE: CIVIL/STRUCTURAL ENGINEERING
REGISTRATION NUMBER: FL# 67221

DWN. BY:	CHK. BY:	APPV'D. BY:	APPV'D. BY:
JDL	RKP	CGW	
DATE: 8/21/14	DATE: 9/3/14	DATE: 9/5/14	DATE:

CHANGE LETTER	REVISION DESCRIPTION	DWN. BY:	CHK'D. BY:	APPV'D. BY:	APPV'D. BY:	DATE
B	REVISED REAR LOUVER BLADES	NMM	RKP	CGW		5/21/15
A	NO CHANGES ON THIS SHEET	JDL	RKP	CGW		1/6/15

RUSKIN Air & Sound Control — 3900 DR. GREAVES RD GRANDVIEW, MO 64030

PLOT SCALE: NONE
ECN:

TITLE: HZ850 LOUVER CMU SUBSTRATE CONNECTION DETAILS

DWG. NO. 60-022354-00B

SHEET 12 OF 21

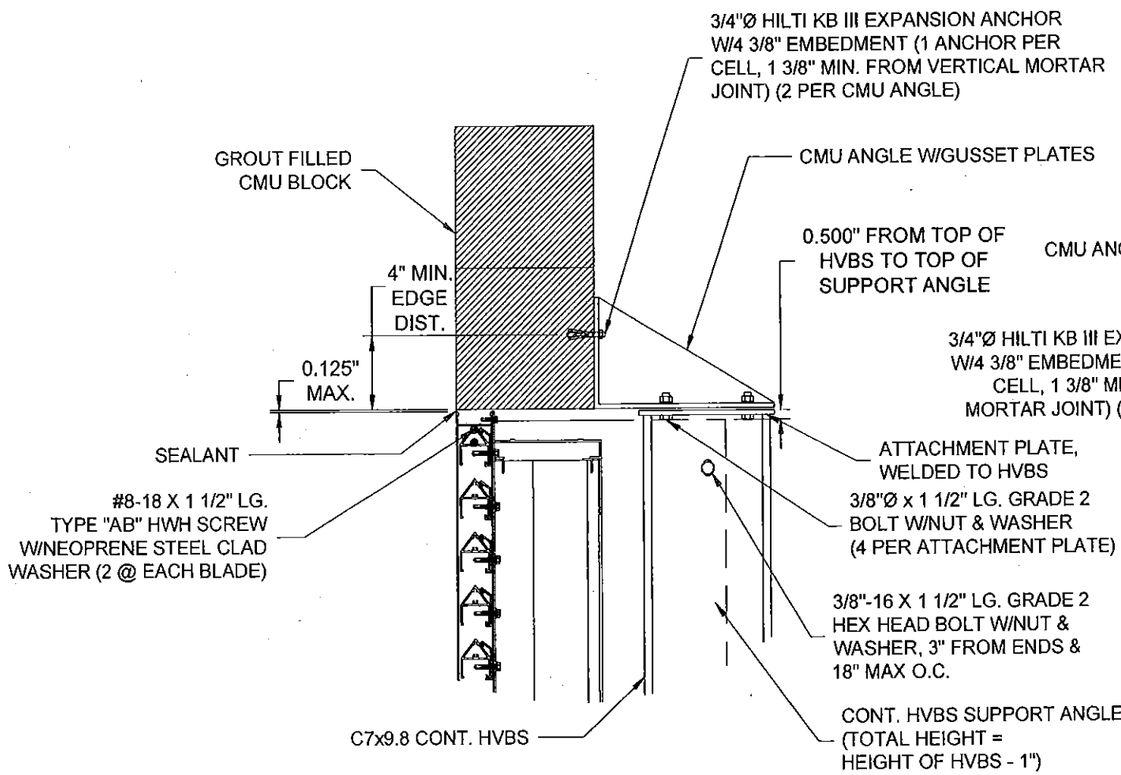

7D - CONNECTION DETAIL @ HEAD HZ850

N.T.S.
6", 8", 10", 12" CMU SUBSTRATE, REFER TO NOTE 9
(SILL SIMILAR)

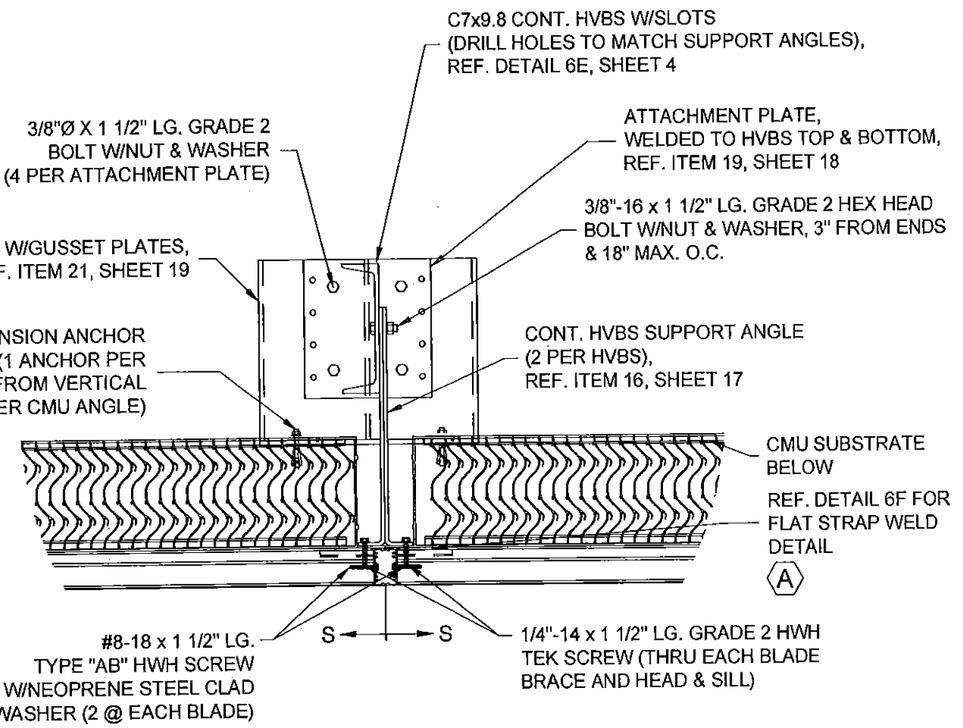

B 8D - CONNECTION DETAIL @ HEAD/SILL (MULLION) HZ850

N.T.S.
6", 8", 10", 12" CMU SUBSTRATE, REFER TO NOTE 9

* FOR SMALLER ASSEMBLIES, REFER TO SUPPORT TABLE ON SHEET 20.

CHANGE LETTER	REVISION DESCRIPTION	DWN. BY:	CHK'D. BY:	APPV'D. BY:	APPV'D. BY:	DATE
B	REVISED REAR LOUVER BLADES	NMM	RKP	CGW		5/21/15
A	ADDED FLAT STRAP WELD CALL OUT	JDL	RKP	CGW		1/6/15

Approved as complying with the Florida Building Code
Date 07/16/2015
NOA# 14-0918.06
Miami Dade Product Control
By

FOR OFFICE USE ONLY

ENGINEER OF RECORD SEAL

CHELSEA G. WELCH LICENSE No 67221 STATE OF FLORIDA PROFESSIONAL ENGINEER
7/26/2015

TOLERANCES
DECIMAL DIMENSIONS:
3 PLACE .XXX ± .010
2 PLACE .XX ± .020
FRACTION DIMENSIONS: ± 1/16
ANGLE DIMENSIONS ± 2°
USE VIQ-007 & 008
UNLESS SPECIFIED OTHERWISE

ENGINEER OF RECORD	CHELSEA G. WELCH			
ENGINEERING DISCIPLINE	CIVIL/STRUCTURAL ENGINEERING			
REGISTRATION NUMBER	FL# 67221			
DWN. BY: JDL	CHK. BY: RKP	APPV'D. BY: CGW	APPV'D. BY:	
DATE: 8/21/14	DATE: 9/3/14	DATE: 9/5/14	DATE:	

RUSKIN Air & Sound Control
3900 DR. GREAVES RD
GRANDVIEW, MO 64030

PLOT SCALE: NONE
ECN:

TITLE: HZ850 LOUVER CMU SUBSTRATE CONNECTION DETAILS

DWG. NO. 60-022354-00B

SHEET 13 OF 21

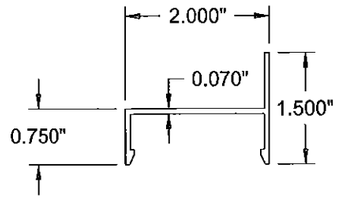

ITEM 1 - FRONT LOUVER HEAD / SILL FRAME

N.T.S. ELF211
MATERIAL: 6063-T6 EXTRUDED ALUM.
RUSKIN # 70-021104-00B

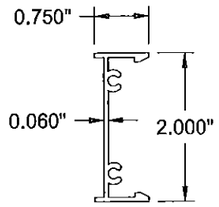

ITEM 2 - FRONT LOUVER JAMB FRAME

N.T.S. ELF211
MATERIAL: 6063-T6 EXTRUDED ALUM.
RUSKIN # 70-011286-00B

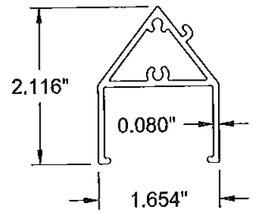

ITEM 3 - FRONT LOUVER BLADE

N.T.S. HZ850
MATERIAL: 6063-T6 EXTRUDED ALUM.
RUSKIN # 70-022854-00B

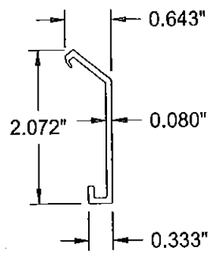

ITEM 4 - FRONT LOUVER BLADE BRACE

N.T.S. HZ850
MATERIAL: 6063-T6 EXTRUDED ALUM.
RUSKIN # 70-022855-00B

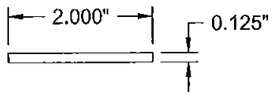

ITEM 5 - FRONT LOUVER FLAT STRAP

N.T.S. HZ850
MATERIAL: 6063-T5 EXTRUDED ALUM.
RUSKIN # 85-021658-00B

Approved as complying with the Florida Building Code.
Date 07/16/2015
NOA# 14-0918.06
Miami Dade Product Control
By

FOR OFFICE USE ONLY

ENGINEER OF RECORD SEAL

CHELSEA G. WELCH
LICENSE
No 67221
STATE OF FLORIDA
PROFESSIONAL ENGINEER
7/16/2015

TOLERANCES
DECIMAL DIMENSIONS:
3 PLACE .XXX ± 010
2 PLACE .XX ± 020
FRACTION DIMENSIONS: ± 1/16
ANGLE DIMENSIONS ± 2°
USE WQ-007 & 008
UNLESS SPECIFIED OTHERWISE

ENGINEER OF RECORD	CHELSEA G. WELCH			
ENGINEERING DISCIPLINE	CIVIL/STRUCTURAL ENGINEERING			
REGISTRATION NUMBER	FL# 67221			
DWN. BY: JDL	CHK. BY: RKP	APPV'D. BY: CGW	APPV'D. BY:	
DATE: 8/21/14	DATE: 9/3/14	DATE: 9/5/14	DATE:	

CHANGE LETTER	REVISION DESCRIPTION	DWN. BY:	CHK'D. BY:	APPV'D. BY:	APPV'D. BY:	DATE
B	NO CHANGES ON THIS SHEET	NMM	RKP	CGW		5/21/15
A	NO CHANGES ON THIS SHEET	JDL	RKP	CGW		1/6/15

RUSKIN Air & Sound Control
3900 DR. GREAVES RD
GRANDVIEW, MO 64030

PLOT SCALE: NONE
ECN: _____

TITLE: HZ850 LOUVER PART DETAILS

DWG. NO. 60-022354-00B

SHEET 14 OF 21

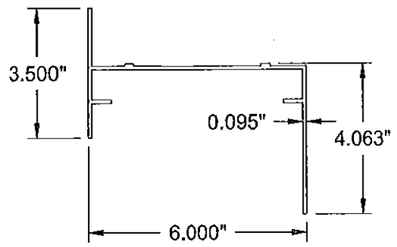

ITEM 6 - REAR LOUVER HEAD FRAME

N.T.S. EME6325D
MATERIAL: 6063-T6 EXTRUDED ALUM.
RUSKIN # 70-022529-00B

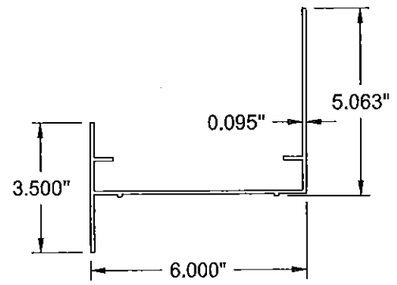

ITEM 7 - REAR LOUVER SILL FRAME

N.T.S. EME6325D
MATERIAL: 6063-T6 EXTRUDED ALUM.
RUSKIN # 70-022722-00B

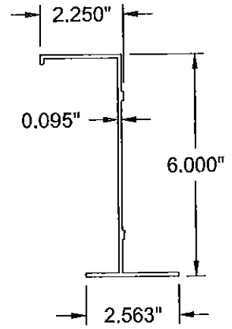

ITEM 8 - REAR LOUVER JAMB FRAME

N.T.S. EME6325D
MATERIAL: 6063-T6 EXTRUDED ALUM.
RUSKIN # 70-022530-00B

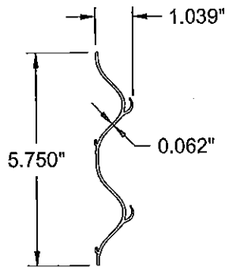

(B) ITEM 9 - REAR LOUVER BLADE

N.T.S. EME6325D
MATERIAL: 6063-T6 EXTRUDED ALUM.
RUSKIN # 70-021868-00B

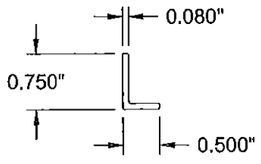

ITEM 10 - REAR LOUVER BLADE END ANGLE

N.T.S. EME6325D
MATERIAL: 6063-T5 EXTRUDED ALUM.
RUSKIN # RSM7002

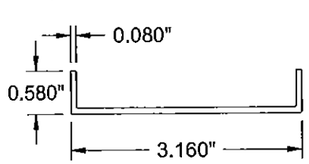

ITEM 11 - REAR LOUVER HORIZONTAL BLADE SUPPORT

N.T.S. EME6325D
MATERIAL: 6063-T5 EXTRUDED ALUM.
RUSKIN # RSM7001

Approved as complying with the Florida Building Code
Date 07/16/2015
NOA# 14-0918.06
Miami Dade Product Control
By

FOR OFFICE USE ONLY

ENGINEER OF RECORD SEAL

CHELSEA G. WELCH LICENSE No 67221 STATE OF FLORIDA PROFESSIONAL ENGINEER
5/26/2015

TOLERANCES:
DECIMAL DIMENSIONS:
2 PLACE - .XX +.010
3 PLACE - .XXX +.005
FRACTION DIMENSIONS: +1/16
ANGLE DIMENSIONS +2°
USE VIO-007 & 008
UNLESS SPECIFIED OTHERWISE

ENGINEER OF RECORD: CHELSEA G. WELCH
ENGINEERING DISCIPLINE: CIVIL/STRUCTURAL ENGINEERING
REGISTRATION NUMBER: FL# 67221

DWN. BY:	CHK. BY:	APPV'D. BY:	APPV'D. BY:
JDL	RKP	CGW	
DATE: 8/21/14	DATE: 9/3/14	DATE: 9/5/14	DATE:

CHANGE LETTER	REVISION DESCRIPTION	DWN. BY.	CHK'D. BY.	APPV'D BY:	APPV'D. BY:	DATE
B	REVISED ITEM 9	NMM	RKP	CGW		5/21/15
A	NO CHANGES ON THIS SHEET	JDL	RKP	CGW		1/6/15

RUSKIN Air & Sound Control
3900 DR. GREAVES RD
GRANDVIEW, MO 64030

PLOT SCALE: NONE
ECN:

TITLE: HZ850 LOUVER PART DETAILS

DWG. NO: 60-022354-00B

SHEET 15 OF 21

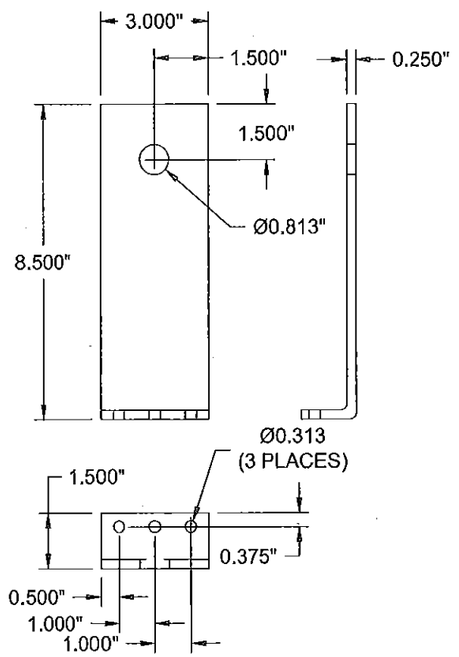

ITEM 12- JAMB CLIP ANGLE

N.T.S. HZ850
MATERIAL: 5005-H34 FORMED ALUM.
WOOD SUBSTRATE

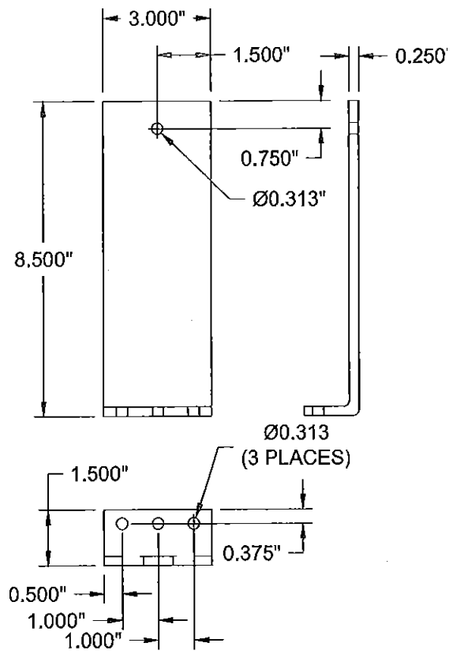

ITEM 13- JAMB CLIP ANGLE

N.T.S. HZ850
MATERIAL: 5005-H34 FORMED ALUM.
STEEL SUBSTRATE

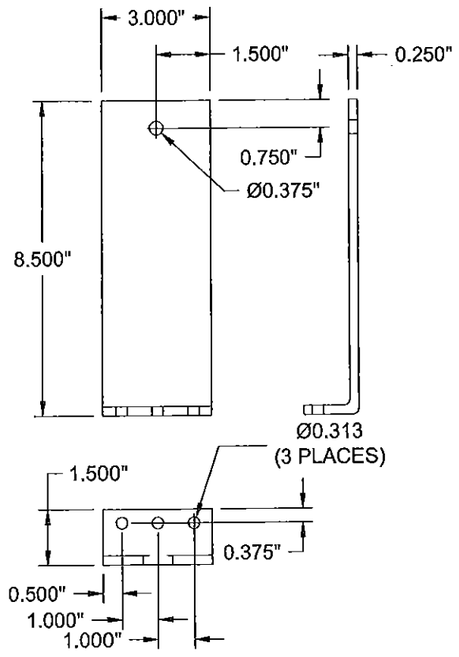

ITEM 14 - JAMB CLIP ANGLE

N.T.S. HZ850
MATERIAL: 5005-H34 FORMED ALUM.
CONCRETE SUBSTRATE

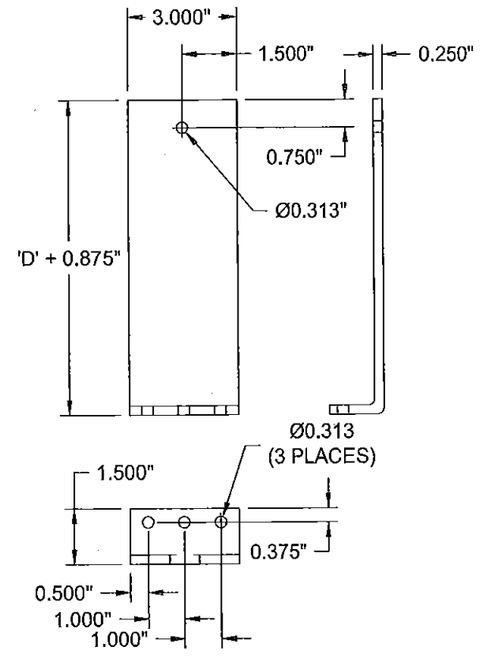

ITEM 15 - JAMB CLIP ANGLE

N.T.S. HZ850
MATERIAL: 5005-H34 FORMED ALUM.
CMU SUBSTRATE
'D' = WALL DEPTH

Approved as complying with the Florida Building Code.
Date 07/16/2015
NOA# 14-0918.06
Miami Dade Product Control
By _____

FOR OFFICE USE ONLY

ENGINEER OF RECORD SEAL

CHELSEA G. WELCH
LICENSE
No 67221
STATE OF FLORIDA
PROFESSIONAL ENGINEER
5/26/2015

TOLERANCES
DECIMAL DIMENSIONS:
3 PLACE .XXX ± .010
2 PLACE .XX ± .020
FRACTION DIMENSIONS ± 1/16
ANGLE DIMENSIONS ± 2°
USE WIC-DOT & 008
UNLESS SPECIFIED OTHERWISE

ENGINEER OF RECORD	CHELSEA G. WELCH			
ENGINEERING DISCIPLINE	CIVIL/STRUCTURAL ENGINEERING			
REGISTRATION NUMBER	FL# 67221			
DWN. BY: JDL	CHK. BY: RKP	APP'D. BY: CGW	APP'D. BY:	
DATE: 8/21/14	DATE: 9/3/14	DATE: 9/5/14	DATE:	

CHANGE LETTER	REVISION DESCRIPTION	DWN. BY:	CHK'D. BY:	APP'D. BY:	APP'D. BY:	DATE
B	NO CHANGES ON THIS SHEET	NMM	RKP	CGW		5/21/15
A	NO CHANGES ON THIS SHEET	JDL	RKP	CGW		1/6/15

RUSKIN Air & Sound Control
3900 DR. GREAVES RD
GRANDVIEW, MO 64030

PLOT SCALE: NONE
ECN: _____

TITLE: HZ850 LOUVER PART DETAILS

DWG. NO. 60-022354-00B

SHEET 16 OF 21

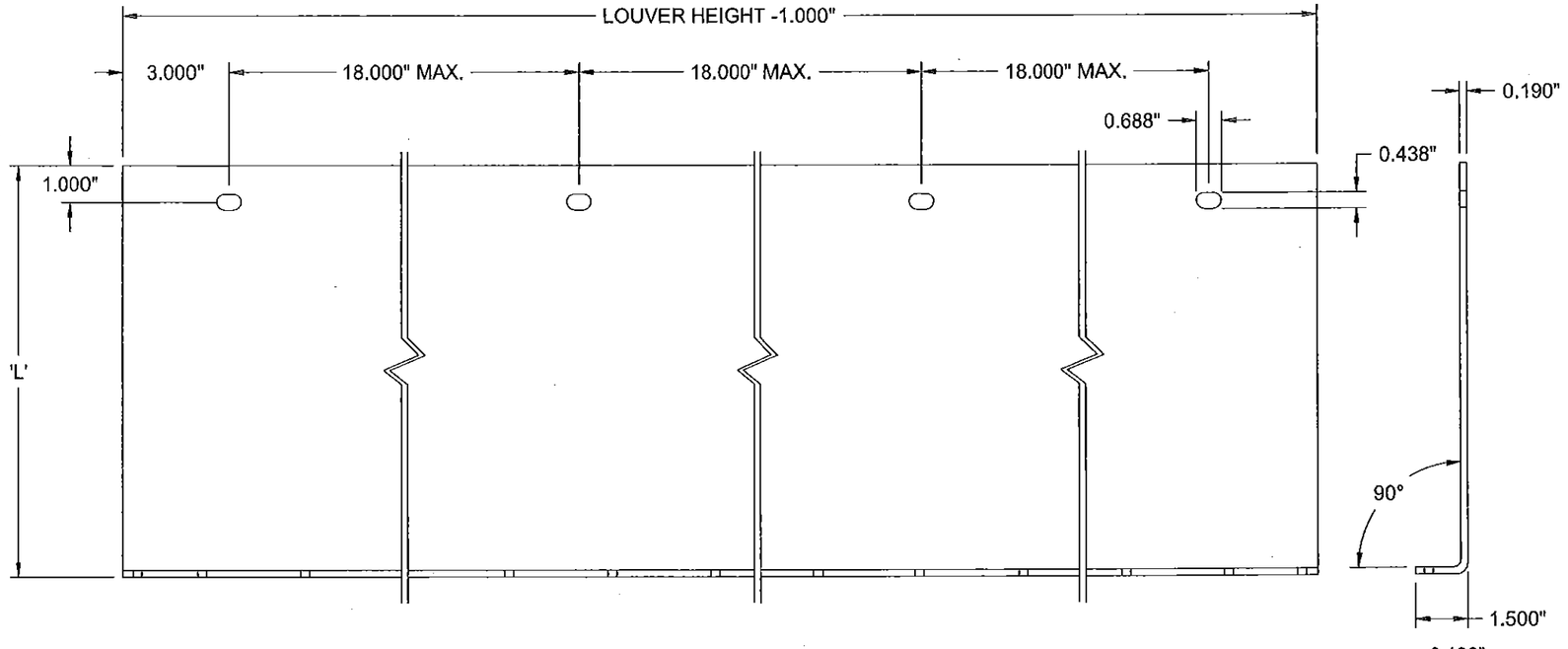

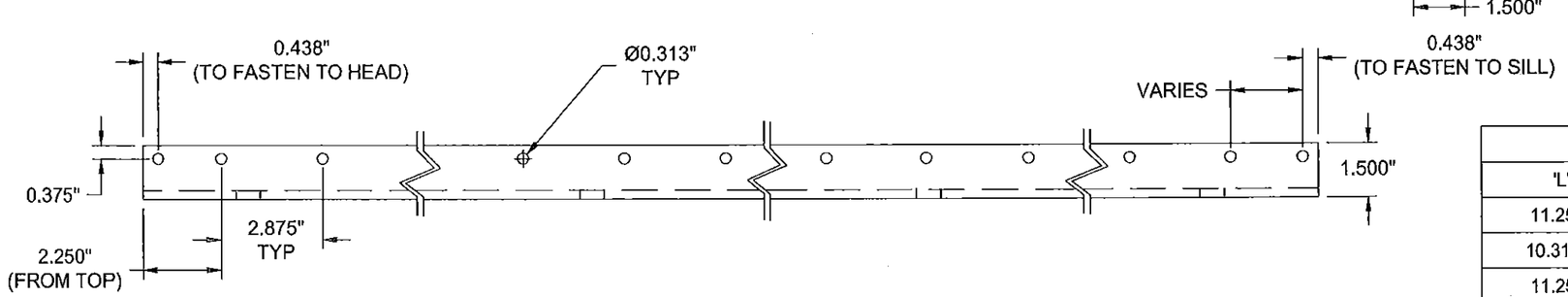

ITEM 16 - CONT. HVBS SUPPORT ANGLE

HZ850

N.T.S.
MATERIAL: 5005-H34 FORMED ALUM.

'D' = WALL DEPTH

ITEM 16 LENGTH	
'L'	SUBSTRATE (HVBS)
11.250"	WOOD/CONCRETE (C7 OR C6)
10.3125"	WOOD/CONCRETE (C5, C4 OR C3)
11.250"	STEEL
'D' + 5.125"	CMU

Approved as complying with the Florida Building Code
Date 07/16/2015
NOA# 14-0918.06
Miami Dade Product Control
By

FOR OFFICE USE ONLY

ENGINEER OF RECORD SEAL

CHELSEA G. WELCH
LICENSE
No 67221
STATE OF
FLORIDA
PROFESSIONAL ENGINEER
7/26/2015

TOLERANCES
DECIMAL DIMENSIONS:
3 PLACE .XXX +.010
2 PLACE .XX +.020
FRACTION DIMENSIONS: + 1/16
ANGLE DIMENSIONS + 2°
USE WIQ-007 & 008
UNLESS SPECIFIED OTHERWISE

ENGINEER OF RECORD	CHELSEA G. WELCH			
ENGINEERING DISCIPLINE	CIVIL/STRUCTURAL ENGINEERING			
REGISTRATION NUMBER	FL# 67221			
DWN. BY: JDL	CHK. BY: RKP	APP'D. BY: CGW	APP'D. BY:	
DATE: 8/21/14	DATE: 9/3/14	DATE: 9/5/14	DATE:	

CHANGE LETTER	REVISION DESCRIPTION	DWN. BY:	CHK'D. BY:	APP'D. BY:	APP'D. BY:	DATE
B	NO CHANGES ON THIS SHEET	NMM	RKP	CGW		5/21/15
A	NO CHANGES ON THIS SHEET	JDL	RKP	CGW		1/6/15

RUSKIN
Air & Sound Control
3900 DR. GREAVES RD
GRANDVIEW, MO 64030

PLOT SCALE: NONE
ECN:

TITLE: HZ850 LOUVER PART DETAILS

DWG. NO. 60-022354-00B

SHEET 17 OF 21

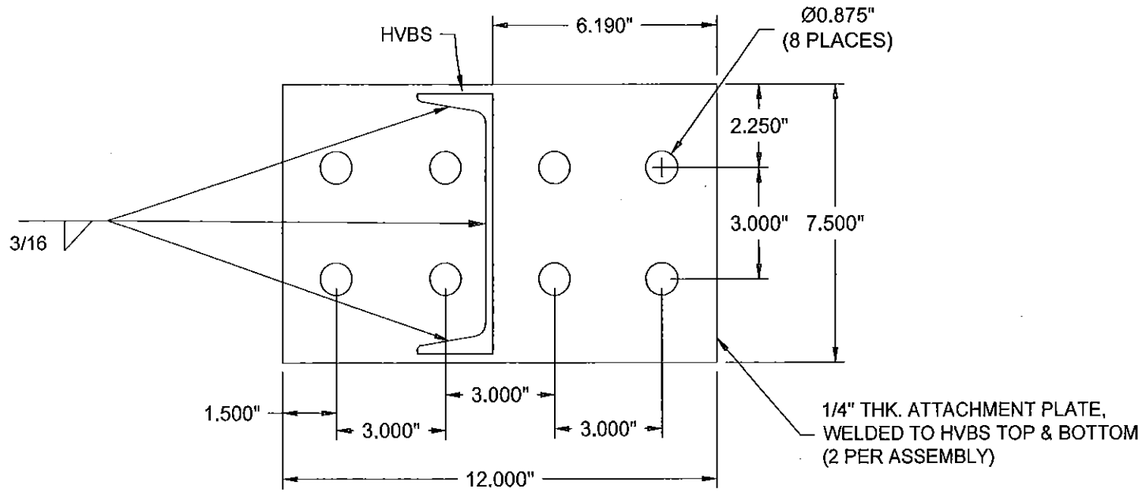

ITEM 17 - HVBS/ATTACHMENT PLATE ASSEMBLY

N.T.S. HZ850
HVBS MATERIAL: ASTM A36 STL.
PLATE MATERIAL: ASTM A36 STL.
FINISH: HOT DIP GALVANIZED
WOOD/CONCRETE SUBSTRATE W/C7 & C6

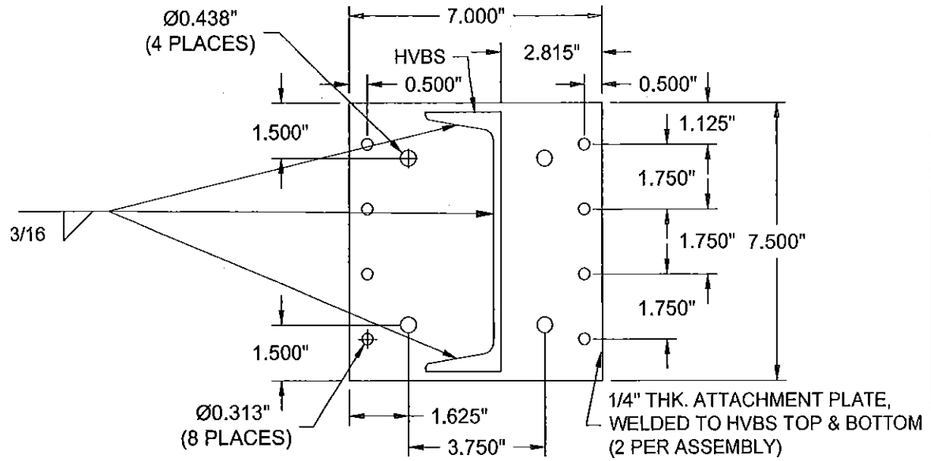

ITEM 19 - HVBS/ATTACHMENT PLATE ASSEMBLY

N.T.S. HZ850
HVBS MATERIAL: ASTM A36 STL.
PLATE MATERIAL: ASTM A36 STL.
FINISH: HOT DIP GALVANIZED
STEEL/CMU SUBSTRATE

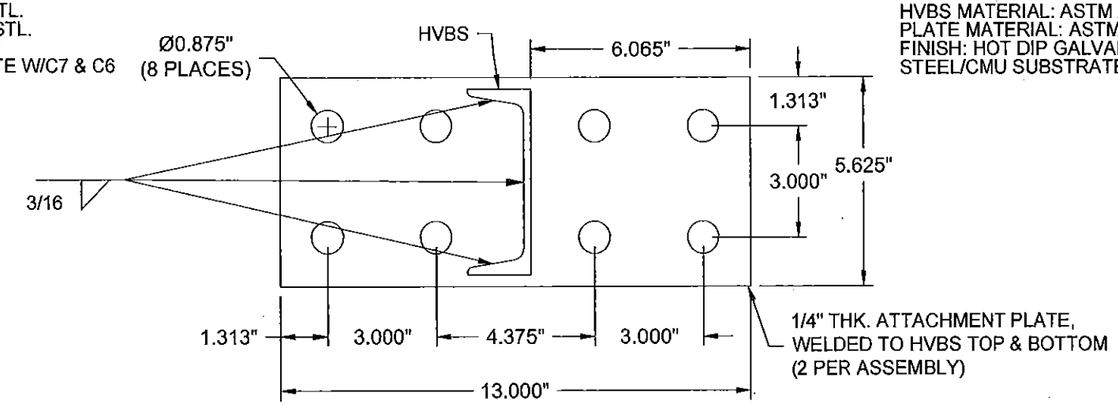

ITEM 18- HVBS/ATTACHMENT PLATE ASSEMBLY

N.T.S. HZ850
HVBS MATERIAL: ASTM A36 STL.
PLATE MATERIAL: ASTM A36 STL.
FINISH: HOT DIP GALVANIZED
WOOD/CONCRETE SUBSTRATE W/C5, C4 & C3

CHANGE LETTER	REVISION DESCRIPTION	DWN. BY:	CHK'D. BY:	APPV'D. BY:	APPV'D. BY:	DATE
B	NO CHANGES ON THIS SHEET	NMM	RKP	CGW		5/21/15
A	NO CHANGES ON THIS SHEET	JDL	RKP	CGW		1/6/15

Approved as complying with the Florida Building Code
Date 07/16/2015
NOA# 14-0918.06
Miami Dade Product Control
By

FOR OFFICE USE ONLY

ENGINEER OF RECORD SEAL

CHELSEA G. WELCH
LICENSE
No 67221
STATE OF FLORIDA
PROFESSIONAL ENGINEER

J 26/2015

TOLERANCES
DECIMAL DIMENSIONS:
3 PLACE .XXX ± .010
2 PLACE .XX ± .020
FRACTION DIMENSIONS: ± 1/16
ANGLE DIMENSIONS ± 2°
USE WIQ-007 & 008
UNLESS SPECIFIED OTHERWISE

ENGINEER OF RECORD	CHELSEA G. WELCH
ENGINEERING DISCIPLINE	CIVIL/STRUCTURAL ENGINEERING
REGISTRATION NUMBER	FL# 67221

DWN. BY:	CHK. BY:	APPV'D. BY:	APPV'D. BY:
JDL	RKP	CGW	
DATE: 8/21/14	DATE: 9/3/14	DATE: 9/5/14	DATE:

RUSKIN
Air & Sound Control
3900 DR. GREAVES RD
GRANDVIEW, MO 64030

PLOT SCALE: NONE
ECN:

TITLE: HZ850 LOUVER PART DETAILS

DWG. NO. 60-022354-00B

SHEET 18 OF 21

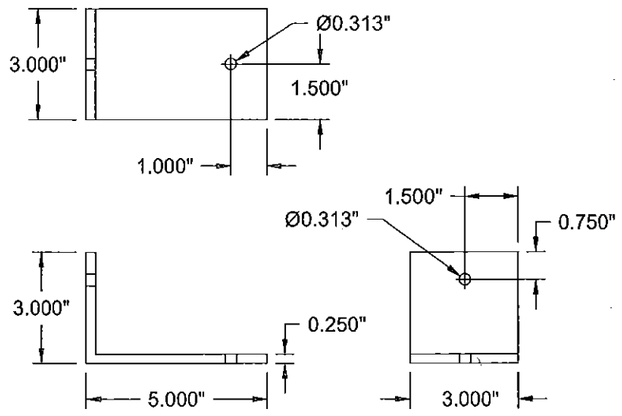

ITEM 20 - CMU ANGLE

N.T.S. HZ850
MATERIAL: 6061-T6 EXTRUDED ALUM.

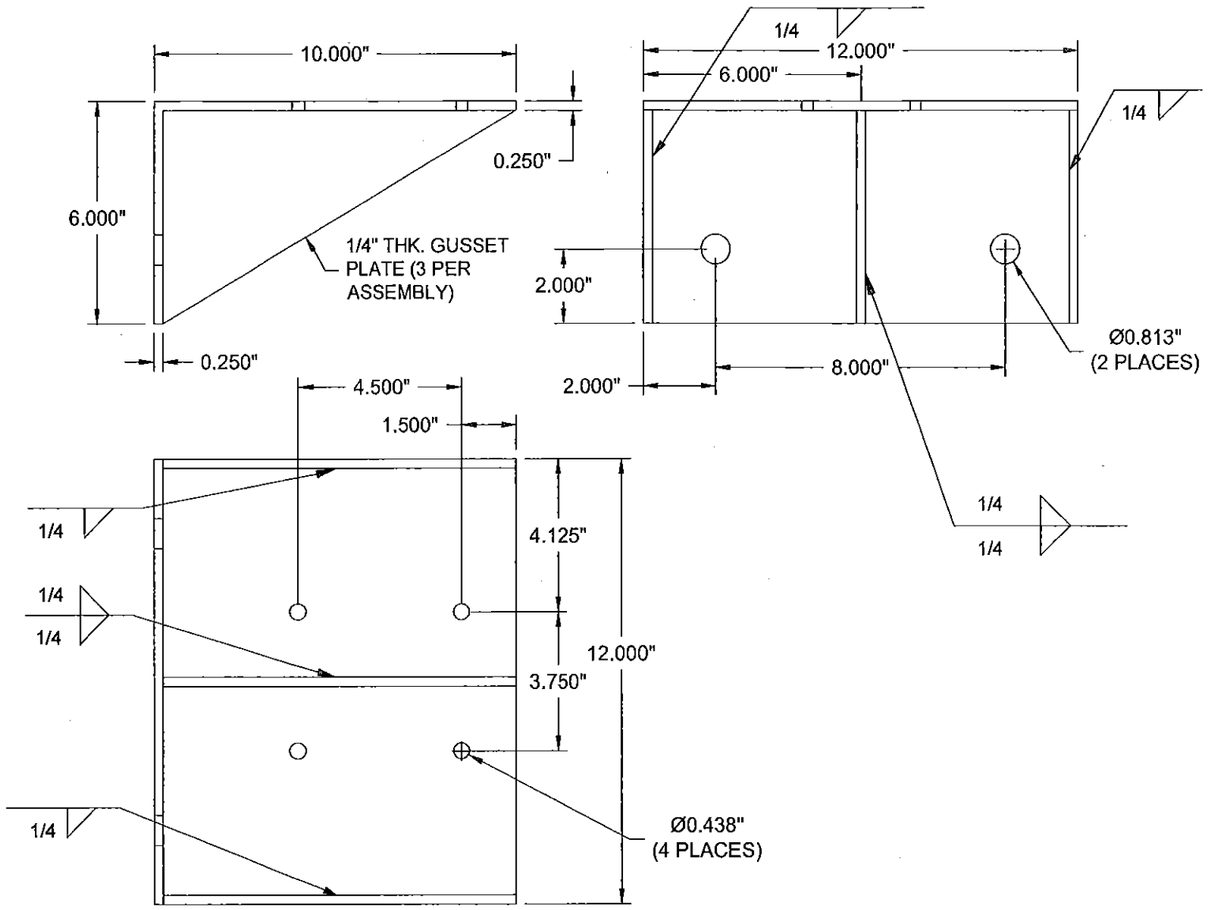

ITEM 21 - CMU ANGLE/GUSSET PLATE ASSEMBLY

N.T.S. HZ850
ANGLE MATERIAL: 5005-H34 FORMED ALUM.
PLATE MATERIAL: 5005-H34 FORMED ALUM.

Approved as complying with the Florida Building Code
Date 07/16/2015
NOA# 14-0918.06
Miami Dade Product Control
By

FOR OFFICE USE ONLY

ENGINEER OF RECORD SEAL

CHELSEA G. WELCH LICENSE No 67221 STATE OF FLORIDA PROFESSIONAL ENGINEER
7/16/2015

TOLERANCES
DECIMAL DIMENSIONS:
3 PLACE .XXX +.010
2 PLACE .XX +.020
FRACTION DIMENSIONS: ± 1/16
ANGLE DIMENSIONS ± 2°
USE WIC-007 & 008
UNLESS SPECIFIED OTHERWISE

ENGINEER OF RECORD	CHELSEA G. WELCH
ENGINEERING DISCIPLINE	CIVIL/STRUCTURAL ENGINEERING
REGISTRATION NUMBER	FL# 67221

DWN. BY:	CHK. BY:	APPV'D. BY:	APPV'D. BY:
JDL	RKP	CGW	
DATE: 8/21/14	DATE: 9/3/14	DATE: 9/5/14	DATE:

CHANGE LETTER	REVISION DESCRIPTION	DWN. BY:	CHK'D. BY:	APPV'D. BY:	APPV'D. BY:	DATE
B	NO CHANGES ON THIS SHEET	NMM	RKP	CGW		5/21/15
A	NO CHANGES ON THIS SHEET	JDL	RKP	CGW		1/6/15

RUSKIN Air & Sound Control
3900 DR. GREAVES RD
GRANDVIEW, MO 64030

PLOT SCALE: NONE
ECN:

TITLE: HZ850 LOUVER PART DETAILS

DWG. NO. 60-022354-00B

SHEET 19 of 21

ASSEMBLY A & B SUPPORT TABLE

LOUVER HEIGHT	HVBS	HVBS TO WOOD ATTACHMENT	HVBS TO STEEL ATTACHMENT	HVBS TO CONCRETE ATTACHMENT	HVBS TO CMU ATTACHMENT
FROM 94" TO 96"	C7x9.8	DETAILS 6, 7, 8; ITEMS 16, 17	DETAILS 6A, 7A, 8A, 6B, 7B, 8B; ITEMS 16, 19	DETAILS 6C, 7C, 8C; ITEMS 16, 17	DETAILS 6D, 7D, 8D; ITEMS 16, 19
FROM 84" TO 94"	C6x8.2	DETAILS 6, 7, 8; ITEMS 16, 17	DETAILS 6A, 7A, 8A, 6B, 7B, 8B; ITEMS 16, 19	DETAILS 6C, 7C, 8C; ITEMS 16, 17	DETAILS 6D, 7D, 8D; ITEMS 16, 19
FROM 73" TO 84"	C5x6.7	DETAILS 6, 7, 8; ITEMS 16, 18	DETAILS 6A, 7A, 8A, 6B, 7B, 8B; ITEMS 16, 19	DETAILS 6C, 7C, 8C; ITEMS 16, 18	DETAILS 6D, 7D, 8D; ITEMS 16, 19
FROM 59" TO 73"	C4x5.4	DETAILS 6, 7, 8; ITEMS 16, 18	DETAILS 6A, 7A, 8A, 6B, 7B, 8B; ITEMS 16, 19	DETAILS 6C, 7C, 8C; ITEMS 16, 18	DETAILS 6D, 7D, 8D; ITEMS 16, 19
FROM 12" TO 59"	C3x4.1	DETAILS 6, 7, 8; ITEMS 16, 18	DETAILS 6A, 7A, 8A, 6B, 7B, 8B; ITEMS 16, 19	DETAILS 6C, 7C, 8C; ITEMS 16, 18	DETAILS 6D, 7D, 8D; ITEMS 16, 19

Approved as complying with the Florida Building Code
Date 07/07/2015
NOA# 14-0918.06
Miami Dade Product Control
By

FOR OFFICE USE ONLY

ENGINEER OF RECORD SEAL

CHELSEA G. WELCH
LICENSE
No 67221
STATE OF
FLORIDA
PROFESSIONAL ENGINEER
1/26/2015

TOLERANCES
DECIMAL DIMENSIONS:
3 PLACE .XXX +.010
2 PLACE .XX +.020
FRACTION DIMENSIONS: + 1/16
ANGLE DIMENSIONS + 2°
USE WIQ-007 & 008
UNLESS SPECIFIED OTHERWISE

ENGINEER OF RECORD: CHELSEA G. WELCH
ENGINEERING DISCIPLINE: CIVIL/STRUCTURAL ENGINEERING
REGISTRATION NUMBER: FL# 67221

DWN. BY:	CHK. BY:	APPV'D. BY:	APPV'D. BY:
JDL	RKP	CGW	
DATE: 8/21/14	DATE: 9/3/14	DATE: 9/5/14	DATE:

CHANGE LETTER	REVISION DESCRIPTION	DWN. BY:	CHK'D. BY:	APPV'D. BY:	APPV'D. BY:	DATE
B	NO CHANGES ON THIS SHEET	NMM	RKP	CGW		5/21/15
A	NO CHANGES ON THIS SHEET	JDL	RKP	CGW		1/6/15

RUSKIN
Air & Sound Control
3900 DR GREAVES RD
GRANDVIEW, MO 64030

PLOT SCALE: NONE
ECN:

TITLE: HZ850 LOUVER SUPPORT TABLE

DWG. NO. 60-022354-00B

SHEET 20 of 21