MIAMI-DADE COUNTY
DEPARTMENT OF REGULATORY AND ECONOMIC RESOURCES (RER)
BOARD AND CODE ADMINISTRATION DIVISION

MIAMI-DADE COUNTY
PRODUCT CONTROL SECTION
11805 SW 26 Street, Room 208
T (786) 315-2590 F (786) 315-2599
www.miamidade.gov/economy

NOTICE OF ACCEPTANCE (NOA)

Tecnoglass, LLC
5220 NW 72nd Avenue, Bay No. 4
Miami, FL 33166

SCOPE:

This NOA is being issued under the applicable rules and regulations governing the use of construction materials. The documentation submitted has been reviewed and accepted by Miami-Dade County RER-Product Control Section to be used in Miami-Dade County and other areas where allowed by the Authority Having Jurisdiction (AHJ).

This NOA shall not be valid after the expiration date stated below. The Miami-Dade County Product Control Section (In Miami-Dade County) and/ or the AHJ (in areas other than Miami-Dade County) reserve the right to have this product or material tested for quality assurance purposes. If this product or material fails to perform in the accepted manner, the manufacturer will incur the expense of such testing and the AHJ may immediately revoke, modify, or suspend the use of such product or material within their jurisdiction. RER reserves the right to revoke this acceptance, if it is determined by Miami-Dade County Product Control Section that this product or material fails to meet the requirements of the applicable building code.

This product is approved as described herein, and has been designed to comply with the Florida Building Code, including the High Velocity Hurricane Zone.

DESCRIPTION: Series "500-Y" Aluminum Single Hung Window – S.M.I.

APPROVAL DOCUMENT: Drawing No. **W03-111**, titled "Series 500Y Alum. Single Hung Window (S.M.I.)", sheets 01 through 10 of 10, dated 12/11/03, with revision "**H**" dated 04/08/15, prepared by Al-Farooq Corporation, signed and sealed by Javad Ahmad, P. E., bearing the Miami-Dade County Product Control Renewal stamp with the Notice of Acceptance number and Expiration date by the Miami-Dade County Product Control Section.

MISSILE IMPACT RATING: Small Missile Impact Resistant.

LABELING: Each unit shall bear a permanent label with the manufacturer's name or logo, city, state, series, and following statement: "Miami-Dade County Product Control Approved", unless otherwise noted herein.

REVISION of this NOA shall be considered after a renewal application has been filed and there has been no change in the applicable building code negatively affecting the performance of this product.

TERMINATION of this NOA will occur after the expiration date or if there has been a revision or change in the materials, use, and/ or manufacture of the product or process. Misuse of this NOA as an endorsement of any product, for sales, advertising or any other purposes shall automatically terminate this NOA. Failure to comply with any section of this NOA shall be cause for termination and removal of NOA.

ADVERTISEMENT: The NOA number preceded by the words Miami-Dade County, Florida, and followed by the expiration date may be displayed in advertising literature. If any portion of the NOA is displayed, then it shall be done in its entirety.

INSPECTION: A copy of this entire NOA shall be provided to the user by the manufacturer or its distributors and shall be available for inspection at the job site at the request of the Building Official.

This NOA **revises and renews NOA No. 12-0330.12** and consists of this page 1 and evidence pages E-1 and E-2, as well as approval document mentioned above.

The submitted documentation was reviewed by **Jaime D. Gascon, P. E.**

MIAMI-DADE COUNTY APPROVED

J. Gascon
4/15/15

NOTICE OF ACCEPTANCE: EVIDENCE SUBMITTED

A. DRAWINGS

1. Manufacturer's die drawings and sections.
   (Submitted under previous NOA's No.'s 05–0519.01, 07–0706.07 and 10–0426.08)
2. Drawing No. **W03–111**, titled "Series 500Y Alum. Single Hung Window (S.M.I.)", sheets 01 through 10 of 10, dated 10/24/03, with revision "**H**" dated 04/08/15, prepared by Al–Farooq Corporation, signed and sealed by Javad Ahmad, P. E.

B. TESTS

1. Test reports on: 1) Air Infiltration Test, per FBC, TAS 202–94
   2) Uniform Static Air Pressure Test, Loading per FBC TAS 202–94
   3) Water Resistance Test, per FBC, TAS 202–94
   4) Small Missile Impact Test per FBC, TAS 201–94
   5) Cyclic Wind Pressure Loading per FBC, TAS 203–94
   6) Forced Entry Test, Type "A–A" vertical sliding window, Grade 10, Level LV 1 per ASTM F 588 and per FBC 2411 3.2.1, TAS 202–94
   7) Impact Test per FBC, ANSI Z97.1 Standard for Safety Glazing Materials Used in Buildings / CPSC 16 CFR 1201 Category II Safety Standard for Architectural Glazing Materials

   along with marked–up drawings and installation diagram of an aluminum single hung window, prepared by the Fenestration Testing Laboratory, Inc., the following Test Reports No.'s:

   I. **FTL–5988**, dated 08/31/09, signed and sealed by Julio E. Gonzalez, P. E.
   (Submitted under previous NOA No. 10–0426.08)

   II. **FTL–5321**, dated 07/05/07, signed and sealed by Carlos S. Rionda, P. E.
   (Submitted under previous NOA No. 07–0706.07)

   III. **FTL–4526**, **FTL–4352** and **FTL–4268**, dated 02/18/05, 01/10/05 and 01/10/05, all signed and sealed by Edmundo J. Largaespada, P. E.
   (Submitted under previous NOA No. 05–0519.01)

C. CALCULATIONS

1. Anchor verification calculations and structural analysis, complying with **FBC 5th Edition (2014)**, dated 04/07/15, prepared by Al–Farooq Corporation, signed and sealed, by Javad Ahmad, P. E.
2. **Glazing complies with ASTM E1300–04/ 09**

D. QUALITY ASSURANCE

1. Miami–Dade Department of Regulatory and Economic Resources (RER).

Jaime D. Gascon, P.E.
Product Control Section Supervisor
NOA No. 14–0923.06
Expiration Date: June 23, 2020
Approval Date: April 23, 2015

NOTICE OF ACCEPTANCE: EVIDENCE SUBMITTED

E. MATERIAL CERTIFICATIONS

1. Notice of Acceptance No. **14–0916.11** issued to **Kuraray America, Inc.** for their **"Kuraray SentryGlas® Interlayer"** expiring on 01/14/17.
2. Notice of Acceptance No. **14–0916.10** issued to **Kuraray America, Inc.** for their **"Kuraray PVB Glass Interlayer"** expiring on 12/11/16.
3. Notice of Acceptance No. **14–0423.17** issued to **Eastman Chemical Company (MA)** for their "**Saflex Clear and Color Glass Interlayers**" dated 06/19/14, expiring on 05/21/16.

F. STATEMENTS

1. Statement letter of conformance, complying with the **FBC 5th Edition (2014)**, and of no financial interest, dated 04/08/15, signed and sealed by Javad Ahmad, P. E.
2. Asset purchase agreement dated 06/19/14, signed by Mr. Raul Casares, for and on behalf of R.C. Aluminum Industries, Inc. and Mr. José M. Daes, for and on behalf of Tecnoglass, LLC.
3. Statement letter dated 07/15/14, issued by R.C. Aluminum Industries, Inc. of sales of asset and relinquishing of all rights of NOA No. **12–0330.12**, signed by Raul Casares, for and on behalf of R.C. Aluminum Industries, Inc.
4. Department of State Certification of **TECNOGLASS, LLC** as a limited liability company, active and organized under the laws of the State of Florida, dated 03/03/14 and signed by Ken Detzner, Secretary of State.
5. Statement letter of conformance, complying with the **FBC–2010**, and of no financial interest, dated 03/02/12, signed and sealed by Javad Ahmad, P. E.
   (Submitted under NOA No. 12–0330.12)
6. Laboratory compliance letters prepared by Fenestration Testing Laboratory, Inc., for the following Test Reports No.'s:
   I. **FTL–5988**, dated 08/31/09, signed and sealed by Julio E. Gonzalez, P. E.
   (Submitted under previous NOA No. 10–0426.08)
   II. **FTL–5321**, dated 07/05/07, signed and sealed by Carlos S. Rionda, P. E.
   (Submitted under previous NOA No. 07–0706.07)
   III. **FTL–4526**, **FTL–4352** and **FTL–4268**, dated 02/18/05, 01/10/05 and 01/10/05, all signed and sealed by Edmundo J. Largaespada, P. E.
   (Submitted under previous NOA No. 05–0519.01)

G. OTHERS

1. Notice of Acceptance No. **12–0330.12**, issued to R. C. Aluminum Industries, Inc., for their Series "500–Y" Aluminum Single Hung Window – S.M.I.", approved on 07/21/12 and expiring on 06/23/15.

Jaime D. Gascon, P.E.
Product Control Section Supervisor
NOA No. 14–0923.06
Expiration Date: June 23, 2020
Approval Date: April 23, 2015

THESE WINDOWS ARE RATED FOR SMALL MISSILE IMPACT. MIAMI-DADE COUNTY APPROVED IMPACT RESISTANT SHUTTERS ARE REQUIRED FOR INSTALLATIONS UPTO 30 FT. OF GRADE. SHUTTERS NOT REQUIRED FOR INSTALLATIONS ABOVE 30 FT. OF GRADE.

SERIES 500Y
ALUMINUM SINGLE HUNG WINDOW

APPROVAL APPLIES TO SINGLE UNITS OR SIDE BY SIDE COMBINATIONS OF S.H. TO S.H. OR S.H./FIX. TO S.H./FIX. IN MODULES OF TWO OR MORE WINDOWS USING MIAMI-DADE COUNTY APPROVED MULLIONS IN BETWEEN.
FOR S.H. WINDOW CAPACITY SEE CHARTS ON SHEETS 3 & 4.
FOR WINDOWALL BOTTOM LITE CAPACITY SEE CHART ON SHEET 7.
FOR WINDOW MULLION CAPACITY SEE CHART ON SHEET 7.
LOWER DESIGN PRESSURES FROM CHARTS ABOVE WILL APPLY TO ENTIRE SYSTEM.

THIS PRODUCT HAS BEEN DESIGNED AND TESTED TO COMPLY WITH THE REQUIREMENTS OF THE FLORIDA BUILDING CODE INCLUDING HIGH VELOCITY HURRICANE ZONE (HVHZ).

WOOD BUCKS BY OTHERS, MUST BE ANCHORED PROPERLY TO TRANSFER LOADS TO THE STRUCTURE.

ANCHORS SHALL BE AS LISTED, SPACED AS SHOWN ON DETAILS, ANCHORS EMBEDMENT TO BASE MATERIAL SHALL BE BEYOND WALL DRESSING OR STUCCO.

ANCHORING OR LOADING CONDITIONS NOT SHOWN IN THESE DETAILS ARE NOT PART OF THIS APPROVAL.

A LOAD DURATION INCREASE IS USED IN DESIGN OF ANCHORS INTO WOOD ONLY.

ALL SHIMS TO BE HIGH IMPACT, NON-METALLIC AND NON-COMPRESSIBLE.

MATERIALS INCLUDING BUT NOT LIMITED TO STEEL/METAL SCREWS, THAT COME INTO CONTACT WITH OTHER DISSIMILAR MATERIALS SHALL MEET THE REQUIREMENTS OF THE FLORIDA BUILDING CODE.

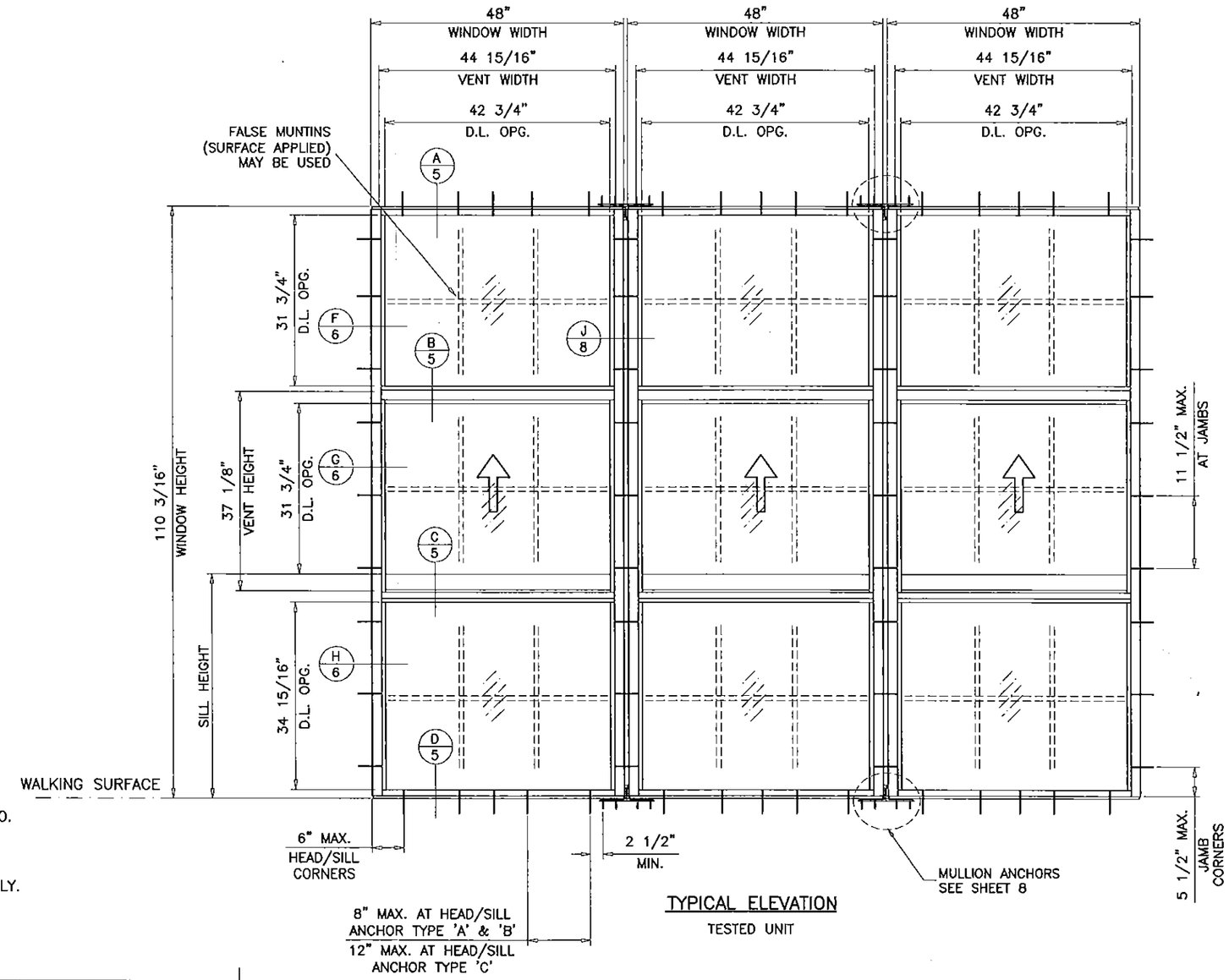

TYPICAL ELEVATION

TESTED UNIT

PRODUCT COMPLY WITH REQUIREMENTS OF ANSI Z97.1. WITH MINIMUM SILL HEIGHT OF 36 IN. ABOVE WALKING SURFACE.

LAMINATED GLASS
SMALL MISSILE IMPACT

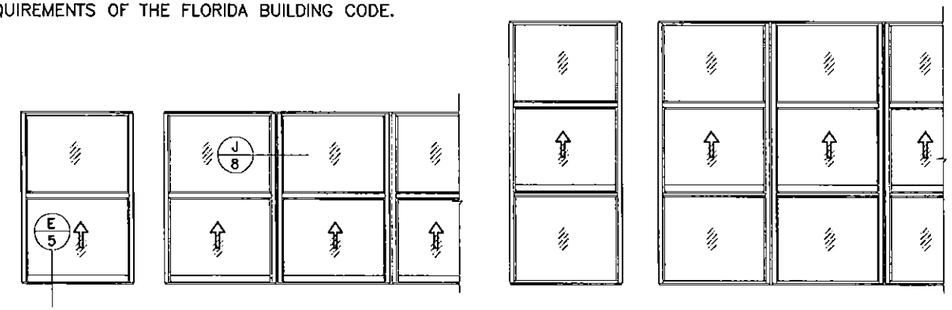

APPROVED CONFIGURATIONS

APPROVAL APPLIES TO INDIVIDUAL UNITS OF SINGLE HUNG WINDOWS OR SINGLE HUNG OVER FIXED WINDOWS. ALSO SIDE BY SIDE COMBINATIONS OF S.H. TO S.H. OR S.H./FIX. TO S.H./FIX. IN MODULES OF TWO OR MORE UNITS USING MULLIONS.

PRODUCT RENEWED
as complying with the Florida Building Code
Acceptance No 14-0923.06
Expiration Date 06/23/2020
By
Miami-Dade Product Control

Engr: JAVAD AHMAD
CIVIL
FLA. PE # 70592
C.A.N. 3538
APR 09 2015

AL-FAROOQ CORPORATION
ENGINEERS & PRODUCT DEVELOPMENT
1235 S.W. 87 AVE
MIAMI, FLORIDA 33174
TEL. (305) 264-8100 FAX. (305) 262-6978
COMP-ANL\W03-111RC

SERIES 500Y ALUM SINGLE HUNG WINDOW (S.M.I.)

TECNOGLASS, LLC
10653 N.E. QUAYBRIDGE CT.
MIAMI, FL. 33138
TEL. (305) 342-0890 FAX. (305) 624-7767

revisions:

no	date	by	description
D	08.01.07		NOTE ADDED
E	11.11.09		UPDATED FOR 2007 FBC
F	06.07.10		REV. PER BCCO COMMENTS
G	03.05.12		UPDATED TO 2010 FBC
H	04.08.15		UPDATED TO 2014 FBC

date: 12-11-03
scale: 1/2"=1'-0"
dr. by: HAMID
chk. by:

drawing no.
W03-111

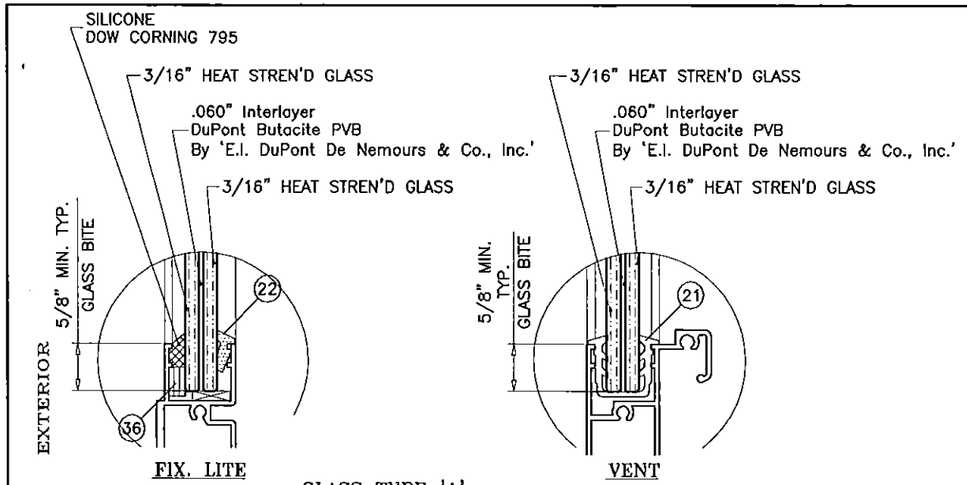

GLASS TYPE 'A'

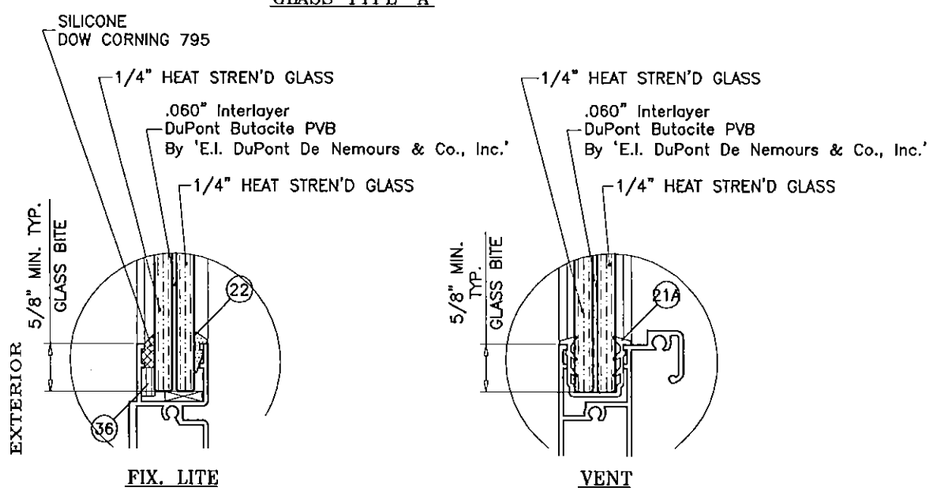

GLASS TYPE 'B'

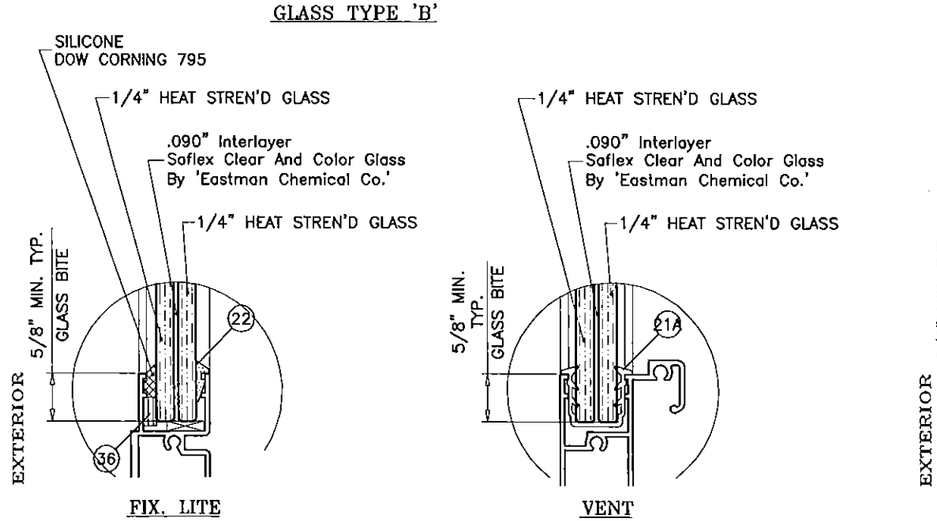

GLASS TYPE 'C'

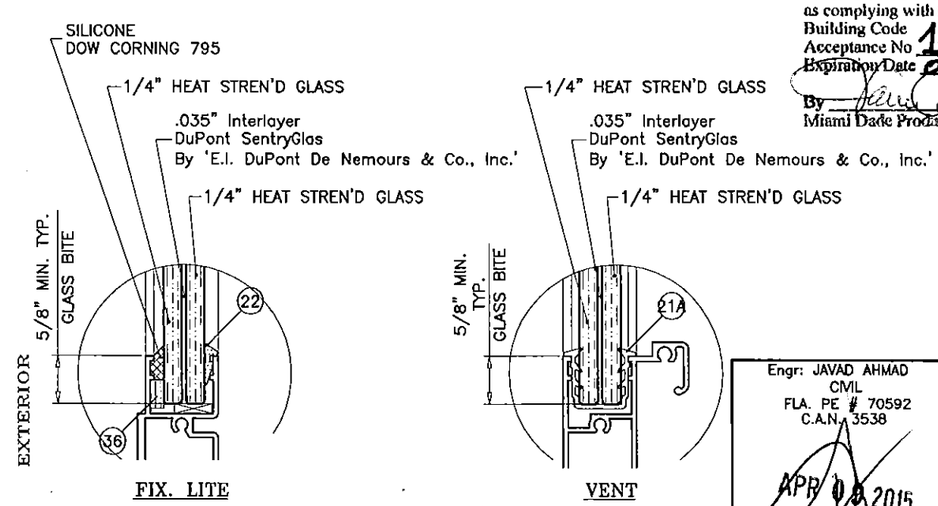

GLASS TYPE 'D'

GLAZING OPTIONS

PRODUCT RENEWED
as complying with the Florida
Building Code
Acceptance No 14-0923.06
Expiration Date 06/23/2020
By
Miami Dade Product Control

Engr: JAVAD AHMAD
CIVIL
FLA. PE # 70592
C.A.N. 3538
APR 0 9 2015

AL-FAROOQ CORPORATION
ENGINEERS & PRODUCT DEVELOPMENT
1235 S.W. 87 AVE
MIAMI, FLORIDA 33174
TEL (305) 264-8100 FAX. (305) 262-6978
COMP-ANL\W03-111RC

SERIES 500Y ALUM SINGLE HUNG WINDOW (S.M.I.)

TECNOGLASS, LLC
10653 N.E. QUAYBRIDGE CT.
MIAMI, FL. 33138
TEL (305) 342-0890 FAX. (305) 624-7767

revisions:

no	date	by	description
D	08.01.07		NO CHANGE THIS SHEET
E	11.11.09		UPDATED FOR 2007 FBC
F	06.07.10		NO CHANGE THIS SHEET
G	03.05.12		UPDATED TO 2010 FBC
H	04.08.15		UPDATED TO 2014 FBC

date: 12-11-03
scale: 1/2"=1'-0"
dr. by: HAMID
chk. by:

drawing no.
W03-111

EQUAL LITES SINGLE HUNG WINDOWS

DESIGN LOAD CAPACITY – PSF

WINDOW DIMS.		GLASS TYPE 'A' & 'B'		GLASS TYPE 'C'		GLASS TYPE 'D'	
WIDTH	HEIGHT	EXT.(+)	INT.(–)	EXT.(+)	INT.(–)	EXT.(+)	INT.(–)
36"	36"	100.0	130.0	100.0	140.0	100.0	130.0
42"		100.0	130.0	100.0	140.0	100.0	130.0
48"		100.0	130.0	100.0	140.0	100.0	130.0
54"		100.0	130.0	100.0	140.0	100.0	130.0
60"		89.7	116.6	89.7	116.6	83.3	108.3
66"		67.0	87.1	67.0	87.1	62.2	80.9
72"		51.3	66.7	51.3	66.7	47.7	62.0
36"	42"	100.0	130.0	100.0	140.0	100.0	130.0
42"		100.0	130.0	100.0	140.0	100.0	130.0
48"		100.0	130.0	100.0	140.0	100.0	130.0
54"		100.0	130.0	100.0	140.0	100.0	130.0
60"		77.9	101.3	77.9	101.3	72.4	94.1
66"		58.0	75.4	58.0	75.4	53.9	70.1
72"		44.4	57.7	44.4	57.7	41.2	53.6
36"	48"	100.0	130.0	100.0	140.0	100.0	130.0
42"		100.0	130.0	100.0	140.0	100.0	130.0
48"		100.0	130.0	100.0	140.0	100.0	130.0
54"		96.5	125.5	96.5	125.5	89.6	116.5
60"		69.2	90.0	69.2	90.0	64.3	83.6
66"		51.4	66.9	51.4	66.9	47.8	62.1
72"		39.3	51.1	39.3	51.1	36.5	47.4
36"	54"	100.0	130.0	100.0	140.0	100.0	130.0
42"		100.0	130.0	100.0	140.0	100.0	130.0
48"		100.0	130.0	100.0	140.0	100.0	130.0
54"		87.7	114.0	87.7	114.0	81.5	105.9
60"		62.7	81.5	62.7	81.5	58.2	75.7
66"		46.4	60.3	46.4	60.3	–	–
72"		35.3	45.9	–	–	–	–
36"	60"	100.0	130.0	100.0	140.0	100.0	130.0
42"		100.0	130.0	100.0	140.0	100.0	130.0
48"		100.0	130.0	100.0	140.0	100.0	130.0
54"		81.0	105.3	81.0	105.3	75.2	97.8
60"		57.6	74.8	57.6	74.8	–	–
66"		42.4	55.2	–	–	–	–
36"	66"	100.0	130.0	100.0	140.0	100.0	130.0
42"		100.0	130.0	100.0	140.0	100.0	130.0
48"		100.0	130.0	100.0	133.7	100.0	130.0
54"		75.8	98.5	75.8	98.5	–	–
60"		53.5	69.6	–	–	–	–
36"	72"	100.0	130.0	100.0	140.0	100.0	130.0
42"		100.0	130.0	100.0	140.0	100.0	130.0
48"		100.0	130.0	100.0	129.4	100.0	130.0
54"		71.7	93.2	–	–	–	–
36"	78"	100.0	130.0	100.0	140.0	100.0	130.0
42"		100.0	130.0	100.0	140.0	100.0	130.0
48"		100.0	130.0	–	–	100.0	129.4
54"		68.5	89.1	–	–	–	–

EQUAL LITES SINGLE HUNG WINDOWS

DESIGN LOAD CAPACITY – PSF

WINDOW DIMS.		GLASS TYPE 'A' & 'B'		GLASS TYPE 'C'		GLASS TYPE 'D'	
WIDTH	HEIGHT	EXT.(+)	INT.(–)	EXT.(+)	INT.(–)	EXT.(+)	INT.(–)
36"	84"	100.0	130.0	100.0	140.0	100.0	130.0
42"		100.0	130.0	100.0	140.0	100.0	130.0
48"		100.0	125.1	–	–	–	–
36"	89–1/4"	100.0	130.0	100.0	140.0	100.0	130.0
42"		100.0	130.0	–	–	100.0	130.0
48"		100.0	124.7	–	–	–	–
36"	90"	100.0	130.0	100.0	140.0	100.0	130.0
42"		100.0	130.0	–	–	100.0	130.0
36"	96"	100.0	130.0	100.0	140.0	100.0	130.0
42"		100.0	130.0	–	–	100.0	130.0

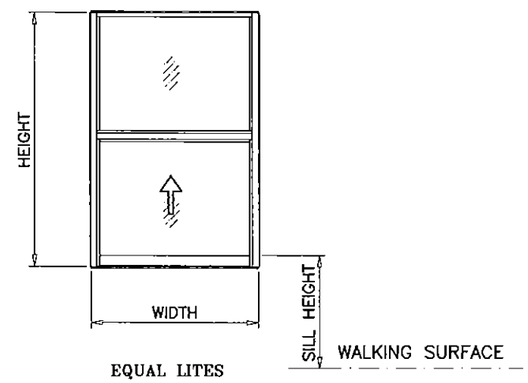

EQUAL LITES
SINGLE HUNG WINDOWS

NOTE:
GLASS CAPACITIES ON THIS SHEET ARE BASED ON ASTM E1300–09 (3 SEC. GUSTS) AND FLORIDA BUILDING COMMISSION DECLARATORY STATEMENT DCA05–DEC–219

PRODUCT RENEWED
as complying with the Florida
Building Code
Acceptance No 14-0923.06
Expiration Date 06/23/2020
By
Miami Dade Product Control

Engr: JAVAD AHMAD
CIVIL
FLA. PE # 70592
C.A.N. 0538
APR 09 2015

AL-FAROOQ CORPORATION
ENGINEERS & PRODUCT DEVELOPMENT
1235 S.W. 87 AVE
MIAMI, FLORIDA 33174
TEL. (305) 264-8100 FAX. (305) 262-6978
COMP-ANL\W03-111RC

SERIES 500Y ALUM SINGLE HUNG WINDOW (S.M.I.)

TECNOGLASS, LLC
10653 N.E. QUAYBRIDGE CT.
MIAMI, FL. 33138
TEL (305) 342-0890 FAX. (305) 624-7767

revisions:

no	date	by	description
D	08.01.07		NO CHANGE THIS SHEET
E	11.11.09		UPDATED FOR 2007 FBC
F	06.07.10		NO CHANGE THIS SHEET
G	03.05.12		NO CHANGE THIS SHEET
H	04.08.15		UPDATED TO 2014 FBC

date: 12–11–03
scale: 1/2"=1'-0"
dr. by: HAMID
chk. by:

drawing no.
W03–111

UNEQUAL LITES SINGLE HUNG WINDOWS							
DESIGN LOAD CAPACITY – PSF							
WINDOW DIMS.		GLASS TYPE 'A' & 'B'		GLASS TYPE 'C'		GLASS TYPE 'D'	
WIDTH	HEIGHT	EXT.(+)	INT.(–)	EXT.(+)	INT.(–)	EXT.(+)	INT.(–)
36"	48"	100.0	130.0	106.7	140.0	100.0	130.0
42"		100.0	130.0	106.7	140.0	100.0	130.0
48"		100.0	130.0	106.7	140.0	100.0	130.0
54"		81.9	110.5	81.9	110.5	93.7	121.8
60"		58.7	79.3	58.7	79.3	66.7	86.7
66"		43.6	58.9	43.6	58.9	49.2	64.0
72"		33.3	45.0	33.3	45.0	37.4	48.6
36"	54"	100.0	130.0	106.7	140.0	100.0	130.0
42"		100.0	130.0	106.7	140.0	100.0	130.0
48"		100.0	130.0	106.7	140.0	100.0	130.0
54"		74.9	101.1	74.9	101.1	87.9	114.3
60"		53.4	72.1	53.4	72.1	61.9	80.4
66"		39.5	53.3	39.5	53.3	–	–
72"		30.1	40.6	–	–	–	–
36"	60"	100.0	130.0	106.7	140.0	100.0	130.0
42"		100.0	130.0	106.7	140.0	100.0	130.0
48"		100.0	130.0	103.1	139.2	100.0	130.0
54"		70.1	94.7	70.1	94.7	84.4	109.7
60"		49.6	67.0	49.6	67.0	–	–
66"		36.5	49.3	–	–	–	–
72"		27.7	37.3	–	–	–	–
36"	66"	100.0	130.0	106.7	140.0	100.0	130.0
42"		100.0	130.0	106.7	140.0	100.0	130.0
48"		100.0	130.0	100.6	135.9	100.0	130.0
54"		67.1	90.5	67.1	90.5	–	–
60"		47.0	63.5	–	–	–	–
66"		34.3	46.3	–	–	–	–
72"		25.9	34.9	–	–	–	–
36"	72"	100.0	130.0	106.7	140.0	100.0	130.0
42"		100.0	130.0	106.7	140.0	100.0	130.0
48"		100.0	130.0	100.0	135.0	100.0	130.0
54"		65.4	88.2	–	–	–	–
60"		45.3	61.1	–	–	–	–
66"		32.8	44.2	–	–	–	–
36"	78"	100.0	130.0	106.7	140.0	100.0	130.0
42"		100.0	130.0	106.7	140.0	100.0	130.0
48"		100.0	130.0	100.0	135.0	–	–
54"		64.9	87.6	–	–	–	–
60"		44.3	59.8	–	–	–	–
36"	84"	100.0	130.0	106.7	140.0	100.0	130.0
42"		100.0	130.0	106.7	140.0	100.0	130.0
48"		100.0	130.0	–	–	–	–
54"		64.9	87.6	–	–	–	–
36"	89–1/4"	100.0	130.0	106.7	140.0	100.0	130.0
42"		100.0	130.0	–	–	100.0	130.0
48"		100.0	130.0	–	–	–	–
36"	90"	100.0	130.0	106.7	140.0	100.0	130.0
42"		100.0	130.0	–	–	100.0	130.0
48"		100.0	130.0	–	–	–	–
36"	96"	100.0	130.0	106.7	140.0	100.0	130.0
42"		100.0	130.0	–	–	100.0	130.0
48"		100.0	130.0	–	–	–	–

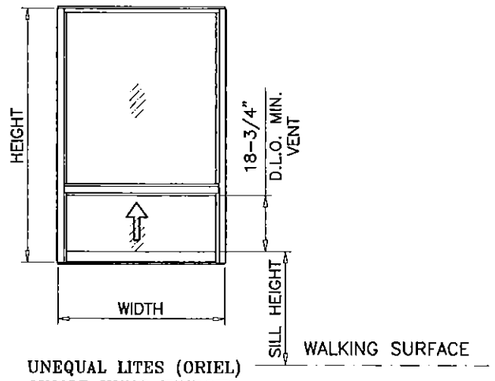

UNEQUAL LITES (ORIEL) SINGLE HUNG WINDOWS

(GLASS TYPES A, B & C)

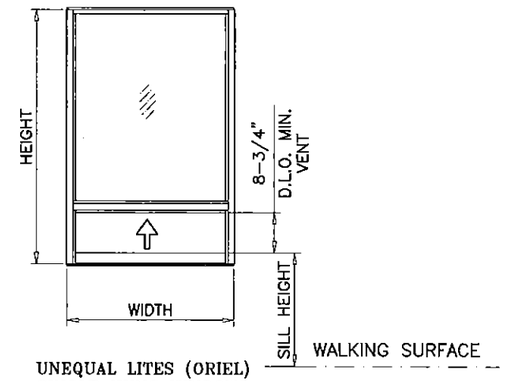

UNEQUAL LITES (ORIEL) SINGLE HUNG WINDOWS

(GLASS TYPE D)

NOTE:
GLASS CAPACITIES ON THIS SHEET ARE BASED ON ASTM E1300–09 (3 SEC. GUSTS) AND FLORIDA BUILDING COMMISSION DECLARATORY STATEMENT DCA05–DEC–219

PRODUCT RENEWED
as complying with the Florida
Building Code
Acceptance No 14-0923.06
Expiration Date 06/23/2020
By
Miami Dade Product Control

Engr: JAVAD AHMAD
CIVIL
FLA. PE # 70592
C.A.N. 3538
APR 09 2015

AL-FAROOQ CORPORATION
ENGINEERS & PRODUCT DEVELOPMENT
1235 S.W. 87 AVE
MIAMI, FLORIDA 33174
TEL. (305) 264-8100 FAX. (305) 262-6978

COMP–ANL\W03–111RC

SERIES 500Y ALUM SINGLE HUNG WINDOW (S.M.I.)

TECNOGLASS, LLC
10653 N.E. QUAYBRIDGE CT.
MIAMI, FL. 33138
TEL. (305) 342–0890 FAX. (305) 624–7767

revisions:

no	date	by	description
D	08.01.07		NO CHANGE THIS SHEET
E	11.11.09		UPDATED FOR 2007 FBC
F	06.07.10		NO CHANGE THIS SHEET
G	03.05.12		NO CHANGE THIS SHEET
H	04.08.15		UPDATED TO 2014 FBC

date: 12–11–03
scale: 1/2"=1'–0"
dr. by: HAMID
chk. by:

drawing no.
W03–111

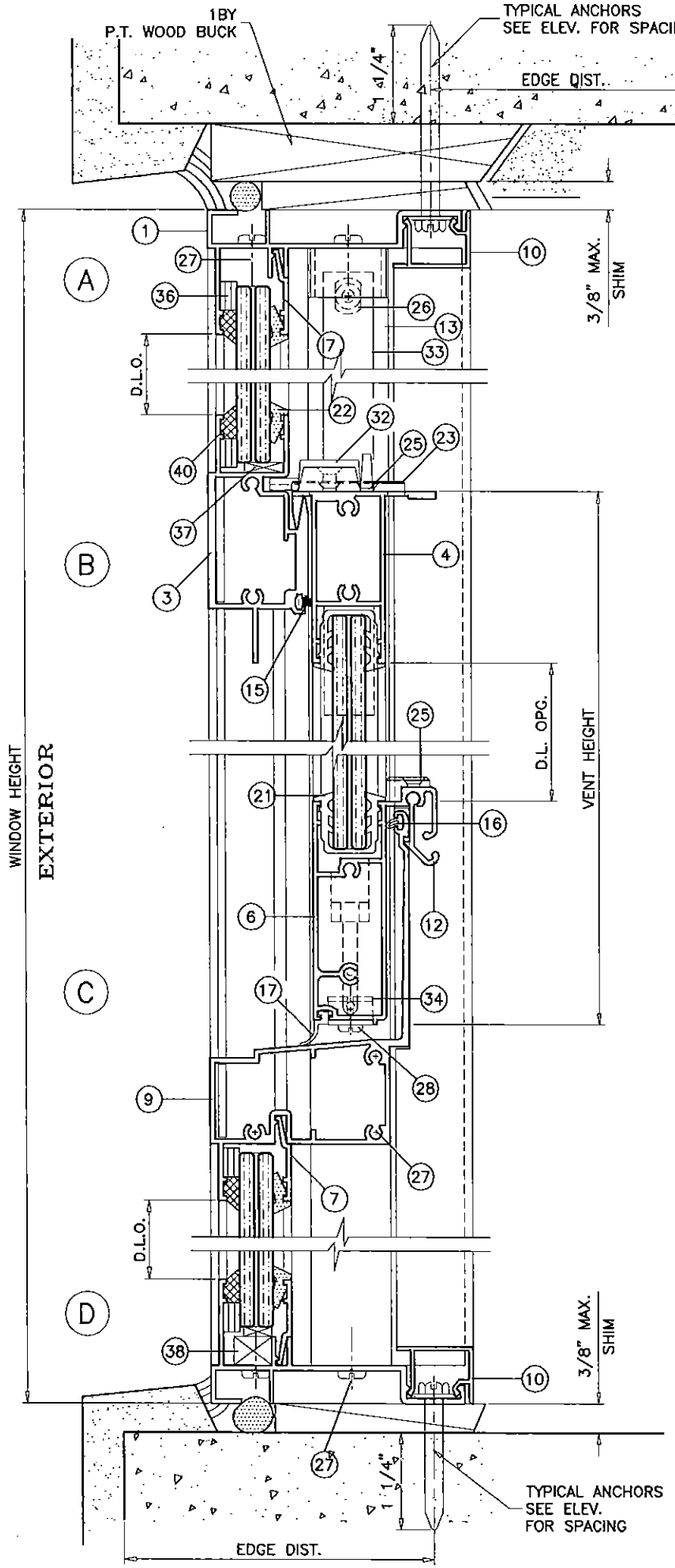

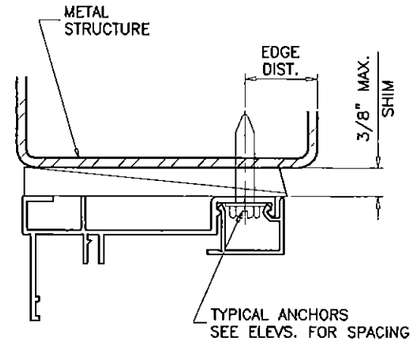

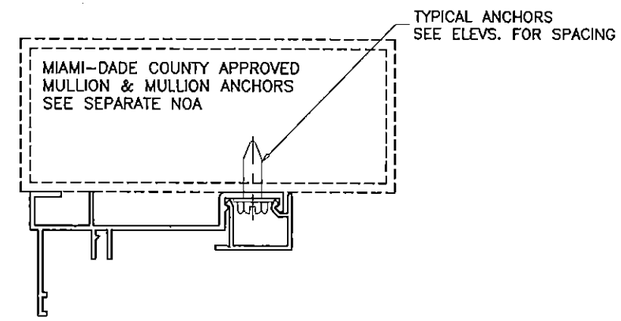

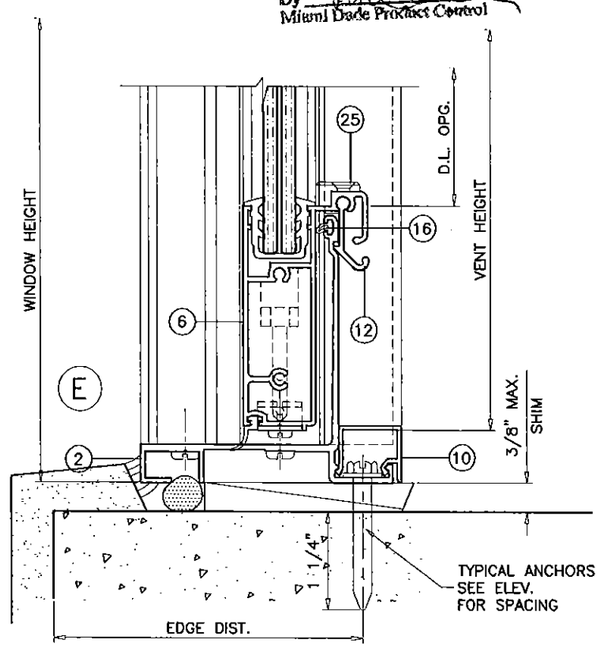

PRODUCT RENEWED
as complying with the Florida
Building Code
Acceptance No. 14-0923.06
Expiration Date 06/23/2020
By
Miami Dade Product Control

WOOD BUCKS AND METAL STRUCTURE NOT BY TECNOGLASS MUST SUSTAIN LOADS IMPOSED BY GLAZING SYSTEM AND TRANSFER THEM TO THE BUILDING STRUCTURE.

TYPICAL ANCHORS: SEE ELEV. FOR SPACING

TYPE 'A'– 1/4" HILTI KWIK-CON II (Fu=163 KSI, Fy=157 KSI)
INTO 2BY WOOD BUCKS OR WOOD STRUCTURES
1-1/2" MIN. PENETRATION INTO WOOD
THRU 1BY BUCKS INTO CONC. OR MASONRY
1-1/4" MIN. EMBED INTO CONC. OR MASONRY

TYPE 'B'– 1/4" HILTI KWIK-CON II (Fu=163 KSI, Fy=157 KSI)
DIRECTLY INTO CONCRETE
1-1/4" MIN. EMBED INTO CONCRETE
1-3/4" MIN. EMBED INTO CONCRETE AT MULLION CLIP ONLY

TYPE 'C'– 1/4" HILTI KWIK-FLEX SELF DRILLING SCREWS (Fu=92 KSI, Fy=120 KSI)
INTO MIAMI-DADE COUNTY APPROVED MULLIONS
INTO METAL STRUCTURES
STEEL : 1/8" THK. MIN. (Fy = 36 KSI MIN.)
ALUMINUM : 1/8" THK. MIN. (6063-T5 MIN.)
(STEEL IN CONTACT WITH ALUMINUM TO BE PLATED OR PAINTED)

ANCHOR EDGE DISTANCES

INTO WOOD STRUCTURE = 1" MIN.
INTO CONCRETE AND MASONRY = 2-1/2" MIN.
INTO METAL STRUCTURE = 3/4" MIN.

WOOD AT HEAD, SILL OR JAMBS SG = 0.55 MIN.
CONCRETE AT HEAD, SILL OR JAMBS f'c = 3000 PSI MIN.
C-90 HOLLOW/FILLED BLOCK AT JAMBS f'm = 1500 PSI MIN.

SEALANT:

ALL JOINTS AND FRAME CONNECTIONS SEALED WITH DOW CORNING 795 SEALANT.

Engr: JAVAD AHMAD
CIVIL
FLA. PE # 70592
C.A.N. 3538
APR 0 9 2015

AL-FAROOQ CORPORATION
ENGINEERS & PRODUCT DEVELOPMENT
1235 S.W. 87 AVE
MIAMI, FLORIDA 33174
TEL. (305) 264-8100 FAX. (305) 262-6978
COMP-ANL\W03-111RC

SERIES 500Y ALUM SINGLE HUNG WINDOW (S.M.I.)

TECNOGLASS, LLC
10653 N.E. QUAYBRIDGE CT.
MIAMI, FL. 33138
TEL. (305) 342-0890 FAX. (305) 624-7767

revisions:

no	date	by	description
D	08.01.07		NO CHANGE THIS SHEET
E	11.11.09		UPDATED FOR 2007 FBC
F	06.07.10		REV. PER BCCO COMMENTS
G	03.05.12		NO CHANGE THIS SHEET
H	04.08.15		UPDATED TO 2014 FBC

date: 12-11-03
scale: 1/2" = 1"
dr. by: HAMID
chk. by:

drawing no.
W03-111

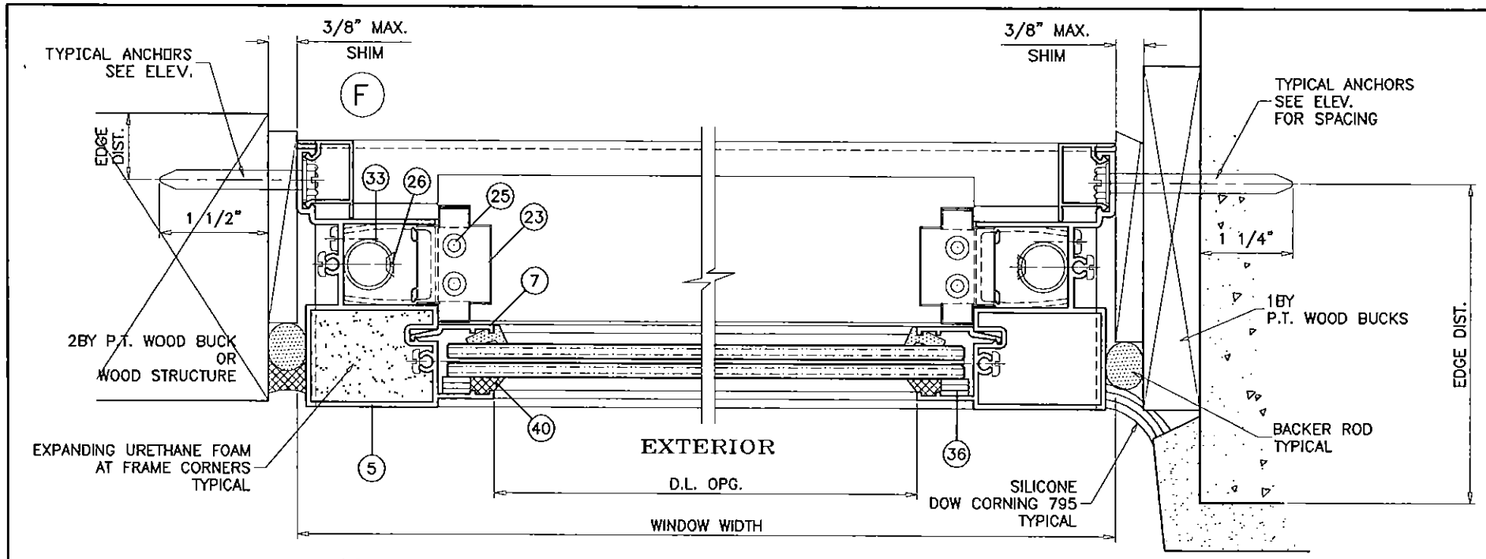

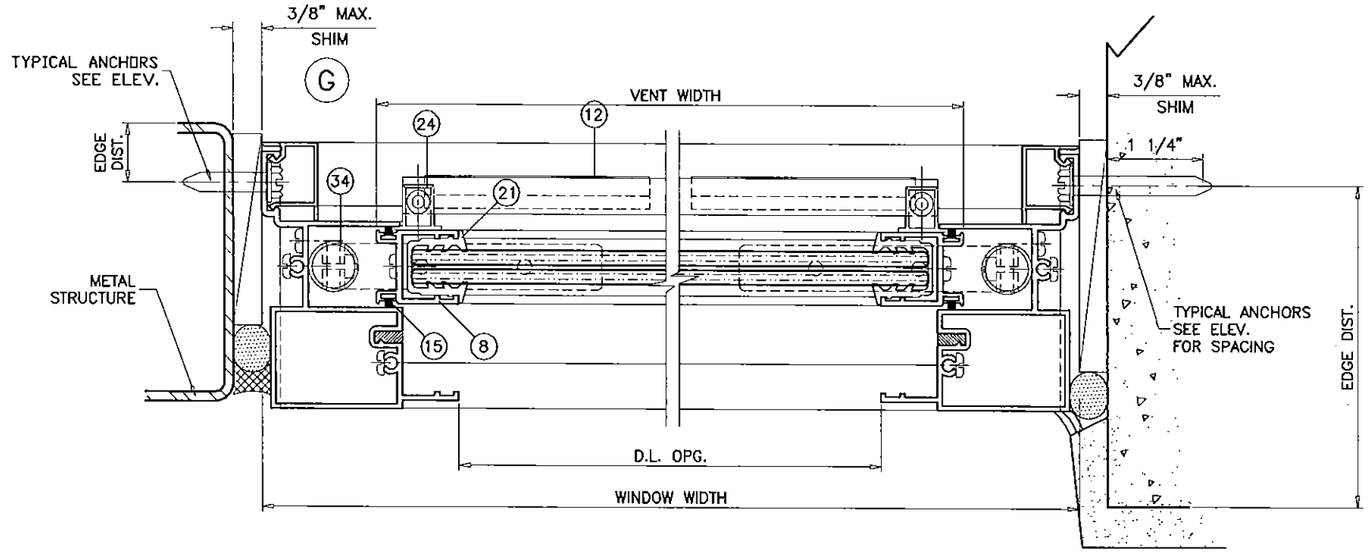

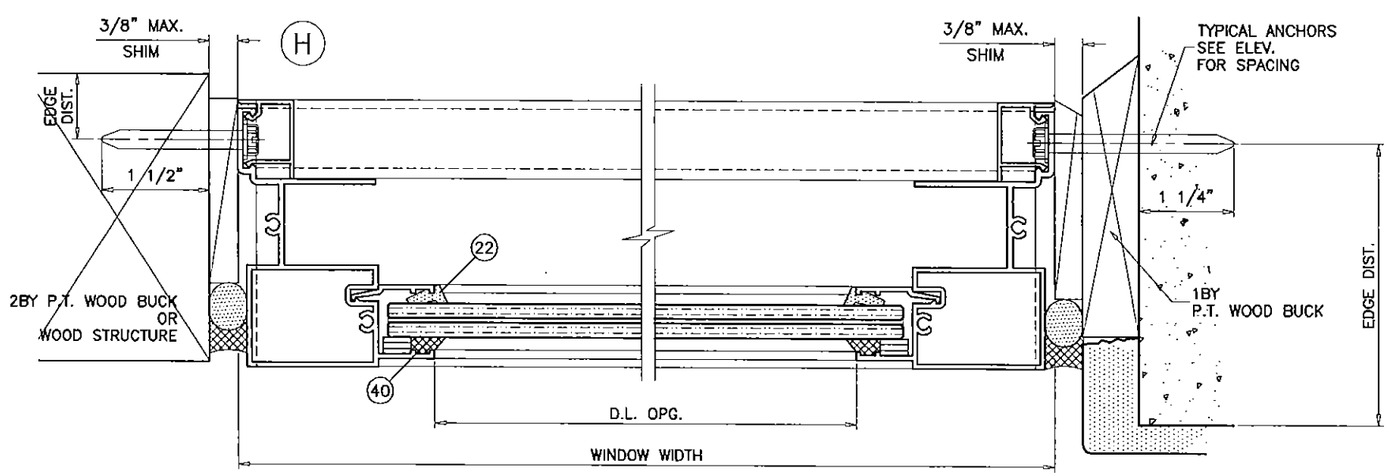

PRODUCT RENEWED
as complying with the Florida
Building Code
Acceptance No 14-0923.06
Expiration Date 06/23/2020
By
Miami Dade Product Control

Engr: JAVAD AHMAD
CML
FLA. PE # 70592
C.A.N. 3538
APR 01 2015

AL-FAROOQ CORPORATION
ENGINEERS & PRODUCT DEVELOPMENT
1235 S.W. 87 AVE
MIAMI, FLORIDA 33174
TEL (305) 264-8100 FAX. (305) 262-6978
COMP-ANL\W03-111RC

SERIES 500Y ALUM SINGLE HUNG WINDOW (S.M.I.)

TECNOGLASS, LLC
10653 N.E. QUAYBRIDGE CT.
MIAMI, FL. 33138
TEL. (305) 342-0890 FAX. (305) 624-7767

revisions:

no	date	by	description
D	08.01.07		NO CHANGE THIS SHEET
E	11.11.09		NO CHANGE THIS SHEET
F	06.07.10		REV. PER BCCO COMMENTS
G	03.05.12		NO CHANGE THIS SHEET
H	04.08.15		UPDATED TO 2014 FBC

date: 12-11-03
scale: 1/2" = 1"
dr. by: HAMID
chk. by:

drawing no.
W03-111

WINDOWALL BOTTOM LITE CAPACITY			
DESIGN LOAD CAPACITY – PSF			
WINDOW DIMS.		GLASS TYPE 'A' 'B' 'C' & 'D'	
WIDTH	HEIGHT	EXT.(+)	INT.(–)
24"	38–3/8"	100.0	130.0
30"		100.0	130.0
36"		100.0	130.0
42"		100.0	130.0
48"		100.0	130.0
24"	42"	100.0	130.0
30"		100.0	130.0
36"		100.0	130.0
42"		91.5	119.0
24"	48"	100.0	130.0
30"		100.0	130.0
36"		100.0	130.0

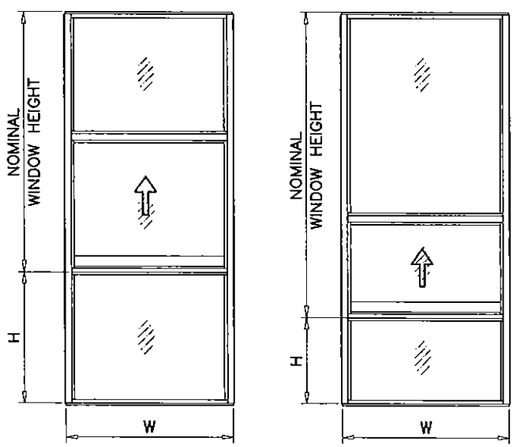

SINGLE HUNG OVER FIXED WINDOWS

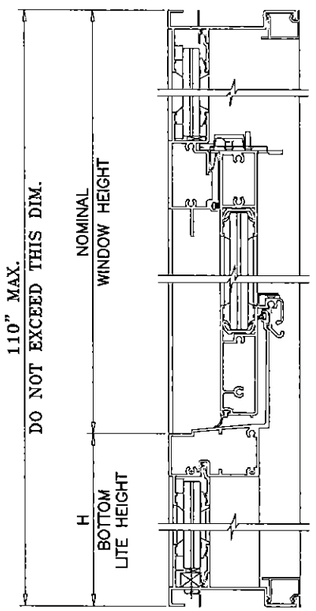

REFER TO SHEETS 3 & 4 TO OBTAIN CAPACITY OF WINDOW PORTION FOR CONFIGURATION/GLASS USED.

REFER TO CHART ABOVE TO OBTAIN CAPACITY OF BOTTOM LITE OF WINDOWALL.

REFER TO CHARTS AT RIGHT OF THIS PAGE TO OBTAIN MULLION CAPACITY.

USE LOWEST VALUES OF OPTIONS CONSULTED.

MULLION CAPACITY CHART – PSF			
WINDOW DIMS.		STD. MULLION UNREINFORCED	
WIDTH (W)	MULL SPAN	EXT.(+)	INT.(–)
36"	48"	100.0	130.0
42"		100.0	130.0
48"		100.0	130.0
54"		100.0	130.0
60"		100.0	130.0
66"		100.0	130.0
72"		100.0	130.0
36"	54"	100.0	130.0
42"		100.0	130.0
48"		100.0	130.0
54"		100.0	130.0
60"		100.0	130.0
36"	60"	100.0	130.0
42"		100.0	130.0
48"		100.0	130.0
54"		100.0	130.0
36"	66"	100.0	130.0
42"		100.0	130.0
48"		100.0	130.0
36"	72"	100.0	130.0
42"		100.0	130.0
48"		100.0	130.0

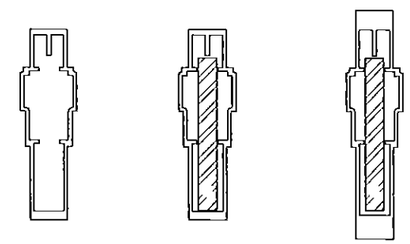

STD. MULLION UNREINFORCED | STD. MULLION REINFORCED | H.D. MULLION REINFORCED

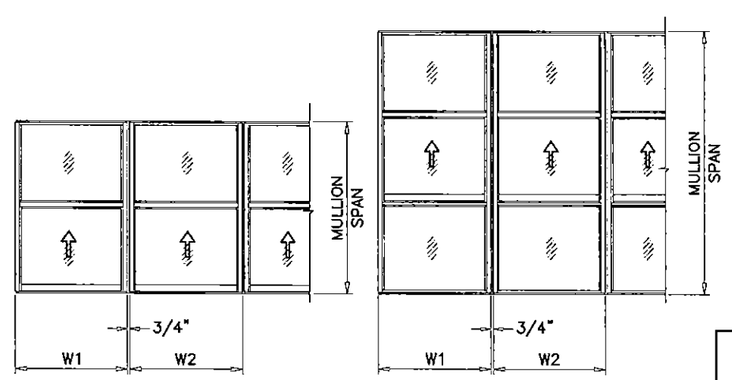

$$\text{WIDTH (W)} = \frac{W1 + W2}{2} + 3/4"$$

MULLION CAPACITY CHART – PSF					
WINDOW DIMS.		STD. MULLION REINFORCED		H.D. MULLION REINFORCED	
WIDTH (W)	MULL SPAN	EXT.(+)	INT.(–)	EXT.(+)	INT.(–)
36"	66"	100.0	130.0	100.0	130.0
42"		100.0	130.0	100.0	130.0
48"		100.0	130.0	100.0	130.0
54"		100.0	130.0	100.0	130.0
60"		100.0	130.0	100.0	130.0
66"		100.0	130.0	100.0	130.0
72"		100.0	130.0	100.0	130.0
36"	72"	100.0	130.0	100.0	130.0
42"		100.0	130.0	100.0	130.0
48"		100.0	130.0	100.0	130.0
54"		100.0	130.0	100.0	130.0
60"		100.0	130.0	100.0	130.0
66"		100.0	130.0	100.0	130.0
72"		100.0	130.0	100.0	130.0
36"	78"	100.0	130.0	100.0	130.0
42"		100.0	130.0	100.0	130.0
48"		100.0	130.0	100.0	130.0
54"		100.0	130.0	100.0	130.0
60"		100.0	130.0	100.0	130.0
66"		100.0	130.0	100.0	130.0
36"	84"	100.0	130.0	100.0	130.0
42"		100.0	130.0	100.0	130.0
48"		100.0	130.0	100.0	130.0
54"		100.0	130.0	100.0	130.0
60"		100.0	130.0	100.0	130.0
36"	90"	100.0	130.0	100.0	130.0
42"		100.0	130.0	100.0	130.0
48"		100.0	130.0	100.0	130.0
54"		100.0	130.0	100.0	130.0
36"	96"	100.0	130.0	100.0	130.0
42"		100.0	130.0	100.0	130.0
48"		100.0	130.0	100.0	130.0
54"		100.0	116.1	100.0	130.0
36"	108"	100.0	130.0	100.0	130.0
42"		100.0	117.9	100.0	130.0
48"		100.0	103.2	100.0	130.0
36"	110"	100.0	130.0	100.0	130.0
42"		100.0	113.7	100.0	130.0
48"		99.4	99.4	100.0	130.0

PRODUCT RENEWED
as complying with the Florida
Building Code
Acceptance No 14-0923.06
Expiration Date 06/23/2020
By
Miami Dade Product Control

Engr: JAVAD AHMAD
CML
FLA. PE # 70592
C.A.N. 3538
APR 09 2015

AL-FAROOQ CORPORATION
ENGINEERS & PRODUCT DEVELOPMENT
1235 S.W. 87 AVE
MIAMI, FLORIDA 33174
TEL. (305) 264-8100 FAX. (305) 262-6978
COMP–ANL\W03–111RC

SERIES 500Y ALUM SINGLE HUNG WINDOW (S.M.I.)

TECNOGLASS, LLC
10653 N.E. QUAYBRIDGE CT.
MIAMI, FL. 33138
TEL. (305) 342–0890 FAX. (305) 624–7767

revisions:

no	date	by	description
D	08.01.07		REV. PER BCCO COMMENTS
E	11.11.09		NO CHANGE THIS SHEET
F	06.07.10		NO CHANGE THIS SHEET
G	03.05.12		NO CHANGE THIS SHEET
H	04.08.15		UPDATED TO 2014 FBC

date: 12–11–03
scale: 1/2" = 1"
dr. by: HAMID
chk. by:

drawing no.
W03–111

sheet 7 of 10

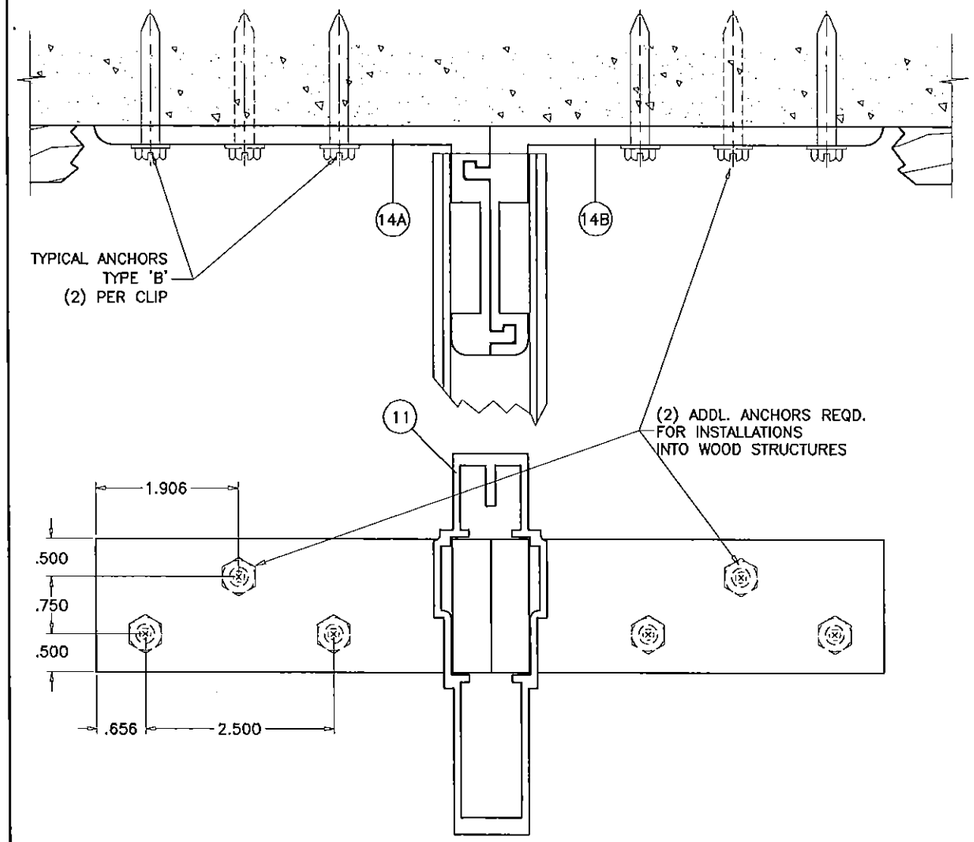

MULLION CONNECTION AT HEAD & SILL

OPTION 1

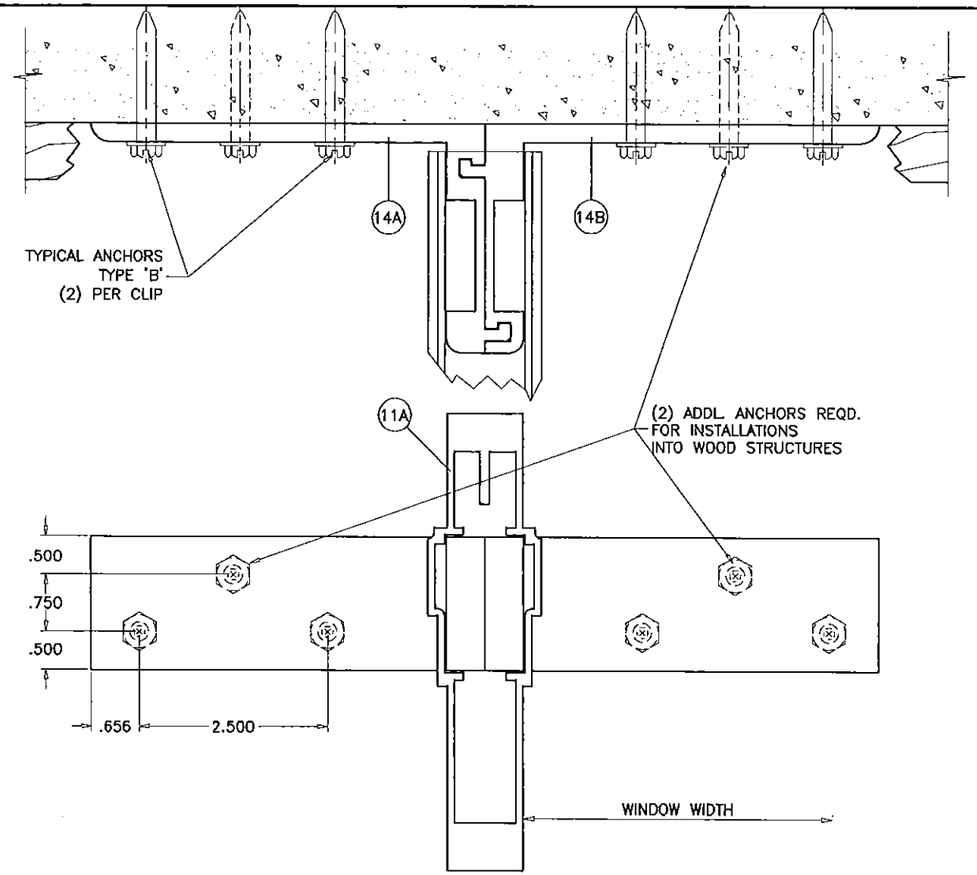

MULLION CONNECTION AT HEAD & SILL

OPTION 2

PRODUCT RENEWED
as complying with the Florida
Building Code
Acceptance No 14-0923.06
Expiration Date 06/23/2020
By
Miami Dade Product Control

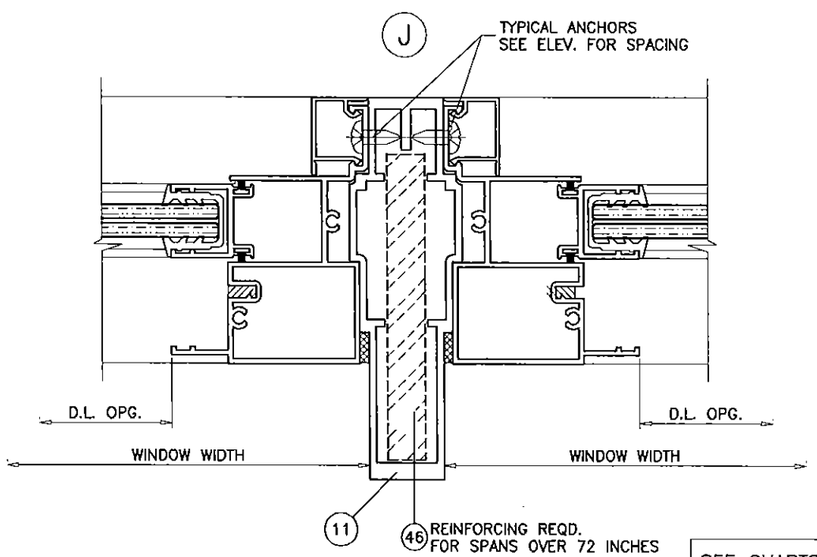

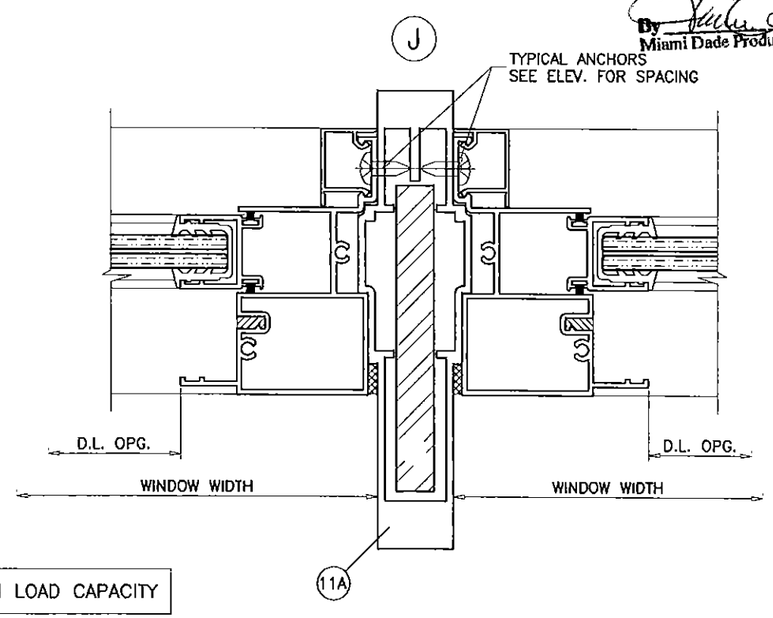

SEE CHARTS ON SHEET 6 FOR MULLION LOAD CAPACITY

Engr: JAVAD AHMAD
CIVIL
FLA. PE # 70592
C.A.N. 3538
APR 09 2015

AL-FAROOQ CORPORATION
ENGINEERS & PRODUCT DEVELOPMENT
1235 S.W. 87 AVE
MIAMI, FLORIDA 33174
TEL. (305) 264-8100 FAX. (305) 262-6978
COMP-ANL\W03-111RC

SERIES 500Y ALUM SINGLE HUNG WINDOW (S.M.I.)

TECNOGLASS, LLC
10653 N.E. QUAYBRIDGE CT.
MIAMI, FL. 33138
TEL. (305) 342-0890 FAX. (305) 624-7767

revisions:

no	date	by	description
D	08.01.07		NO CHANGE THIS SHEET
E	11.11.09		NO CHANGE THIS SHEET
F	06.07.10		REV. PER BCCO COMMENTS
G	03.05.12		NO CHANGE THIS SHEET
H	04.08.15		UPDATED TO 2014 FBC

date: 12-11-03
scale: 1/2" = 1"
dr. by: HAMID
chk. by:

drawing no.
W03-111

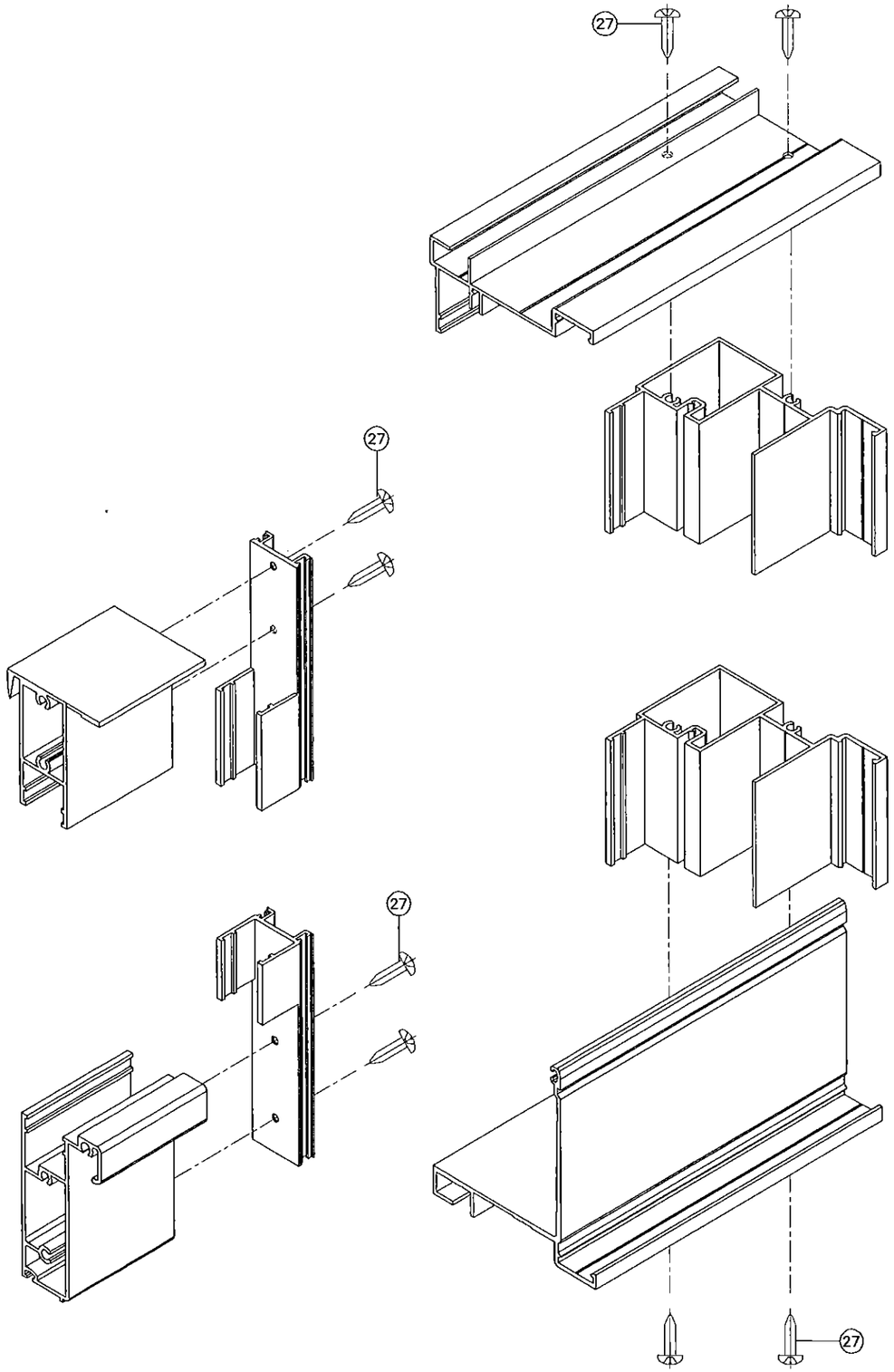

VENT CORNER DETAIL

FRAME CORNERS DETAIL

ITEM #	PART #	REQD.	DESCRIPTION	MATERIAL	MANF./SUPPLIER/REMARKS
1	500Y-001	AS REQD.	HEAD & FIXED SILL	6063-T6	AT FRAME
2	500Y-002	AS REQD.	FRAME SILL	–	AT FRAME
3	500Y-003	1	MEETING RAIL	6005-T5	AT FRAME
4	500Y-004	1	VENT TOP	6005-T5	SASH VENT
5	500Y-005	2	JAMB	6063-T6	AT FRAME
6	500Y-006	1	VENT BOTTOM	6063-T6	SASH VENT
7	500Y-007	AS REQD.	GLAZING BEAD	6063-T6	AT FIXED GLASS
8	500Y-008	2	VENT SIDE	6063-T6	SASH VENT
9	500Y-009	AS REQD.	SILL MEETING RAIL	6005-T5	AT FRAME
10	500Y-010	AS REQD.	TRACK COVER (OPTIONAL)	6063-T6	AT FRAME
11	500Y-023	AS REQD.	STD. MULLION	6063-T6	AT FRAME
11A	500Y-029	AS REQD.	H.D. MULLION	6063-T6	AT FRAME
12	500Y-012	2/VENT	HANDICAP FINGER LOCK	6063-T6	SASH VENT
13	500Y-013	1	VENT STOP	6063-T6	AT TOP OF FRAME
14A	500Y-024	AS REQD.	FEMALE ANCHOR CLIP	6063-T6	TOP & BOTTOM OF MULL
14B	500Y-025	AS REQD.	MALE ANCHOR CLIP	6063-T6	TOP & BOTTOM OF MULL
15	W33261NK	AS REQD.	WEATHERSTRIPPING PILE	–	AT VENT SIDE MEETING RAIL
16	WV-3189	AS REQD.	W'STIPPING GASKET (DUROMETER 65 SHORE A)	VINYL	SILL & SILL MEETING RAIL
17	V-048	AS REQD.	W'STRIPPING GASKET (DUROMETER 60±5 SHORE A)	NEOPRENE	BOTTOM OF SASH VENT
21	V-052	–	GLAZING GASKET (DUROMETER 75 SHORE A)	VINYL	–
21A	V-049	–	GLAZING GASKET (DUROMETER 75 SHORE A)	VINYL	–
22	V-053	–	GLAZING WEDGE (DUROMETER 70±5 SHORE A)	VINYL	–
23	P-012	2/ VENT	VENT TOP GUIDE PLASTIC M&M (ROCKWELL R 110)	NYLON	TOP OF SASH VENT
24	P-013	2/ VENT	VENT BOTTOM GUIDE PLASTIC M&M (ROCKWELL R 110)	NYLON	BOTTOM OF SASH VENT
25	–	AS REQD.	#8 X 3/8" LG. FH. SMS. ST/ST PHILLIPS	–	AT P-012, P-013 & PD-203
26	–	2	#8 X 1" LG. FH. SMS. ST/ST PHILLIPS	–	AT TOP OF BALANCE
27	–	AS REQD.	#10 X 1" LG. PH. SMS. ST/ST PHILLIPS	–	ASSEMBLY SCREWS
28	–	6	#10 X 3/4" LG. PH. SMS. ST/ST PHILLIPS	–	AT BALANCE CLIP
29	–	–	–	–	–
32	PD-203	2/ WDW	SASH LOCK	–	AT TOP OF SASH
33	–	2/ WDW	ULTRA-LIFT BALANCE #30	–	AT FRAME
34	–	2/ WDW	ULTRA-LIFT NON TILT BRACKET	–	–
36	–	–	1/4" X 1/2" FOAM TAPE SINGLE FACE	–	–
37	–	–	1/8" X 1/2" X 4" LG. SETTING BLOCK	NEOPRENE	DUROMETER 85±5 SHORE A
38	–	–	3/8" X 1/2" X 4" LG. SETTING BLOCK	NEOPRENE	DUROMETER 85±5 SHORE A
40	DC-795	–	GLAZING COMPOUND	SILICONE	–
42	–	–	–	–	–
46	–	AS REQD.	1/2" X 4" X 104" LG. STEEL.	–	AT MULLION

PRODUCT RENEWED
as complying with the Florida
Building Code
Acceptance No 14-0923.06
Expiration Date 06/23/2020
By
Miami Dade Product Control

Engr: JAVAD AHMAD
CIVIL
FLA. PE # 70592
C.A.N. 3538
APR 2015

AL-FAROOQ CORPORATION
ENGINEERS & PRODUCT DEVELOPMENT
1235 S.W. 87 AVE
MIAMI, FLORIDA 33174
TEL. (305) 264-8100 FAX. (305) 262-6978

COMP-ANL\W03-111RC

SERIES 500Y ALUM SINGLE HUNG WINDOW (S.M.I.)

TECNOGLASS, LLC
10653 N.E. QUAYBRIDGE CT.
MIAMI, FL. 33138
TEL (305) 342-0890 FAX. (305) 624-7767

revisions:

no	date	by	description
D	08.01.07		NO CHANGE THIS SHEET
E	11.11.09		NO CHANGE THIS SHEET
F	06.07.10		REV. PER BCCO COMMENTS
G	03.05.12		NO CHANGE THIS SHEET
H	04.08.15		UPDATED TO 2014 FBC

date: 12-11-03
scale: 1/2" = 1"
dr. by: HAMID
chk. by:

drawing no.
W03-111

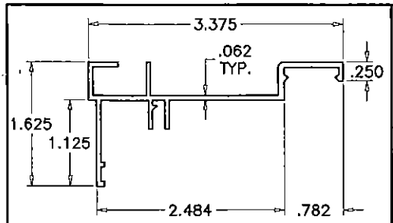

1 FRAME HEAD/SILL

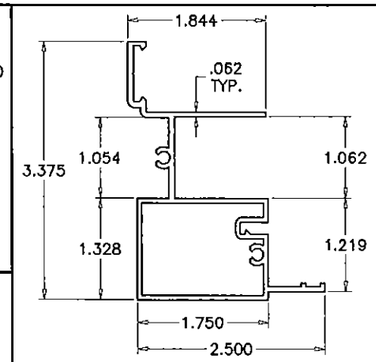

5 FRAME JAMB

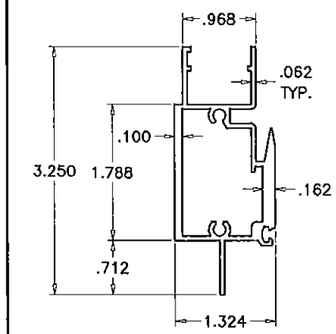

3 MEETING RAIL

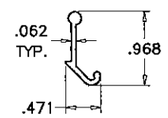

12 VENT LATCH

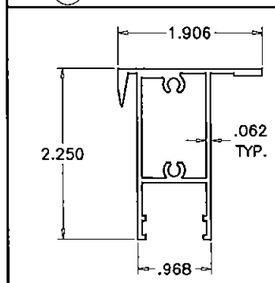

4 VENT TOP RAIL

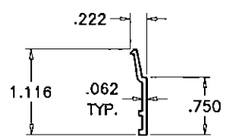

7 GLAZING BEAD

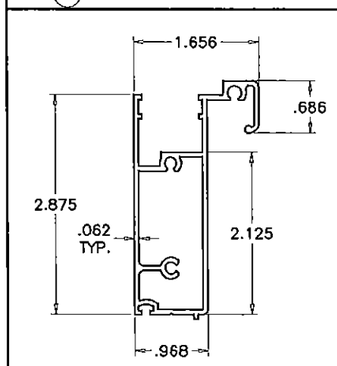

6 VENT BOTTOM RAIL

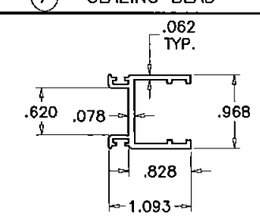

8 VENT SIDE RAIL

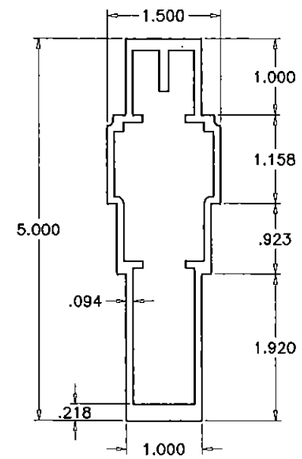

11 STD. MULLION

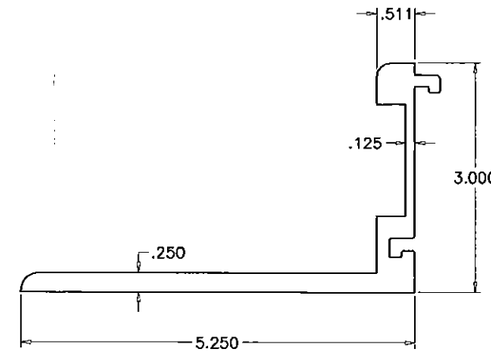

14A FEMALE ANCHOR CLIP

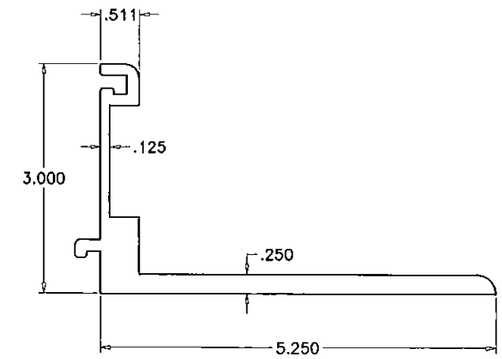

14B MALE ANCHOR CLIP

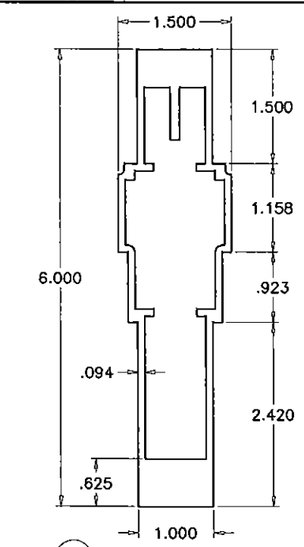

11A H.D. MULLION

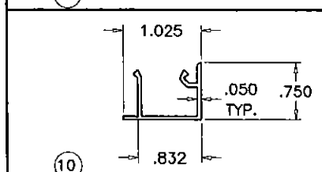

10 INSTALLATION TRACK COVER

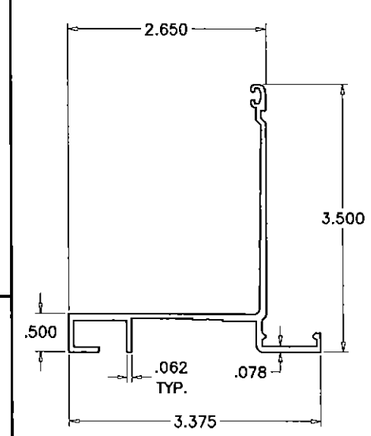

2 FRAME SILL

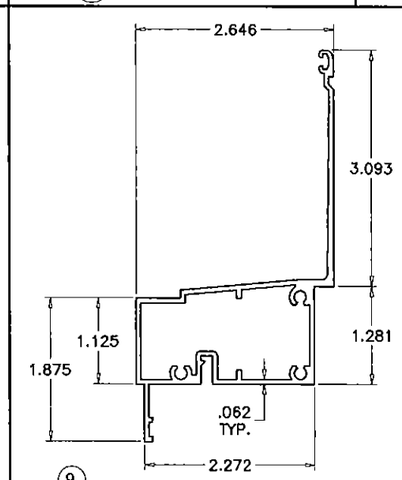

9 SILL MTG. RAIL W/ FIXED BOTTOM

PRODUCT RENEWED
as complying with the Florida
Building Code
Acceptance No 14-0923.06
Expiration Date 06/23/2020
By
Miami Dade Product Control

Engr: JAVAD AHMAD
CIVIL
FLA. PE # 70592
C.A.N. 3538
APR 09 2015

AL-FAROOQ CORPORATION
ENGINEERS & PRODUCT DEVELOPMENT
1235 S.W. 87 AVE
MIAMI, FLORIDA 33174
TEL. (305) 264-8100 FAX. (305) 262-6978
COMP-ANL\W03-111RC

SERIES 500Y ALUM SINGLE HUNG WINDOW (S.M.I.)

TECNOGLASS, LLC
10653 N.E. QUAYBRIDGE CT.
MIAMI, FL. 33138
TEL. (305) 342-0890 FAX. (305) 624-7767

revisions:

no	date	by	description
D	08.01.07		NO CHANGE THIS SHEET
E	11.11.09		NO CHANGE THIS SHEET
F	06.07.10		NO CHANGE THIS SHEET
G	03.05.12		NO CHANGE THIS SHEET
H	04.08.15		UPDATED TO 2014 FBC

date: 12-11-03
scale: 1/2" = 1"
dr. by: HAMID
chk. by:

drawing no.
W03-111

sheet 10 of 10