MIAMI-DADE COUNTY
DEPARTMENT OF REGULATORY AND ECONOMIC RESOURCES (RER)
BOARD AND CODE ADMINISTRATION DIVISION

MIAMI-DADE COUNTY
PRODUCT CONTROL SECTION
11805 SW 26 Street, Room 208
T (786) 315-2590 F (786) 315-2599
www.miamidade.gov/economy

NOTICE OF ACCEPTANCE (NOA)

Sabic Innovative dba Insulgard Security Products
1291 Rickett Road
Brighton, MI 48116

SCOPE:

This NOA is being issued under the applicable rules and regulations governing the use of construction materials. The documentation submitted has been reviewed and accepted by Miami-Dade County RER - Product Control Section to be used in Miami Dade County and other areas where allowed by the Authority Having Jurisdiction (AHJ).

This NOA shall not be valid after the expiration date stated below. The Miami-Dade County Product Control Section (In Miami Dade County) and/or the AHJ (in areas other than Miami Dade County) reserve the right to have this product or material tested for quality assurance purposes. If this product or material fails to perform in the accepted manner, the manufacturer will incur the expense of such testing and the AHJ may immediately revoke, modify, or suspend the use of such product or material within their jurisdiction. RER reserves the right to revoke this acceptance, if it is determined by Miami-Dade County Product Control Section that this product or material fails to meet the requirements of the applicable building code.

This product is approved as described herein, and has been designed to comply with the Florida Building Code, including the High Velocity Hurricane Zone.

DESCRIPTION: Series "44/300 DC" Aluminum Fixed Window - L.M.I.

APPROVAL DOCUMENT: Drawing No. **DCS-02**, titled "44/300 DC Framing System", sheets 1 through 19 of 19, dated 08/06/09, with revision #5 dated 03/16/15, prepared by manufacturer, signed and sealed by Michael N. Kourinos, P.E. of Triteq, Inc., bearing the Miami–Dade County Product Control Revision stamp with the Notice of Acceptance number and expiration date by the Miami-Dade County Product Control Section.

MISSILE IMPACT RATING: Large and Small Missile Impact Resistant

LABELING: Each unit shall bear a permanent label with the manufacturer's name or logo, city, state, model/series, and following statement: "Miami-Dade County Product Control Approved", unless otherwise noted herein.

RENEWAL of this NOA shall be considered after a renewal application has been filed and there has been no change in the applicable building code negatively affecting the performance of this product.

TERMINATION of this NOA will occur after the expiration date or if there has been a revision or change in the materials, use, and/or manufacture of the product or process. Misuse of this NOA as an endorsement of any product, for sales, advertising or any other purposes shall automatically terminate this NOA. Failure to comply with any section of this NOA shall be cause for termination and removal of NOA.

ADVERTISEMENT: The NOA number preceded by the words Miami-Dade County, Florida, and followed by the expiration date may be displayed in advertising literature. If any portion of the NOA is displayed, then it shall be done in its entirety.

INSPECTION: A copy of this entire NOA shall be provided to the user by the manufacturer or its distributors and shall be available for inspection at the job site at the request of the Building Official.

This NOA **revises and renews NOA# 12-0913.08** and consists of this page 1 and evidence pages E-1 and E-2, as well as approval document mentioned above.

The submitted documentation was reviewed by **Jaime D. Gascon, P.E.**

MIAMI-DADE COUNTY APPROVED

J Gascon
3/27/15

Sabic Innovative dba Insulgard Security Products

NOTICE OF ACCEPTANCE: EVIDENCE SUBMITTED

A. DRAWINGS

1. Manufacturer's die drawings and sections.
2. Drawing No. **DCS-02**, titled "44/300 DC Framing System", sheets 1 through 19 of 19, dated 08/06/09, with revision #5 dated 03/16/15, prepared by manufacturer, signed and sealed by Michael N. Kourinos, P.E. of Triteq, Inc.

B. TESTS

1. Test reports on: 1) Air Infiltration Test, per FBC, TAS 202–94
   2) Uniform Static Air Pressure Test, Loading per FBC TAS 202–94
   3) Water Resistance Test, per FBC, TAS 202–94
   4) Large Missile Impact Test per FBC, TAS 201–94
   5) Cyclic Wind Pressure Loading per FBC, TAS 203–94
   6) Forced Entry Test, per FBC 2411 3.2.1, TAS 202–94

   along with marked–up drawings and installation diagram of fixed window, prepared by Architectural Testing, Inc. Test Report No. **ATI 89734.01–109–18**, dated 04/22 and 12/03/09, signed and sealed by Michael D. Stremmel, P.E.
   (Submitted under previous NOA# 12-0913.08)
2. DS Brown Parts No. **G001, G005 and 40–5007–29** neoprene's exterior glazing gaskets and setting blocks complying with the following:
   a) ASTM C864 Specification for Dense Elastomeric Compression Seal Gaskets, Setting Blocks, and Spacers with Option II exceptions.
   b) ASTM D412C Standard Test Methods for Vulcanized Rubber and Thermoplastic Elastomers— Tensile Test 30HRS passed 2350 PSI and 2130PSI.
   c) ASTM D395B Test Methods for Rubber Property—Compression Set for 22 HRS 100°F passed 21 % and 28% $\leq$ 30%.
   d) ASTM D 624C Test Method for Tear Strength of Conventional Vulcanized Rubber and Thermoplastic Elastomers of 181 lb/in $\geq$ 100 lb/ in.
   e) ASTM D573 Heat Resistance 70 HR/ 100°C passed: Tensile -1% $\leq$ 15%, Elongation -38% $\leq$ 40%, Hardness 8 $\leq$ 10 and 7PSI $\leq$ 10PSI
   f) ASTM D2240 Shore A Hardness passed 76A $\leq$ 80 ($\pm$5) durometer
   g) ASTM D1149 Ozone Resistance 100 HR/ 40°F/ 20% strain/ 100 pphm No Cracks.
   h) ASTM D746/ C509 Low Temperature Brittleness at - 40°C passed NO Cracks.
   i) ASTM D925 Migration Staining 7 day's exposure passed None Migration.
   j) ASTM D1025 Compression Deflection Stress at 25 % 27 Psi $\geq$ 13–24 PSI.
   k) ASTM C509 Dimensional Stability 70 HRS/ 100°C passed: Length -1% $\leq$ 4% and Width -1% $\leq$ 4%.
   l) ASTM 1083 Water absorption 24 HRS/ 24°C passed 2.1% < 5.0%

   along with marked–up drawings and installation diagram of neoprene's wedge, sponge and setting blocks, prepared by Smithers Scientific Services, Inc., Test Report No. **SMITHERS 098–19209R**, dated October 14, 2009, signed by Jeffrey J. Wible and by Bruce D. Lambillotte (A2LA No.'s 0363.01 and 0363.02).
   (Submitted under previous NOA# 12-0913.08)

Jaime D. Gascon, P.E.
Product Control Section Supervisor
NOA No. 14-0930.20
Expiration Date: December 30, 2019
Approval Date: April 09, 2015

NOTICE OF ACCEPTANCE: EVIDENCE SUBMITTED

C. CALCULATIONS

1. Anchor verification calculations and structural analysis, complying with **FBC-5th Edition (2014)**, dated 09/19/14, prepared by Triteq, Inc., signed and sealed by Justin Majzel, P.E.
2. Glazing complies with **ASTM E1300-04/09**

D. QUALITY ASSURANCE

1. Miami-Dade Department of Regulatory and Economic Resources (RER)

E. MATERIAL CERTIFICATIONS

1. Notice of Acceptance No. **14–0423.17** issued to **Eastman Chemical Company (MA)** for their "**Saflex Clear and Color Glass Interlayers**" dated 0619/14, expiring on 05/21/16.
2. Notice of Acceptance No. **13–0717.01** issued to **Sabic Innovative Plastics** for their **"Lexan® Polycarbonate Sheet Products"**, dated November 28, 2013, expiring on July 17, 2018

F. STATEMENTS

1. Statement letter of conformance, complying with **FBC--5th Edition (2014)**, dated September 19, 2014, issued by Triteq, Inc., signed and sealed by Justin Majzel, P.E.
2. Statement letter of no financial interest, dated September 19, 2014, issued by Triteq, Inc., signed and sealed by Justin Majzel, P.E.
3. Statement letter of conformance, complying with **FBC-2010**, dated February 05, 2013, prepared by Triteq, Inc., signed and sealed by Justin Majzel, P.E. ***(Submitted under previous NOA# 12-0913.08)***
4. Laboratory compliance letter for Test Report No. **ATI 89734.01–109–18**, issued by Architectural Testing, Inc., dated April 22, 2009, signed and sealed by Michael D. Stremmel, P.E. ***(Submitted under previous NOA# 12-0913.08)***
5. Laboratory addendum letter for Test Report No. **ATI 89734.01–109–18**, issued by Architectural Testing, Inc., dated August 12, 2009, signed and sealed by Michael D. Stremmel, P.E. ***(Submitted under previous NOA# 12-0913.08)***
6. Laboratory addendum letter for Test Report No. **ATI 89734.01–109–18**, issued by Architectural Testing, Inc., dated November 11, 2009, signed and sealed by Michael D. Stremmel, P.E. ***(Submitted under previous NOA# 12-0913.08)***

G. OTHER

1. Notice of Acceptance No. **12-0913.08**, issued to Sabic Innovative dba Insulgard Security Products for their Series "44/300 DC" Aluminum Fixed Window – L.M.I., approved on 05/16/13 and expiring on 12/30/14.

Jaime D. Gascon, P.E.
Product Control Section Supervisor
NOA No. 14-0930.20
Expiration Date: December 30, 2019
Approval Date: April 09, 2015

44/300 DC FRAMING SYSTEM

MIAMI - DADE COUNTY

INDEX SHEET

SHEET	DESCRIPTION
1	COVER/INDEX SHEET
2	GENERAL NOTES
3	STEEL TUBE SUBSTRATE – ELEVATION
4	STEEL TUBE SUBSTRATE – HEAD AND SILL DETAILS
5	STEEL TUBE SUBSTRATE – JAMB DETAILS
6	ALL SUBSTRATES – MULLION DETAIL, GLAZING ASSEMBLY & CORNER ANGLE DETAIL
7	STEEL STUD SUBSTRATE – ELEVATION
8	STEEL STUD SUBSTRATE – HEAD AND SILL DETAILS
9	STEEL STUD SUBSTRATE – JAMB DETAILS
10	CMU PANEL SUBSTRATE – ELEVATION
11	CMU PANEL SUBSTRATE – HEAD AND SILL DETAILS
12	CMU PANEL SUBSTRATE – JAMB DETAILS
13	PRE-CAST PANEL SUBSTRATE – ELEVATION
14	PRE-CAST PANEL SUBSTRATE – HEAD AND SILL DETAILS
15	PRE-CAST PANEL SUBSTRATE – JAMB DETAILS
16	WOOD STUD SUBSTRATE – ELEVATION
17	WOOD STUD PANEL SUBSTRATE – HEAD AND SILL DETAILS
18	WOOD STUD PANEL SUBSTRATE – JAMB DETAILS
19	EXTRUSION DETAILS

STRUCTURAL ENGINEER

Michael Kourinos, P.E.
Florida License No. 78063
Expiration Date: Feb. 28, 2017

TRITEQ, Inc.
12300 Old Tesson Rd, Suite 300B
St. Louis, MO 63128

Certificate of Authority No. 27425

STRUCTURAL ENGINEER STAMP

MICHAEL N. KOURINOS
LICENSE
No 78063
STATE OF
FLORIDA
PROFESSIONAL ENGINEER

3/23/2017

DADE COUNTY STAMP

PRODUCT REVISED
as complying with the Florida Building Code
Acceptance No 14-0930.20
Expiration Date 12/30/19
By
Miami-Dade Product Control

03.16.15 REV BLOCK

REVISIONS: NO.	DATE	DESCRIPTION
1	12.22.09	NO Change
2	8.10.12	NO CHANGE
3	1.25.13	Drug/Job Number
4	9.19.14	NO CHANGE

LOCATION: ENG/ENG/ALFAB/443800 DC/MIAMI DADE DC9-02

44/300 DC FRAMING SYSTEM

SHEET NUMBER: 1 of 19

JOB NUMBER: DSC-02

SCALE: N/A

DRAWN BY: NRK

DATE: 08.06.09

SABIC Innovative Plastics U.S., LLC - DBA
Insulgard SECURITY PRODUCTS
1291 RICKETT ROAD BRIGHTON, MI 48116
PHONE (810) 844 - 0776 FAX (810) 844 - 0820

PARTS LIST				
ITEM	NAME	DESCRIPTION	MATERIAL	MANUF.
1	10-1327	FRAME BASE	6105-T5	AACOA
2	10-1328	CHANNEL GLAZING	6105-T5	AACOA
3	10-1329	SNAP CLOSURE	6105-T5	AACOA
4	10-1330	RISER	6105-T5	AACOA
5	10-1550	CORNER L ANGLE 4"x4"x3/16"	6105-T5	AACOA
6		SPACER BLOCK 1"x1"x2" LONG	STYROFOAM	UNIVERSAL PACKAGING
7	G001	SPONGE - NEOPRENE IN COMPLIANCE WITH ASTM C509-08	NEOPRENE DUROMETER 34.3	DS BROWN
8	G005	WEDGE - NEOPRENE IN COMPLIANCE WITH ASTM C864-08	NEOPRENE DUROMETER 80	DS BROWN
9	AF841	ELCO DRIL FLEX® 1/4-14X1 1/2 HWH #3 POINT *(FOR USE W/ STEEL TUBE & STEEL STUD SUBSTRATES)*	SPECIAL ALLOY STEEL	ELCO
	2	¼"X2¾ HWH CRETE-FLEX SS4 MASONARY SCREW *(FOR USE WITH PRE-CAST PANEL SUBSTRATES)*	410 S.S.	ELCO
		#14 x 2½" SLOTTED ROUND HEAD WOOD SCREW *(FOR USE WITH WOOD STUD SUBFRAME)*	18-8 S.S.	PARTS INDUSTRIES
	2	¼"X2¼"HWH CRETE-FLEX SS4 MASONARY SCREW *(FOR USE WITH CMU SUBSTRATES)*	410 S.S.	ELCO
10		#12-24x3/8" PHPMS	18-8 S.S.	PARTS INDUSTRIES
11		1/4-20x1 1/2" HEX W/HD SLOT MS	18-8 S.S.	PARTS INDUSTRIES
12		#10-24x5/16" FHPMS U/C	18-8 S.S.	PARTS INDUSTRIES
13		1/4-20 HEAVY HEX NUT	18-8 S.S.	PARTS INDUSTRIES
14		1/4" HEAVY LOCKWASHER	18-8 S.S.	PARTS INDUSTRIES
15		SHIMS	HIPS POLYMER	PARTS INDUSTRIES
16		2"x4"x1/8" STEEL TUBE (BY OTHERS)	1/8" WALL STEEL	BY OTHER
		STEEL STUDS (BY OTHERS)	20 GA GALVANIZED (STRUCTURAL) = 0.346"	BY OTHER
		8" CONCRETE MASONRY UNITS (BY OTHERS)	MEDIUM WEIGHT CMU, ASTM C90 (MIN. CAPACITY OF 1.9 KSI	BY OTHER
		PRE-CAST PANEL 6"D (BY OTHERS)	CONCRETE, 3000 PSI MIN.	BY OTHER
		2"x4" WOOD STUDS (BY OTHERS)	SPRUCE-PINE-FIR OR BETTER. MINIMUM SPECIFIC GRAVITY G=0.42	BY OTHER
17	40-5007-29 MODIFIED	SETTING BLOCKS - NEOPRENE IN COMPLIANCE WITH ASTM C864-08	NEOPRENE DUROMETER 80-90	DS BROWN
18		GLAZING 56 1/2"W x 51 7/8"H	BALULN25	GLOBAL PLASTICS
19		GLAZING 51 7/8"W x 56 1/2"H	BALULN25	GLOBAL PLASTICS
20		5/8" DIA. BACKER ROD	STD CCPE	WILLIAMS PROD.
21		SEALANT	SILICONE	MOMENTIVE PERFORMANCE MATERIALS
22		WEEP BAFFLE 1" x 1/2"	30PPI CHARCOAL Z	UNITED FOAM
23		WEEP BAFFLE 1/2" x 1/2"	30PPI CHARCOAL Z	UNITED FOAM
24		CONT. 1/8" THICK SPACER W/ (2) 1/16" X 1" DBL SIDED TAPE	UHMW SPACER & FOAM TAPE	QUADRANT
25		CONT. 1/4" X 2 1/2" MULLION SPACER	ALUMINUM	AACOA
26		NAMEPLATE	.032" ANODIZED ALUMINUM	DETROIT NAMEPLATE ETCHING CO.

GENERAL NOTES:

1. ALL ALUMINUM EXTRUSIONS SHALL BE EQUAL TO 6105-T5 ALLOY AND TEMPER HAVING AN ULTIMATE AND YIELD TENSILE STRENGTH OF 38ksi AND 35ksi RESPECTIVELY. 2
2. PROJECT FINISH SHALL BE 204-R1 ANODIZED OR 70% KYNAR PAINTED.
3. GLAZING SHALL BE SABIC INNOVATIVE PLASTICS U.S., LLC BALULN25 WITH A MINIMUM 3/4" PERIMETER GLASS BITE TYPICAL.
4. ANCHOR LOCATIONS WILL BE AS SHOWN ON THE ELEVATIONS. ANCHORS SHALL BE PER THE PARTS LIST PER SUBSTRATE BEING USED.
5. ALL ASSEMBLY FASTENERS SHALL BE 18-8 STAINLESS STEEL.
6. ALL ASSEMBLY FASTENER HEADS EXPOSED TO WATER SHALL BE SEALED.
7. ALL WINDOW UNITS SHALL BE MODULAR, FACTORY FABRICATED, ASSEMBLED AND GLAZED. ANY UNITS NEEDING REPLACEMENT SHALL BE REPLACED WITH ANOTHER FACTORY ASSEMBLED AND GLAZED UNIT.
8. FOR CLARITY, HEAD, JAMB AND SILL DETAILS DO NOT SHOW GLAZING ASSEMBLY SCREWS, ONLY ANCHORAGE TO SUBSTRATE. REFER TO DETAIL F FOR GLAZING ASSEMBLY FASTENERS.
9. ALL FRAMING SHALL HAVE MITERED CORNERS WITH EXTRUDED 4" x 4" x 3/16" THICK CORNER SPLINES RECESSED FLUSH. REFER TO DETAIL G.
10. WIND SPEED, BUILDING HEIGHT, AND EXPOSURE CATEGORY ARE BASED ON SPECIFIC PROJECT LOCATION AND CONDITIONS. THIS PRODUCT IS RATED AS SHOWN IN THE CHART BELOW: 3

Design Pressure Rating	Impact Rating
+/- 70 PSF	Large and Small Missle Impact

11. IN ACCORDANCE WITH FBC 5th Edition (2014) 5 ALL MATERIALS THAT ARE SUPPLIED BY INSULGARD SECURITY PRODUCTS WILL CONFORM TO THE APPLICABLE REQUIREMENTS AS SET FORTH IN ABOVE REFERENCED BUILDING CODE. 3 4
12. FOR ALL SCREW CONNECTIONS TO STEEL TUBE OR STEEL STUD SUBSTRATES, A MINIMUM OF THREE (3) THREADS MUST PENETRATE COMPLETELY THROUGH THE SUBSTRATE MATERIAL. FOR MINIMUM EMBEDMENT DIMENSION AT ALL OTHER SUBSTRATE OPTIONS, SEE ELEVATION AND DETAIL SHEETS FOR THAT SPECIFIC SUBSTRATE. 3

STRUCTURAL ENGINEER

Michael Kourinos, P.E.
Florida License No. 78063
Expiration Date: Feb. 28, 2017

TRITEQ, Inc.
12300 Old Tesson Rd, Suite 300B
St. Louis, MO 63128

Certificate of Authority No. 27425

STRUCTURAL ENGINEER STAMP

MICHAEL N. KOURINOS
LICENSE
No 78063
STATE OF
FLORIDA
PROFESSIONAL ENGINEER
3/23/2015

DADE COUNTY STAMP

PRODUCT REVISED
as complying with the Florida Building Code
Acceptance No. 14-0930.20
Expiration Date 12/30/19
By
Dade Product Control

SHEET NUMBER: 2 of 19
JOB NUMBER: DCS-02

44/300 DC FRAMING SYSTEM

REVISIONS:

NO.	DATE	DESCRIPTION
1	12.02.09	DUROMETER
2	08.10.12	2010 Compliance
3	01.25.13	Notes
4	03.19.14	2014 Compliance
5	03.16.15	NOTES

LOCATION:

SCALE: N/A
DRAWN BY: NRK
DATE: 08.06.09

SABIC Innovative Plastics U.S., LLC - DBA
Insulgard Security Products
1291 RICKETT ROAD BRIGHTON, MI 48116
PHONE (810) 844 - 0776 FAX (810) 844 - 0920

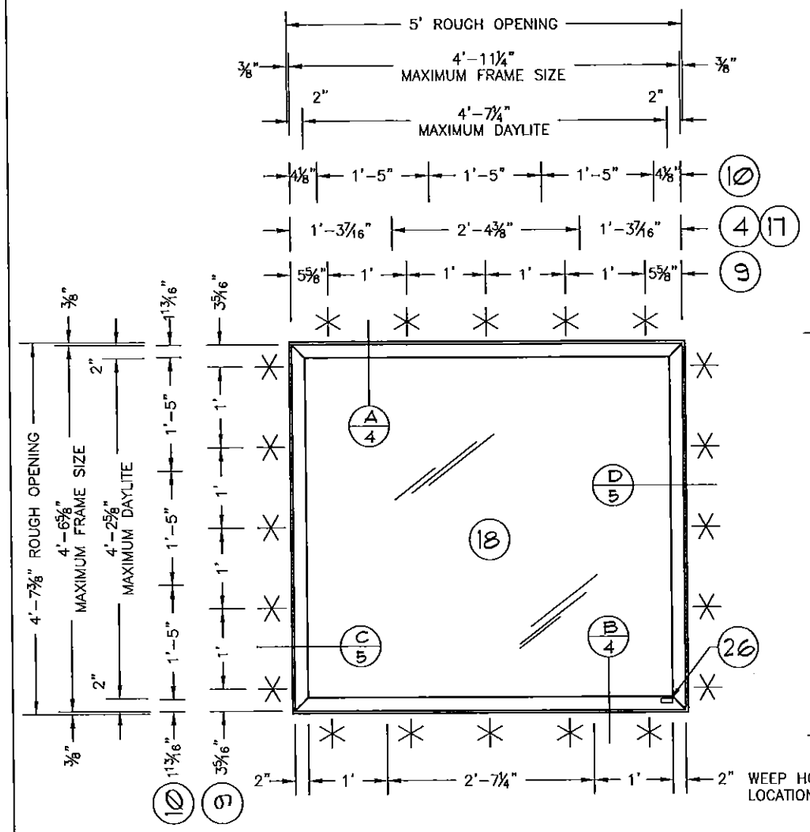

EXTERIOR ELEVATION OF SINGLE UNIT
(STEEL TUBE SUBFRAME)
THREAT SIDE

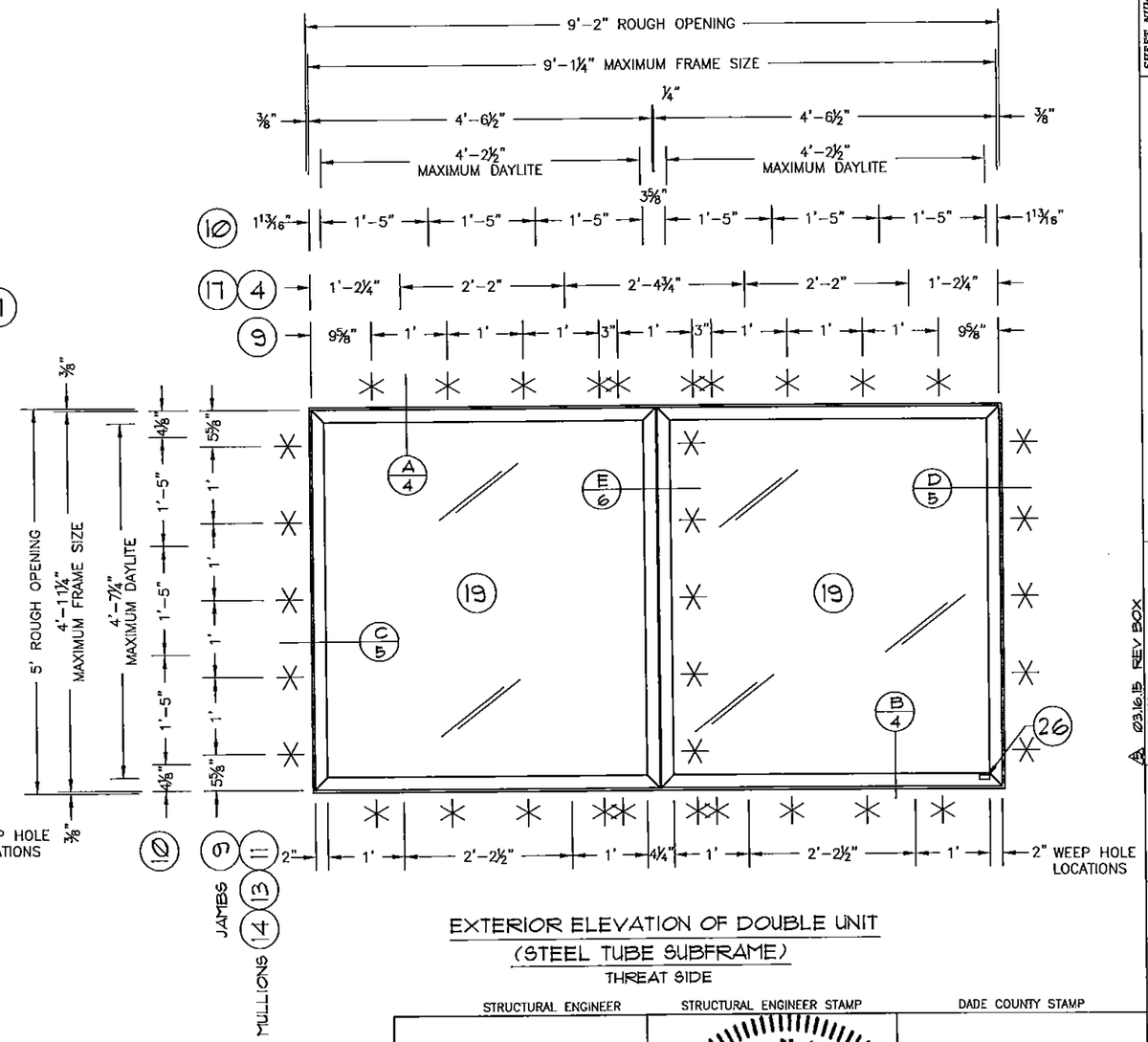

EXTERIOR ELEVATION OF DOUBLE UNIT
(STEEL TUBE SUBFRAME)
THREAT SIDE

NOTE:
THESE ARE APPROVED MAXIMUM DIMENSIONS AND PRESSURES, FOR ACTUAL WINDOW DIMENSIONS, SEE SPECIFIC SHOP DRAWINGS FOR EACH JOB.

STRUCTURAL ENGINEER	STRUCTURAL ENGINEER STAMP	DADE COUNTY STAMP
Michael Kourinos, P.E. Florida License No. 78063 Expiration Date: Feb. 28, 2017 TRITEQ, Inc. 12300 Old Tesson Rd, Suite 300B St. Louis, MO 63128 Certificate of Authority No. 27425	MICHAEL N KOURINOS LICENSE No 78063 STATE OF FLORIDA PROFESSIONAL ENGINEER 3/23/2015	PRODUCT REVISED as complying with the Florida Building Code Acceptance No 14-0930.20 Expiration Date 12/30/19 By Miami-Dade Product Control

SHEET NUMBER: 3 of 19
JOB NUMBER: DCS-02

44/300 DC FRAMING SYSTEM

REVISIONS:

NO.	DATE	DESCRIPTION
1	12.07.09	No Change
2	08.10.012	No Change
3	01.25.13	Call Outs
4	09.19.14	No Change
5	03.16.15	REV BOX

LOCATION:

SCALE: N/A
DRAWN BY: NRK
DATE: 08.06.09

SABIC Innovative Plastics U.S., LLC - DBA
Insulgard SECURITY PRODUCTS
1291 RICKETT ROAD BRIGHTON, MI 48116
PHONE (810) 844 - 0776 FAX (810) 844 - 0920

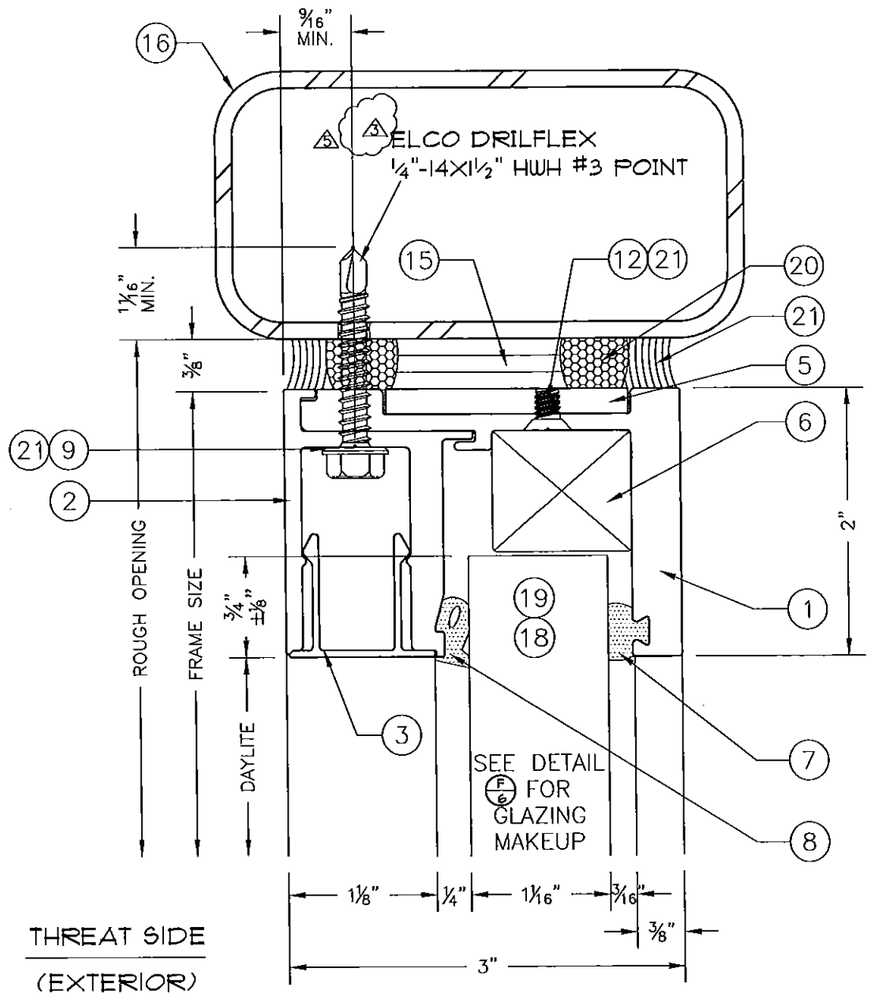

A HEAD

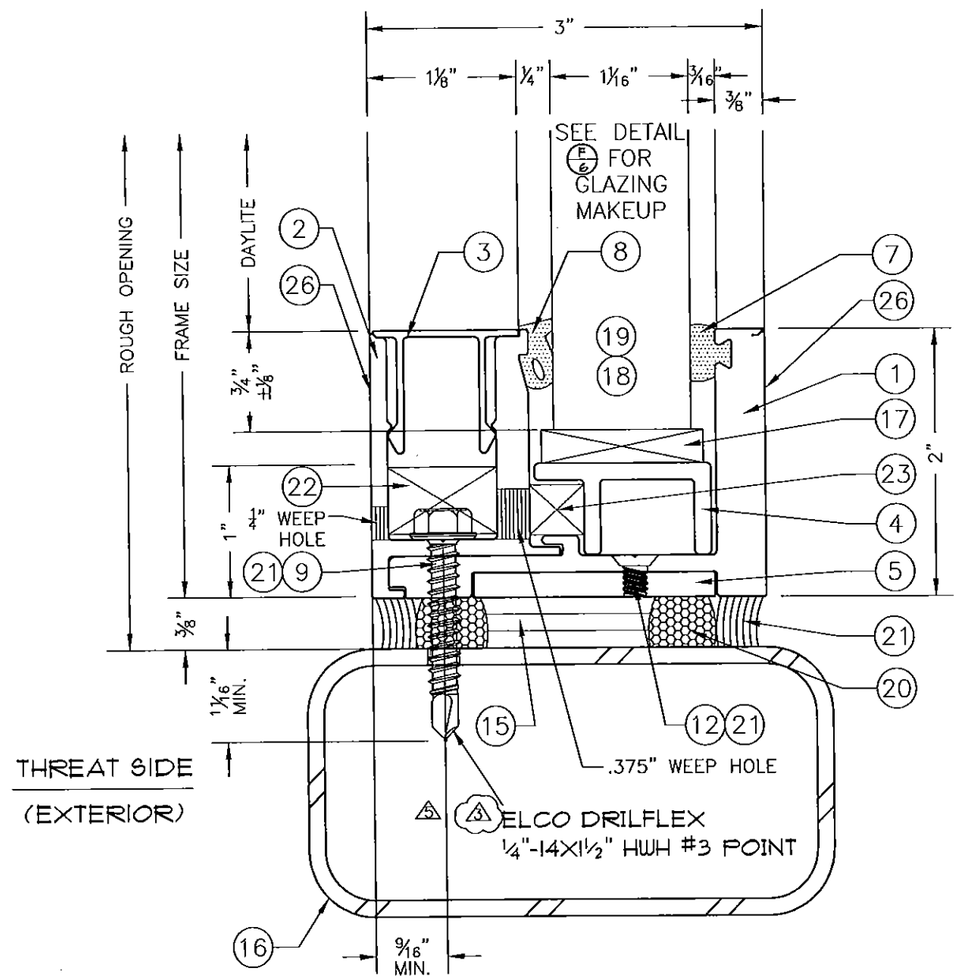

B SILL

NOTES:
FOR ALL METAL SCREW CONNECTIONS, A MINIMUM OF THREE (3) THREADS MUST PENETRATE COMPLETELY THRU THE SUBSTRATE MATERIAL.

STRUCTURAL ENGINEER

Michael Kourinos, P.E.
Florida License No. 78063
Expiration Date: Feb. 28, 2017

TRITEQ, Inc.
12300 Old Tesson Rd, Suite 300B
St. Louis, MO 63128

Certificate of Authority No. 27425

STRUCTURAL ENGINEER STAMP

MICHAEL N KOURINOS
LICENSE
No 78063
STATE OF
FLORIDA
PROFESSIONAL ENGINEER

3/23/2015

DADE COUNTY STAMP

PRODUCT REVISED
as complying with the Florida Building Code
Acceptance No. 14-0930.20
Expiration Date 12/30/19
Dade Product Control

SHEET NUMBER: 4 of 19
JOB NUMBER: DC5-02

44/300 DC FRAMING SYSTEM

REVISIONS:

NO.	DATE	DESCRIPTION
1	12.02.09	No Change
2	08.10.012	No Change
3	01.25.13	Call Outs
4	09.19.14	No Change
5	03.16.15	REV TAGS

LOCATION:

SCALE: FULL
DRAWN BY: NRK
DATE: 08.06.09

SABIC Innovative Plastics U.S., LLC - DBA
Insulgard Security Products
1291 RICKETT ROAD
BRIGHTON, MI 48116
PHONE (810) 844 - 0776
FAX (810) 844 - 0820

NOTES:
FOR ALL METAL SCREW CONNECTIONS, A MINIMUM OF THREE (3) THREADS MUST PENETRATE COMPLETELY THRU THE SUBSTRATE MATERIAL.

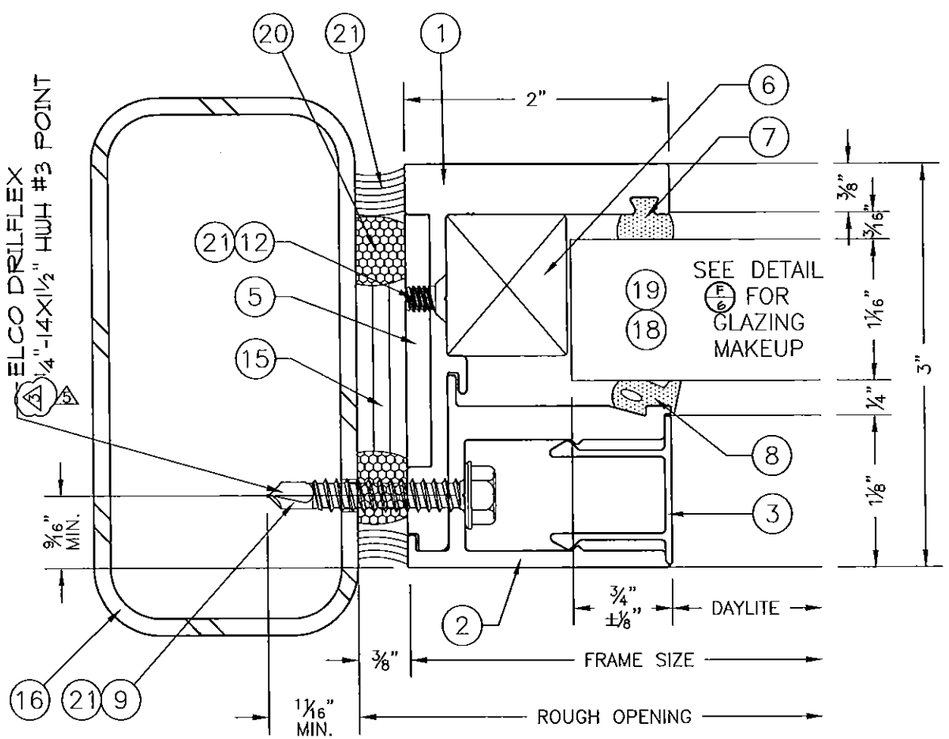

THREAT SIDE
(EXTERIOR)

C JAMB

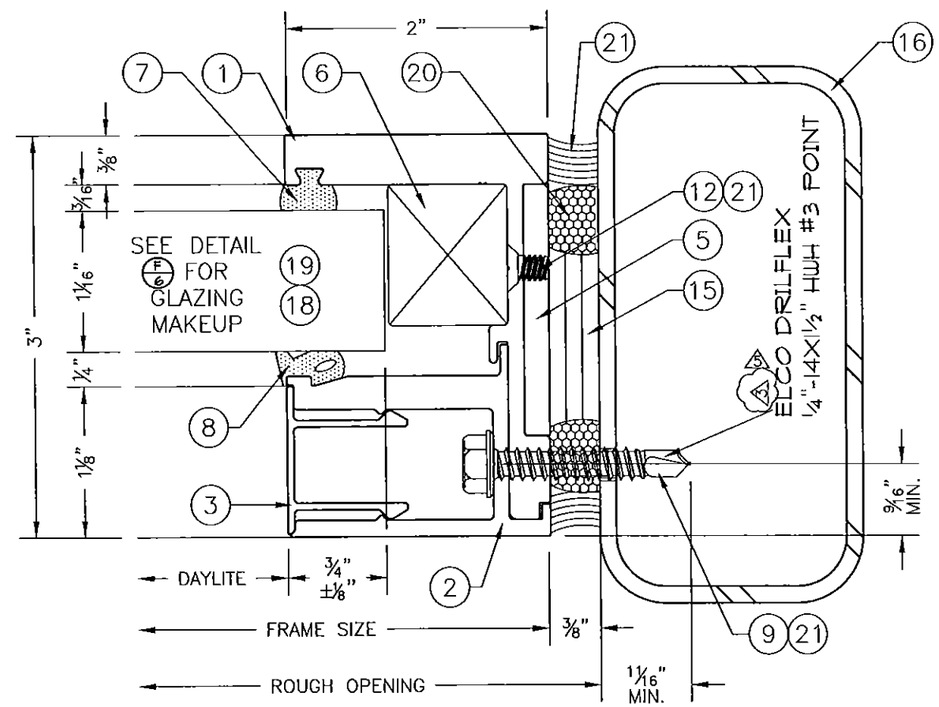

THREAT SIDE
(EXTERIOR)

D JAMB

STRUCTURAL ENGINEER	STRUCTURAL ENGINEER STAMP	DADE COUNTY STAMP
Michael Kourinos, P.E. Florida License No. 78063 Expiration Date: Feb. 28, 2017 TRITEQ, Inc. 12300 Old Tesson Rd, Suite 300B St. Louis, MO 63128 Certificate of Authority No. 27425	MICHAEL N KOURINOS LICENSE No 78063 STATE OF FLORIDA PROFESSIONAL ENGINEER 3/23/2015	PRODUCT REVISED as complying with the Florida Building Code Acceptance No 14-0930.20 Expiration Date 12/30/19 By: Miami-Dade Product Control

SABIC Innovative Plastics U.S., LLC - DBA
Insulgard SECURITY PRODUCTS
1291 RICKETT ROAD BRIGHTON, MI 48116
PHONE (810) 844-0776 FAX (810) 844-0920

SCALE: FULL
DRAWN BY: NRK
DATE: 08.06.09

REVISIONS:

NO.	DATE	DESCRIPTION
1	12.02.09	No Change
2	08.12.012	No Change
3	01.25.13	Call Outs
4	08.19.14	No Change
5	03.16.15	REV TAGS

LOCATION:

44/300 DC FRAMING SYSTEM

SHEET NUMBER: 5 of 19
JOB NUMBER: DCS-02

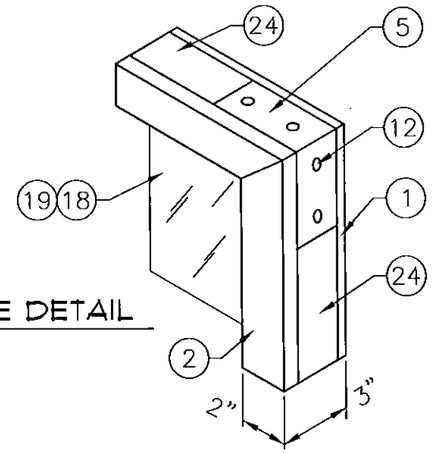

G CORNER ANGLE DETAIL

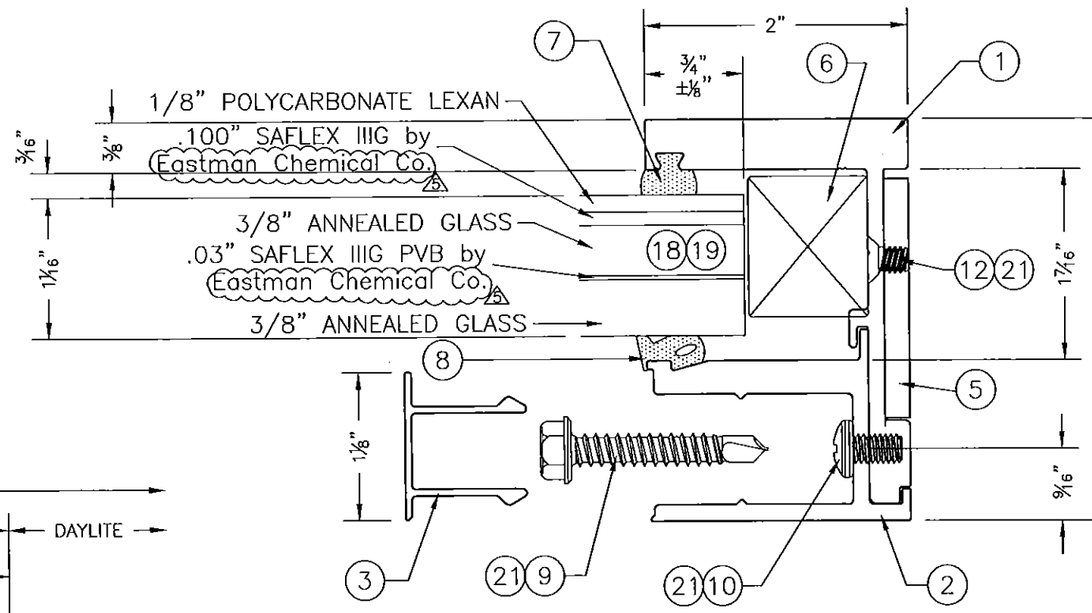

THREAT SIDE
(EXTERIOR)

F SHOP GLAZING ASSEMBLY ATTACHMENT

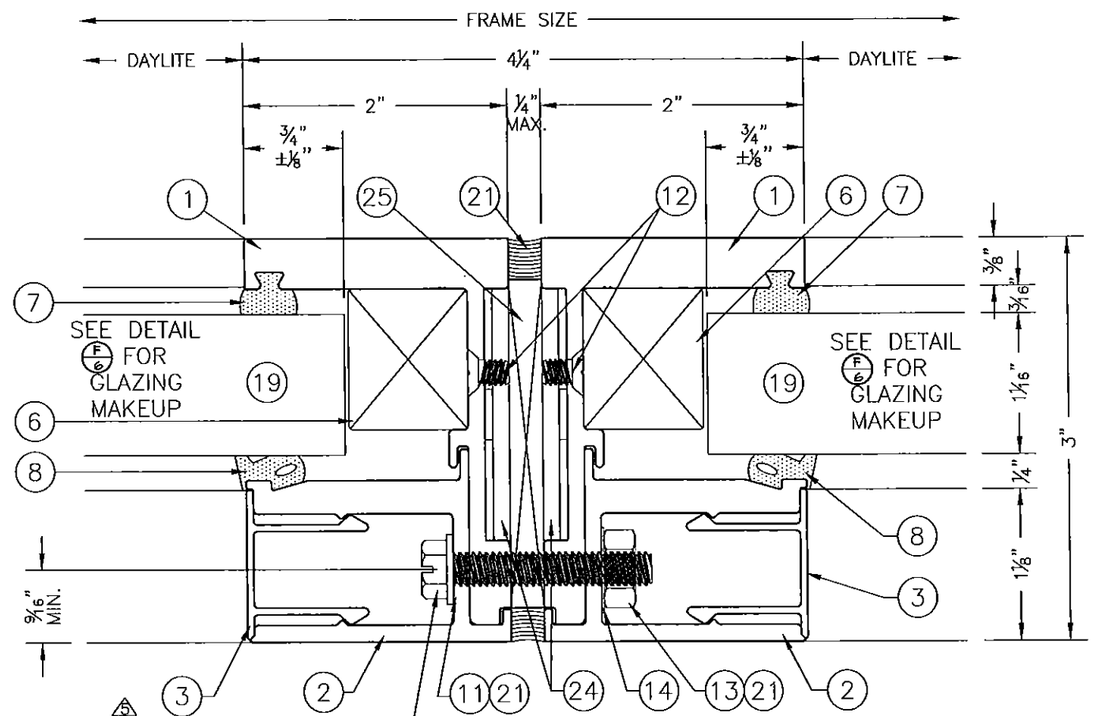

E MULLION

NOTES:
FOR ALL SCREW CONNECTIONS TO STEEL TUBE OR STEEL STUD SUBSTRATES, A MINIMUM OF THREE (3) THREADS MUST PENETRATE COMPLETELY THRU THE SUBSTRATE MATERIAL. FOR ALL OTHER SUBSTRATES, A MINIMUM OF THREE (3) THREADS FOR EMBEDMENT.

STRUCTURAL ENGINEER	STRUCTURAL ENGINEER STAMP	DADE COUNTY STAMP
Michael Kourinos, P.E. Florida License No. 78063 Expiration Date: Feb. 28, 2017 TRITEQ, Inc. 12300 Old Tesson Rd, Suite 300B St. Louis, MO 63128 Certificate of Authority No. 27425	MICHAEL N KOURINOS LICENSE No 78063 STATE OF FLORIDA PROFESSIONAL ENGINEER 3/23/2015	PRODUCT REVISED as complying with the Florida Building Code Acceptance No 14-0930.20 Expiration Date 12/30/19 By Miami Dade Product Control

SHEET NUMBER: 6 of 19
JOB NUMBER: DCS-02

44/300 DC FRAMING SYSTEM

REVISIONS: NO.	DATE	DESCRIPTION
1	12.02.09	No Change
2	08.10.2012	No Change
3	01.25.13	Call Outs
4	09.19.14	No Change
5	03.16.15	CALL OUTS

LOCATION:

SCALE: FULL
DRAWN BY: NRK
DATE: 08.06.09

SABIC Innovative Plastics U.S., LLC - DBA
Insulgard Security Products
BRIGHTON, MI 48116
1291 RICKETT ROAD
PHONE (810) 844-0776
FAX (810) 844-0820

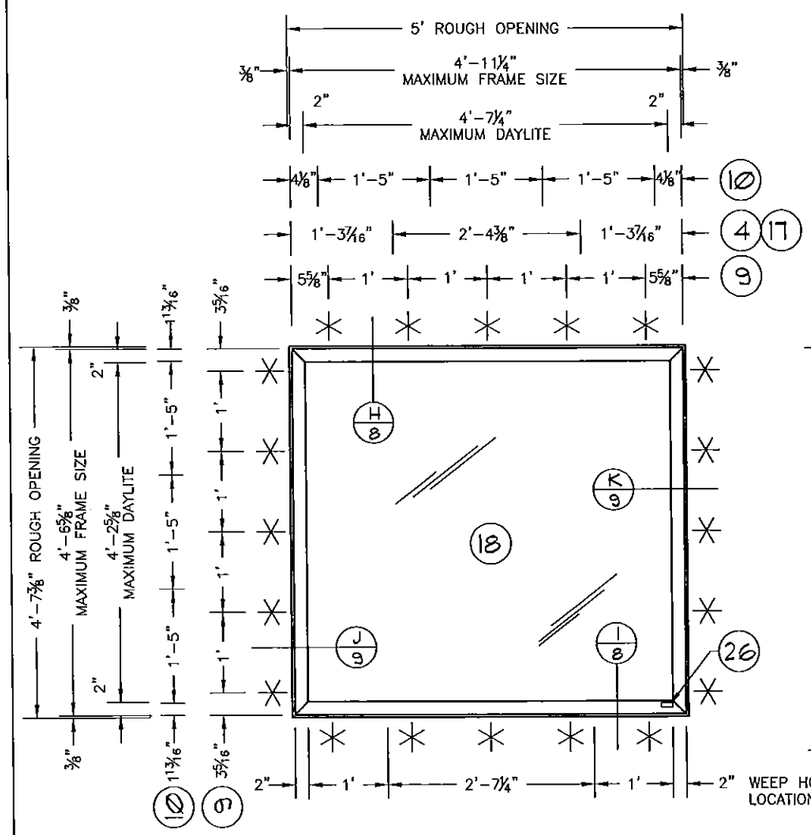

EXTERIOR ELEVATION OF SINGLE UNIT

(STEEL STUD SUBSTRATE)

THREAT SIDE

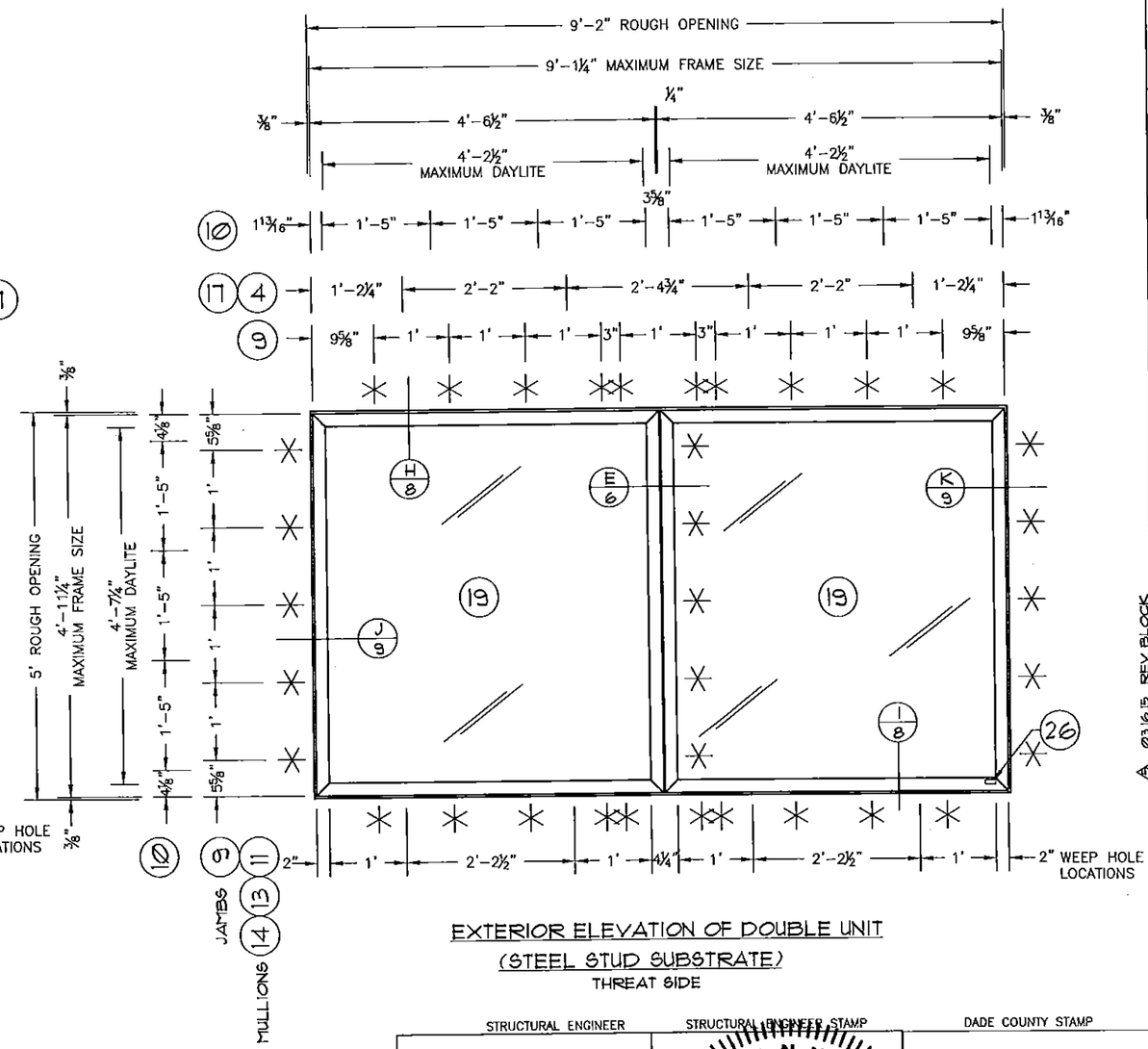

EXTERIOR ELEVATION OF DOUBLE UNIT

(STEEL STUD SUBSTRATE)

THREAT SIDE

NOTE:
THESE ARE APPROVED MAXIMUM DIMENSIONS AND PRESSURES, FOR ACTUAL WINDOW DIMENSIONS, SEE SPECIFIC SHOP DRAWINGS FOR EACH JOB.

STRUCTURAL ENGINEER	STRUCTURAL ENGINEER STAMP	DADE COUNTY STAMP
Michael Kourinos, P.E. Florida License No. 78063 Expiration Date: Feb. 28, 2017 TRITEQ, Inc. 12300 Old Tesson Rd, Suite 300B St. Louis, MO 63128 Certificate of Authority No. 27425	MICHAEL N KOURINOS LICENSE No 78063 STATE OF FLORIDA PROFESSIONAL ENGINEER 3/23/2015	PRODUCT REVISED as complying with the Florida Building Code Acceptance No 14-0930.20 Expiration Date 12/30/19 By: Miami Dade Product Control

SHEET NUMBER: 7 of 19

JOB NUMBER: DCS-02

44/300 DC FRAMING SYSTEM

REVISIONS:

NO.	DATE	DESCRIPTION
1	12.02.09	No Change
2	08.10.012	No Change
3	01.25.13	Call Outs
4	09.19.14	No Change
5	03.16.15	REV BLOCK

LOCATION:

SCALE: N/A

DRAWN BY: NRK

DATE: 08.06.09

SABIC Innovative Plastics U.S., LLC - DBA
Insulguard Security Products
1291 RICKETT ROAD BRIGHTON, MI 48116
PHONE (810) 844-0776 FAX (810) 844-0820

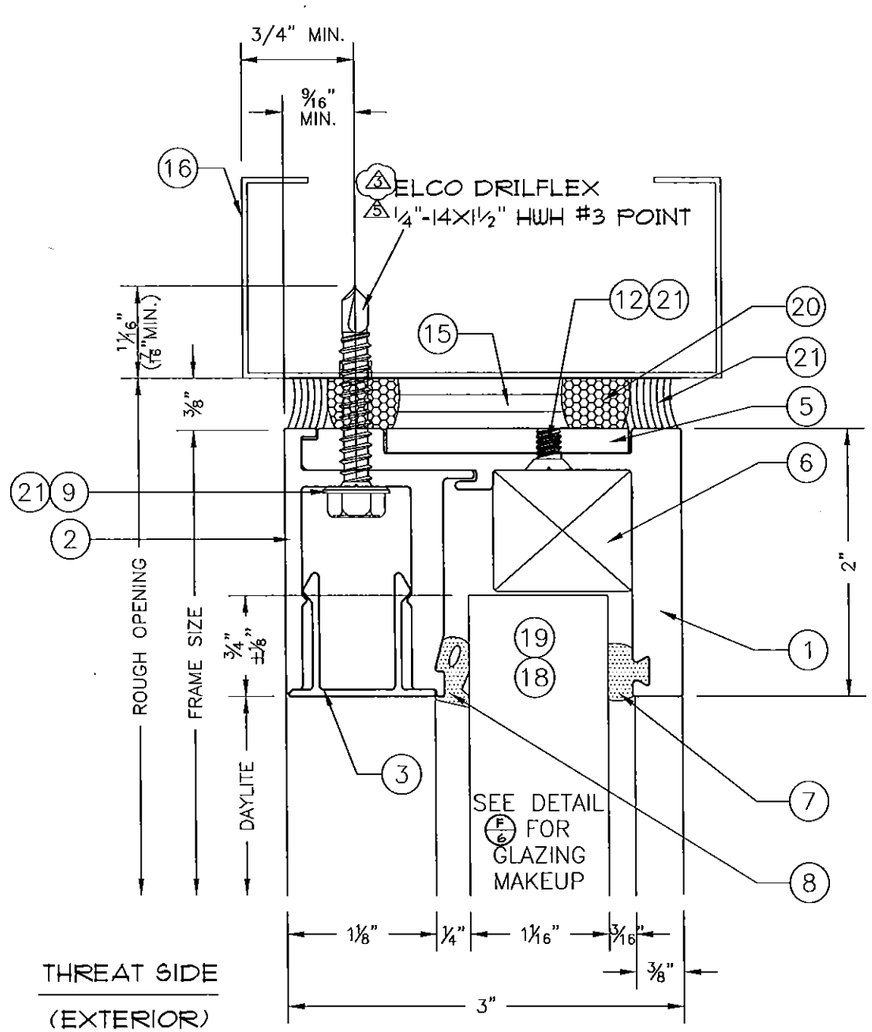

H HEAD

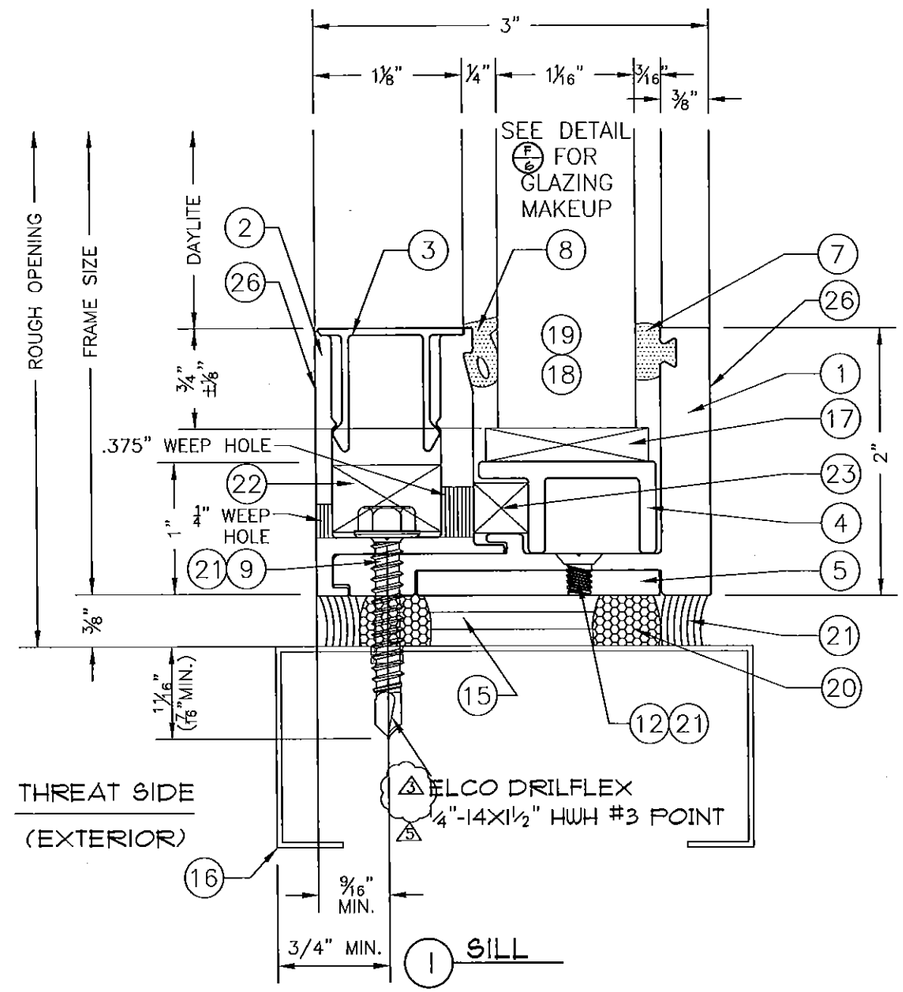

1 SILL

NOTES:
FOR ALL METAL SCREW CONNECTIONS, A MINIMUM OF THREE (3) THREADS MUST PENETRATE COMPLETELY THRU THE SUBSTRATE MATERIAL.

STRUCTURAL ENGINEER

Michael Kourinos, P.E.
Florida License No. 78063
Expiration Date: Feb. 28, 2017

TRITEQ, Inc.
12300 Old Tesson Rd, Suite 300B
St. Louis, MO 63128

Certificate of Authority No. 27425

STRUCTURAL ENGINEER STAMP

MICHAEL N KOURINOS
LICENSE
No 78063
STATE OF
FLORIDA
PROFESSIONAL ENGINEER

3/23/2015

DADE COUNTY STAMP

PRODUCT REVISED
as complying with the Florida Building Code
Acceptance No. 14-0930.20
Expiration Date 12/30/19
By
Miami-Dade Product Control

SHEET NUMBER: 8 of 19
JOB NUMBER: DCS-02

44/300 DC FRAMING SYSTEM

REVISIONS:

NO.	DATE	DESCRIPTION
1	12.02.09	No Change
2	08.10.012	No Change
3	01.25.13	Call Outs
4	03.19.14	No Change
5	03.16.15	REV TAGS

LOCATION:

SCALE: FULL
DRAWN BY: NRK
DATE: 08.06.09

SABIC Innovative Plastics U.S., LLC - DBA
Insulgard Security Products
1291 RICKETT ROAD
BRIGHTON, MI 48116
PHONE (810) 844-0776
FAX (810) 844-0920

NOTES:
FOR ALL METAL SCREW CONNECTIONS, A MINIMUM OF THREE (3) THREADS MUST PENETRATE COMPLETELY THRU THE SUBSTRATE MATERIAL.

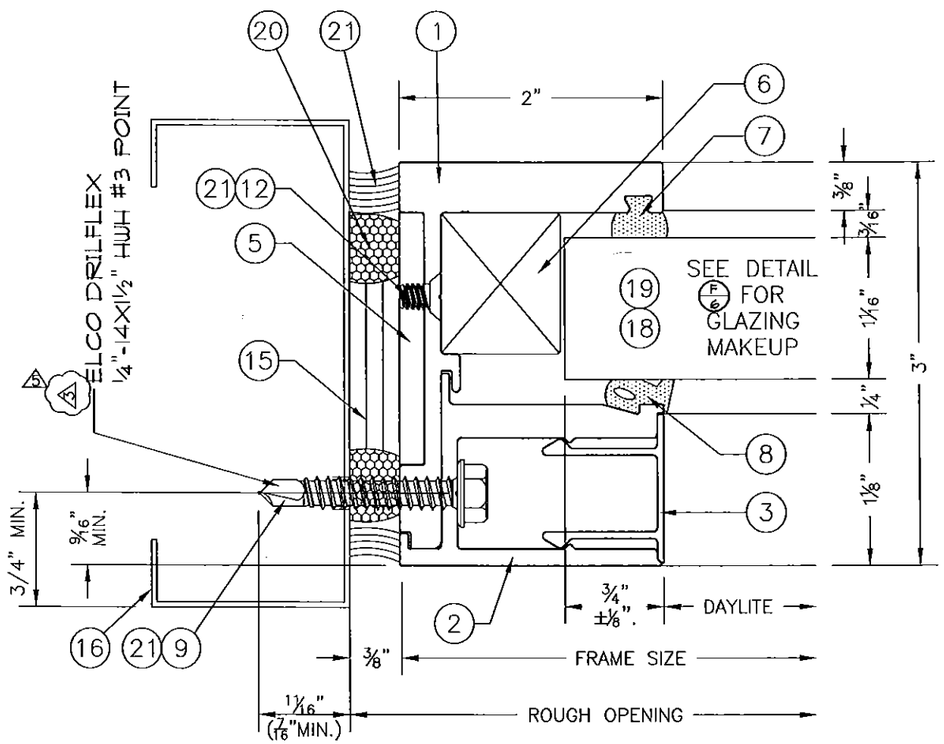

THREAT SIDE
(EXTERIOR)

J JAMB

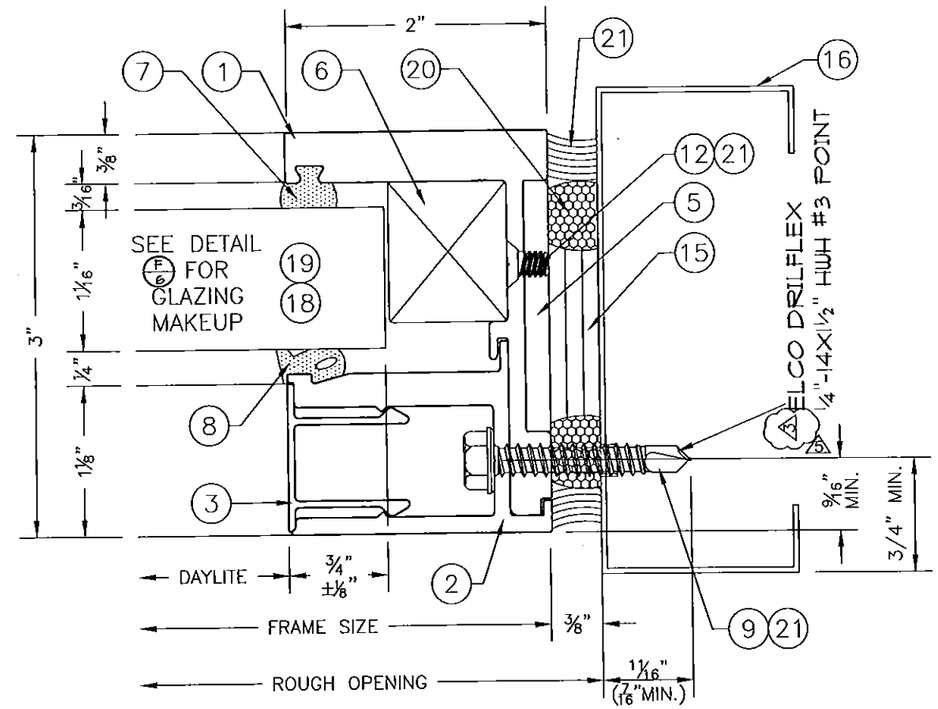

THREAT SIDE
(EXTERIOR)

K JAMB

STRUCTURAL ENGINEER	STRUCTURAL ENGINEER STAMP	DADE COUNTY STAMP
Michael Kourinos, P.E. Florida License No. 78063 Expiration Date: Feb. 28, 2017 TRITEQ, Inc. 12300 Old Tesson Rd, Suite 300B St. Louis, MO 63128 Certificate of Authority No. 27425	MICHAEL N KOURINOS LICENSE No 78063 STATE OF FLORIDA PROFESSIONAL ENGINEER 3/23/2015	PRODUCT REVISED as complying with the Florida Building Code Acceptance No. 14-0930.20 Expiration Date 12/30/19 By Miami Dade Product Control

SHEET NUMBER: 9 of 19
JOB NUMBER: DCS-02

44/300 DC FRAMING SYSTEM

REVISIONS: REV TAGS

NO	DATE	DESCRIPTION
1	12.21.09	No Change
2	08.10.012	No Change
3	01.25.13	Call Outs
4	09.19.14	No Change
5	03.16.15	

SCALE: FULL
DRAWN BY: NRK
DATE: 08.06.09
LOCATION:

SABIC Innovative Plastics U.S., LLC - DBA
Insulgard Security Products
1291 RICKETT ROAD BRIGHTON, MI 48116
PHONE (810) 844-0776 FAX (810) 844-0920

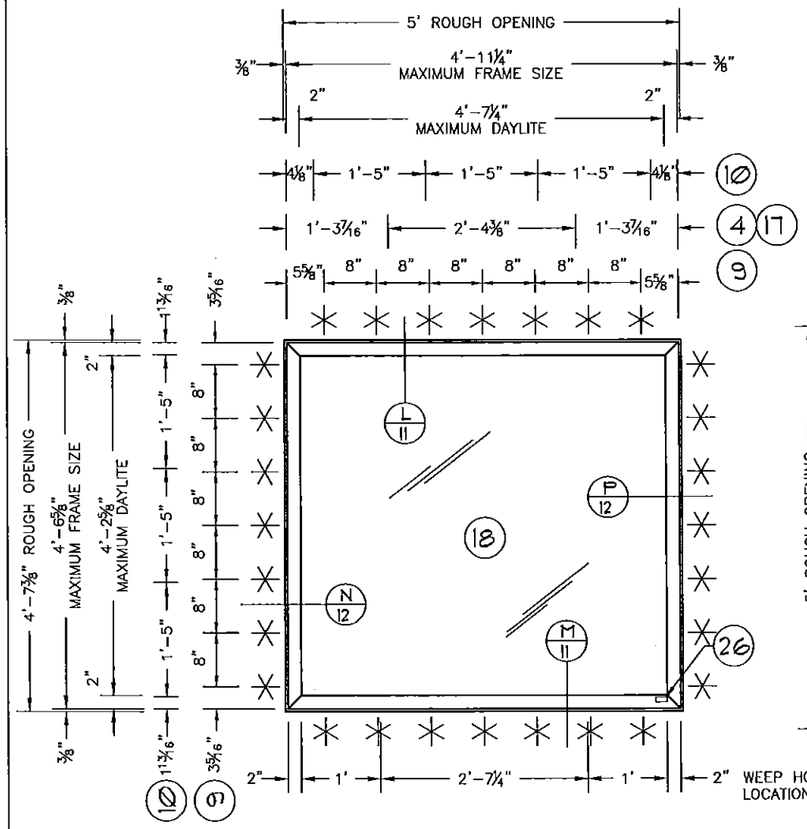

EXTERIOR ELEVATION OF SINGLE UNIT
(CMU SUBSTRATE)
THREAT SIDE

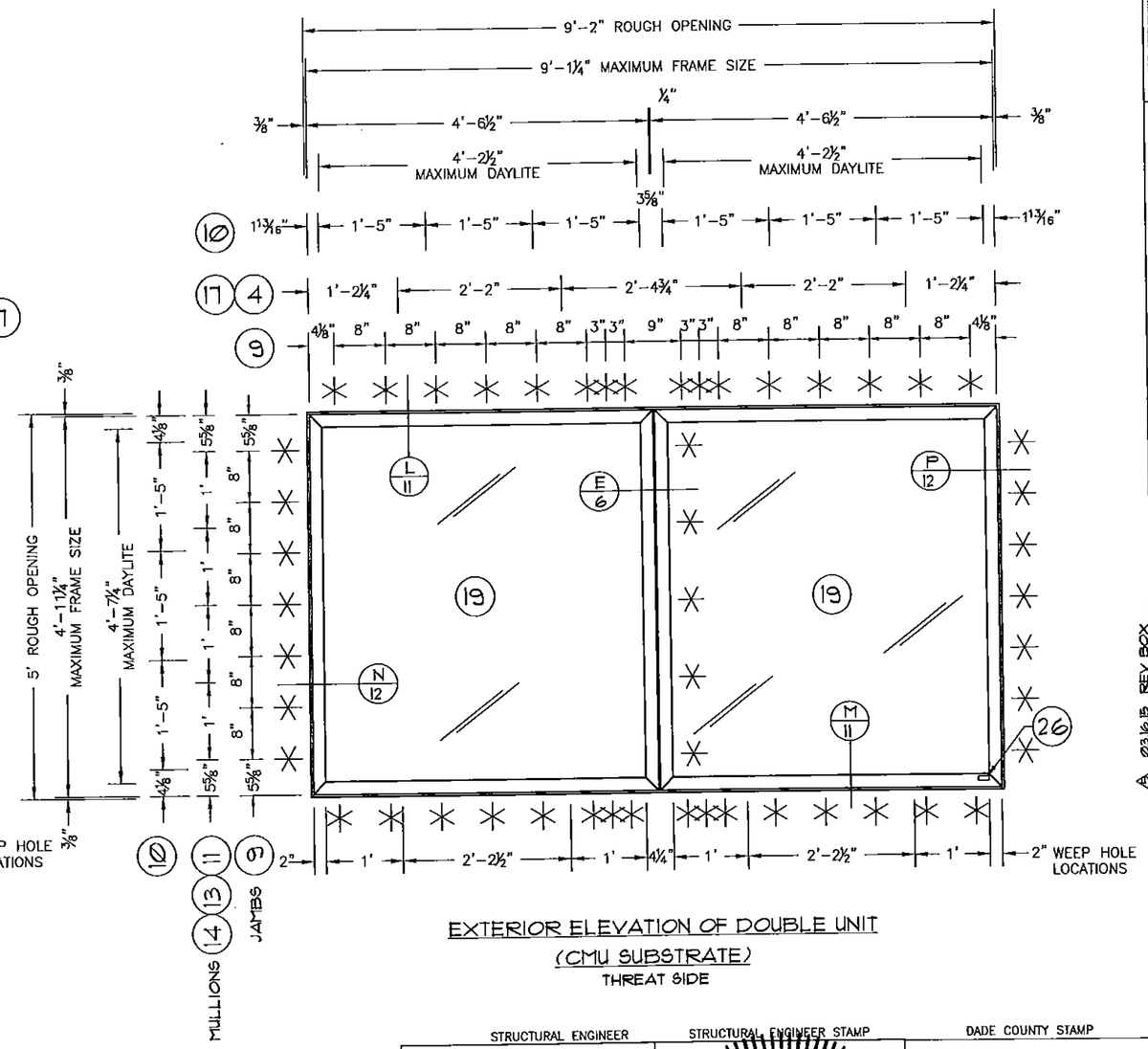

EXTERIOR ELEVATION OF DOUBLE UNIT
(CMU SUBSTRATE)
THREAT SIDE

NOTE:
THESE ARE APPROVED MAXIMUM DIMENSIONS AND PRESSURES, FOR ACTUAL WINDOW DIMENSIONS, SEE SPECIFIC SHOP DRAWINGS FOR EACH JOB.

STRUCTURAL ENGINEER

Michael Kourinos, P.E.
Florida License No. 78063
Expiration Date: Feb. 28, 2017

TRITEQ, Inc.
12300 Old Tesson Rd, Suite 300B
St. Louis, MO 63128

Certificate of Authority No. 27425

STRUCTURAL ENGINEER STAMP

MICHAEL N KOURINOS
LICENSE
No 78063
STATE OF
FLORIDA
PROFESSIONAL ENGINEER

3/2/2015

DADE COUNTY STAMP

PRODUCT REVISED
as complying with the Florida Building Code
Acceptance No 14-0930.20
Expiration Date 12/30/19
By
Miami Dade Product Control

SHEET NUMBER: 10 of 19
JOB NUMBER: DC6-02

44/300 DC FRAMING SYSTEM

REVISIONS: NO.	DATE	DESCRIPTION
1	12.02.09	No Change
2	08.12.012	No Change
3	01.25.13	Call Outs
4	03.19.14	No Change
5	03.16.15	REV BOX

SCALE: N/A
DRAWN BY: NRK
DATE: 08.06.09

SABIC Innovative Plastics U.S., LLC - DBA
Insulgard Security Products
1291 RICKETT ROAD BRIGHTON, MI 48116
PHONE (810) 844 - 0776 FAX (810) 844 - 0920

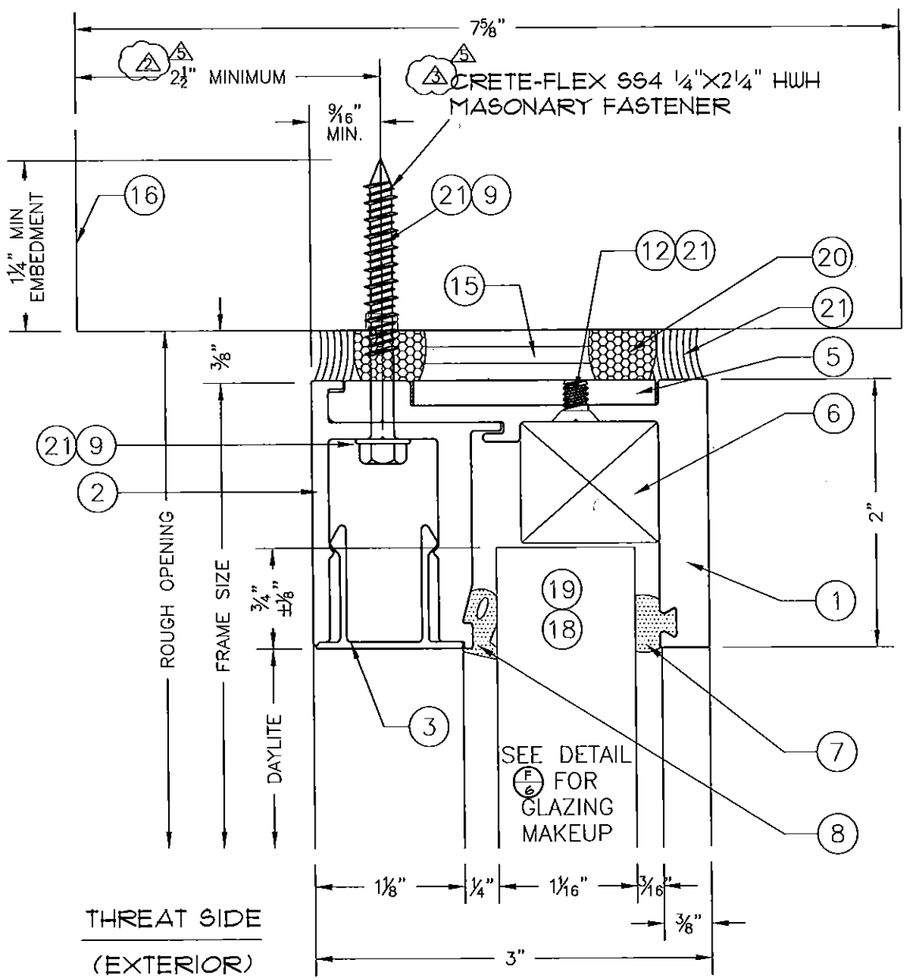

L HEAD

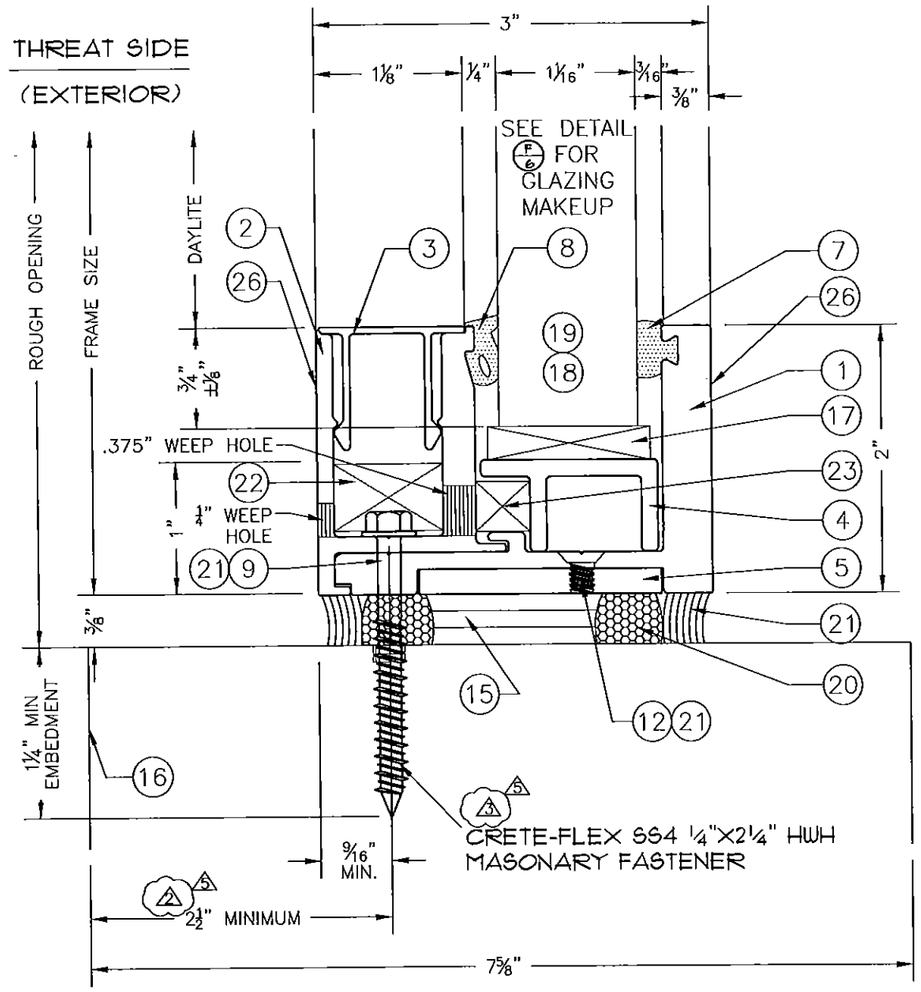

M SILL

NOTES:
FOR ALL METAL SCREW CONNECTIONS, A MINIMUM OF THREE (3) THREADS FOR EMBEDMENT IS REQUIRED.

STRUCTURAL ENGINEER	STRUCTURAL ENGINEER STAMP	DADE COUNTY STAMP
Michael Kourinos, P.E. Florida License No. 78063 Expiration Date: Feb. 28, 2017 TRITEQ, Inc. 12300 Old Tesson Rd, Suite 300B St. Louis, MO 63128 Certificate of Authority No. 27425	MICHAEL N KOURINOS LICENSE No 78063 STATE OF FLORIDA PROFESSIONAL ENGINEER 3/23/2018	PRODUCT REVISED as complying with the Florida Building Code Acceptance No 14-0930.20 Expiration Date 12/30/19 By Miami-Dade Product Control

SHEET NUMBER: 11 of 19
JOB NUMBER: DCS-02

44/300 DC FRAMING SYSTEM

REVISIONS:

NO.	DATE	DESCRIPTION
3	03.16.15	REV TAGS
2	12.07.09	No Change
1	08.10.012	2010 Compliance
0	01.25.13	Fasteners
4	03.19.14	No Change

LOCATION:

SCALE: FULL
DRAWN BY: NRK
DATE: 08.06.03

SABIC Innovative Plastics U.S., LLC - DBA
Insulgard Security Products
BRIGHTON, MI 48116
1291 RICKETT ROAD
PHONE (810) 844 - 0776
FAX (810) 844 - 0820

NOTES:
FOR ALL METAL SCREW CONNECTIONS, A MINIMUM OF THREE (3) THREADS FOR EMBEDMENT IS REQUIRED.

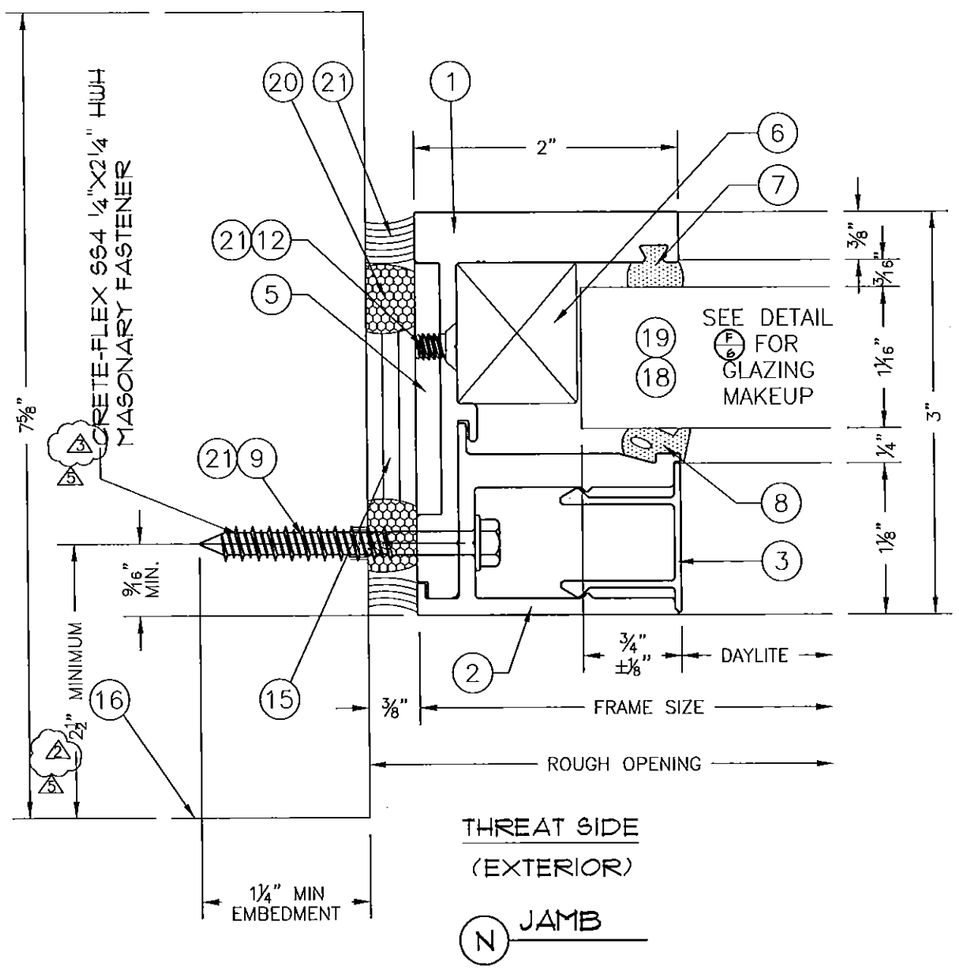

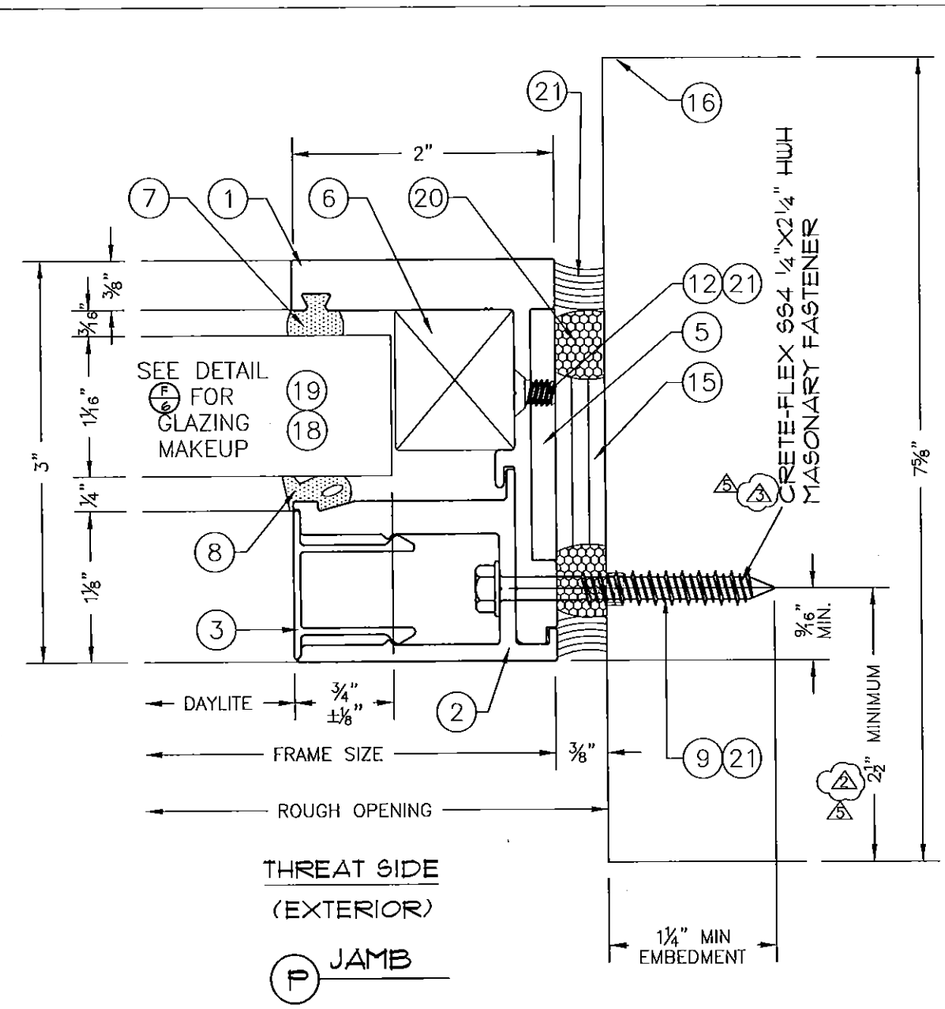

STRUCTURAL ENGINEER

Michael Kourinos, P.E.
Florida License No. 78063
Expiration Date: Feb. 28, 2017

TRITEQ, Inc.
12300 Old Tesson Rd, Suite 300B
St. Louis, MO 63128

Certificate of Authority No. 27425

STRUCTURAL ENGINEER STAMP

MICHAEL N KOURINOS
LICENSE
No 78063
STATE OF
FLORIDA
PROFESSIONAL ENGINEER

DADE COUNTY STAMP

PRODUCT REVISED
as complying with the Florida Building Code
Acceptance No. 14-0930.20
Expiration Date 12/30/19
By
Miami Dade Product Control

SABIC Innovative Plastics U.S., LLC - DBA
Insulgard SECURITY PRODUCTS
1291 RICKETT ROAD BRIGHTON, MI 48116
PHONE (810) 844 - 0776 FAX (810) 844 - 0920

SCALE: FULL
DRAWN BY: NRK
DATE: 08.06.09

REVISIONS:

NO.	DATE	DESCRIPTION
1	12.02.09	No Change
2	08.10.012	2010 Compliance
3	01.25.13	Fasteners
4	02.19.14	No Change
5	03.16.15	REV TAGS

LOCATION:

44/300 DC FRAMING SYSTEM

SHEET NUMBER: 12 of 19
JOB NUMBER: DCS-02

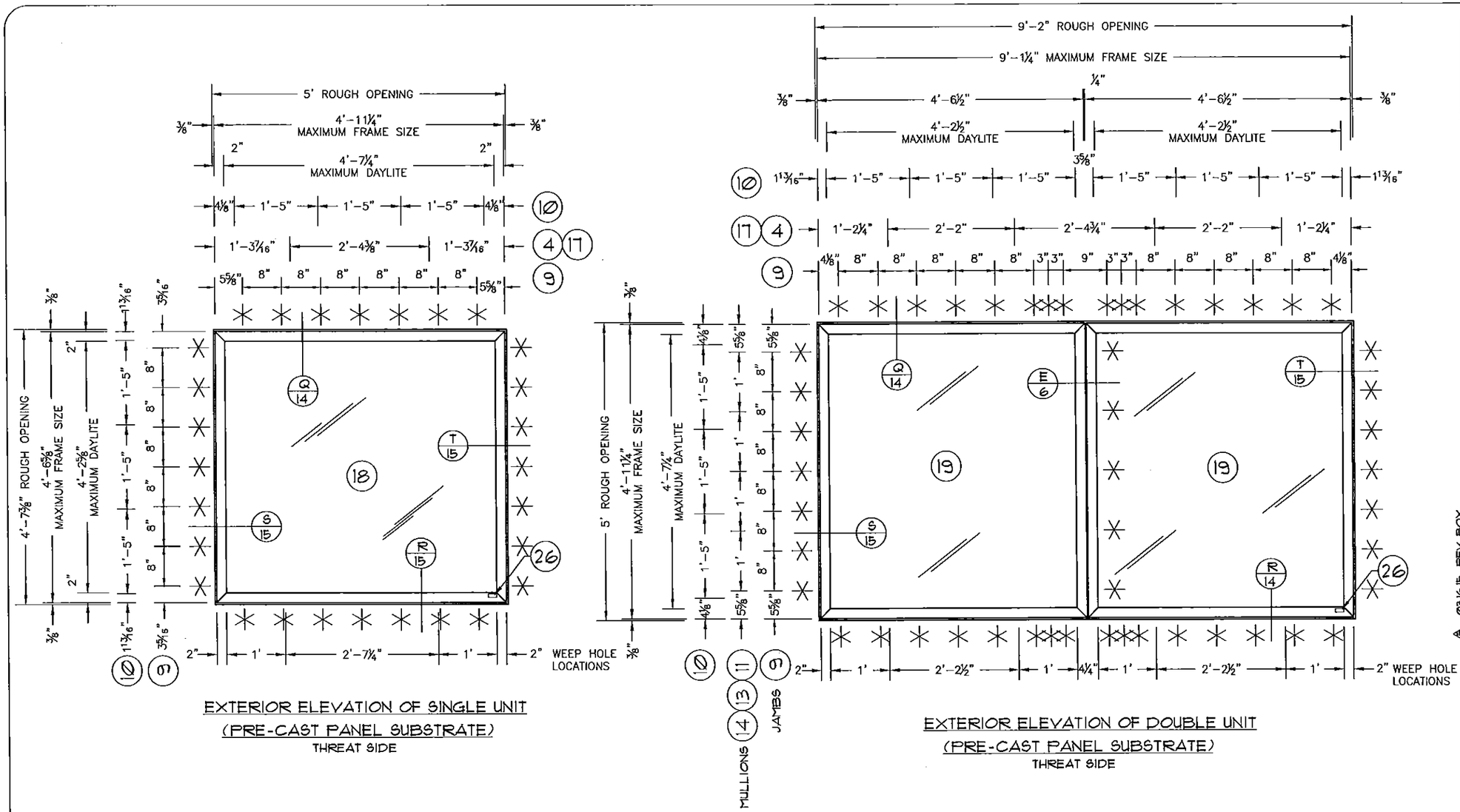

EXTERIOR ELEVATION OF SINGLE UNIT
(PRE-CAST PANEL SUBSTRATE)
THREAT SIDE

EXTERIOR ELEVATION OF DOUBLE UNIT
(PRE-CAST PANEL SUBSTRATE)
THREAT SIDE

NOTE:
THESE ARE APPROVED MAXIMUM DIMENSIONS AND PRESSURES, FOR ACTUAL WINDOW DIMENSIONS, SEE SPECIFIC SHOP DRAWINGS FOR EACH JOB.

STRUCTURAL ENGINEER

Michael Kourinos, P.E.
Florida License No. 78063
Expiration Date: Feb. 28, 2017

TRITEQ, Inc.
12300 Old Tesson Rd, Suite 300B
St. Louis, MO 63128

Certificate of Authority No. 27425

STRUCTURAL ENGINEER STAMP

MICHAEL N KOURINOS
LICENSE
No 78063
STATE OF
FLORIDA
PROFESSIONAL ENGINEER

DADE COUNTY STAMP

PRODUCT REVISED
as complying with the Florida Building Code
Acceptance No. 14-0930.20
Expiration Date 12/30/19
By
Miami Dade Product Control

SHEET NUMBER: 13 of 19
JOB NUMBER: DCS-02

44/300 DC FRAMING SYSTEM

REVISIONS:

NO.	DATE	DESCRIPTION
1	12.02.09	No Change
2	08.10.012	No Change
3	01.25.13	Call Outs
4	03.19.14	No Change
5	03.16.15	REV. BOX

LOCATION:

SCALE: N/A
DRAWN BY: NRK
DATE: 08.06.03

SABIC Innovative Plastics U.S., LLC - DBA
Insulgard Security Products
1291 RICKETT ROAD BRIGHTON, MI 48116
PHONE (810) 844-0776 FAX (810) 844-0920

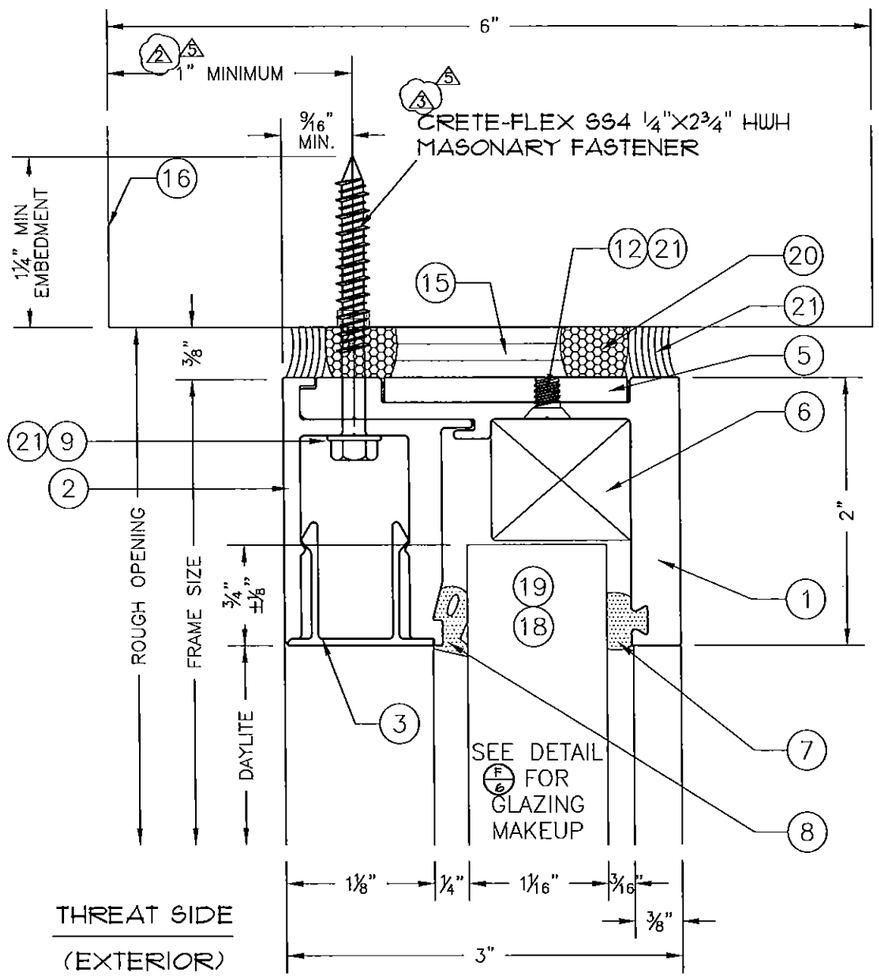

Q HEAD

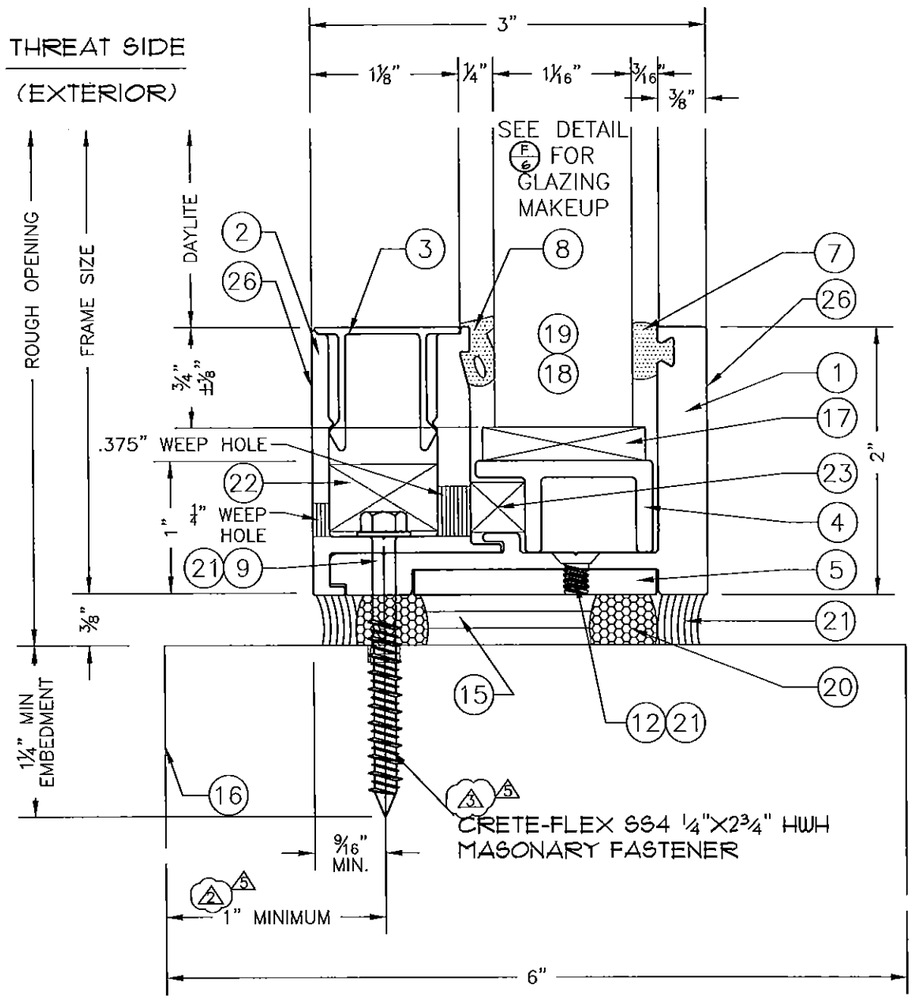

R SILL

NOTES:
FOR ALL METAL SCREW CONNECTIONS, A MINIMUM OF THREE (3) THREADS FOR EMBEDMENT IS REQUIRED.

STRUCTURAL ENGINEER

Michael Kourinos, P.E.
Florida License No. 78063
Expiration Date: Feb. 28, 2017

TRITEQ, Inc.
12300 Old Tesson Rd, Suite 300B
St. Louis, MO 63128

Certificate of Authority No. 27425

STRUCTURAL ENGINEER STAMP

MICHAEL N KOURINOS
LICENSE
No 78063
STATE OF
FLORIDA
PROFESSIONAL ENGINEER

3/03/2015

DADE COUNTY STAMP

PRODUCT REVISED
as complying with the Florida Building Code
Acceptance No. 14-0930.20
Expiration Date 12/30/19
By
Miami-Dade Product Control

SABIC Innovative Plastics U.S., LLC - DBA
Insulgard Security Products
1291 RICKETT ROAD BRIGHTON, MI 48116
PHONE (810) 844 - 0776 FAX (810) 844 - 0920

SCALE: FULL
DRAWN BY: NRK
DATE: 08.06.09

REVISIONS:

NO.	DATE	DESCRIPTION
1	12.02.09	No Change
2	08.10.012	2010 Compliance
3	01.25.13	Fasteners
4	03.19.14	No Change
5	03.16.15	REV. TAGS

LOCATION:

44/300 DC FRAMING SYSTEM

SHEET NUMBER: 14 of 19
JOB NUMBER: DCS-02

NOTES:
FOR ALL METAL SCREW CONNECTIONS, A MINIMUM OF THREE (3) THREADS FOR EMBEDMENT IS REQUIRED.

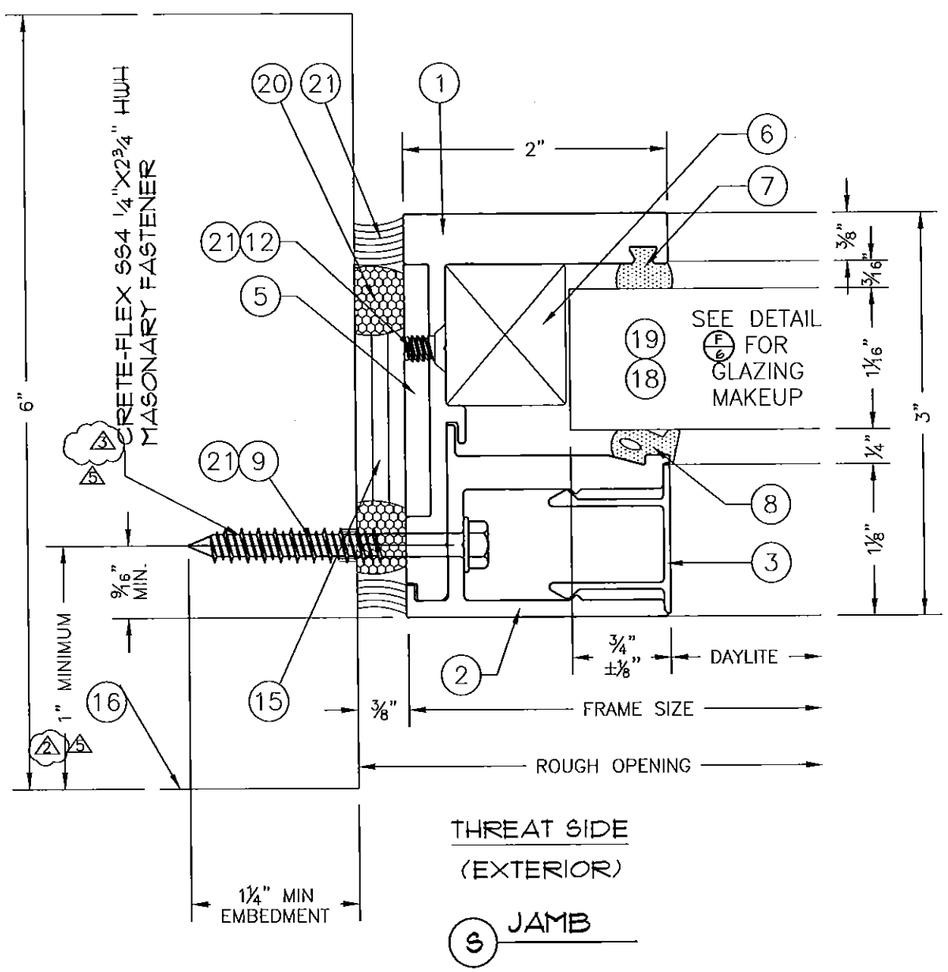

THREAT SIDE
(EXTERIOR)

S JAMB

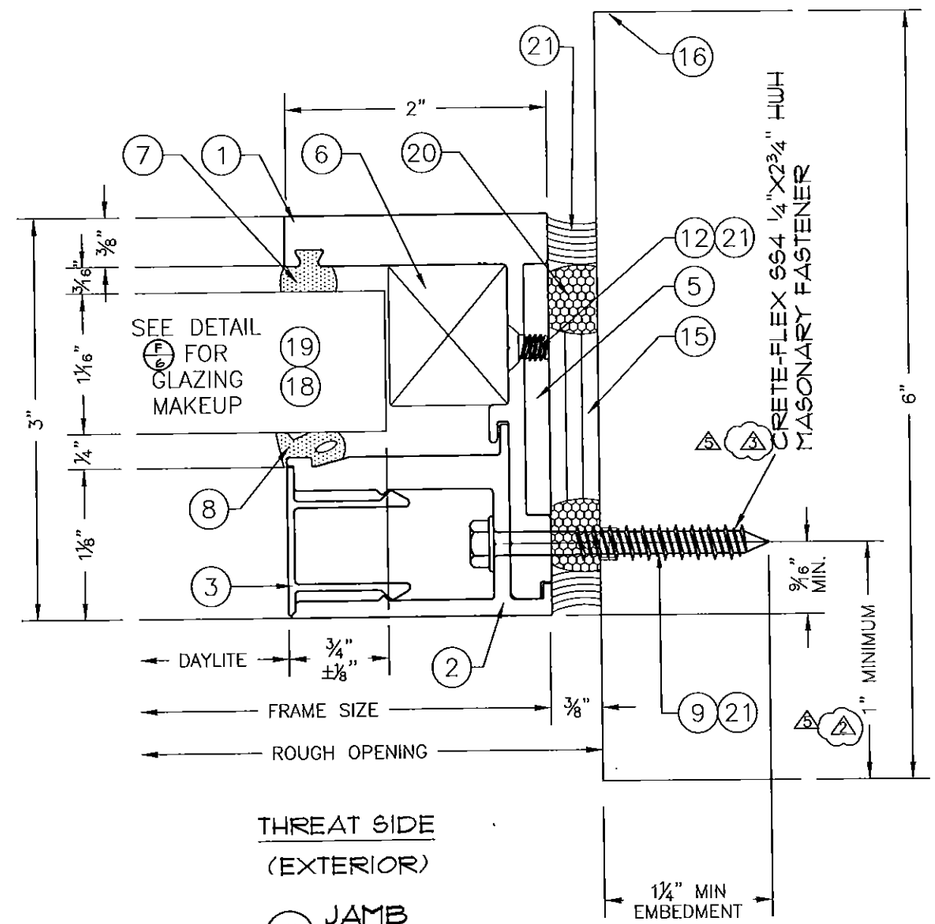

THREAT SIDE
(EXTERIOR)

T JAMB

STRUCTURAL ENGINEER	STRUCTURAL ENGINEER STAMP	DADE COUNTY STAMP
Michael Kourinos, P.E. Florida License No. 78063 Expiration Date: Feb. 28, 2017 TRITEQ, Inc. 12300 Old Tesson Rd, Suite 300B St. Louis, MO 63128 Certificate of Authority No. 27425	MICHAEL N KOURINOS LICENSE No 78063 STATE OF FLORIDA PROFESSIONAL ENGINEER 3/23/2015	PRODUCT REVISED as complying with the Florida Building Code Acceptance No. 14-0930.20 Expiration Date 12/30/19 By Miami-Dade Product Control

SHEET NUMBER: 15 of 19
JOB NUMBER: DCS-02

44/300 DC FRAMING SYSTEM

REVISIONS

NO.	DATE	DESCRIPTION
4	03.16.15	REV. TAGS
3	12.02.09	No Change
2	08.10.012	2012 Compliance
1	01.25.13	Fasteners
0	03.19.14	No Change

SCALE: FULL
DRAWN BY: NRK
DATE: 08.06.09

SABIC Innovative Plastics U.S., LLC - DBA
Insulguard Security Products
1291 RICKETT ROAD BRIGHTON, MI 48116
PHONE (810) 844 - 0776 FAX (810) 844 - 0820

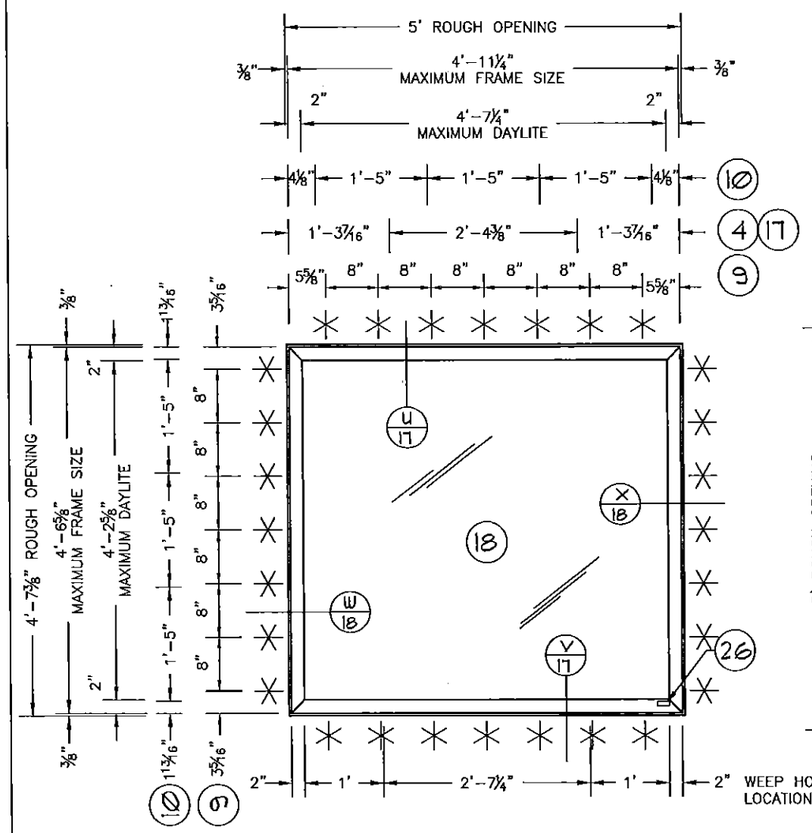

EXTERIOR ELEVATION OF SINGLE UNIT
(WOOD STUDS (2X4) SUBFRAME)
THREAT SIDE

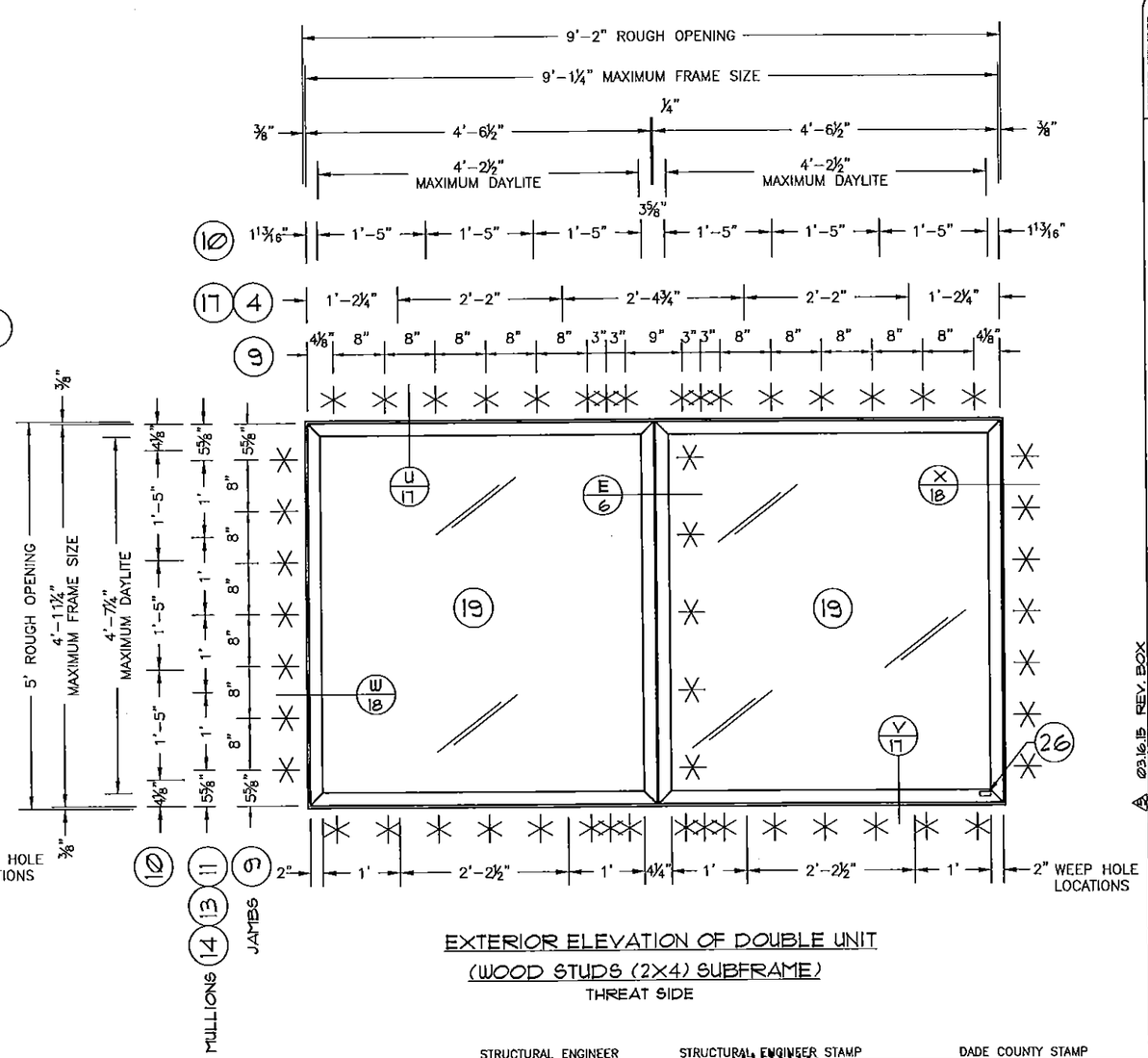

EXTERIOR ELEVATION OF DOUBLE UNIT
(WOOD STUDS (2X4) SUBFRAME)
THREAT SIDE

NOTE:
THESE ARE APPROVED MAXIMUM DIMENSIONS AND PRESSURES, FOR ACTUAL WINDOW DIMENSIONS, SEE SPECIFIC SHOP DRAWINGS FOR EACH JOB.

STRUCTURAL ENGINEER

Michael Kourinos, P.E.
Florida License No. 78063
Expiration Date: Feb. 28, 2017

TRITEQ, Inc.
12300 Old Tesson Rd, Suite 300B
St. Louis, MO 63128

Certificate of Authority No. 27425

STRUCTURAL ENGINEER STAMP

MICHAEL N KOURINOS
LICENSE
No 78063
STATE OF
FLORIDA
PROFESSIONAL ENGINEER

3/23/2015

DADE COUNTY STAMP

PRODUCT REVISED
as complying with the Florida Building Code
Acceptance No 14-0930.20
Expiration Date 12/30/19
By
Miami Dade Product Control

SHEET NUMBER: 16 of 19
JOB NUMBER: DCS-02

44/300 DC FRAMING SYSTEM

REVISIONS: NO.	DATE:	DESCRIPTION
1	12.02.09	No Change
2	08.10.012	No Change
3	0125.13	Call Outs
4	09.19.14	No Change
5	03.16.15	REV. BOX

SCALE: N/A
DRAWN BY: NRK
DATE: 08.06.09

SABIC Innovative Plastics U.S., LLC - DBA
Insulguard Security Products
1291 RICKETT ROAD
BRIGHTON, MI 48116
PHONE (810) 844 - 0776
FAX (810) 844 - 0920

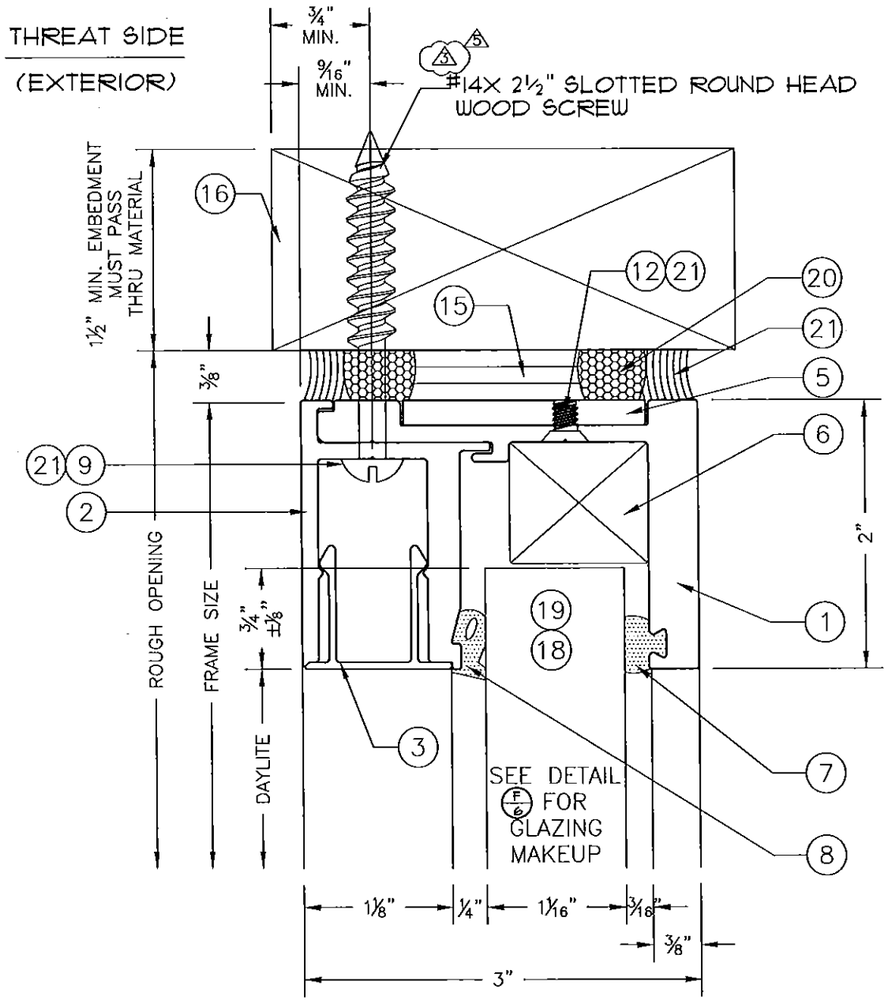

U HEAD

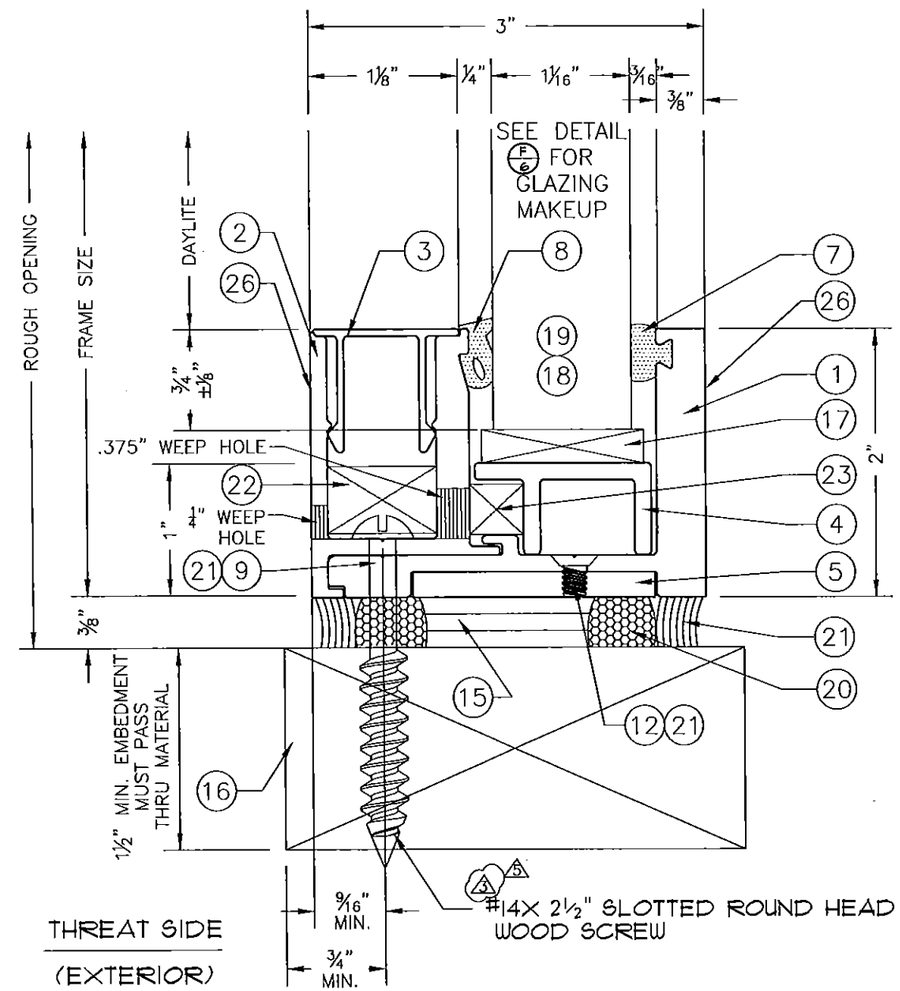

V SILL

NOTES:
FOR ALL METAL SCREW CONNECTIONS, A MINIMUM OF THREE (3) THREADS FOR EMBEDMENT IS REQUIRED.

STRUCTURAL ENGINEER	STRUCTURAL ENGINEER STAMP	DADE COUNTY STAMP
Michael Kourinos, P.E. Florida License No. 78063 Expiration Date: Feb. 28, 2017 TRITEQ, Inc. 12300 Old Tesson Rd, Suite 300B St. Louis, MO 63128 Certificate of Authority No. 27425	MICHAEL N KOURINOS LICENSE No 78063 STATE OF FLORIDA PROFESSIONAL ENGINEER 3/22/2015	PRODUCT REVISED as complying with the Florida Building Code Acceptance No 14-0930.20 Expiration Date 12/30/19 By Miami-Dade Product Control

SHEET NUMBER: 17 of 19
JOB NUMBER: DCS-02

44/300 DC FRAMING SYSTEM

REVISIONS: 03.16.15 REV. TAGS

NO	DATE	DESCRIPTION
1	12.07.09	No Change
2	08.10.012	No Change
3	01.25.13	Fasteners
4	09.19.14	No Change

LOCATION:

SCALE: FULL
DRAWN BY: NRK
DATE: 08.06.09

SABIC Innovative Plastics U.S., LLC - DBA
Insulgard Security Products
1291 RICKETT ROAD BRIGHTON, MI 48116
PHONE (810) 844 - 0776 FAX (810) 844 - 0920

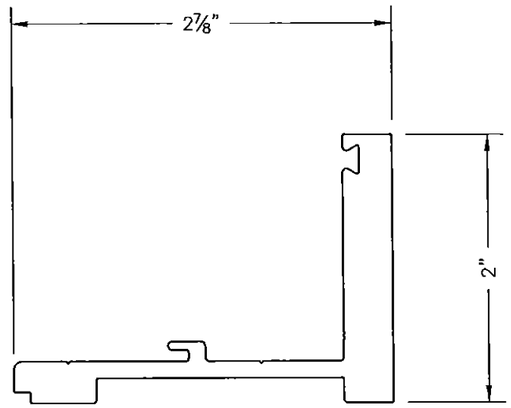

1 EXTRUSION #10-1327
.063" MINIMUM WALL THICKNESS

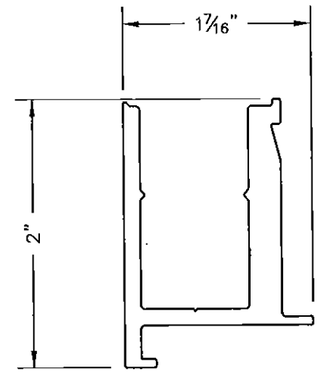

2 EXTRUSION #10-1328
.063" MINIMUM WALL THICKNESS

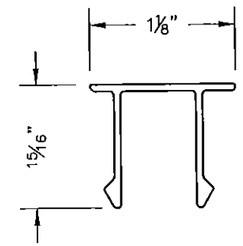

3 EXTRUSION #10-1329
.050" MINIMUM WALL THICKNESS

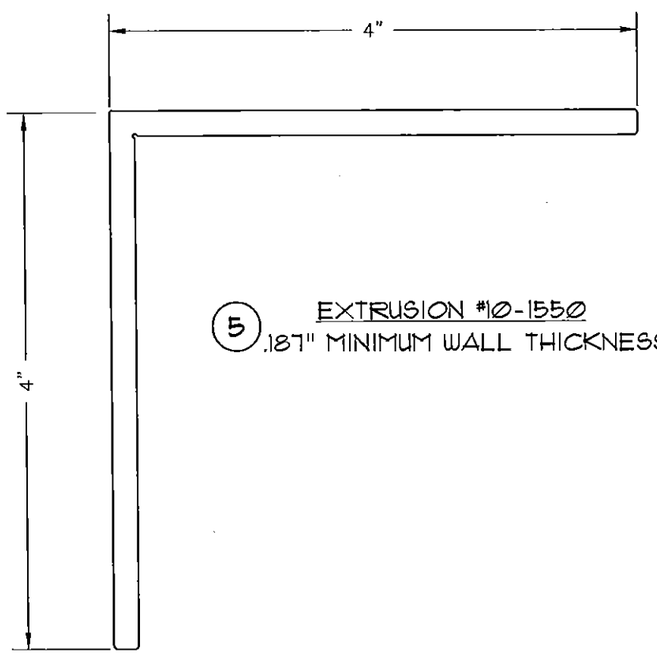

5 EXTRUSION #10-1550
.187" MINIMUM WALL THICKNESS

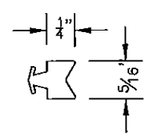

7 G001 SPONGE

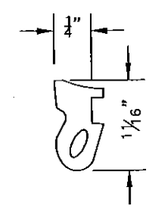

8 G005 WEDGE

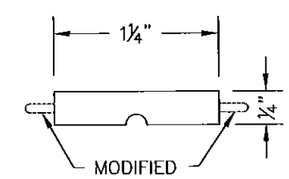

17 SETTING BLOCK

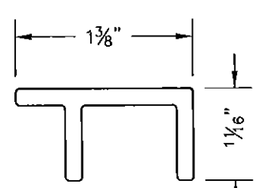

4 EXTRUSION #10-1330
.125" MINIMUM WALL THICKNESS

STRUCTURAL ENGINEER

Michael Kourinos, P.E.
Florida License No. 78063
Expiration Date: Feb. 28, 2017

TRITEQ, Inc.
12300 Old Tesson Rd, Suite 300B
St. Louis, MO 63128

Certificate of Authority No. 27425

STRUCTURAL ENGINEER STAMP

MICHAEL N KOURINOS
LICENSE
No 78063
STATE OF
FLORIDA
PROFESSIONAL ENGINEER

3/03/2015

DADE COUNTY STAMP

PRODUCT REVISED
as complying with the Florida
Building Code
Acceptance No. 14-0930.20
Expiration Date 12/30/19
By
Miami Dade Product Control

SABIC Innovative Plastics U.S., LLC - DBA
Insulgard Security Products
1291 RICKETT ROAD BRIGHTON, MI 48116
PHONE (810) 844 - 0776 FAX (810) 844 - 0920

SCALE: FULL
DRAWN BY: NRK
DATE: 08.06.09

REVISIONS: NO.	DATE	DESCRIPTION
1	12.02.09	No Change
2	08.10.012	No Change
3	01.29.13	NO Change
4	09.19.14	No Change
5	03.16.15	REV. BOX

44/300 DC FRAMING SYSTEM

SHEET NUMBER: 19 of 19
JOB NUMBER: DCS-02