MIAMI-DADE COUNTY
DEPARTMENT OF REGULATORY AND ECONOMIC RESOURCES (RER)
BOARD AND CODE ADMINISTRATION DIVISION

MIAMI-DADE COUNTY
PRODUCT CONTROL SECTION
11805 SW 26 Street, Room 208
T (786) 315-2590 F (786) 315-2599
www.miamidade.gov/economy

NOTICE OF ACCEPTANCE (NOA)

Enclos Corporation
2770 Blue Water Road
Eagan, MN 55121

SCOPE:

This NOA is being issued under the applicable rules and regulations governing the use of construction materials. The documentation submitted has been reviewed and accepted by Miami-Dade County RER - Product Control Section to be used in Miami Dade County and other areas where allowed by the Authority Having Jurisdiction (AHJ).

This NOA shall not be valid after the expiration date stated below. The Miami-Dade County Product Control Section (In Miami Dade County) and/or the AHJ (in areas other than Miami Dade County) reserve the right to have this product or material tested for quality assurance purposes. If this product or material fails to perform in the accepted manner, the manufacturer will incur the expense of such testing and the AHJ may immediately revoke, modify, or suspend the use of such product or material within their jurisdiction. RER reserves the right to revoke this acceptance, if it is determined by Miami-Dade County Product Control Section that this product or material fails to meet the requirements of the applicable building code.

This product is approved as described herein, and has been designed to comply with the Florida Building Code, including the High Velocity Hurricane Zone.

DESCRIPTION: Series "7030 SGP WW Structurally Glazed" Aluminum Window Wall System – L.M.I.

APPROVAL DOCUMENT: Drawing No. **7030 SS LMI**, titled "7030 Series Window Wall - Single Span - Large Missile Impact", sheets 1 through 19, 19A, 19B, 20, 21, 22, 23, 24, 24A and 25 of 25, dated 09/05/14, with revision No. 1 dated 03/07/15 prepared by Bromley-Cook Engineering, Inc., signed and sealed by William D. Cook, P.E., bearing the Miami-Dade County Product Control Revision stamp with the Notice of Acceptance number and expiration date by the Miami-Dade County Product Control Section.

MISSILE IMPACT RATING: Large and Small Missile Impact Resistant

LABELING: Each unit shall bear a permanent label with the manufacturer's name: **Enclos, Chester, VA,** model/series, and the following statement: "Miami-Dade County Product Control Approved", unless otherwise noted herein.

RENEWAL of this NOA shall be considered after a renewal application has been filed and there has been no change in the applicable building code negatively affecting the performance of this product.

TERMINATION of this NOA will occur after the expiration date or if there has been a revision or change in the materials, use, and/or manufacture of the product or process. Misuse of this NOA as an endorsement of any product, for sales, advertising or any other purposes shall automatically terminate this NOA. Failure to comply with any section of this NOA shall be cause for termination and removal of NOA.

ADVERTISEMENT: The NOA number preceded by the words Miami-Dade County, Florida, and followed by the expiration date may be displayed in advertising literature. If any portion of the NOA is displayed, then it shall be done in its entirety.

INSPECTION: A copy of this entire NOA shall be provided to the user by the manufacturer or its distributors and shall be available for inspection at the job site at the request of the Building Official.

This NOA **revises and renews NOA# 10-0525.08** and consists of this page 1 and evidence pages E-1 and E-2, as well as approval document mentioned above.

The submitted documentation was reviewed by **Manuel Perez, P.E.**

MIAMI-DADE COUNTY APPROVED

4/24/15

NOA No. 14-0930.22
Expiration Date: September 09, 2019
Approval Date: April 30, 2015

Enclos Corporation

NOTICE OF ACCEPTANCE: EVIDENCE SUBMITTED

A. DRAWINGS

1. Manufacturer's die drawings and sections.
2. Drawing No **7030 SS LMI**, sheets 1 through 19, 19A, 19B, 20, 21, 22, 23, 24, 24A and 25 of 25, titled "7030 Series Window Wall - Single Span - Large Missile Impact", dated 09/05/14, with revision # 1, dated 03/07/15, prepared by Bromley-Cook Engineering, Inc., signed and sealed by William D. Cook, P.E.

B. TESTS

1. Test reports on: 1) Air Infiltration Test, per FBC, TAS 202-94
   2) Uniform Static Air Pressure Test, Loading per FBC TAS 202-94
   3) Water Resistance Test, per FBC, TAS 202-94
   4) Small Missile Impact Test per FBC, TAS 201-94
   5) Large Missile Impact Test per FBC, TAS 201-94
   6) Cyclic Wind Pressure Loading per FBC, TAS 203-94

   along with marked-up drawings and installation diagram of an aluminum window wall system, prepared by Hurricane Test Laboratory, LLC, Test Report No. **HTL-0434-0616-06**, specimens A, B, C, G, 3, 4, 5, 14, 15, 16 and 17, dated 06/23/08, signed and sealed by Vinu J. Abraham, P.E.
   (Submitted under NOA# 08-0915.12)

C. CALCULATIONS

1. Revised Anchor Calculations, and Structural Analysis, complying with FBC-2007, dated 08/24/08, 01/23/09 and 02/04/10, prepared by Bromley-Cook Engineering, Inc., signed and sealed by William D. Cook, P.E.
   (Submitted under previous NOA# 10-0525.08)
2. Glazing complies with **ASTM E1300-04**

D. QUALITY ASSURANCE

1. Miami–Dade Department of Regulatory and Economic Resources (RER).

E. MATERIAL CERTIFICATIONS

1. Notice of Acceptance No. **11-0624.02** issued to **E.I. DuPont DeNemours & Co.**, Inc. for their "**DuPont SentryGlas® Interlayer**" dated 08/25/11, expiring on 01/14/17.
2. Notice of Acceptance No. **14-0423.15** issued to **Eastman Chemical Company (MA)** for their "**Saflex CP - Saflex and Saflex HP Composite Glass Interlayers with PET Core**" dated 06/19/14, expiring on 12/11/18.

Manuel Perez

Manuel Perez, P.E.
Product Control Examiner
NOA No. 14-0930.22
Expiration Date: September 09, 2019
Approval Date: April 30, 2015

NOTICE OF ACCEPTANCE: EVIDENCE SUBMITTED

F. STATEMENTS

1. Statement letter of conformance, complying with **FBC-5th Edition (2014)**, dated March 30, 2015, issued by Bromley-Cook Engineering, Inc., signed and sealed by William D. Cook, P.E.
2. Statement letter of no financial interest, dated September 5, 2014, issued by Bromley-Cook Engineering, Inc., signed and sealed by William D. Cook, P.E.
   (Submitted under previous NOA# 10-0525.08)
3. Laboratory compliance letter for Test Report No. **HTL-0434-0616.06**, issued by Hurricane Test Laboratory, LLC, dated June 23, 2008, signed and sealed by Vinu J. Abraham, P.E.
   (Submitted under NOA No.08-0915.12)

G. OTHERS

1. Notice of Acceptance No. **10-0525.08**, issued to Enclos Corp. for their Series "**7030 SGP WW Structurally Glazed" Aluminum Window Wall System - L.M.I.**", approved on 08/18/10 and expiring on 09/09/14.

Manuel Perez, P.E.
Product Control Examiner
NOA No. 14-0930.22
Expiration Date: September 09, 2019
Approval Date: April 30, 2015

ENCLOS CORP. FLORIDA HURRICANE SYSTEMS
7030 SERIES SINGLE SPAN WINDOW WALL
4-SIDED STRUCTURALLY GLAZED WITH AND WITHOUT FACE CAPS
LARGE MISSILE IMPACT RESISTANT

GLASS TYPES - HEAT STRENGTHENED

LARGE MISSILE IMPACT
MONOLITHIC / LAMINATED

(A)
- 1/4" CLEAR HEAT STRENGTHENED
- .075" SAFEFLEX CP INTERLYAER BY EASTMAN
- 1/4" CLEAR HEAT STRENGTHENED

(E)
- 1/4" CLEAR HEAT STRENGTHENED
- .090 SENTRYGLAS INTERLAYER BY DUPONT
- 1/4" CLEAR HEAT STRENGTHENED

(N)
- 1/4" CLEAR HEAT STRENGTHENED
- .075" SAFEFLEX CP INTERLYAER BY EASTMAN
- 1/4" CLEAR HEAT STRENGTHENED W/FRIT

GLASS TYPES - TEMPERED

MONOLITHIC / LAMINATED

(At)
- 1/4" CLEAR TEMPERED
- .075" SAFEFLEX CP INTERLYAER BY EASTMAN
- 1/4" CLEAR TEMPERED

(Ct)
- 1/4" CLEAR TEMPERED
- .100 SENTRYGLAS INTERLAYER BY DUPONT
- 1/4" CLEAR TEMPERED

INSULATED / LAMINATED

INNER LITE- 1/4" CLEAR TEMPERED
(Bt)
- .075" SAFEFLEX CP INTERLYAER BY EASTMAN
- 1/4" CLEAR TEMPERED

OUTER LITE- 1/4" CLEAR TEMPERED

INNER LITE- 1/4" CLEAR TEMPERED
(Dt)
- .100 SENTRYGLAS INTERLAYER BY DUPONT
- 1/4" CLEAR TEMPERED

OUTER LITE- 1/4" CLEAR TEMPERED

NOTE: ALL INSULATED/LAMINATED GLASS HAS 1/2" AIR SPACE

GASKET/SETTING BLOCK LIST

	PART # PG-1	70 DURO SILICONE	PRESET GASKET		PART # GSB-1	85 DURO EPDM	SETTING BLOCK FOR 1-3/8" GLASS
	PART # HA-132	70 DURO EPDM	MULLION SEAL GASKET		PART # GSB-2	85 DURO EPDM	SETTING BLOCK FOR INTERMEDIATE HORIZ. 1-3/8" GLASS
	PART # WG-1	70 DURO EPDM	WEDGE GASKET				
	PART # BG-1	70 DURO EPDM	ROLL-ON BULB GASKET		PART # GSB-3	85 DURO EPDM	SETTING BLOCK FOR 9/16" GLASS
	PART # HA-114	70 DURO SILICONE	AIR SEAL BULB GASKET		PART # GSB-4	85 DURO EPDM	SETTING BLOCK FOR INTERMEDIATE HORIZ. 9/16" GLASS
	PART # HA-108	70 DURO SILICONE	AIR SEAL BULB GASKET		PART # BJF-3		9/16" GLASS BUTT JOINT FILLER
	PART # HA-103	70 DURO SILICONE	AIR SEAL BULB GASKET		PART # BJF-4		1 3/8" BUTT JOINT FILLER

DRAWING INDEX

SHEET	DESCRIPTION
1/25	COVER SHEET
2/25	MATERIALS/PARTS LEGEND
3/25	7030 ELEVATIONS
4/25	7030 GLASS SIZE CHARTS (CAPTURED MONO.)
5/25	7030 GLASS SIZE CHARTS (STRUCTURAL MONO.)
6/25	7030 GLASS SIZE CHARTS (CAPTURED I.G.)
7/25	7030 GLASS SIZE CHARTS (STRUCTURAL I.G.)
8/25	7030 MULLION SPAN CHARTS
9/25	DETAILS - HEAD & INT. HORIZ. (CAPTURED)
10/25	DETAILS - SILL & DOOR HEADER (CAPTURED)
11/25	DETAILS - HEAD & SILL STRAP ANCHOR (MONO.)
12/25	DETAILS - HEAD & SILL STRAP ANCHOR (I.G.)
13/25	DETAILS - HEAD & INT. HORIZ. (STRUCTURAL)
14/25	DETAILS - SILLS (STRUCTURAL)
15/25	DETAILS - JAMB & MULL (CAPTURED)
16/25	DETAILS - JAMB & MULL (CAPTURED)
17/25	DETAILS - JAMB & MULL (STRUCTURAL)
18/25	DETAILS - JAMB & MULL (STRUCTURAL)
19/25	DETAILS - DOOR JAMB ANCHOR (CAPTURED)
19A/25	DETAILS - OUTSIDE CORNER (STRUCTURAL)
19B/25	DETAILS - OUTSIDE CORNER (WITH COVERS)
20/25	ANCHORAGE OPTIONS CHART
21/25	ANCHORAGE OPTIONS CHART
22/25	EXTRUSIONS
23/25	EXTRUSIONS
24/25	EXTRUSIONS
24A/25	EXTRUSIONS - CORNER MULLIONS
25/25	CORNER ASSEMBLY DETAILS

ABBREVIATIONS

R.O. = ROUGH OPENING
O.A.F. = OVERALL FRAME
D.L.O. = DAYLITE OPENING
GL. GLASS
L.M.I. = LARGE MISSILE IMPACT
S.M.I. = SMALL MISSILE IMPACT
OPP. = OPPOSITE
MAX. = MAXIMUM
MIN. = MINIMUM
CONC. = CONCRETE

GENERAL NOTES

1. ALUMINUM WINDOW WALL SYSTEM IS TESTED FOR LARGE MISSILE IMPACT. SHUTTERS ARE NOT REQUIRED.
2. FLORIDA BUILDING CODE REQUIREMENTS (HVHZ) REQUIREMENTS: TAS-201 - LARGE IMPACT; TAS-202 - AIR LEAKAGE, WATER PENETRATION & STRUCTURAL PERFORMANCE (WATER @ 20 psf.); TAS-203 - CYCLING
3. THIS SYSTEM MAY BE USED IN CONJUNCTION WITH APPROVED ENTRANCE DOORS.
4. CODE REQUIREMENTS FOR SAFEGUARDS MUST BE OBSERVED.
5. THIS PRODUCT IS DESIGNED TO COMPLY WITH THE HIGH VELOCITY HURRICANE ZONE OF THE FLORIDA BUILDING CODE 5th EDITION (2014)
6. WOOD BUCKS BY OTHERS MUST BE ANCHORED PROPERLY TO TRANSFER LOADS TO THE STRUCTURE. BUCKS SHALL BE DESIGNED BY PROFESSIONAL ENGINEER OF RECORD.
7. OPENINGS SHALL BE CONSTRUCTED IN AN ACCEPTABLE MANNER BY WHICH INSTALLED ALUMINUM FRAMES CAN BE PROPERLY ANCHORED TO THE STRUCTURE ACCORDING TO DETAILS AND CHARTS ON THESE DESIGN DRAWINGS.
8. ANCHORS SHALL BE AS LISTED IN CHARTS AND SPACED AS SPCIFIED ON THESE DESIGN DRAWINGS.
9. ANCHOR EMBEDMENT TO BASE MATERIAL SHALL BE AS SPECIFIED ON THESE DESIGN DRAWINGS (BEYOND WALL DRESSING OR STUCCO)
10. ALL STEEL IN CONTACT WITH ALUMINUM TO BE PAINTED OR COATED. COATING SHALL BE BITUMINOUS OR ASPHALTIC OR SIMILAR.
11. 33% INCREASE IN ALLOWABLE STRESS WAS NOT USED IN THE DESIGN OF THE FRAMING SYSTEM AND ANCHORS.

FOR MIAMI-DADE CO. B.C.C.O.

PRODUCT REVISED
as complying with the Florida Building Code
Acceptance No 14-0930.22
Expiration Date Sept. 4, 2019
By Manuel Perez
Miami Dade Product Control

enclos corp

2770 Blue Water Road
Eagan, MN 55121-1400
Tel. 651-796-6100 • Fax 651-994-6360
Engineering Locations
Eagan, MN • Montreal, QC, CA • Moncton, NB, CA
St. Louis, MO • Manila, PH

REVISIONS

1	3/7/2015 REV'S PER P.C.E.

WILLIAM D. COOK LICENSE No 43904 STATE OF FLORIDA PROFESSIONAL ENGINEER SEAL
MAR 30 2015
Reviewed For Structural Integrity Only

BROMLEY - COOK ENGINEERING, INC.
STRUCTURAL ENGINEERING SERVICES
5440 N.W. 33RD AVENUE SUITE 100
FORT LAUDERDALE, FLORIDA 33309
TEL: (954) 772-4624 FAX: (954) 772-4627
CERT. OF AUTH. #00009124
WILLIAM D. COOK P.E.
FLA P.E. # 43904
FLA S.I. # 2008

Date	Scale
9/05/14	

Drawing No.
7030 SS LMI

Drawing Title
7030 SERIES WINDOW WALL SINGLE SPAN LARGE MISSILE IMPACT

Sheet No.
1/25

chris davy
3/26/2015

BILL OF MATERIALS

1. N/A
2. N/A
3. STEEL BAR 1/4" x 5" (ASTM A36) (PAINTED FOR PROTECTION)
4. STEEL BAR 3/8" x 5 1/2" (ASTM A36)
5. STEEL BAR 7/8" x 5" (ASTM A36) (PAINTED FOR PROTECTION)
6. STEEL BAR 1/4" x 6" (ASTM A36)
7. STEEL BAR 1/2" x 5 1/2" (ASTM A36) (PAINTED FOR PROTECTION)
8. N/A
9. N/A
10. ANTI-BUCKLING CLIPS 4" LONG, @ 6" FROM TOP & BOTTOM AND 24" O.C. MAX
11. 1/4-20 x 3/4" GRADE 5 ZINC PLATED HWH TAPTITE SCREWS (@ HORIZONTAL RAILS U.N.O.)
12. 1/4-20 x 3/4" GRADE 5 ZINC FH PLATED TAPTITE SCREWS, (2) PER HORIZONTAL RAIL
13. #14 x 1 1/2" HWH SMS TYPE A @ HORIZONTAL RAILS (LOCATION VARIES)
14. #14 x 1 1/2" HWH SMS TYPE A @ HORIZONTAL RAILS
15. #14 x 1 1/2" FL HD SMS TYPE A @ HORIZONTAL RAILS
16. 1/4-20 x 3/4" GRADE 5 ZINC PLATED FH TAPTITE SCREWS
17. 1/4-20 x 1" GRADE 5 ZINC PLATED HWH TAPTITE SCREWS
18. #10-16 x 3/4" HWH DRIL-FLEX
19. #10 x 1 1/4" FH SMS
20. 3/8-16 x 1 1/2" FH GRADE 5 BOLTS, TACK WELDED TO STEEL BAR, W/WASHERS & LOCKNUTS @ 36" O.C.
21. #14 x 1" FH SMS, (2) PER ANCHOR, SEAL HEADS
22. 1/4-20 x 3/4" HWH DRIL-FLEX
23. #10 x 3/4" FH SMS
24. 3/8-16 x 1" GRADE 5 ZINC PLATED HWH TAPTITE SCREWS
25. 1/4-20 x 1 1/4" GRADE 5 ZINC PLATED HWH TAPTITE SCREWS
26. SILICONE SEALANT & BACKER ROD DOW CORNING 790, 791 OR 795
27. 3/8" DIA WEEP HOLES @ 1/4 PTS.
28. 3/8" DIA WEEP HOLES @ 1/3 PTS.
29. 3/16" DP. x 3/8" LONG NOTCH @ 1/3 PTS.
30. 7/8" MIN. STRUCTURAL SEALANT DOW-CORNING 983 OR 995
31. N/A
32. 1 3/8" MIN. STRUCTURAL SEALANT DOW-CORNING 983 OR 995
33. 6 1/2" x 4 1/4" x 1/4" EXTRUDED ALUM ANGLE (# 41035) X 5" LG.
34. 5" x 4 1/4" x 1/4" EXTRUDED ALUM TEE (# 41036)
35. 1/4" x 1/2" NORTON TAPE, ADHESIVE TWO SIDES
36. ACCESS NOTCH AT FASTENERS
37. ACCESS HOLES AT FASTENERS
38. SHIMS AS REQUIRED
39. 1/4-20 x 1 1/2" GRADE 5 ZINC PLATED FH TAPTITE SCREWS
40. 3/8-16 x 1 1/2" GRADE 5 ZINC PLATED HWH TAPTITE SCREWS
41. N/A
42. 1" X 5/8" X 1/8" ALUMINUM ANGLE (6063-T6)
43. SILICONE BOOT, 3" LONG, ACROSS MULLION JOINTS DOW-CORNING
44. #10 x 5/8" LOW PROFILE FH SMS
45. 1/8" POP RIVET
46. SEALANT - FULL PERIMETER DOW CORNING 790, 791 OR 795
47. SHOP STRUCTURAL SEAL & BACKER, MIN. OF 1" LG. AT TOP & BOTTOM AND AT APPROX. 24" O.C.
48. SHOP STRUCTURAL SEAL & BACKER, MIN. OF 1" LG. AT ENDS & AT MIDPOINT OF COVER
49. SHOP STRUCTURAL SEAL & BACKER, CONTINUOUS AT BOTTOM SIDE OF COVER
50. N/A
51. #10 x 5/8" HWH SMS
52. 1/4-20 x 2" HWH SMS TYPE A
53. 3/16" x 1/2" LG. WEEP SLOTS @ 1/4 PTS.
54. 6" x 3 1/2" x 1/4" THK. STEEL ANGLE (A36) X 5" LG.
55. #14 x 3/4" FH SMS
56. 1/4-20 x 1" HWH DRILL-FLEX
57. 3/8" DIA WEEP CHECK VALVE
58. N/A
59. END DAM, 4"x 6"x .060 THK. ALUMINUM
60. 3/8-16 x 1" GRADE 5 HEX HD BOLT, WASHER, & LOCKNUT
61. 1/2-13 x 1 3/4" GRADE 5 HEX HD CAP SCREW, WASHERS, & LOCKNUT
62. 1/2-13 x 2" GRADE 5 HEX HD CAP SCREW, WASHERS, & LOCKNUT
63. 1/4-20 x 1/2" GRADE 5 ZINC PLATED FL HD TAPTITE SCREW
64. 2"x 2 1/2"x 1/8" FORMED ALUMINUM ANGLE
65. IN SPANDREL AREAS, 2 1/2" ABOVE AND BELOW HORIZONTAL RAILS & 36" O.C MAX.
66. 3/4" x 3/4" TRIANGULAR ALUMINUM SCREW BLOCK 1" LONG AT HEAD RAIL SCREW POCKETS.
67. 1/2-13 x 1" GRADE 5 ZINC PLATED HWH TAPTITE SCREWS
68. SEAL FASTENER HEADS
69. EXTRUDED ALUMINUM SNAP-IN POCKET CLOSURE (6063-T6)
70. 1/2-13 x 3 3/4" HWH POWER BOLTS, (2) PER ANCHOR
71. N/A
72. 1 1/8" DIA x 1/4" THK ALUMINUM WASHER (6063-T6)
73. 1/2-13 x 2 3/8" GR 8.8 HI-TENSILE TEE BOLT & NUT FOR HALFEN ANCHOR CHANNELS
74. 1/2-13 x 4 3/4" HWH POWER BOLTS, (2) PER ANCHOR
75. 1/2-13 GRADE 5 ZINC PLATED HWH TAPTITE SCREWS
76. N/A
77. N/A
78. N/A
79. N/A
80. 1/4-20 x 1" GRADE 5 ZINC PLATED FH TAPTITE SCREWS
81. @ FAR SIDE OF END JAMB
82. 5/8-11 x 1 3/4" GRADE 8.8 HI-TENSILE TEE BOLT FOR HALFEN SERIES ANCHOR CHANNELS
83. 1/4" THK x 1 9/16" SQ EXTRUDED ALUMINUM SERRATED WASHER
84. 1/4-20 x 1 1/2" HWH DRILL-FLEX
85. N/A
86. N/A
87. 3/8-16 x 4" GRADE 5 HWH POWER BOLT
88. STEEL BAR 3/8" x 5 1/2" (A36) (PAINTED FOR PROTECTION)
89. 1/2-13 x 3" GRADE 5 HEX HD BOLT, WASHER, & LOCKNUT
90. 3/8-16 x 2" GRADE 5 ZINC PLATED HWH TAPTITE SCREW
91. 1/2-16 x 4" HWH POWERS CO. WEDGE BOLTS, (2) PER ANCHOR
92. 1/2" DIA. HWH POWERS CO. WEDGE BOLTS, (2) PER ANCHOR
93. HALFEN EMBED. MUST BE ENGINEERED FOR SUBSTRATE CONDITIONS.
94. SCHEDULE 80 ALUM. PIPE SLEVE 1 3/8" LONG (6063-T6)

FOR MIAMI-DADE CO. B.C.C.O.

PRODUCT REVISED
as complying with the Florida
Building Code
Acceptance No 14-0930.22
Expiration Date Sept. 9, 2019
By Manuel Perez
Miami Dade Product Control

enclos corp
2770 Blue Water Road
Eagan, MN 55121-1400
Tel. 651-796-6100 • Fax 651-994-6360
Engineering Locations
Eagan, MN • Montreal, QC, CA • Moncton, NB, CA
St. Louis, MO • Manila, PH

REVISIONS

1	3/7/2015 REV'S PER P.C.E.

WILLIAM D. COOK STATE OF FLORIDA LICENSE No. 43904 PROFESSIONAL ENGINEER
MAR 30 2015
Reviewed For Structural Integrity Only

BROMLEY • COOK ENGINEERING, INC.
STRUCTURAL ENGINEERING SERVICES
5440 N.W. 33RD AVENUE SUITE 105
FORT LAUDERDALE, FLORIDA 33309
TEL: (954) 772-4624 FAX: (954) 772-4634
CERT. OF AUTH. #00006124
WILLIAM D. COOK P.E.
FLA P.E. # 43904
FLA S.I. # 2008

Date	Scale
9/05/14	

Drawing No.
7030 SS LMI

Drawing Title
7030 SERIES WINDOW WALL
SINGLE SPAN
LARGE MISSILE IMPACT

Sheet No.
2/25

chris davy
3/26/2015

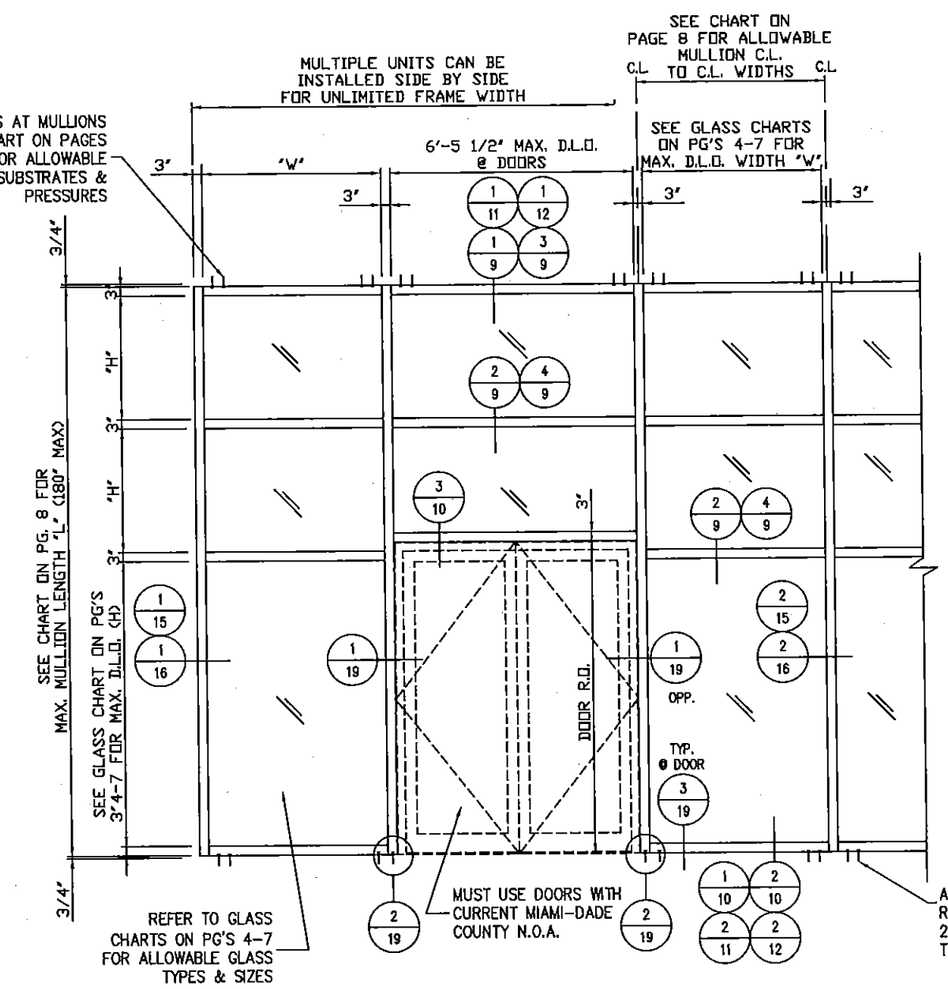

1/3 ELEVATION (VIEWED FROM EXTERIOR) CAPTURED (W/ FACE CAPS)

2/3 ELEVATION (VIEWED FROM EXTERIOR) STRUCTURALLY GLAZED OPTION

3/3 TYPICAL SECTION

NOTES:

1: DETERMINE DESIGN WIND LOAD REQUIREMENT BASED ON WIND VELOCITY, BLDG. HEIGHT, WIND ZONE. USING APPLICABLE ASCE 7 STANDARDS.

2: SEE CHARTS ON SHEETS 4–7 FOR ALLOWABLE DESIGN LOAD CAPACITY FOR DESIRED GLASS SIZE.

3: SEE CHARTS ON SHEET 8 FOR ALLOWABLE DESIGN LOAD CAPACITY OF MULLION HEIGHTS AND MODULE WIDTHS. THE CAPACITY SHOULD EQUAL OR EXCEED THE DESIGN LOAD GIVEN FOR THE SPECIFIC PROJECT.

4: SEE CHARTS ON SHEETS 20 & 21 TO SELECT ANCHOR OPTION AND SUBSTRATE WITH CAPACITY EQUAL TO OR GREATER THAN DESIGN LOAD GIVEN FOR THE SPECIFIC PROJECT.

5. LOWEST VALUE OF ALL CHARTS SHALL APPLY FOR THE ENTIRE ASSEMBLY

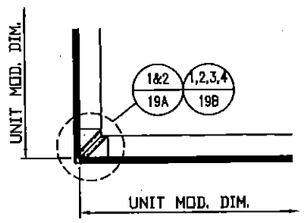

4/3 PLAN AT OUTSIDE CORNER

NOTE:

FOR STRUCTURALLY GLAZED SYSTEM OPTION, SEE FLORIDA BUILDING CODE SECTION 2415 FOR REQUIREMENTS.

FOR MIAMI–DADE CO. B.C.C.O.

PRODUCT REVISED
as complying with the Florida Building Code
Acceptance No 14-0930.22
Expiration Date Sept 9, 2019
By Manuel Perez
Miami Dade Product Control

enclos corp
2770 Blue Water Road
Eagan, MN 55121-1400
Tel. 651-796-6100 • Fax 651-994-6360
Engineering Locations
Eagan, MN • Montreal, QC, CA • Moncton, NB, CA
St. Louis, MO • Manila, PH

REVISIONS

1	3/7/2015 REV'S PER P.C.E.

WILLIAM D. COOK LICENSE No 43904 STATE OF FLORIDA PROFESSIONAL ENGINEER SEAL: MAR 3 1 2015
Reviewed For Structural Integrity Only

BROMLEY • COOK ENGINEERING, INC.
STRUCTURAL ENGINEERING SERVICES
5440 N.W. 33RD AVENUE SUITE 100
FORT LAUDERDALE, FLORIDA 33309
TEL: (954) 772-4624 FAX: (954) 772-4635
CERT. OF AUTH. #00009124
WILLIAM D. COOK P.E.
FLA P.E. # 43904
FLA S.I. # 2008

Date	Scale
9/05/14	

Drawing No. 7030 SS LMI

Drawing Title: 7030 SERIES WINDOW WALL SINGLE SPAN LARGE MISSILE IMPACT

Sheet No. 3/25

chris dery
3/28/2015

CAPTURED SYSTEM (9/16" GLASS)

MAX. DESIGN PRESSURES (P.S.F.) FOR VARIOUS GLASS TYPES						
GLASS WD. D.L.O. (W)	GLASS HGT. D.L.O. (H)	GLASS TYPES (MONOLITHIC LAMINATED – L.M.I.)				
		A	E	At	Ct	N
48" 52" 54" 57"	60"	+90, −143 +90, −143 +90, −143 +90, −143	+90, −90	+110, −130	+110, −130	+110, −130
48" 52" 54" 57"	72"	+90, −143 +90, −143 +90, −143 +90, −143				+110, −130
48" 52" 54" 57"	78"	+90, −130 +90, −130 +90, −130 +90, −130				
48" 52" 54" 57"	84"	+90, −130 +90, −130 +90, −130 +90, −130				
48" 52" 54" 57"	90"	+90, −130 +90, −130 +90, −130 +90, −130	+90, −90	+110, −130	+110, −130	
48" 52" 54" 57"	102"	+90, −125 +90, −120 +90, −115 +90, −110				
48" 52" 54" 57"	114"	+90, −100 +90, −95 +90, −90 +90, −90				

TESTED GLASS (MONOLITHIC):		
A	57" X 92" 57" X 114"	+90 / −143 +90 / −90
E	57" X 90"	+90 / −90
N	57" X 90"	+110 / −130
At	57" X 90"	+110 / −130
Ct	57" X 90"	+110 / −130

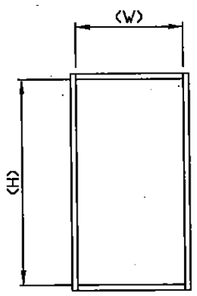

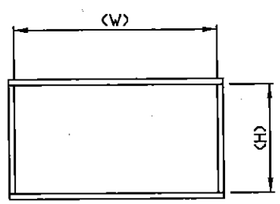

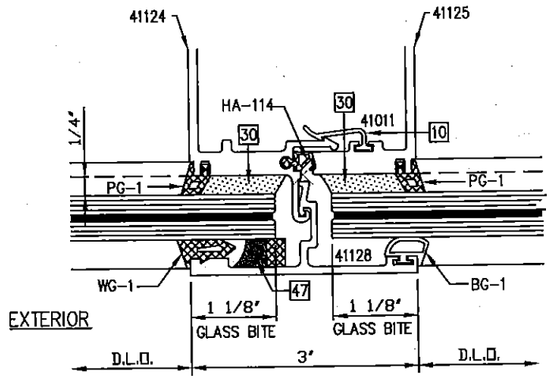

1/4 GLAZING DETAIL
9/16" CAPTURED GLASS
@ TYP. VERTICAL MULLION

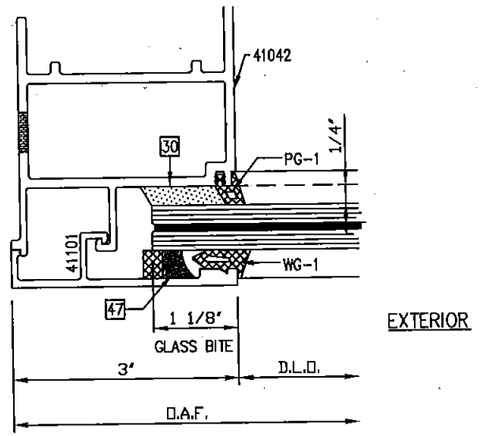

2/4 GLAZING DETAIL
9/16" CAPTURED GLASS @ JAMB

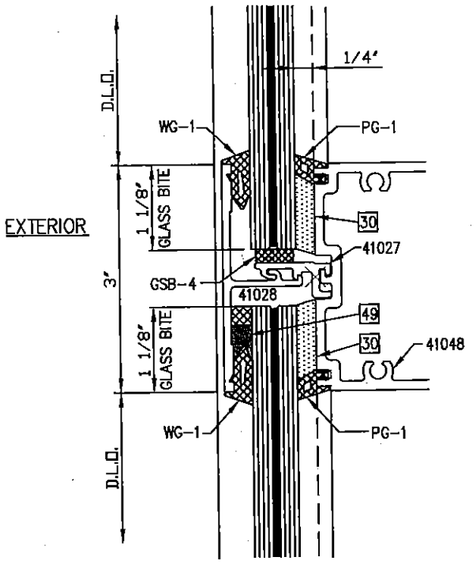

3/4 GLAZING DETAIL
9/16" CAPTURED GLASS
@ INTERMEDIATE HORIZONTAL

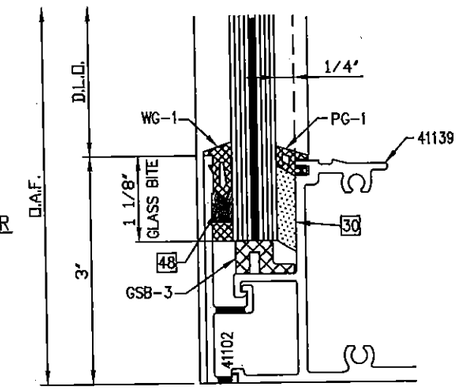

4/4 GLAZING DETAIL
9/16" CAPTURED GLASS
TYP. @ HEAD & SILL

FOR MIAMI-DADE CO. B.C.C.O.

PRODUCT REVISED
as complying with the Florida
Building Code
Acceptance No 14-0930.22
Expiration Date Sept 9, 2019
By Manuel Perez
Miami Dade Product Control

enclos corp
2770 Blue Water Road
Eagan, MN 55121-1400
Tel. 651-796-6100 • Fax 651-994-6360
Engineering Locations
Eagan, MN • Montreal, QC, CA • Moncton, NB, CA
St. Louis, MO • Manila, PH

REVISIONS

1	3/7/2015 REV'S PER P.C.E.

BROMLEY · COOK ENGINEERING, INC.
STRUCTURAL ENGINEERING SERVICES
5440 N.W. 33RD AVENUE SUITE 110
FORT LAUDERDALE, FLORIDA 33309
TEL: (954) 772-4624 FAX: (954) 772-4624
CERT. OF AUTH. #00009124
WILLIAM D. COOK P.E.
FLA P.E. # 43904
FLA S.I. # 2008

WILLIAM D. COOK LICENSE No. 43904 STATE OF FLORIDA PROFESSIONAL ENGINEER SEAL
MAR 3 0 2015
Revised For Structural Integrity Only

Date	Scale
9/05/14	

Drawing No.
7030 SS LMI

Drawing Title
7030 SERIES WINDOW WALL
SINGLE SPAN
LARGE MISSILE IMPACT

Sheet No.
4/25

chris doy
3/26/2015

STRUCTURALLY GLAZED SYSTEM (9/16" GLASS)

MAX. DESIGN PRESSURES (P.S.F.) FOR VARIOUS GLASS TYPES					
GLASS WD. D.L.O. (W)	GLASS HGT. D.L.O. (H)	GLASS TYPES (MONOLITHIC LAMINATED – L.M.I.)			
		A	At	Ct	N
48" 52" 54" 57"	60"	+90, −90	+110, −130	+110, −130	+110, −130
48" 52" 54" 57"	72"				+110, −130
48" 52" 54" 57"	78"				
48" 52" 54" 57"	84"				
48" 52" 54" 57"	90"	+90, −90	+110, −130	+110, −130	

TESTED GLASS (MONOLITHIC):		
A	57" X 90"	+90 / −90
N	57" X 72"	+110 / −130
At & Ct	57" X 90"	+110 / −130

SILICONE JOINT WIDTH REQ'D. FOR STRUCTURAL GLAZING			
GLASS WIDTH (D.L.O. MAX.)	WIND PRESSURE (MAX.)	JOINT DEPTH X WIDTH (MIN.)	MULLION WIDTH REQ'D. (MIN.)
40"	130	1/4" X 7/8"	STANDARD 3" WIDE MULLION
44"	120	1/4" X 7/8"	STANDARD 3" WIDE MULLION
48"	110	1/4" X 7/8"	STANDARD 3" WIDE MULLION
52"	100	1/4" X 7/8"	STANDARD 3" WIDE MULLION
57"	90	1/4" X 7/8"	STANDARD 3" WIDE MULLION
57"	130	1/4" X 1 3/8"	4" WIDE MULLION

DOW CORNING 983 OR 995 STRUCTURAL SILICONE SEALANT

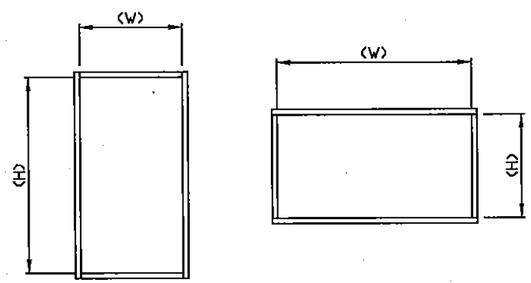

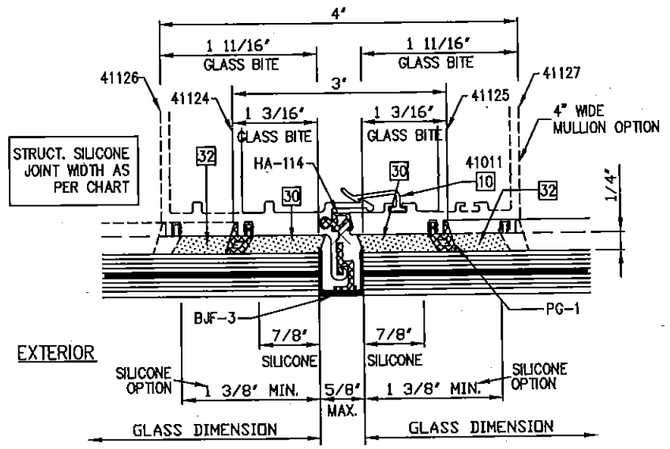

1/5 GLAZING DETAIL (BUTT JT. W/ GASKET)
9/16" STRUCTURAL GLAZED
@ TYP. VERTICAL MULLION

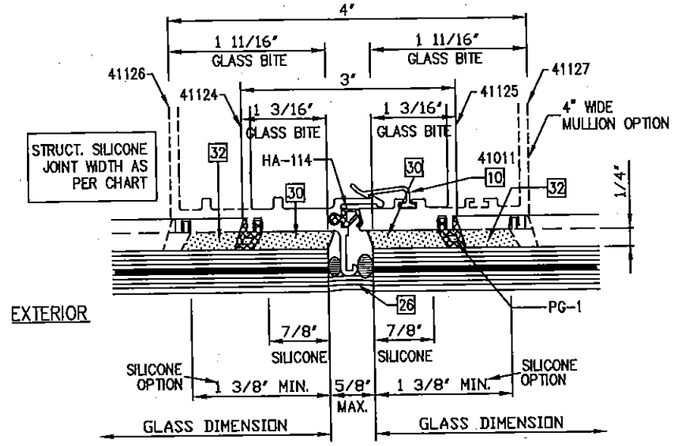

2/5 GLAZING DETAIL (SILICONE BUTT JT.)
9/16" STRUCTURAL GLAZED
@ TYP. VERTICAL MULLION

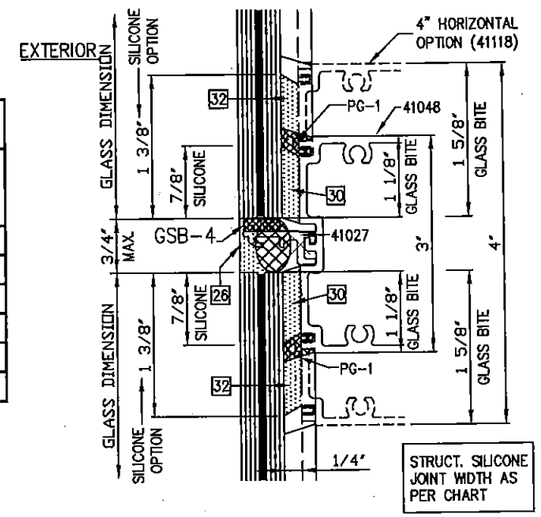

3/5 GLAZING DETAIL (SILICONE BUTT JT.)
9/16" STRUCTURAL GLAZED
@ INTERMEDIATE HORIZONTAL

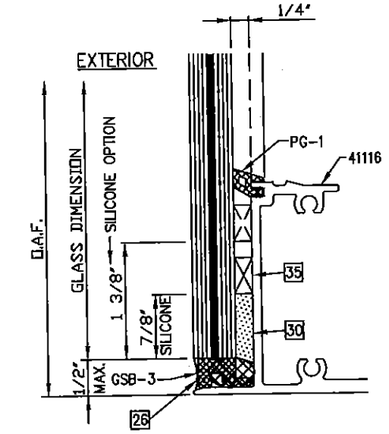

4/5 GLAZING DETAIL
9/16" STRUCTURAL GLAZED
TYP. @ HEAD & SILL

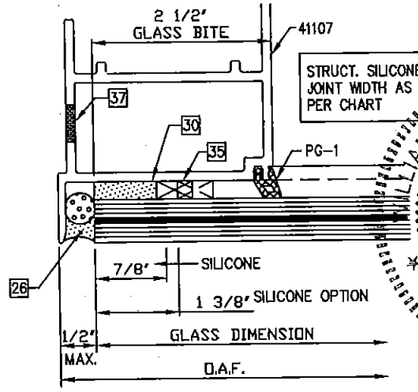

5/5 GLAZING DETAIL
9/16" STRUCTURAL GLAZED
@ JAMB

FOR MIAMI-DADE CO. B.C.C.O.

PRODUCT REVISED
as complying with the Florida Building Code
Acceptance No 14-0930.22
Expiration Date Sept 9, 2019
By Manuel Perez
Miami Dade Product Control

enclos corp
2770 Blue Water Road
Eagan, MN 55121-1400
Tel. 651-796-6100 • Fax 651-994-6360
Engineering Locations
Eagan, MN • Montreal, QC, CA • Moncton, NB, CA
St. Louis, MO • Manila, PH

REVISIONS

1	3/7/2015 REV'S PER P.C.E.

BROMLEY - COOK ENGINEERING, INC.
STRUCTURAL ENGINEERING SERVICES
5440 N.W. 33RD AVENUE SUITE 108
FORT LAUDERDALE, FLORIDA 33309
TEL: (954) 772-4624 FAX: (954) 772-4624
CERT. OF AUTH. #00009124
WILLIAM D. COOK P.E.
FLA P.E. # 43904
FLA SI. # 2008

WILLIAM D. COOK LICENSE No 43904 STATE OF FLORIDA PROFESSIONAL ENGINEER SEAL
MAR 30 2015
Reviewed For Structural Integrity Only

Date	Scale
9/05/14	

Drawing No.
7030 SS LMI

Drawing Title
7030 SERIES WINDOW WALL SINGLE SPAN LARGE MISSILE IMPACT

Sheet No.
5/25

chris dey
3/26/2015

CAPTURED SYSTEM (1 3/8" GLASS)

MAX. DESIGN PRESSURES (P.S.F.) FOR VARIOUS GLASS TYPES			
GLASS WD. D.L.O. (W)	GLASS HGT. D.L.O. (H)	GLASS TYPES (INSULATED LAMINATED – L.M.I.)	
		Bt	Dt
48" 52" 54" 57"	90"	+110, −130 +110, −130 +110, −130 +110, −130	+110, −130 +110, −130 +110, −130 +110, −130

TESTED GLASS (LAMINATED/INSULATED)		
Bt & Dt	57" X 90"	+110 / −130

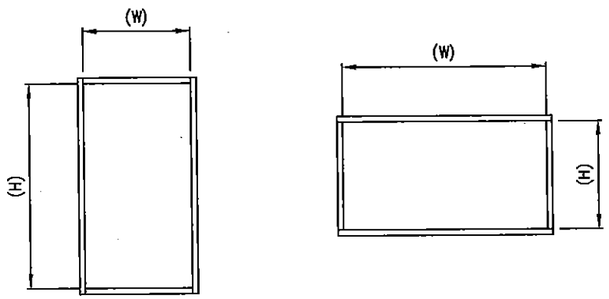

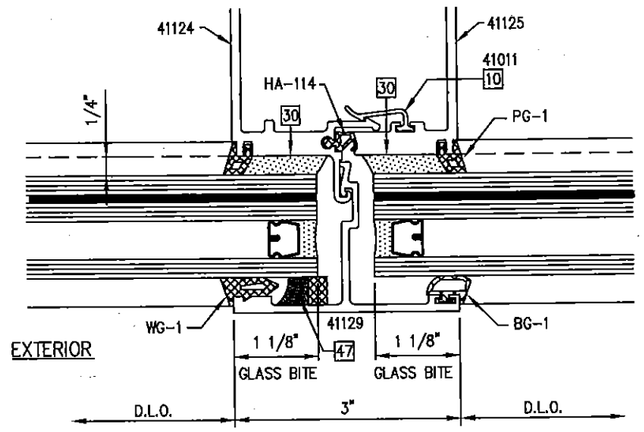

1/6 GLAZING DETAIL
1 3/8" CAPTURED GLASS
@ TYP. VERTICAL MULLION

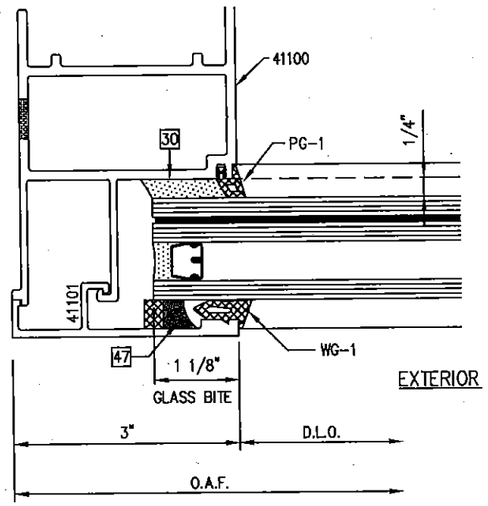

2/6 GLAZING DETAIL
1 3/8" CAPTURED GLASS @ JAMB

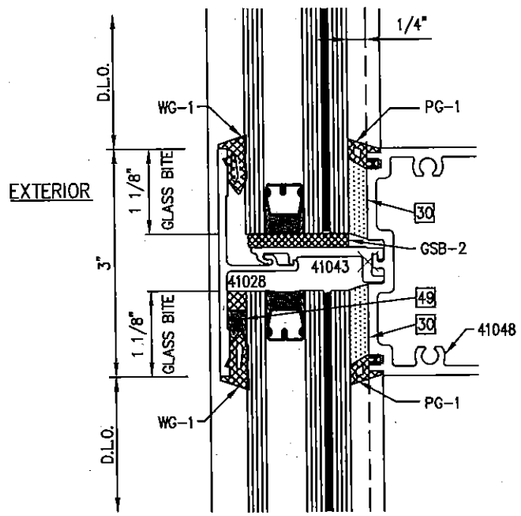

3/6 GLAZING DETAIL
1 3/8" CAPTURED GLASS
@ INTERMEDIATE HORIZONTAL

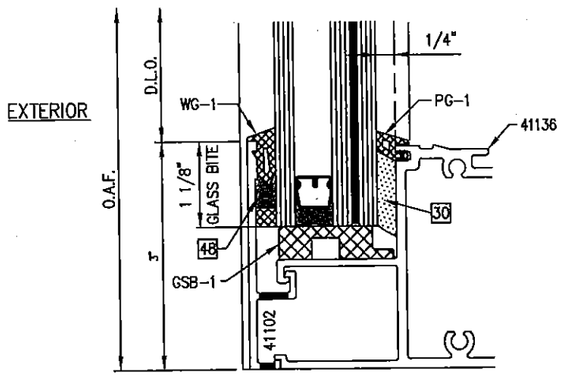

4/6 GLAZING DETAIL
1 3/8" CAPTURED GLASS
TYP. @ HEAD & SILL

FOR MIAMI-DADE CO. B.C.C.O.

PRODUCT REVISED
as complying with the Florida
Building Code
Acceptance No 14-0930.22
Expiration Date Sept 9, 2019
By Manuel Perez
Miami Dade Product Control

enclos corp
2770 Blue Water Road
Eagan, MN 55121-1400
Tel. 651-796-6100 • Fax 651-994-6350
Engineering Locations
Eagan, MN • Montreal, QC, CA • Moncton, NB, CA
St. Louis, MO • Manila, PH

REVISIONS

1	3/7/2015 REV'S PER P.C.E.

WILLIAM D. COOK LICENSE No 43904 STATE OF FLORIDA PROFESSIONAL ENGINEER
Seal:
MAR 3 2015
Reviewed For Structural Integrity Only

BROMLEY · COOK ENGINEERING, INC.
STRUCTURAL ENGINEERING SERVICES
5440 N.W. 33RD AVENUE SUITE 160
FORT LAUDERDALE, FLORIDA 33309
TEL. (954) 772-4624 FAX: (954) 772-4627
CERT. OF AUTH. #00009124
WILLIAM D. COOK P.E.
FLA P.E. # 43904
FLA S.I. # 2008

Date	Scale
9/05/14	

Drawing No.
7030 SS LMI

Drawing Title
7030 SERIES WINDOW WALL
SINGLE SPAN
LARGE MISSILE IMPACT

Sheet No.
6/25

chris dovy
3/26/2015

STRUCTURALLY GLAZED SYSTEM (1 3/8" GLASS)

MAX. DESIGN PRESSURES (P.S.F.) FOR VARIOUS GLASS TYPES			
GLASS WD. D.L.O. (W)	GLASS HGT. D.L.O. (H)	GLASS TYPES (LAMINATED/INSULATED – L.M.I.) Bt	Dt
48" 52" 54" 57"	60"	+110, –130	+110, –130
48" 52" 54" 57"	72"		
48" 52" 54" 57"	78"		
48" 52" 54" 57"	84"		
48" 52" 54" 57"	90"	+110, –130	+110, –130

TESTED GLASS (INSULATED):		
Bt	57" X 90"	+110 / –130
Dt	57" X 90"	+110 / –130

SILICONE JOINT WIDTH REQ'D. FOR STRUCTURAL GLAZING			
GLASS WIDTH (D.L.O. MAX.)	WIND PRESSURE (MAX.)	JOINT DEPTH X WIDTH (MIN.)	MULLION WIDTH REQ'D. (MIN.)
40"	130	1/4" X 7/8"	STANDARD 3" WIDE MULLION
44"	120	1/4" X 7/8"	STANDARD 3" WIDE MULLION
48"	110	1/4" X 7/8"	STANDARD 3" WIDE MULLION
52"	100	1/4" X 7/8"	STANDARD 3" WIDE MULLION
57"	90	1/4" X 7/8"	STANDARD 3" WIDE MULLION
57"	130	1/4" X 1 3/8"	4" WIDE MULLION

DOW CORNING 983 OR 995 STRUCTURAL SILICONE SEALANT

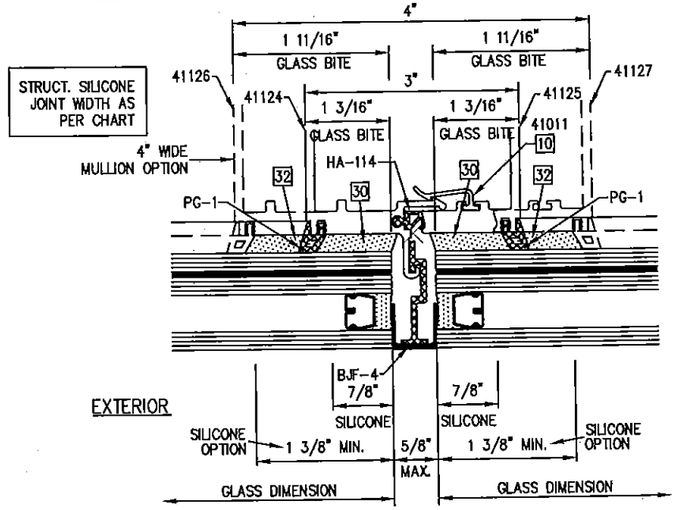

1/7 GLAZING DETAIL (BUTT JT. W/ GASKET)
1 3/8" STRUCTURAL GLAZED
@ TYP. VERTICAL MULLION

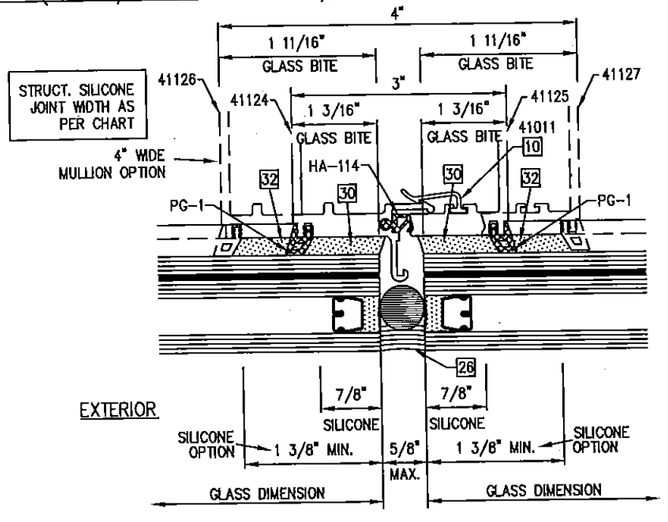

2/7 GLAZING DETAIL (SILICONE BUTT JOINT)
1 3/8" STRUCTURAL GLAZED
@ TYP. VERTICAL MULLION

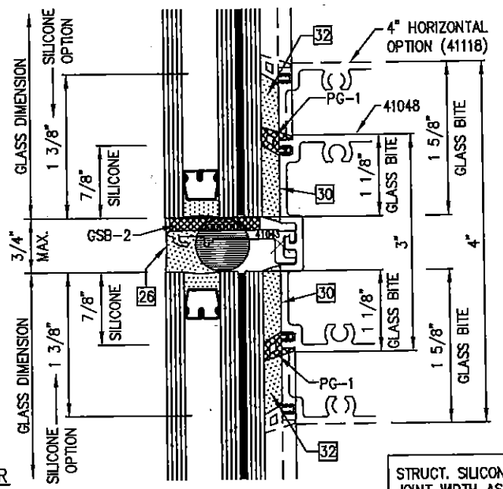

3/7 GLAZING DETAIL
1 3/8" STRUCTURAL GLAZED
@ INTERMEDIATE HORIZONTAL

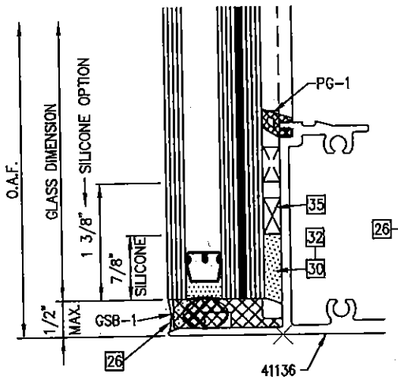

4/7 GLAZING DETAIL
1 3/8" STRUCTURAL GLAZED
@ TYP. SILL

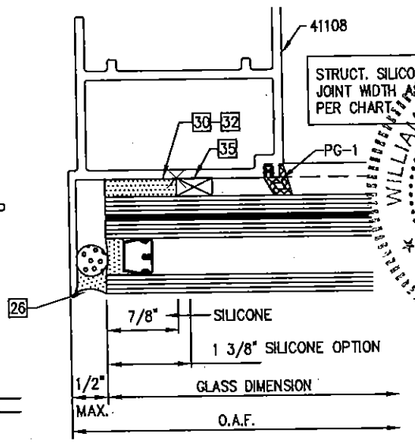

5/7 GLAZING DETAIL
1 3/8" STRUCTURAL GLAZED
@ JAMB

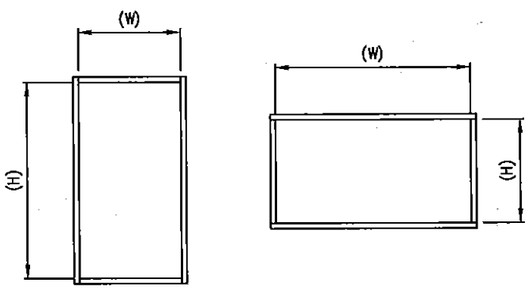

FOR MIAMI-DADE CO. B.C.C.O.

PRODUCT REVISED
as complying with the Florida
Building Code
Acceptance No 14-0930.22
Expiration Date Sept 9, 2019
By Manuel Perez
Miami Dade Product Control

enclos corp

2770 Blue Water Road
Eagan, MN 55121-1400
Tel. 651-796-6100 • Fax 651-994-6360
Engineering Locations
Eagan, MN • Montreal, QC, CA • Moncton, NB, CA
St. Louis, MO • Manila, PH

REVISIONS

1	3/7/2015 REV'S PER P.C.E.

WILLIAM D. COOK LICENSE No 43904 STATE OF FLORIDA PROFESSIONAL ENGINEER SEAL MAR 3 2015 Reviewed For Structural Integrity Only

BROMLEY - COOK ENGINEERING, INC.
STRUCTURAL ENGINEERING SERVICES
5440 N.W. 33RD AVENUE SUITE 100
FORT LAUDERDALE, FLORIDA 33309
TEL: (954) 772-4624 FAX: (954) 772-4624
CERT. OF AUTH. #00009124
WILLIAM D. COOK P.E.
FLA P.E. # 43904
FLA S.I. # 2008

Date	Scale
9/05/14	

Drawing No.
7030 SS LWI

Drawing Title
7030 SERIES WINDOW WALL
SINGLE SPAN
LARGE MISSILE IMPACT

Sheet No.
7/25

chris devy
3/26/2015

MAX. DESIGN PRESSURES (P.S.F.) FOR VARIOUS MULLION OPTIONS

MODULE WD. "W" C.L. TO C.L.	MULLION HGT. "H"	MULLION OPTIONS							
		MULLION TYPE #1	MULLION TYPE #2	MULLION TYPE #3	MULLION TYPE #4	JAMB TYPE #5	JAMB TYPE #6	JAMB TYPE #7	JAMB TYPE #8
54" 57" 60" 64" 68" 71"	96"	+130, −130	+130, −130	+90, −143	+118, −118	+130, −130	+90, −143	+118, −118	+130, −130
54" 57" 60" 64" 68" 71"	102"								
54" 57" 60" 64" 68" 71"	114"								
54" 57" 60" 64" 68" 71"	120"	+130, −130 +125, −125 +125, −125 +115, −115 +110, −110 +110, −110	+130, −130 +130, −130 +130, −130 +125, −125 +120, −120 +120, −120			+130, −130 +125, −125 +125, −125 +115, −115 +110, −110 +110, −110			
54" 57" 60" 64" 68" 71"	132"								
54" 57" 60" 64" 68" 71"	144"			+90, −143 +90, −143 +90, −140 +90, −131 +90, −123 +90, −118			+90, −143		
54" 57" 60" 64" 68" 71"	180"				+118, −118 +110, −110 +106, −106 +99, −99 +93, −93 +90, −90			+118, −118 +118, −118 +118, −118 +118, −118 +118, −118 +118, −118	+130, −130 +130, −130 +130, −130 +130, −130 +130, −130 +130, −130

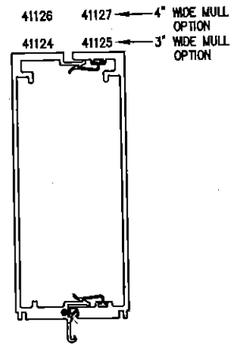

MULLION TYPE #1
NO REINFORCING
ALUMINUM Ixx = 25.33in⁴
Sxx = 6.78in³
(3" WIDE MULLION)
ALUMINUM Ixx = 31.17in⁴
Sxx = 8.34in³
(4" WIDE MULLION)

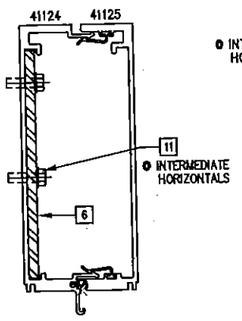

MULLION TYPE #2
41124/41125 (W/ STL. REINFORCING)
6 1/4" X 6" STEEL BAR (1 PCS.)
ALUMINUM Ixx = 38.38in⁴
Sxx = 12.68in³
NOTE:
TOTAL "I" VALUE IS ALUM. "Ix–x" PLUS CONVERTED STEEL "Ix–x" VALUE

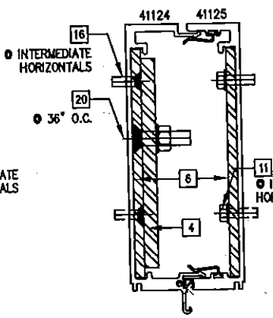

MULLION TYPE #3
41124/41125 (W/ STL. REINFORCING)
6 1/4" X 6" STEEL BAR (2 PCS.) &
4 3/8" X 5 1/2" STEEL BAR (1 PC.)
ALUMINUM Ixx = 64.50in⁴
Sxx = 19.83in³

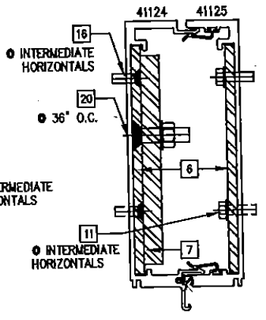

MULLION TYPE #4
41124/41125 (W/ STL. REINFORCING)
6 1/4" X 6" STEEL BAR (2 PCS.) &
7 1/2" X 5 1/2" STEEL BAR (1 PC.)
ALUMINUM Ixx = 71.54in⁴
Sxx = 22.18in³

NOTE:
JAMB MULLIONS SHOWN HAVE THE LOWEST "I" VALUE. JAMB MULLION OPTIONS FOR CAPTURED GLASS OPTIONS (9/16" & 1 3/8" THICKNESS) ARE SHOWN ON EXTRUSION SHEET 23.

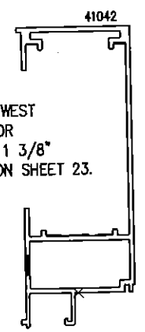

JAMB TYPE #5
NO REINFORCING
ALUMINUM Ixx = 20.68in⁴
Sxx = 5.24in³

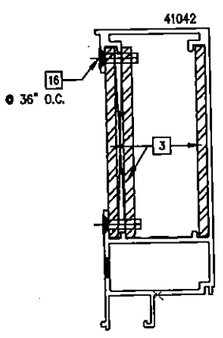

JAMB TYPE #6
41042 (W/ STL. REINFORCING)
3 1/4" X 5" STEEL BAR (3 PCS.)
ALUMINUM Ixx = 43.34in⁴
Sxx = 14.31in³
NOTE:
TOTAL "I" VALUE IS ALUM. "Ix–x" PLUS CONVERTED STEEL "Ix–x" VALUE

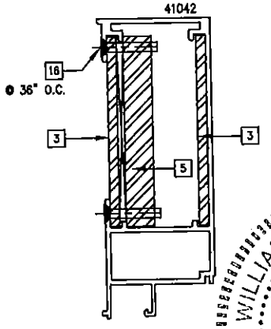

JAMB TYPE #7
41042 (W/ STL. REINFORCING)
3 1/4" X 5" STEEL BAR (2 PCS.)
5 7/8" X 5" STEEL BAR (1 PC.)
ALUMINUM Ixx = 62.22in⁴
Sxx = 21.85in³

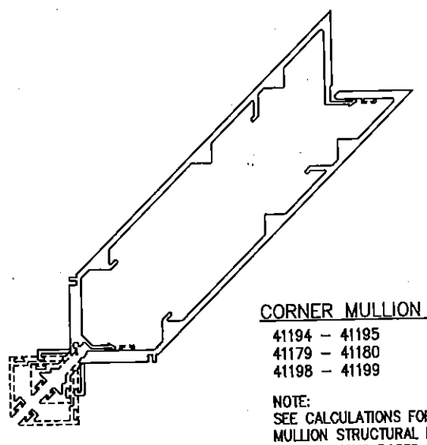

CORNER MULLION TYPE #8
41194 – 41195
41179 – 41180
41198 – 41199
NOTE:
SEE CALCULATIONS FOR CORNER MULLION STRUCTURAL PROPERTIES, CALCULATIONS BASED ON EQUAL MODULE WIDTHS

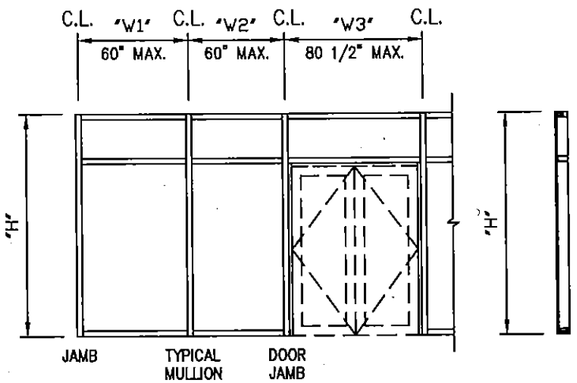

GENERAL NOTES:

- "H" = MAXIMUM MULLION SPAN
- "W1", "W2" & "W3" = C.L. TO C.L. SPACING
- JAMB "W" = $\frac{\text{"W1"}}{2}$
- MULLION "W" = $\frac{\text{"W1"} + \text{"W2"}}{2}$
- DOOR JAMB "W" = $\frac{\text{"W2"} + \text{"W3"}}{2}$
- FOR SINGLE SPAN MAXIMUM DEFL. = L/180 OR 1"
- WHEN STEEL REINF. IS USED, LENGTH OF STEEL SHALL BE MULLION LENGTH MINUS (–) 9" (CENTERED IN SPAN)
- SPANS ARE LIMITED BY MAXIMUM TESTED END REACTIONS

FOR MIAMI–DADE CO. B.C.C.O.

PRODUCT REVISED
as complying with the Florida Building Code
Acceptance No 14-0930.22
Expiration Date Sept 9 2019
By Manuel Perez
Miami Dade Product Control

enclos corp
2770 Blue Water Road
Eagan, MN 55121-1400
Tel. 651-796-6100 • Fax 651-994-6360
Engineering Locations
Eagan, MN • Montreal, QC, CA • Moncton, NB, CA
St. Louis, MO • Manilla, PH

REVISIONS
1 3/7/2015 REV'S PER P.C.E.

BROMLEY · COOK ENGINEERING, INC.
STRUCTURAL ENGINEERING CONSULTANTS
5440 N.W. 33RD AVENUE SUITE 110
FORT LAUDERDALE, FLORIDA 33309
TEL: (954) 772-4624 FAX: (954) 772-4627
CERT. OF AUTH. #00009124
WILLIAM D. COOK P.E.
FLA P.E. # 43904
FLA S.I. # 2008

WILLIAM D. COOK LICENSE No 43904 STATE OF FLORIDA PROFESSIONAL ENGINEER SEAL
MAR 3 0 2015
Reviewed for Structural Integrity Only

Date	Scale
9/05/14	

Drawing No. 7030 SS LMI

Drawing Title: 7030 SERIES WINDOW WALL SINGLE SPAN LARGE MISSILE IMPACT

Sheet No. 8/25

chris davy
3/28/2013

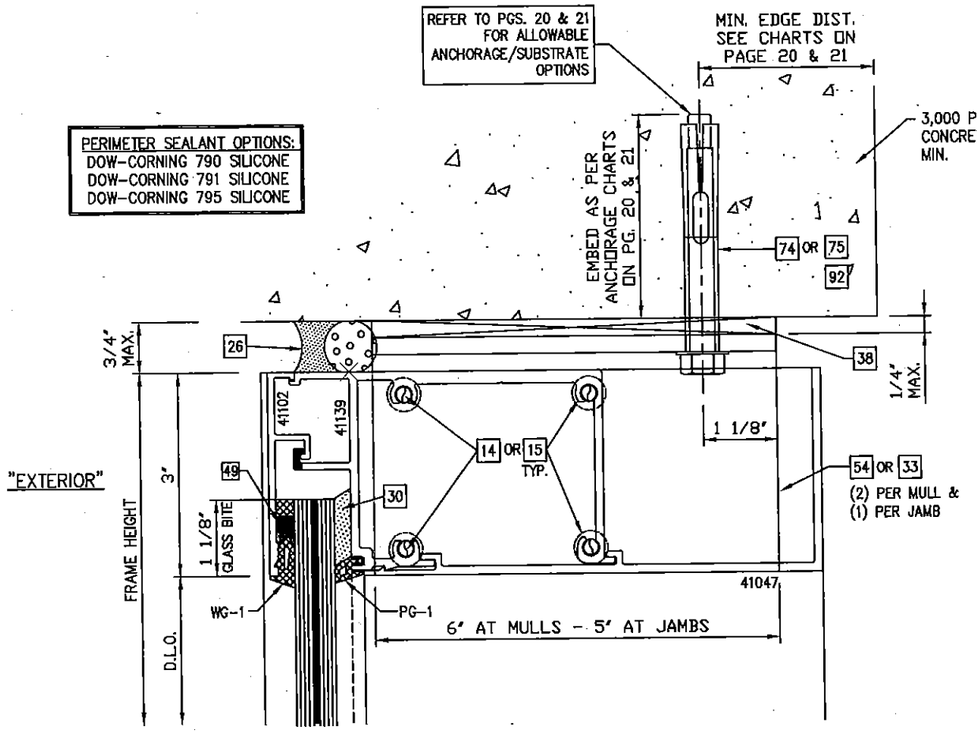

1/9 HEAD DETAIL – 9/16" CAPTURED GLASS WITH "L" CLIP ANCHORAGE OPTION

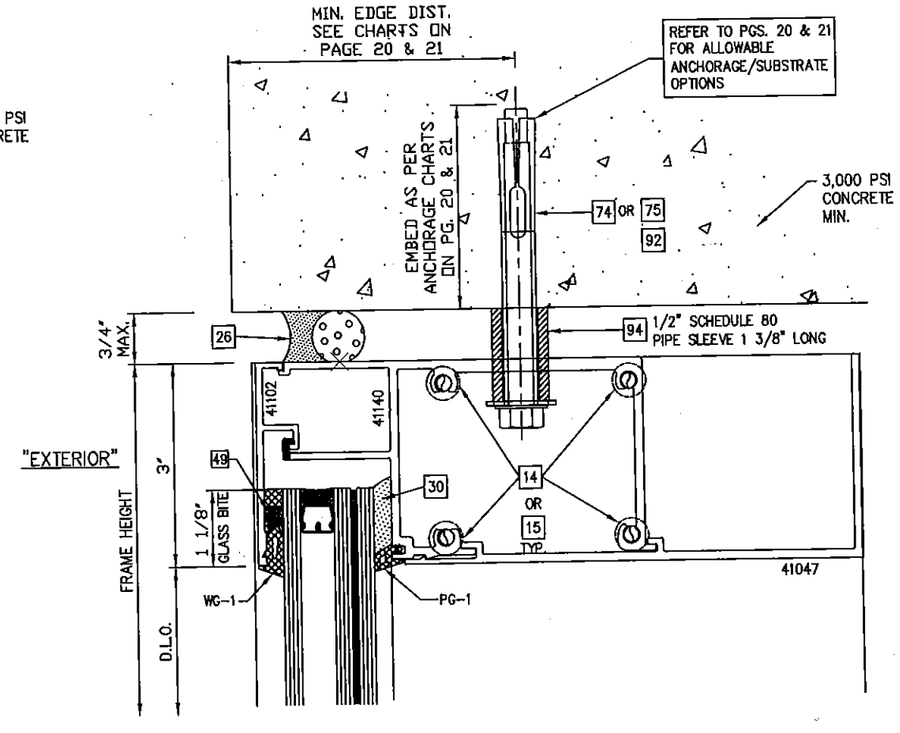

3/9 HEAD DETAIL – 1 3/8" CAPTURED GLASS WITH THRU CAN ANCHORAGE OPTION

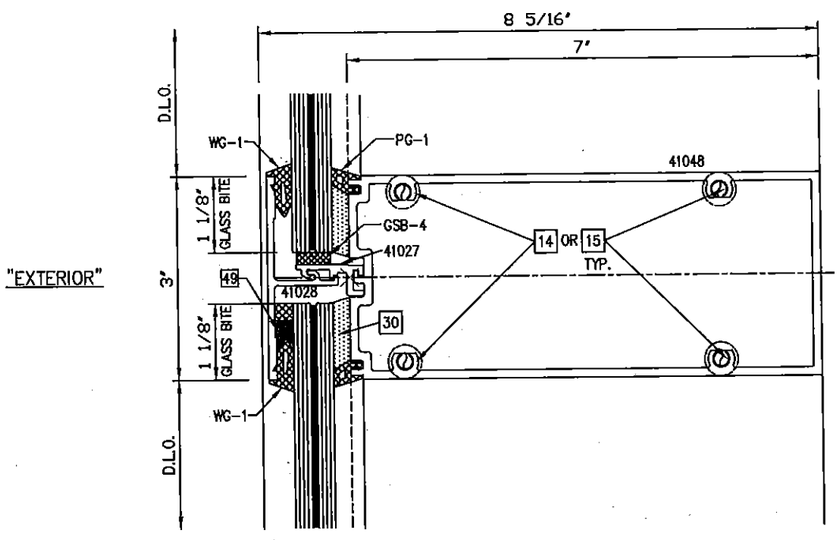

2/9 INTERMEDIATE HORIZONTAL DETAIL – 9/16" CAPTURED GLASS

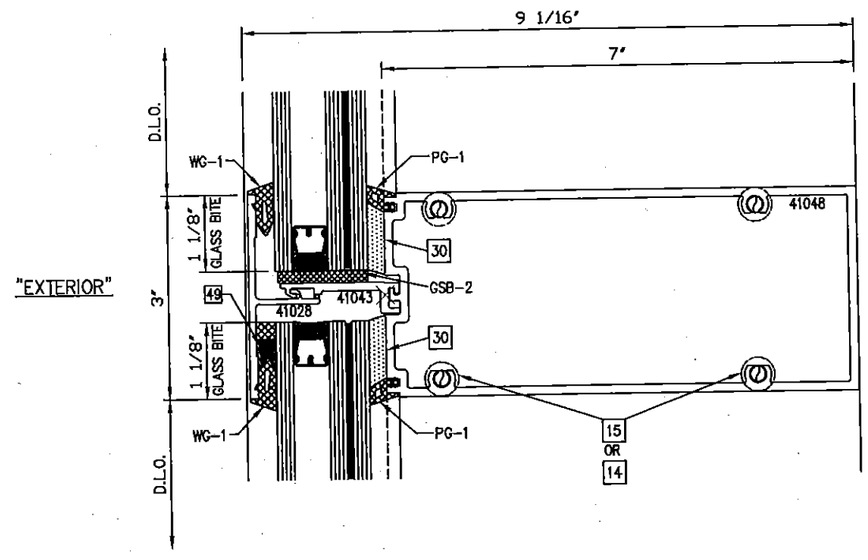

4/9 INTERMEDIATE HORIZONTAL DETAIL – 1 3/8" CAPTURED GLASS

FOR MIAMI-DADE CO. B.C.C.O.

PRODUCT REVISED
as complying with the Florida Building Code
Acceptance No 14-0930.22
Expiration Date Sept. 9, 2019
By Manuel Perez
Miami Dade Product Control

enclos corp

2770 Blue Water Road
Eagan, MN 55121-1400
Tel. 651-796-6100 • Fax 651-994-6360
Engineering Locations
Eagan, MN • Montreal, QC, CA • Moncton, NB, CA
St. Louis, MO • Manila, PH

REVISIONS

1	3/7/2015 REV'S PER P.C.E.

WILLIAM D. COOK LICENSE No 43904 STATE OF FLORIDA PROFESSIONAL ENGINEER
SEAL:
MAR 30 2015
Reviewed For Structural Integrity Only

BROMLEY - COOK ENGINEERING INC.
STRUCTURAL ENGINEERING SERVICES
5440 N.W. 33RD AVENUE SUITE 100
FORT LAUDERDALE, FLORIDA 33309
TEL: (954) 772-4624 FAX: (954) 772-4634
CERT. OF AUTH. #00009124
WILLIAM D. COOK P.E.
FLA P.E. # 43904
FLA S.I. # 2008

Date	Scale
9/05/14	

Drawing No.
7030 SS LMI

Drawing Title
7030 SERIES WINDOW WALL
SINGLE SPAN
LARGE MISSILE IMPACT

Sheet No.
9/25

chris davy
3/26/2015

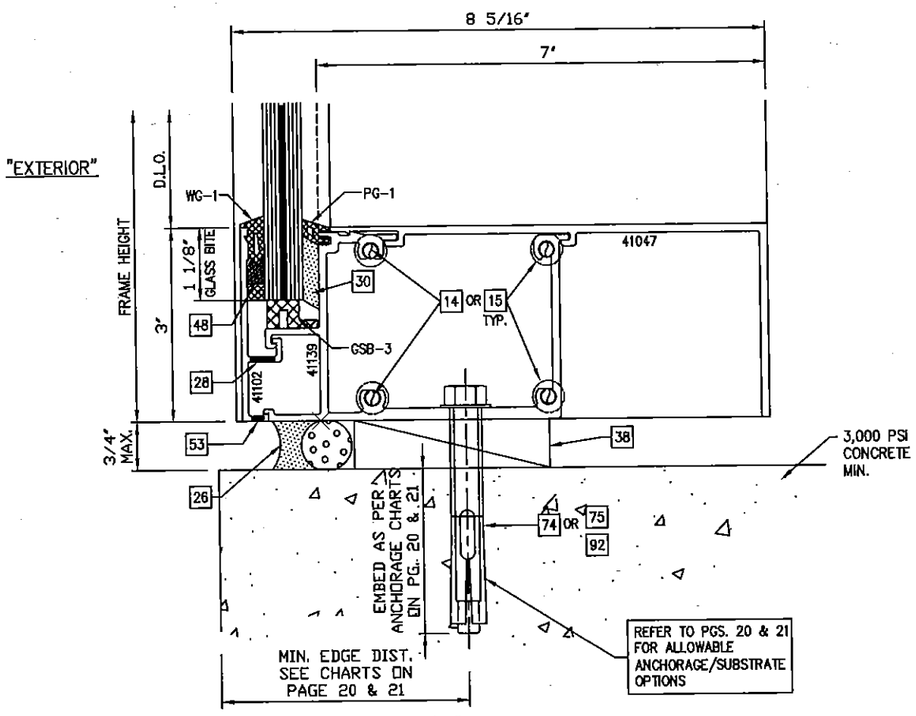

1/10 SILL DETAIL – 9/16" CAPTURED GLASS WITH THRU CAN ANCHORAGE OPTION

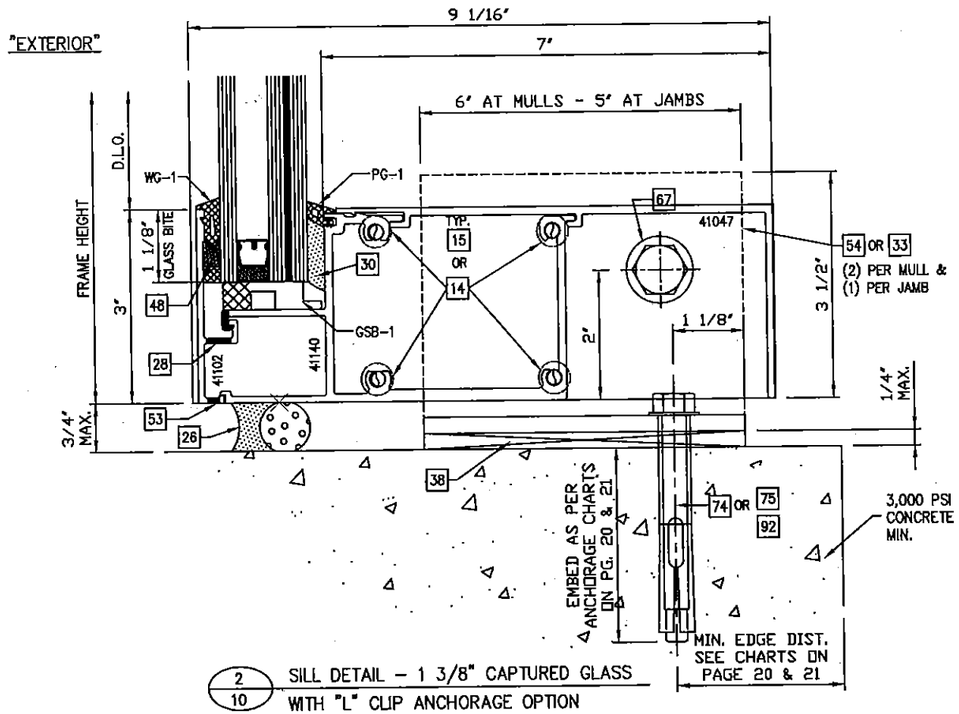

2/10 SILL DETAIL – 1 3/8" CAPTURED GLASS WITH "L" CLIP ANCHORAGE OPTION

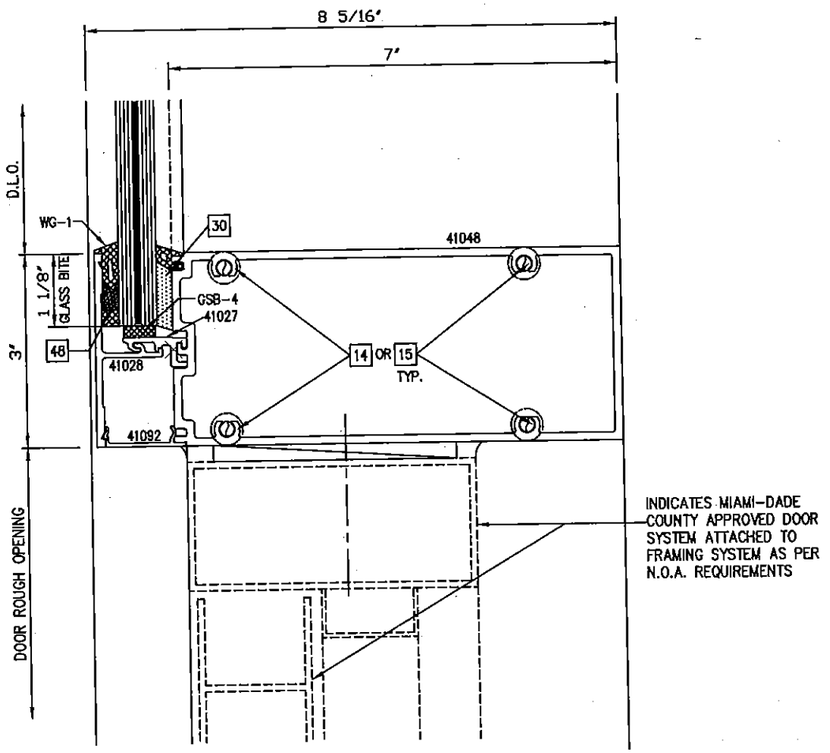

3/10 INTERMEDIATE RAIL DETAIL – 9/16" CAPTURED GLASS @ DOOR HEAD
1 3/8" GLASS SIMILAR

FOR MIAMI-DADE CO. B.C.C.O.

PRODUCT REVISED
as complying with the Florida Building Code
Acceptance No 14-0930.22
Expiration Date Sept 01, 2019
By Manuel Perez
Miami Dade Product Control

enclos corp
2770 Blue Water Road
Eagan, MN 55121-1400
Tel. 651-796-6100 • Fax 651-994-6360
Engineering Locations
Eagan, MN • Montreal, QC, CA • Moncton, NB, CA
St. Louis, MO • Manila, PH

REVISIONS

1	3/7/2015 REV'S PER P.C.E.

WILLIAM D. COOK LICENSE No 43904 STATE OF FLORIDA PROFESSIONAL ENGINEER
SEAL:
MAR 30 2015
Reviewed For Structural Integrity Only

BROMLEY - COOK ENGINEERING, INC.
STRUCTURAL ENGINEERING SERVICES
5440 N.W. 33RD AVENUE SUITE 110
FORT LAUDERDALE, FLORIDA 33309
TEL: (954) 772-4824 FAX: (954) 772-4826
CERT. OF AUTH. #00009124
WILLIAM D. COOK P.E.
FLA P.E. # 43904
FLA S.I. # 2008

Date	Scale
9/05/14	

Drawing No.
7030 SS LMI

Drawing Title
7030 SERIES WINDOW WALL
SINGLE SPAN
LARGE MISSILE IMPACT

Sheet No.
10/25

3/26/2015 chris davy

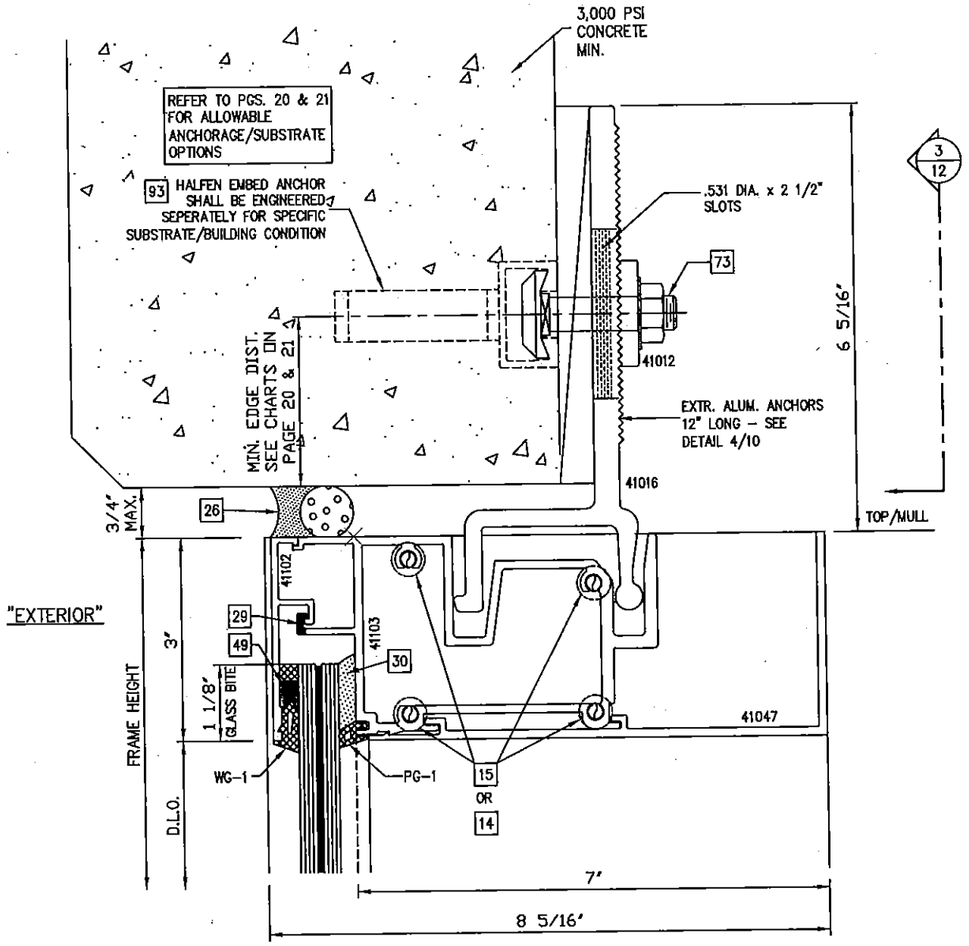

1/11 HEAD DETAIL – 9/16" CAPTURED GLASS WITH ALUM. STRAP ANCHORAGE OPTION

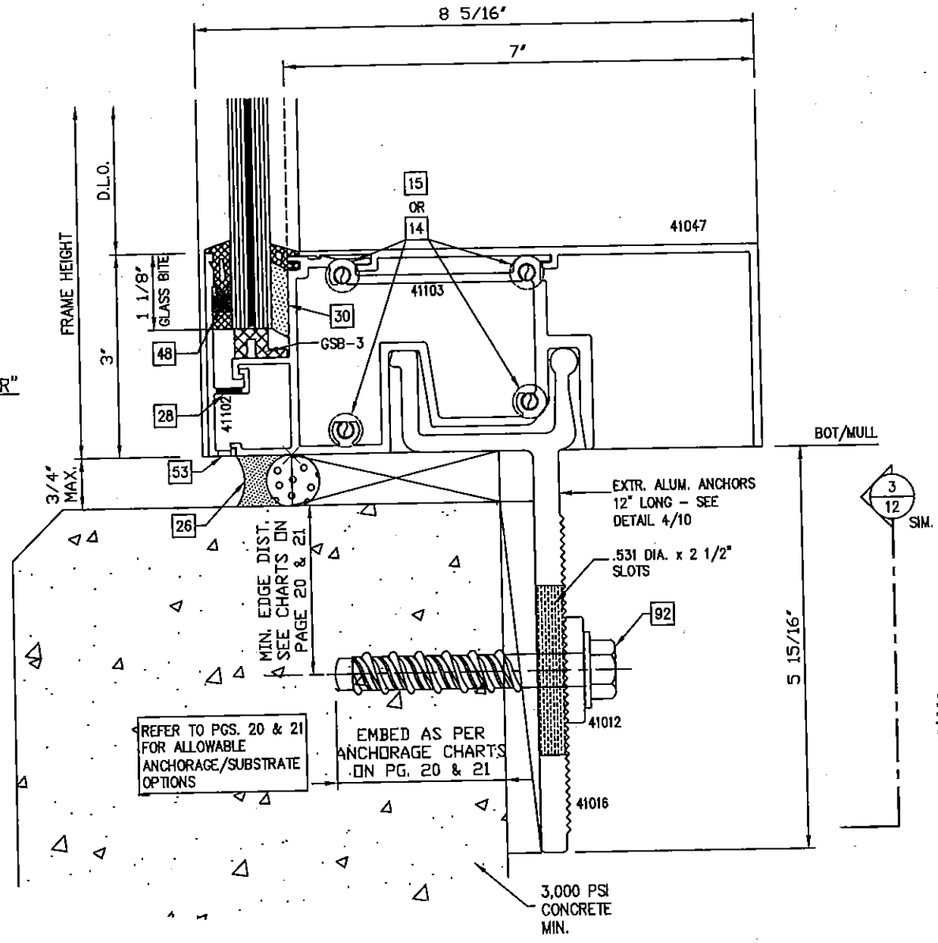

2/11 SILL DETAIL – 9/16" CAPTURED GLASS WITH ALUM. STRAP ANCHORAGE OPTION

FOR MIAMI-DADE CO. B.C.C.O.

PRODUCT REVISED
as complying with the Florida
Building Code
Acceptance No 14-0930.22
Expiration Date Sept. 9, 2019
By Manuel Perez
Miami-Dade Product Control

enclos corp

2770 Blue Water Road
Eagan, MN 55121-1400
Tel. 651-796-6100 • Fax 651-994-6380

Engineering Locations
Eagan, MN • Montreal, QC, CA • Moncton, NB, CA
St. Louis, MO • Manila, PH

REVISIONS

1	3/7/2016 REV'S PER P.C.E.

WILLIAM D. COOK LICENSE No 43904 STATE OF FLORIDA PROFESSIONAL ENGINEER SEAL

MAR 3 0 2016
Reviewed For Structural Integrity Only

BROMLEY · COOK ENGINEERING INC.
STRUCTURAL ENGINEERING SERVICES
5440 N.W. 33RD AVENUE SUITE 100
FORT LAUDERDALE, FLORIDA 33309
TEL: (954) 772-4624 FAX: (954) 772-4625
CERT. OF AUTH. #00009124
WILLIAM D. COOK P.E.
FLA P.E. # 43904
FLA S.I. # 2008

Date	Scale
9/05/14	

Drawing No.
7030 SS LMI

Drawing Title
7030 SERIES WINDOW WALL
SINGLE SPAN
LARGE MISSILE IMPACT

Sheet No.
11/25

3/28/2013 chris day

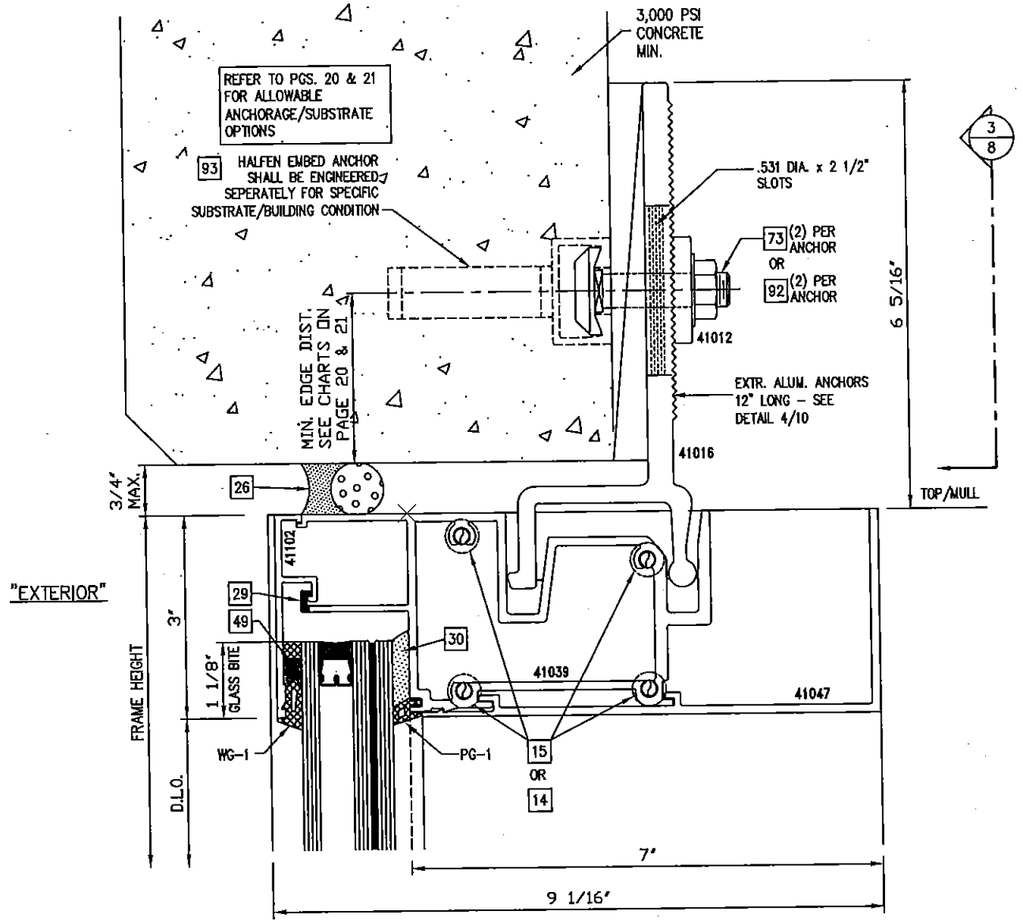

1/8 HEAD DETAIL – 1 3/8" CAPTURED GLASS WITH ALUM. STRAP ANCHORAGE OPTION

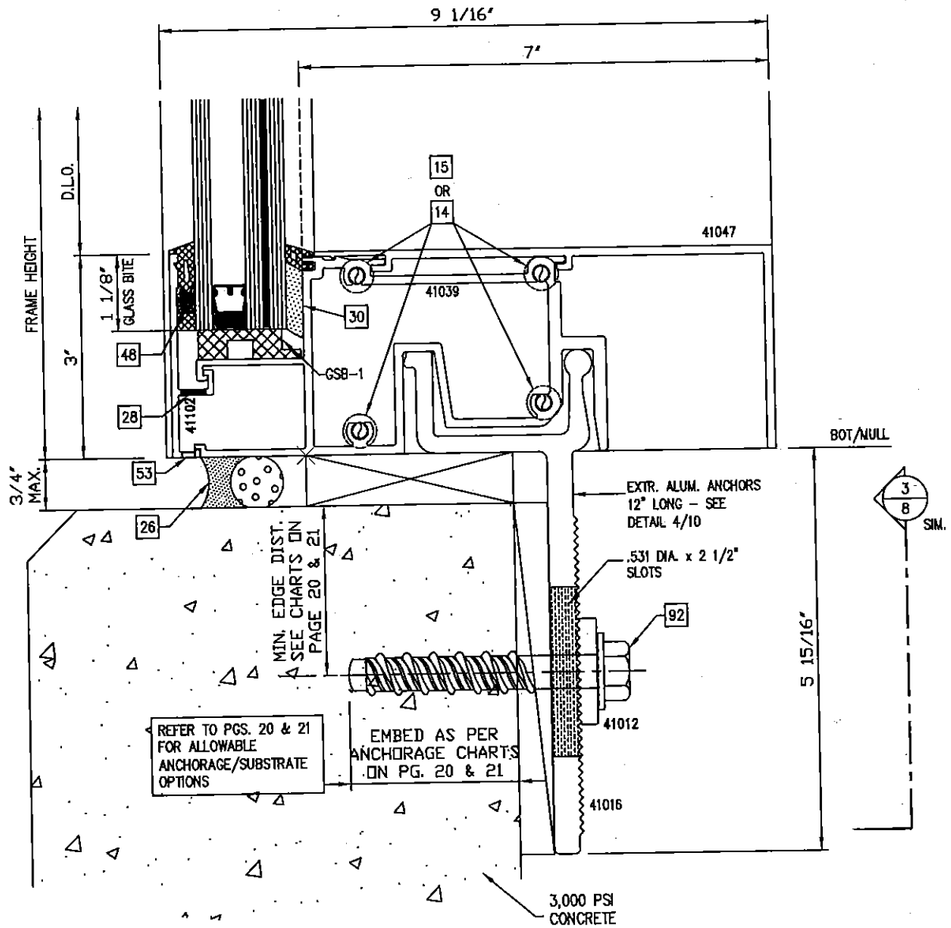

2/8 SILL DETAIL – 1 3/8" CAPTURED GLASS WITH ALUM. STRAP ANCHORAGE OPTION

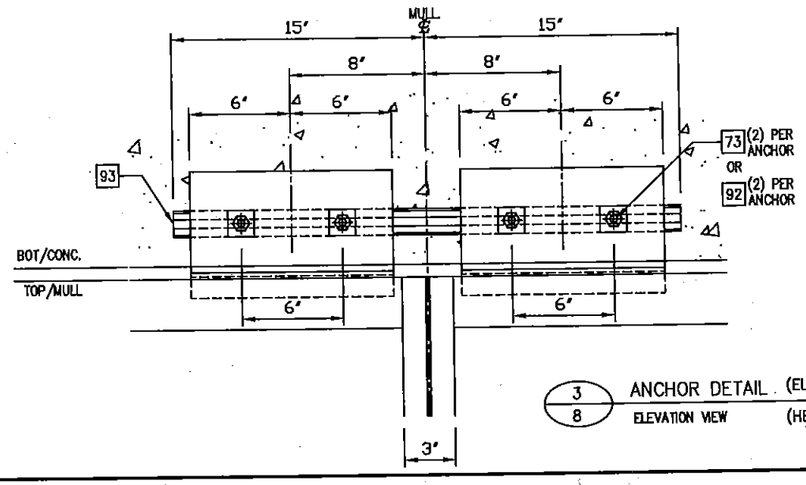

3/8 ANCHOR DETAIL (ELEVATION VIEWED FROM INTERIOR)
ELEVATION VIEW (HEAD SHOWN, SILL OPP.)

FOR MIAMI-DADE CO. B.C.C.O.

PRODUCT REVISED
as complying with the Florida Building Code
Acceptance No 14-0930.22
Expiration Date Sept. 9, 2019
By Manuel Perez
Miami Dade Product Control

enclos corp
2770 Blue Water Road
Eagan, MN 55121-1400
Tel. 651-796-6100 • Fax 651-994-6380
Engineering Locations
Eagan, MN • Montreal, QC, CA • Moncton, NB, CA
St. Louis, MO • Hamilton, ON

REVISIONS

1	3/7/2015 REV'S PER P.C.E.

WILLIAM D. COOK LICENSE No 43904 STATE OF FLORIDA PROFESSIONAL ENGINEER SEAL
MAR 30 2015
Reviewed For Structural Integrity Only

BROMLEY - COOK ENGINEERING GROUP, INC.
STRUCTURAL ENGINEERING SERVICES
5440 N.W. 33RD AVENUE SUITE 100
FORT LAUDERDALE, FLORIDA 33309
TEL (954) 772-4624 FAX (954) 772-4634
CERT. OF AUTH. #00009124
WILLIAM D. COOK P.E.
FLA P.E. # 43904
FLA SI. # 2008

Date	Scale
9/05/14	

Drawing No.
7030 SS LWI

Drawing Title
7030 SERIES WINDOW WALL SINGLE SPAN LARGE MISSILE IMPACT

Sheet No.
12/25

chris dewy
3/28/2015

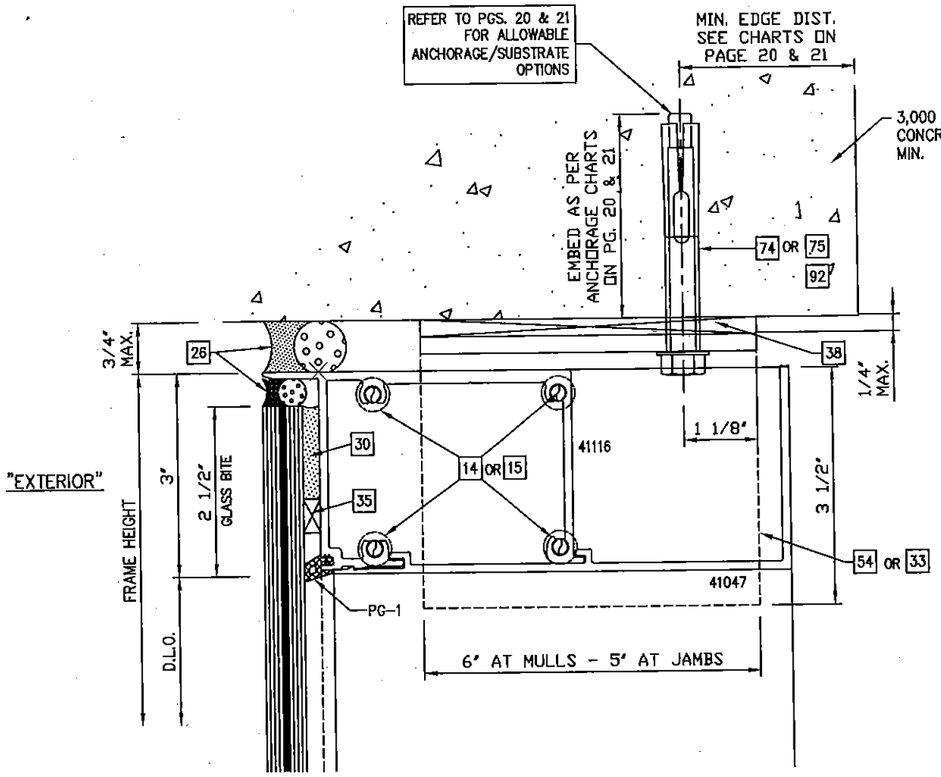

1/13 HEAD DETAIL – 9/16" STRUCTURALLY GLAZED GLASS WITH "L" CLIP ANCHORAGE OPTION

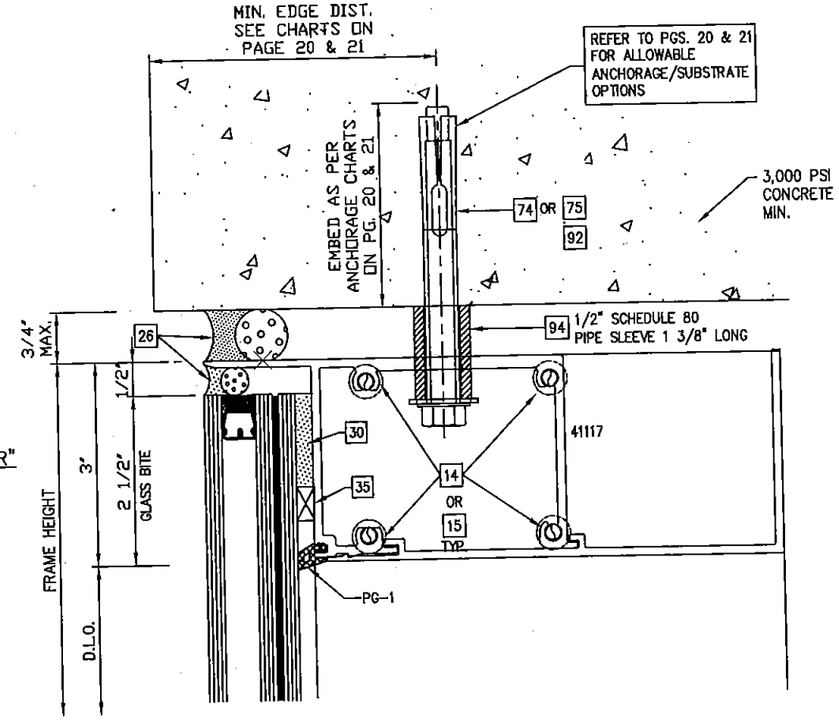

3/13 HEAD DETAIL – 1 3/8" STRUCTURALLY GLAZED GLASS WITH THRU CAN ANCHORAGE OPTION

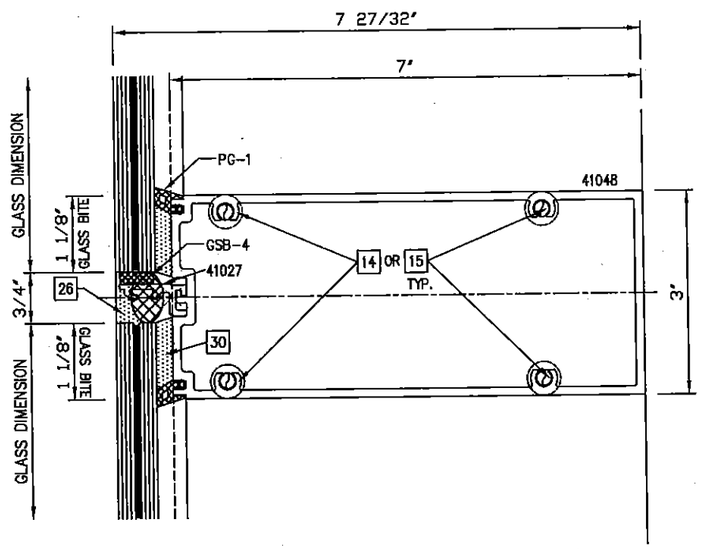

2/13 INTERMEDIATE HORIZONTAL DETAIL – 9/16" STRUCTURALLY GLAZED GLASS

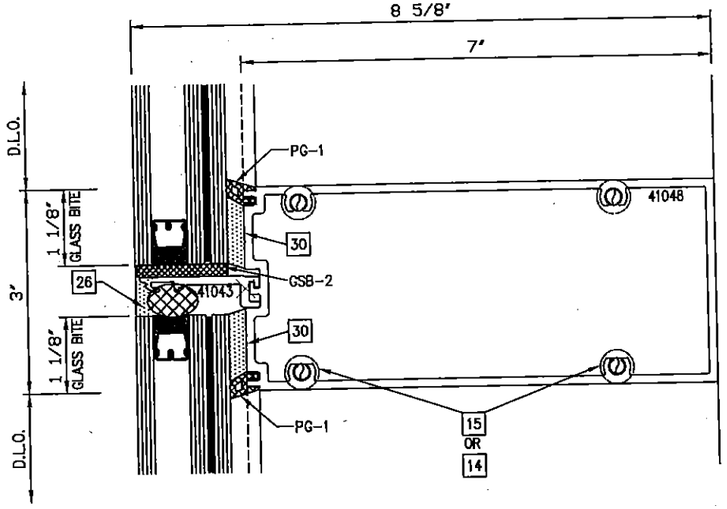

4/13 INTERMEDIATE HORIZONTAL DETAIL – 1 3/8" STRUCTURALLY GLAZED GLASS

FOR MIAMI-DADE CO. B.C.C.O.

PRODUCT REVISED
as complying with the Florida
Building Code
Acceptance No. 14-0930.22
Expiration Date Sept. 9, 2019
By Manuel Perez
Miami-Dade Product Control

enclos corp
2770 Blue Water Road
Eagan, MN 55121-1400
Tel. 651-796-6100 • Fax 651-994-6360
Engineering Locations
Eagan, MN • Montreal, QC, CA • Moncton, NB, CA
St. Louis, MO • Manila, PH

REVISIONS

1	3/7/2015 REV'S PER P.C.E.

WILLIAM D. COOK LICENSE NO. 43904 STATE OF FLORIDA PROFESSIONAL ENGINEER SEAL

MAR 3 0 2015
Reviewed for Structural Integrity Only

BROMLEY - COOK ENGINEERING, INC.
STRUCTURAL ENGINEERING SERVICES
5440 N.W. 33RD AVENUE SUITE 106
FORT LAUDERDALE, FLORIDA 33309
TEL: (954) 772-4624 FAX: (954) 772-4627
CERT. OF AUTH. #00009124
WILLIAM D. COOK P.E.
FLA P.E. # 43904
FLA S.I. # 2008

Date	Scale
9/05/14	

Drawing No.
7030 SS LMI

Drawing Title
7030 SERIES WINDOW WALL
SINGLE SPAN
LARGE MISSILE IMPACT

Sheet No.
13/25

chris devy
3/26/2015

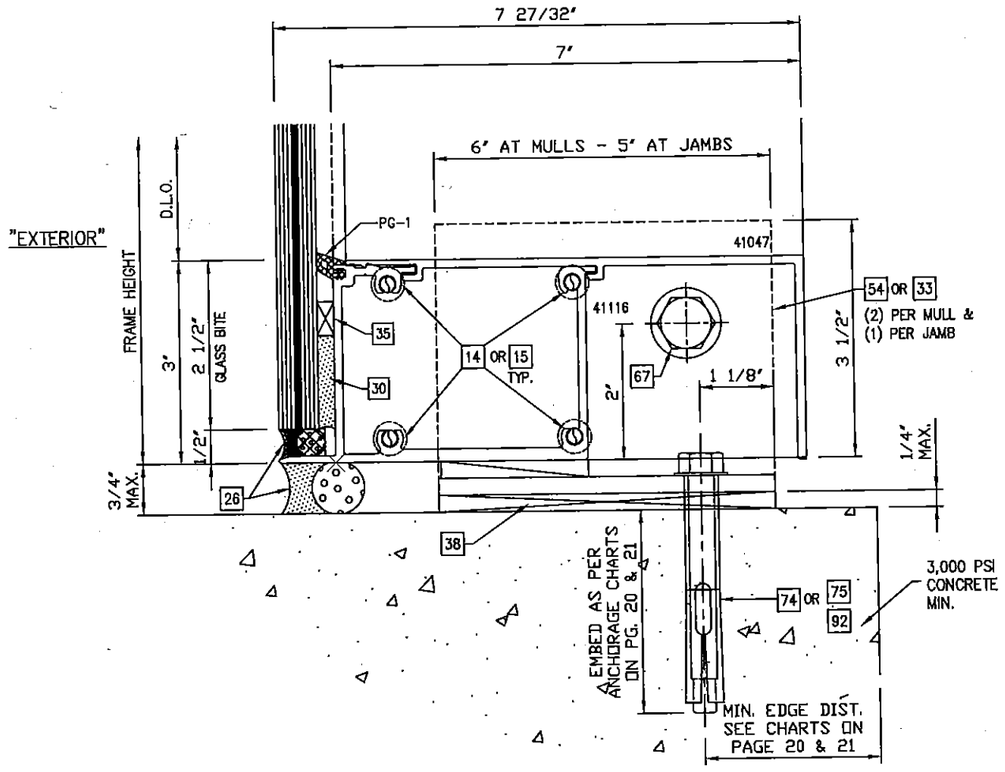

1/14 SILL DETAIL – 9/16" STRUCTURALLY GLAZED GLASS WITH "L" CLIP ANCHORAGE OPTION

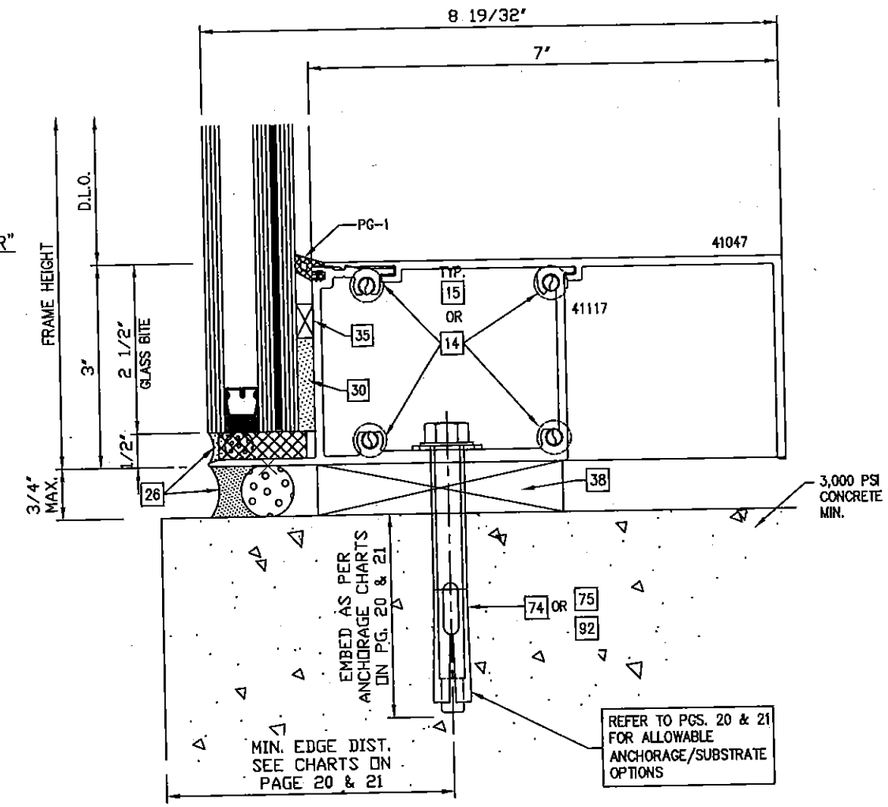

2/14 SILL DETAIL – 1 3/8" STRUCTURALLY GLAZED GLASS WITH "L" CLIP ANCHORAGE OPTION

FOR MIAMI-DADE CO. B.C.C.O.

PRODUCT REVISED
as complying with the Florida
Building Code
Acceptance No 14-0930.22
Expiration Date Sept. 9, 2019
By Manuel Perez
Miami-Dade Product Control

enclos corp

2770 Blue Water Road
Eagan, MN 55121-1400
Tel. 651-796-6100 • Fax 651-994-6360

Engineering Locations
Eagan, MN • Montreal, QC, CA • Moncton, NB, CA
St. Louis, MO • Manila, PH

REVISIONS

1	3/7/2016 REV'S PER P.C.E.

WILLIAM D. COOK LICENSE No 43904 STATE OF FLORIDA PROFESSIONAL ENGINEER

SEAL

MAR 30 2015
Reviewed For Structural Integrity Only

BROMLEY · COOK ENGINEERING INC.
STRUCTURAL ENGINEERING SERVICES
5440 N.W. 33RD AVENUE SUITE 100
FORT LAUDERDALE, FLORIDA 33309
TEL: (954) 772-4624 FAX: (954) 772-4652
CERT. OF AUTH. #00009124
WILLIAM D. COOK P.E.
FLA P.E. # 43904
FLA S.I. # 2008

Date	Scale
9/05/14	

Drawing No.
7030 SS LMI

Drawing Title
7030 SERIES WINDOW WALL
SINGLE SPAN
LARGE MISSILE IMPACT

Sheet No.
14/25

3/28/2015 chris devy

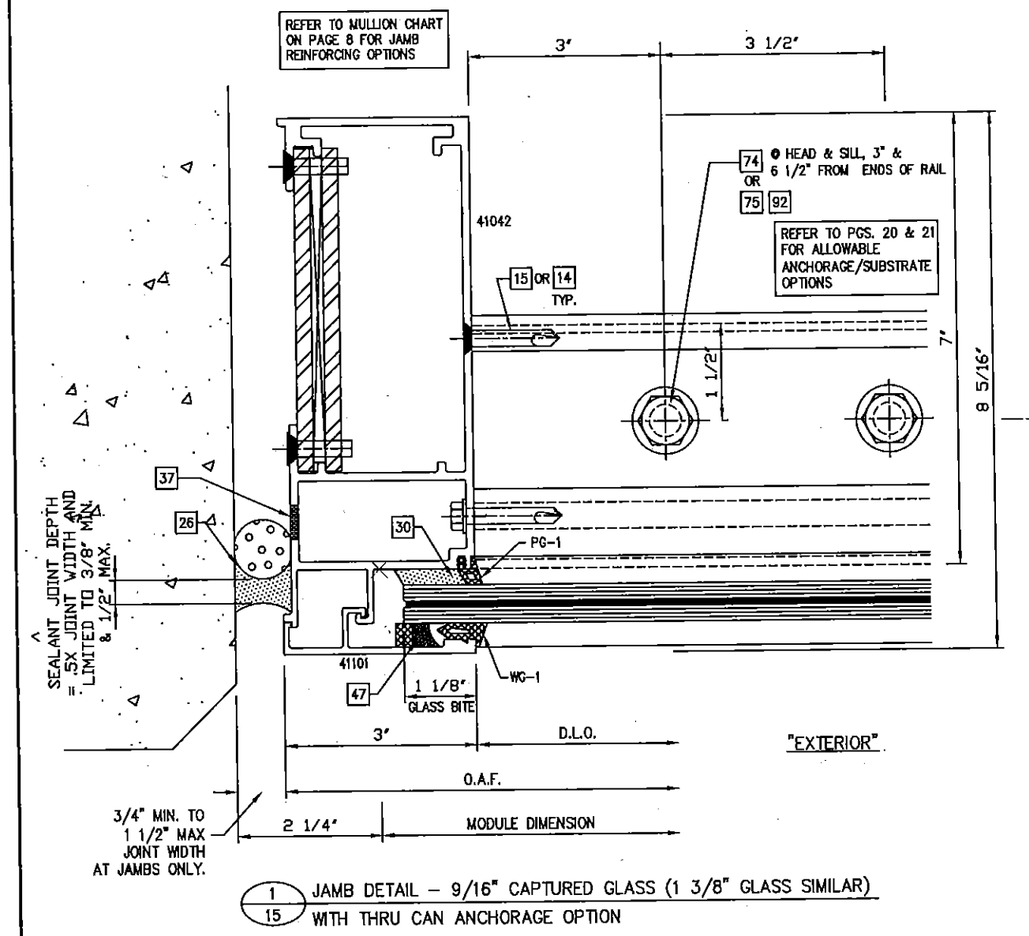

1/15 JAMB DETAIL – 9/16" CAPTURED GLASS (1 3/8" GLASS SIMILAR) WITH THRU CAN ANCHORAGE OPTION

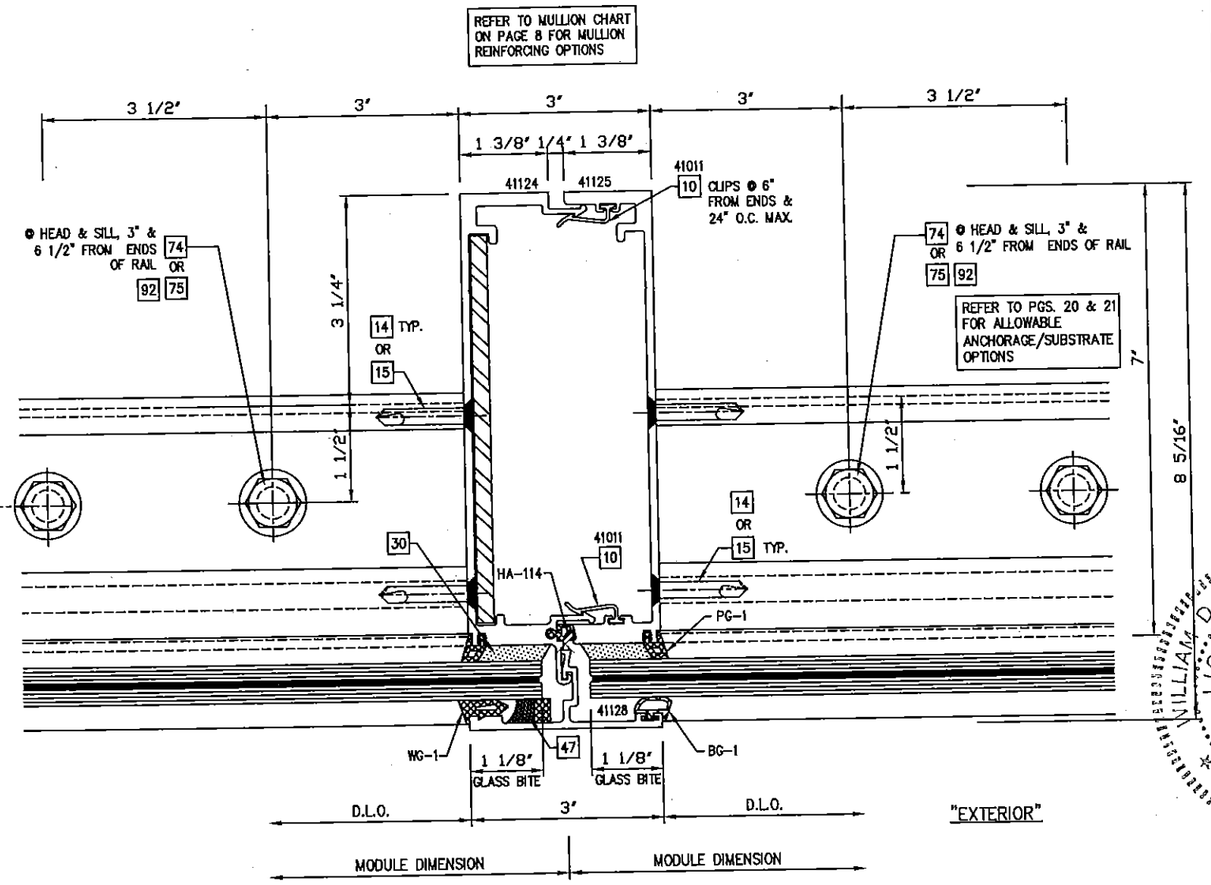

2/15 VERTICAL MULLION DETAIL – 9/16" CAPTURED GLASS (1 3/8" GLASS SIMILAR) WITH THRU CAN ANCHORAGE OPTION

PERIMETER SEALANT OPTIONS:
DOW-CORNING 790 SILICONE
DOW-CORNING 791 SILICONE
DOW-CORNING 795 SILICONE

ALTERNATE PERIMETER SEALANT TYPES AND JOINT SIZES SHALL BE DESIGNED AND APPROVED BY DESIGN PROFESSIONAL OF RECORD AND OR THE SEALANT MANUFACTURER

FOR MIAMI-DADE CO. B.C.C.O.

PRODUCT REVISED
as complying with the Florida Building Code
Acceptance No 14-0930.22
Expiration Date Sept 9, 2019
By Manuel Perez
Miami Dade Product Control

enclos corp
2770 Blue Water Road
Eagan, MN 55121-1400
Tel. 651-796-6100 • Fax 651-994-6360
Engineering Locations
Eagan, MN • Montreal, QC, CA • Moncton, NB, CA
St. Louis, MO • Manila, PH

REVISIONS
1 3/7/2015 REV'S PER P.C.E.

WILLIAM D. COOK LICENSE No 43904 STATE OF FLORIDA PROFESSIONAL ENGINEER SEAL
MAR 30 2015
Reviewed For Structural Integrity Only

BROMLEY - COOK ENGINEERING, INC.
STRUCTURAL ENGINEERING SERVICES
5440 N.W. 33RD AVENUE SUITE 200
FORT LAUDERDALE, FLORIDA 33309
TEL: (954) 772-4624 FAX: (954) 772-4634
CERT. OF AUTH. #00009124
WILLIAM D. COOK P.E.
FLA P.E. # 43904
FLA SI. # 2008

Date	Scale
9/05/14	

Drawing No.
7030 SS LWI

Drawing Title
7030 SERIES WINDOW WALL
SINGLE SPAN
LARGE MISSILE IMPACT

Sheet No.
15/25

chris dory
3/26/2015

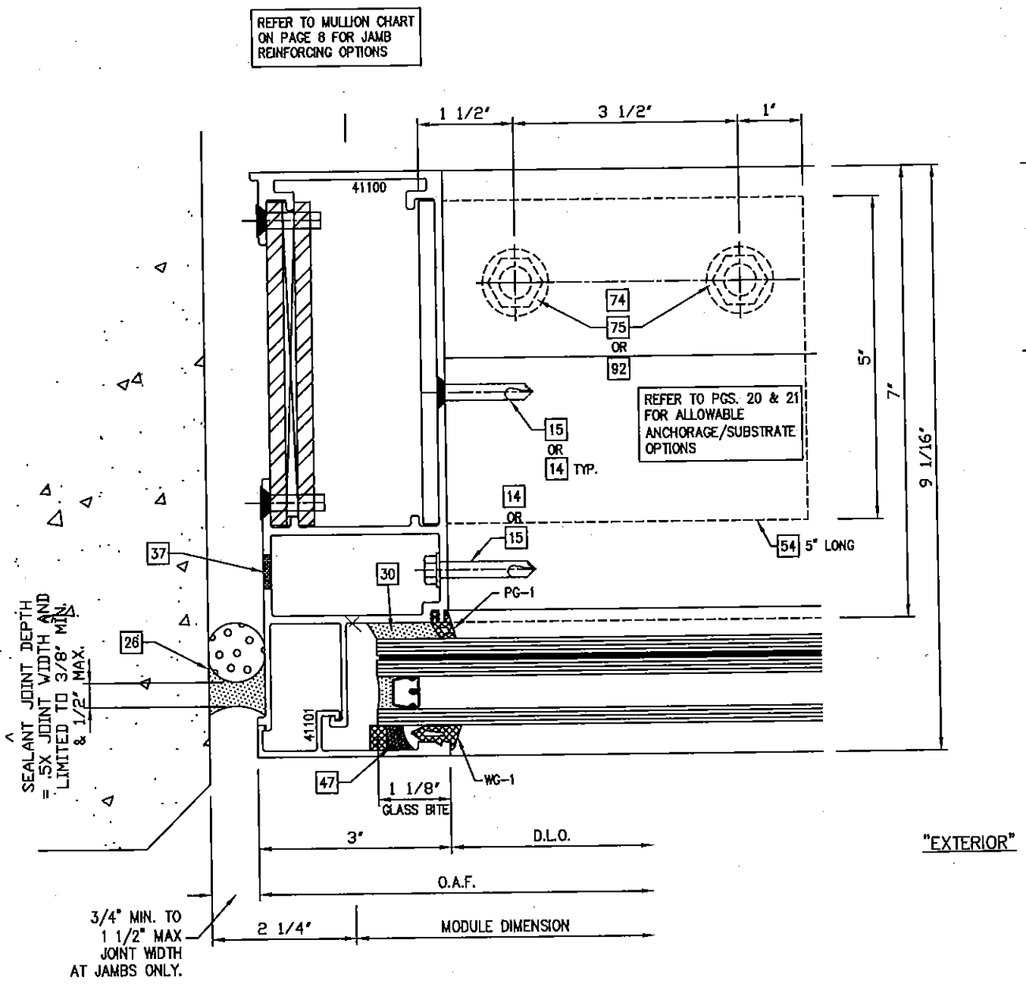

1/16 JAMB DETAIL – 1 3/8" CAPTURED GLASS (9/16" GLASS SIMILAR)
WITH "L" CLIP ANCHORAGE OPTION

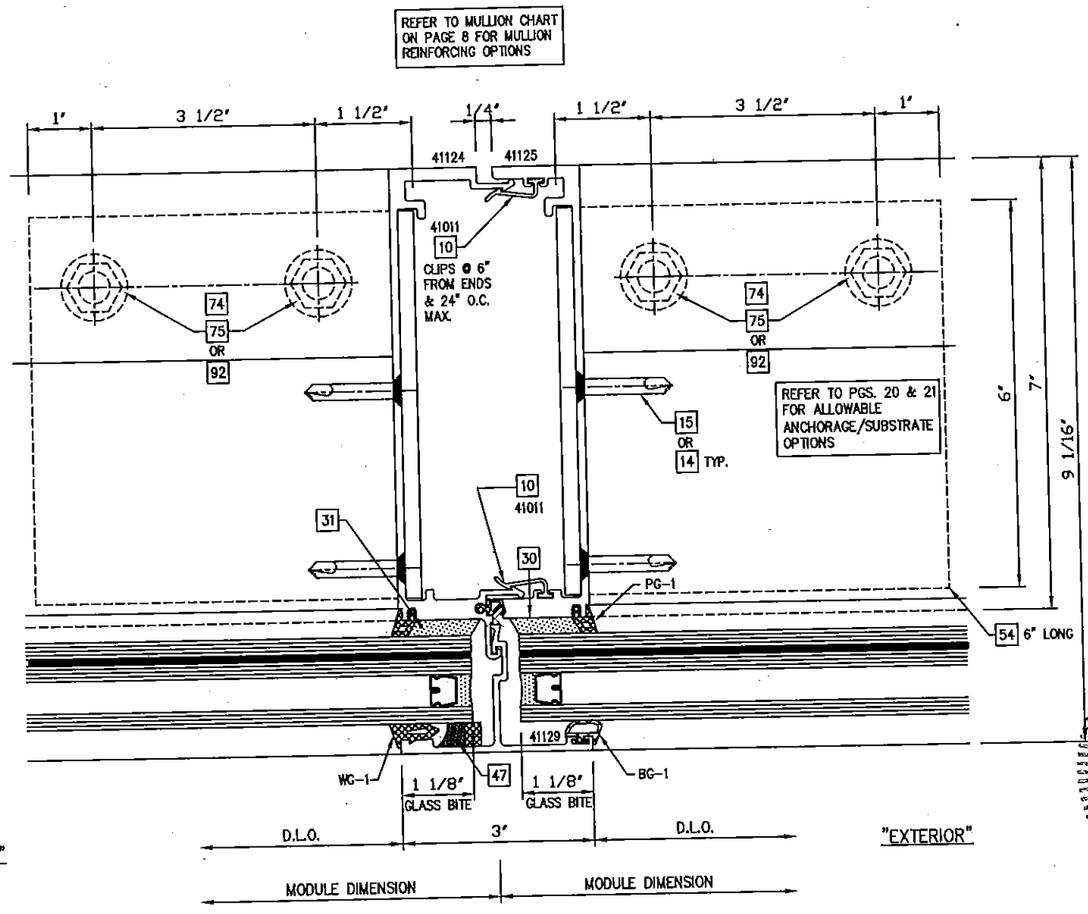

2/16 VERTICAL MULLION DETAIL – 1 3/8" CAPTURED GLASS (9/16" GLASS SIMILAR)
WITH "L" CLIP ANCHORAGE OPTION

PERIMETER SEALANT OPTIONS:
DOW-CORNING 790 SILICONE
DOW-CORNING 791 SILICONE
DOW-CORNING 795 SILICONE

ALTERNATE PERIMETER SEALANT TYPES AND JOINT SIZES SHALL BE DESIGNED AND APPROVED BY DESIGN PROFESSIONAL OF RECORD AND OR THE SEALANT MANUFACTURER

FOR MIAMI-DADE CO. B.C.C.O.

PRODUCT REVISED
as complying with the Florida Building Code
Acceptance No 14-0930.22
Expiration Date Sept. 9, 2019
By Manuel Perez
Miami-Dade Product Control

enclos corp
2770 Blue Water Road
Eagan, MN 55121-1400
Tel. 651-796-6100 • Fax 651-994-6960
Engineering Locations
Eagan, MN • Montreal, QC, CA • Moncton, NB, CA
St. Louis, MO • Manila, PH

REVISIONS
1 3/7/2015 REV'S PER P.C.E.

WILLIAM D. COOK LICENSE No 43904 STATE OF FLORIDA PROFESSIONAL ENGINEER SEAL
MAR 30 2015
Accepted for Structural Integrity Only

BROMLEY - COOK ENGINEERING, INC.
STRUCTURAL ENGINEERING SERVICES
5440 N.W. 33RD AVENUE SUITE 330
FORT LAUDERDALE, FLORIDA 33309
TEL: (954) 772-4624 FAX: (954) 772-4634
CERT. OF AUTH. #00009124
WILLIAM D. COOK P.E.
FLA.P.E. # 43904
FLA S.I. # 2008

Date	Scale
9/05/14	

Drawing No.
7030 SS LMI

Drawing Title
7030 SERIES WINDOW WALL
SINGLE SPAN
LARGE MISSILE IMPACT

Sheet No.
16/25

chris devy
3/26/2015

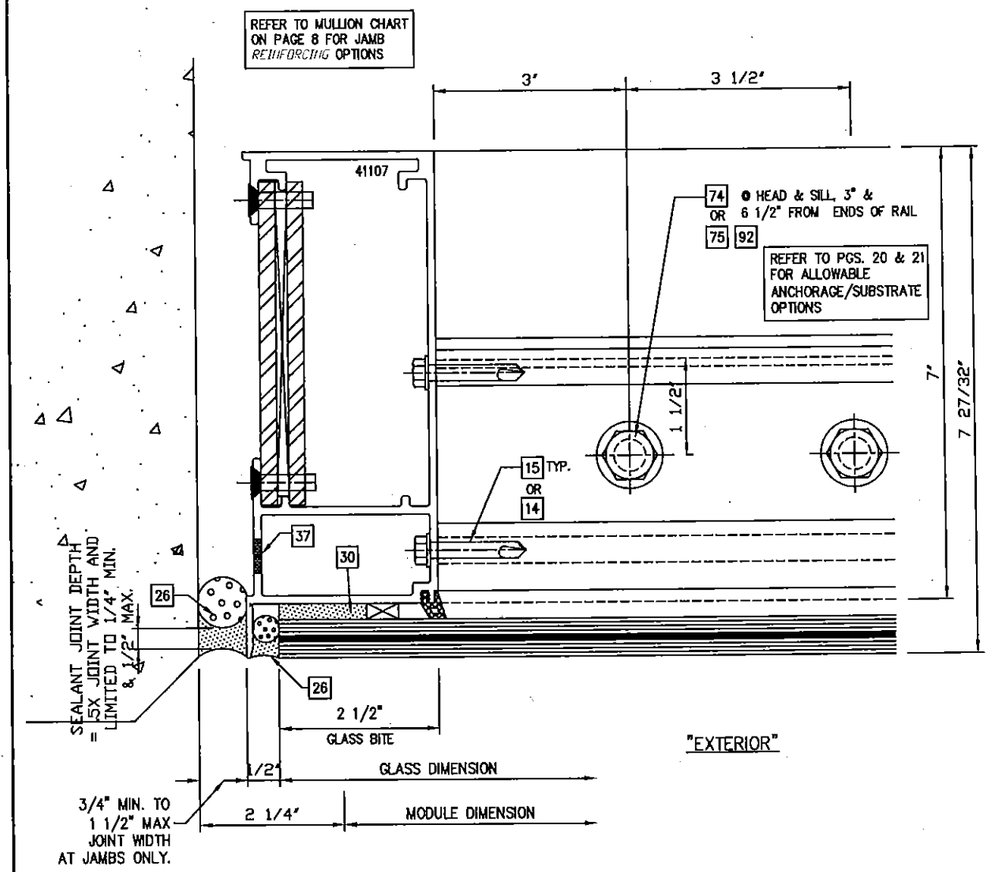

1/17 JAMB DETAIL – 9/16" STRUCTURALLY GLAZED GLASS (1 3/8" GLASS SIMILAR) WITH THRU CAN ANCHORAGE OPTION

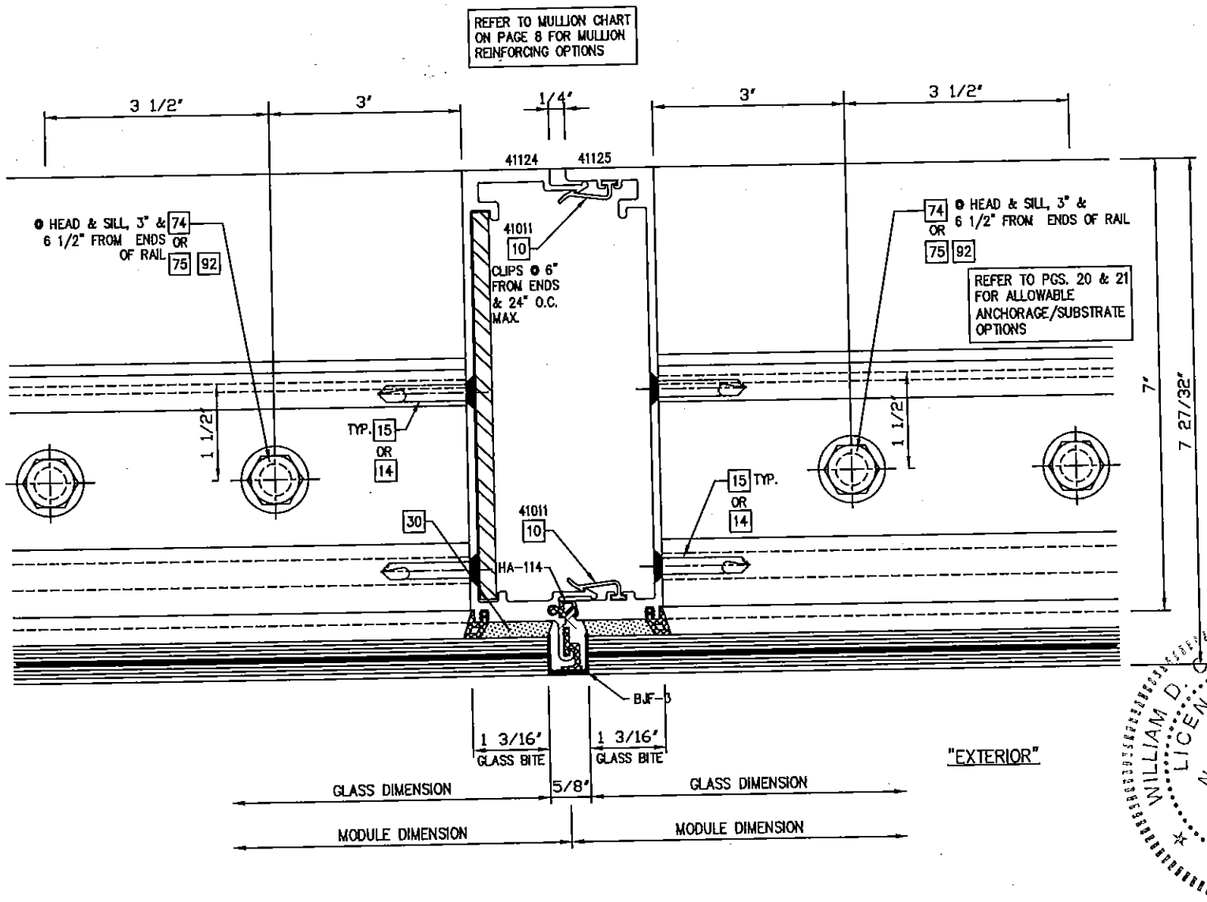

2/17 VERTICAL MULLION DETAIL – 9/16" STRUCTURALLY GLAZED GLASS (1 3/8" GLASS SIMILAR) WITH THRU CAN ANCHORAGE OPTION

PERIMETER SEALANT OPTIONS:
DOW-CORNING 790 SILICONE
DOW-CORNING 791 SILICONE
DOW-CORNING 795 SILICONE

ALTERNATE PERIMETER SEALANT TYPES AND JOINT SIZES SHALL BE DESIGNED AND APPROVED BY DESIGN PROFESSIONAL OF RECORD AND OR THE SEALANT MANUFACTURER

FOR MIAMI-DADE CO. B.C.C.O.

PRODUCT REVISED
as complying with the Florida Building Code
Acceptance No 14-0930.22
Expiration Date Sept 9, 2019
By Manuel Perez
Miami Dade Product Control

enclos corp
2770 Blue Water Road
Eagan, MN 55121-1400
Tel. 651-796-6100 • Fax 651-994-6360
Engineering Locations
Eagan, MN • Montreal, QC, CA • Moncton, NB, CA
St. Louis, MO • Manila, PH

REVISIONS
1 3/7/2016 REV'S PER P.C.E.

WILLIAM D. COOK LICENSE No 43904 STATE OF FLORIDA PROFESSIONAL ENGINEER SEAL
MAR 3 4 2015
Revised For Structural Integrity Only

BROMLEY · COOK ENGINEERING INC.
STRUCTURAL ENGINEERING SERVICES
5440 N.W. 33RD AVENUE SUITE 100
FORT LAUDERDALE, FLORIDA 33309
TEL (954) 772-4624 FAX (954) 772-4629
CERT. OF AUTH. #00009124
WILLIAM D. COOK P.E.
FLA P.E. # 43904
FLA S.I. # 2008

Date	Scale
9/05/14	

Drawing No.
7030 SS LMI

Drawing Title
7030 SERIES WINDOW WALL
SINGLE SPAN
LARGE MISSILE IMPACT

Sheet No.
17/25

chris dory
3/25/2015

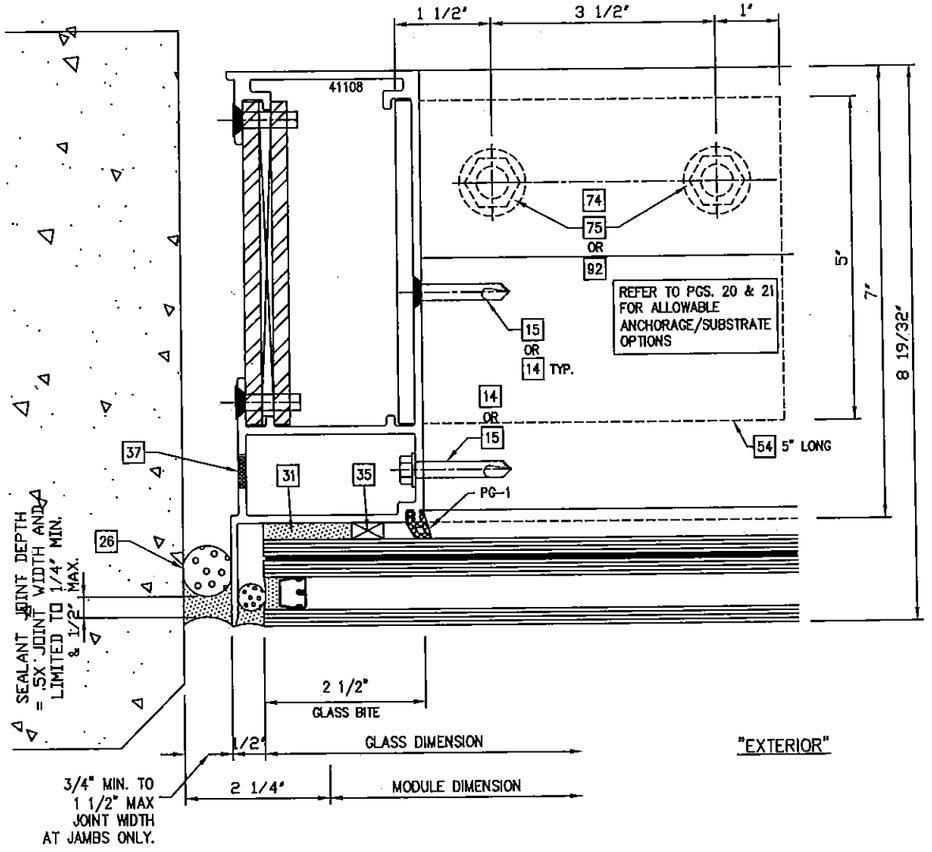

1/18 JAMB DETAIL – 1 3/8" STRUCTURALLY GLAZED GLASS (9/16" GLASS SIMILAR) WITH "L" CLIP ANCHORAGE OPTION

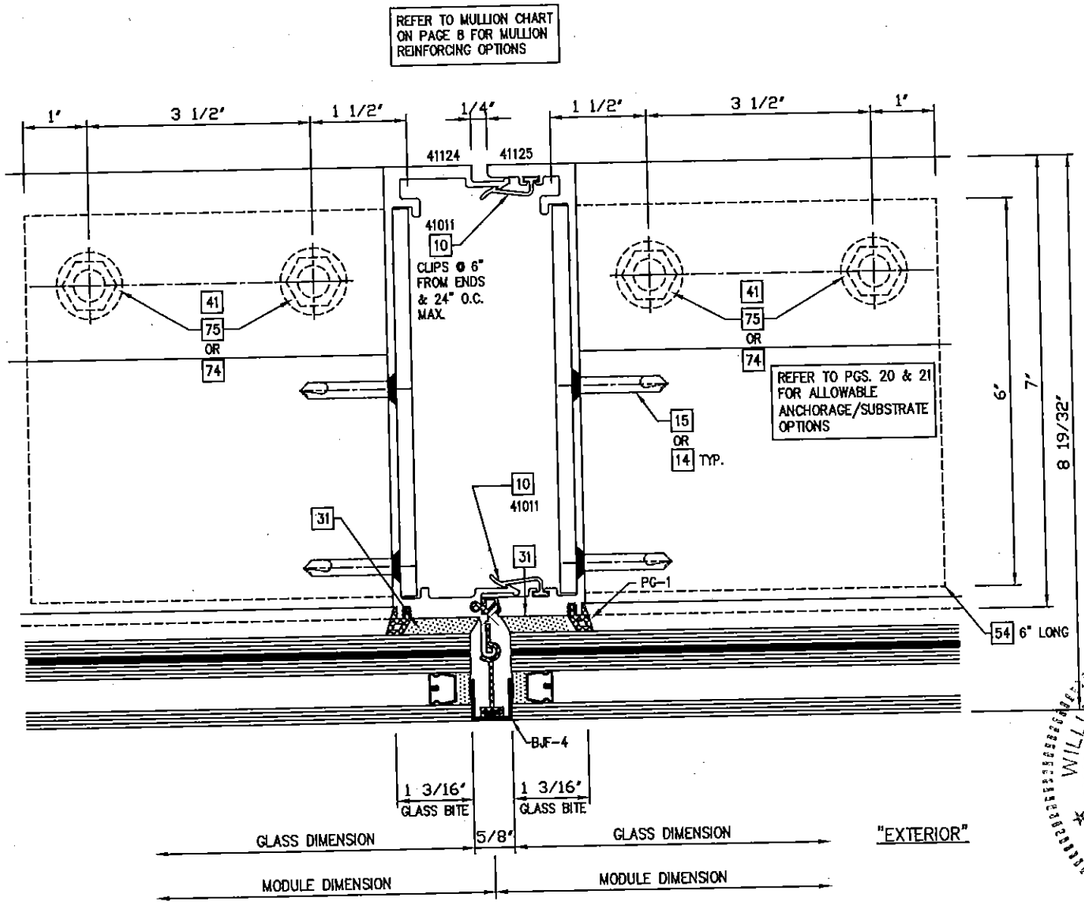

2/18 VERTICAL MULLION DETAIL – 1 3/8" STRUCTURALLY GLAZED GLASS (9/16" GLASS SIMILAR) WITH "L" CLIP ANCHORAGE OPTION

FOR MIAMI–DADE CO. B.C.C.O.

PRODUCT REVISED
as complying with the **Florida**
Building Code
Acceptance No 14-0930.22
Expiration Date Sept 9, 2019
By Manuel Perez
Miami-Dade Product Control

enclos corp

2770 Blue Water Road
Eagan, MN 55121-1400
Tel. 651-796-6100 • Fax 651-994-6360

Engineering Locations
Eagan, MN • Montreal, QC, CA • Moncton, NB, CA
St. Louis, MO • Manilla, PH

REVISIONS

1	3/7/2016 REV'S PER P.C.E.

WILLIAM D. COOK LICENSE No 43904 STATE OF FLORIDA PROFESSIONAL ENGINEER

MAR 30 2015

Reviewed For Structural Integrity Only

BROMLEY - COOK ENGINEERING, INC.
STRUCTURAL ENGINEERING SERVICES
5440 N.W. 33RD AVENUE SUITE 101
FORT LAUDERDALE, FLORIDA 33309
TEL: (954) 772-4624 FAX: (954) 772-4625
CERT. OF AUTH. #00009124
WILLIAM D. COOK P.E.
FLA P.E. # 43904
FLA S.I. # 2008

Date	Scale
9/05/14	

Drawing No.
7030 SS LMI

Drawing Title
7030 SERIES WINDOW WALL
SINGLE SPAN
LARGE MISSILE IMPACT

Sheet No.
18/25

chris davy
3/26/2015

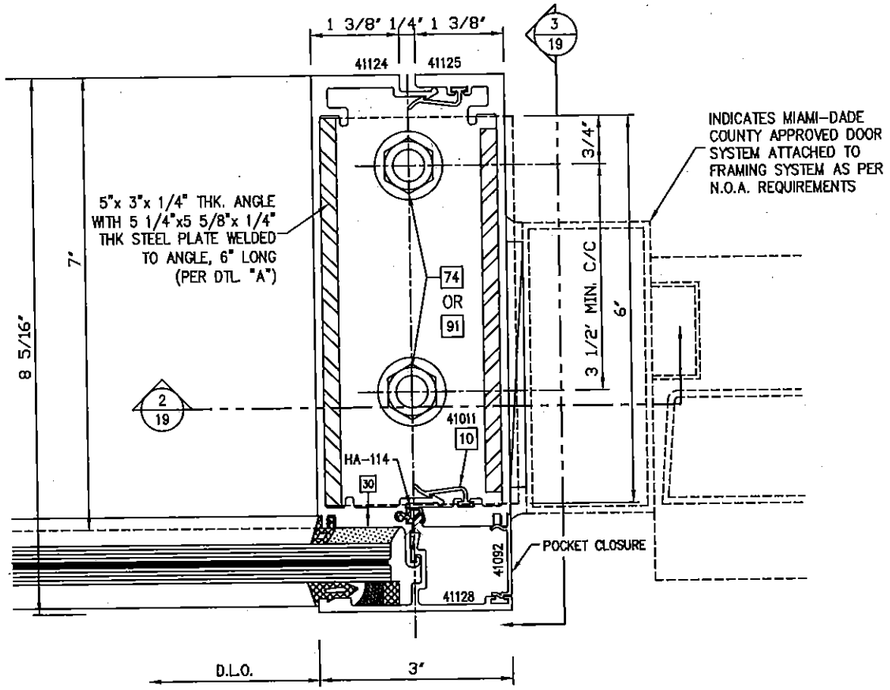

1/19 VERTICAL MULLION DETAIL – 9/16" CAPTURED GLASS
1 3/8" GLASS SIMILAR

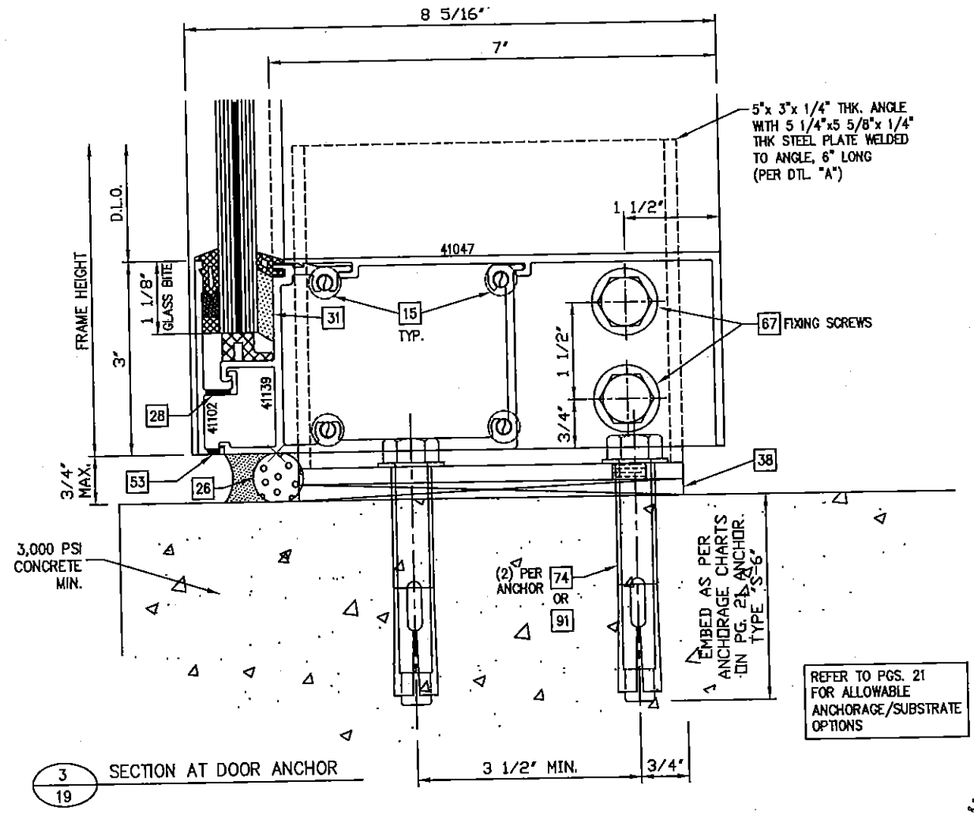

3/19 SECTION AT DOOR ANCHOR

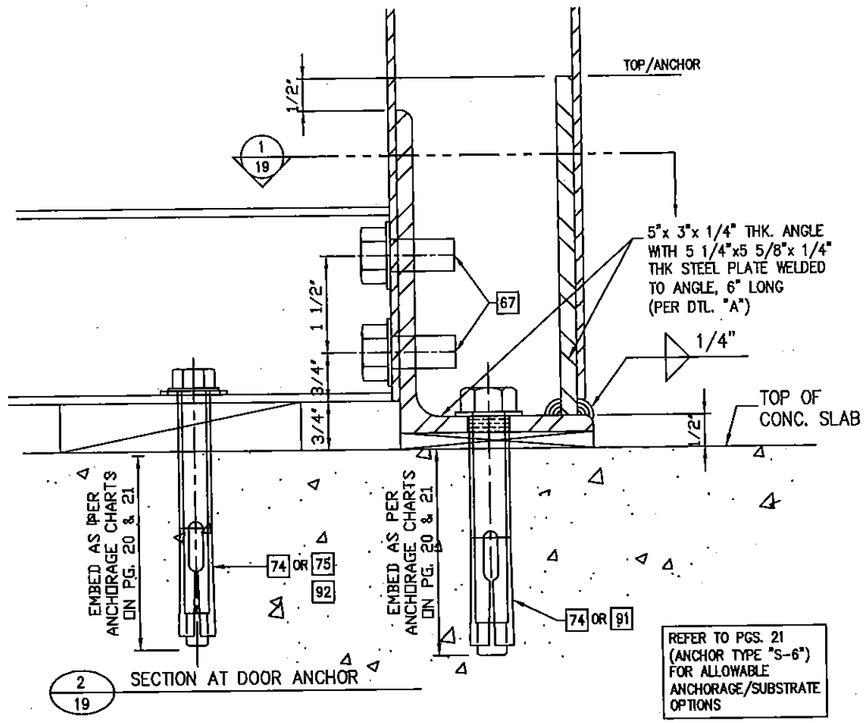

2/19 SECTION AT DOOR ANCHOR

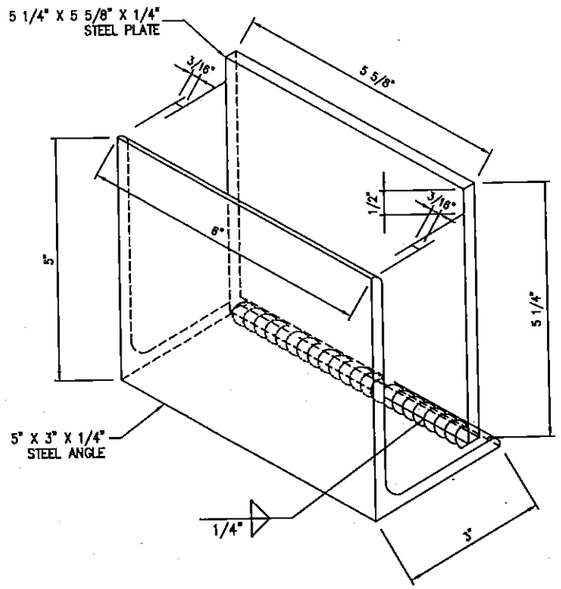

A/19 ANCHOR SLEEVE FABRICATION DETAIL "A"
(ISOMETRIC VIEW)

FOR MIAMI-DADE CO. B.C.C.O.

PRODUCT REVISED
as complying with the Florida
Building Code
Acceptance No 14-0930.22
Expiration Date Sept. 9, 2019
By
Miami-Dade Product Control

enclos corp
2770 Blue Water Road
Eagan, MN 55121-1400
Tel. 651-796-6100 • Fax 651-994-6360
Engineering Locations
Eagan, MN • Montreal, QC, CA • Moncton, NB, CA
St. Louis, MO • Manila, PH

REVISIONS
1 3/7/2015 REV'S PER P.C.E.

WILLIAM D. COOK LICENSE No 43904 STATE OF FLORIDA PROFESSIONAL ENGINEER
SEAL:
MAR 13 2015
Reviewed For Structural Integrity Only

BROMLEY - COOK ENGINEERING, INC.
STRUCTURAL ENGINEERING SERVICES
5440 N.W. 33RD AVENUE SUITE 100
FORT LAUDERDALE, FLORIDA 33309
TEL: (954) 772-4624 FAX: (954) 772-4634
CERT. OF AUTH. #00009124
WILLIAM D. COOK P.E.
FLA P.E. # 43904
FLA S.I. # 2008

Date	Scale
9/05/14	

Drawing No.
7030 SS LMI

Drawing Title
7030 SERIES WINDOW WALL
SINGLE SPAN
LARGE MISSILE IMPACT

Sheet No.
19/25

chris devy
3/26/2015

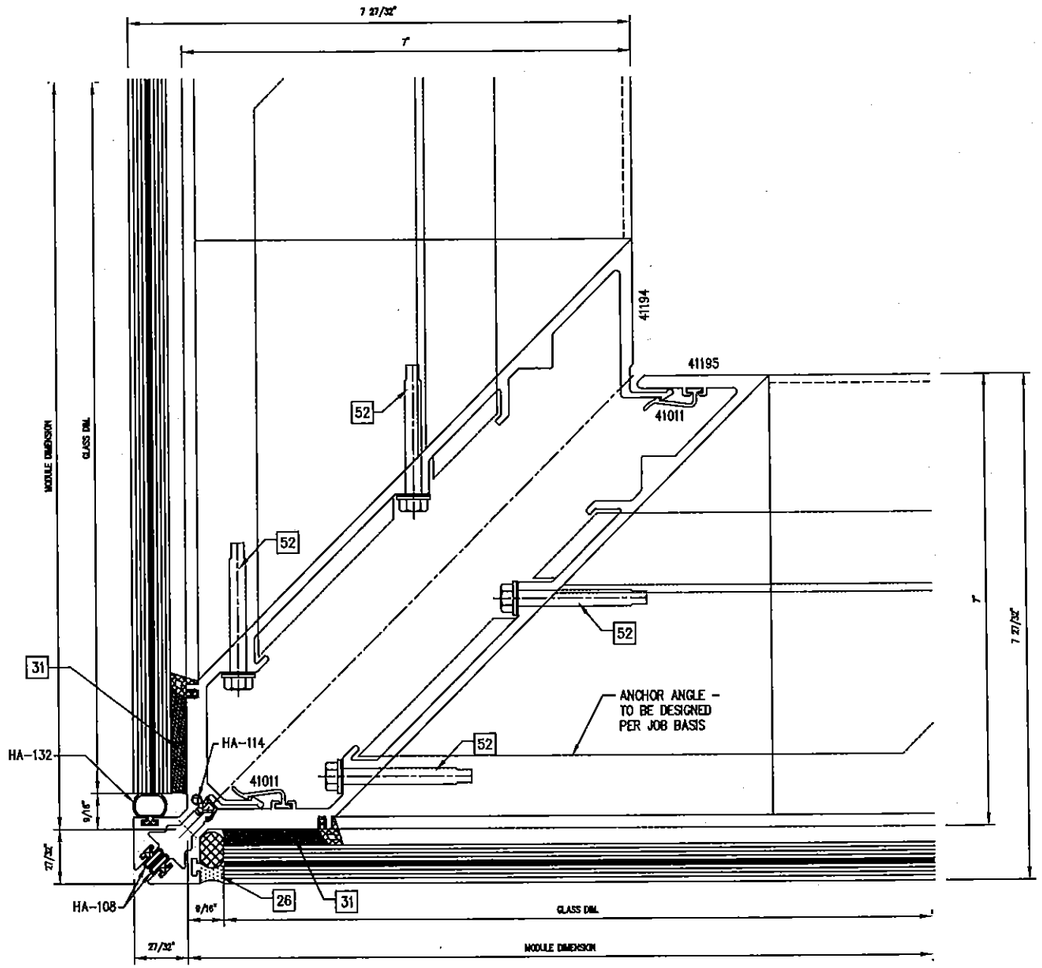

1 / 19A CORNER DETAIL – 9/16" STRUCTURALLY GLAZED GLASS

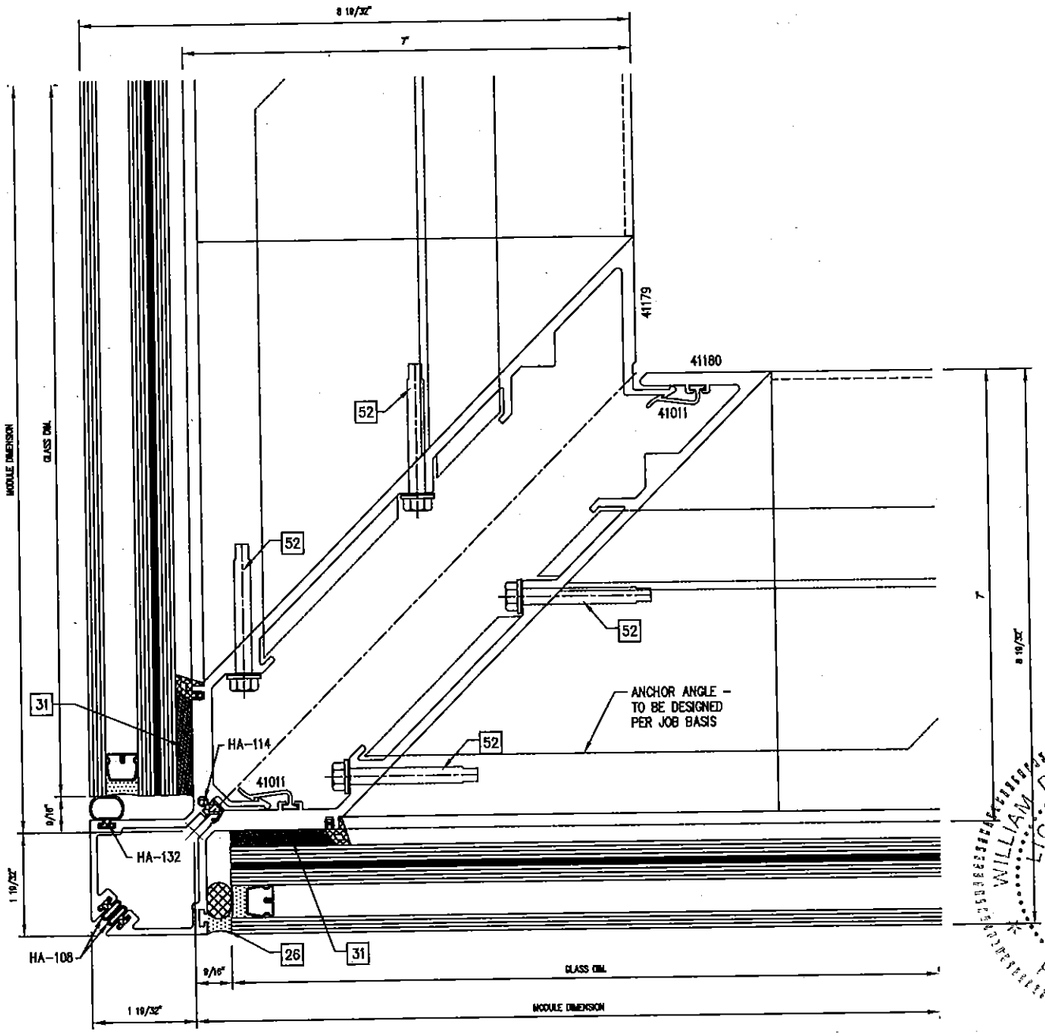

2 / 19A CORNER DETAIL – 1 3/8" STRUCTURALLY GLAZED GLASS

FOR MIAMI-DADE CO. B.C.C.O.

PRODUCT REVISED
as complying with the Florida
Building Code
Acceptance No 14-0930.22
Expiration Date Sept. 9, 2019
By Manuel Perez
Miami Dade Product Control

enclos corp

2770 Blue Water Road
Eagan, MN 55121-1400
Tel. 651-796-6100 • Fax 651-994-6300

Engineering Locations
Eagan, MN • Montreal, QC, CA • Moncton, NB, CA
St. Louis, MO • Manila, PH

REVISIONS

1	3/7/2015 REV'S PER P.C.E.

WILLIAM D. COOK LICENSE No 43904 STATE OF FLORIDA PROFESSIONAL ENGINEER

SEAL:
MAR 3 0 2015
Reviewed For Structural Integrity Only

BROMLEY - COOK ENGINEERING, INC.
STRUCTURAL ENGINEERING SERVICES
5440 N.W. 33RD AVENUE SUITE 100
FORT LAUDERDALE, FLORIDA 33309
TEL: (954) 772-4624 FAX: (954) 772-4637
CERT. OF AUTH. #00009124
WILLIAM D. COOK P.E.
FLA P.E. # 43904
FLA St. # 2008

Date	Scale
9/05/14	

Drawing No.
7030 SS LMI

Drawing Title
7030 SERIES WINDOW WALL
SINGLE SPAN
LARGE MISSILE IMPACT

Sheet No.
19A/25

chris davy
3/26/2015

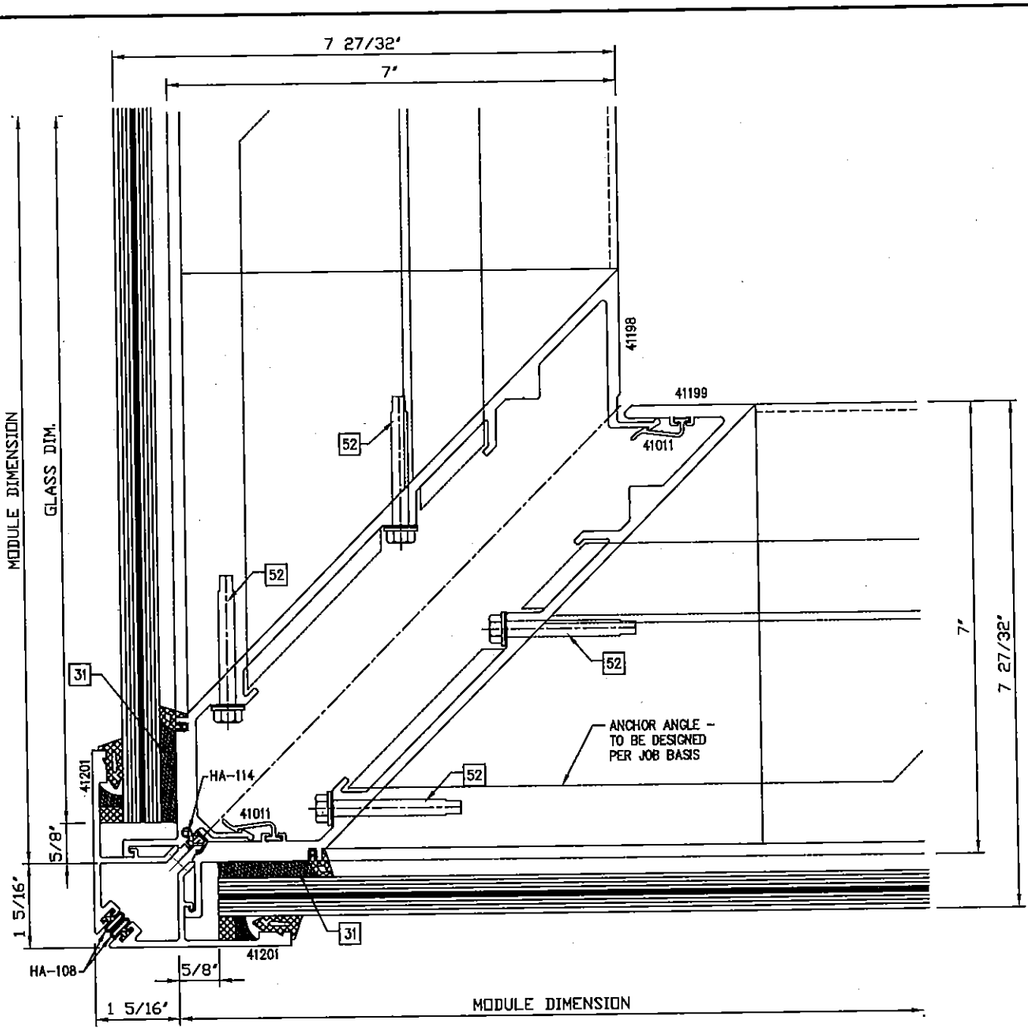

1 / 19B CORNER DETAIL – 9/16" CAPTURED GLASS

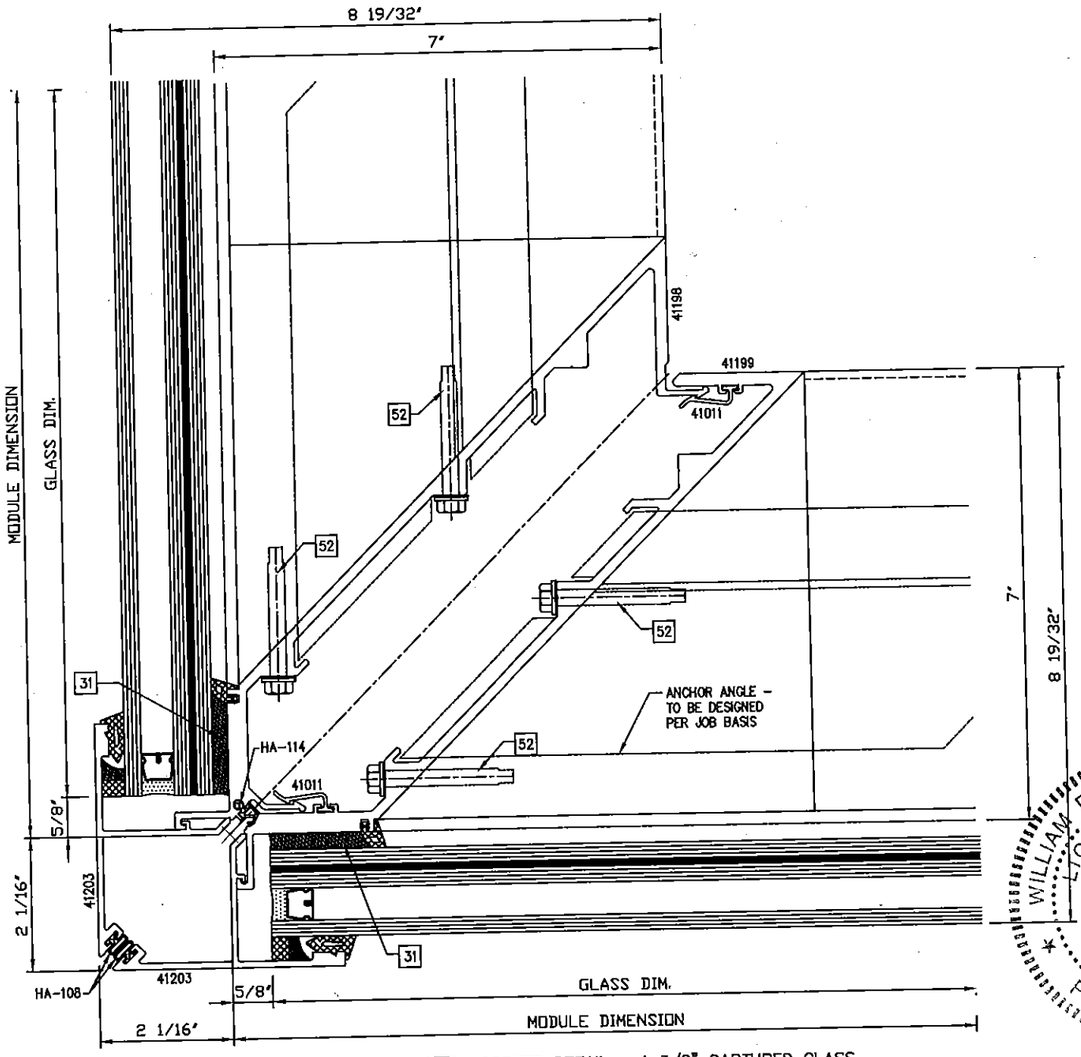

2 / 19B CORNER DETAIL – 1 3/8" CAPTURED GLASS

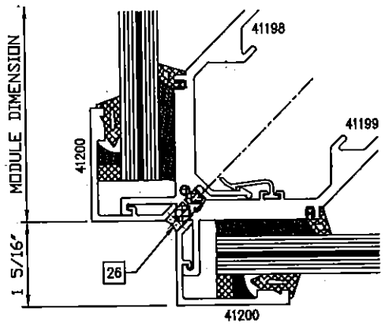

3 / 19B CORNER DETAIL – 9/16" CAPTURED GLASS

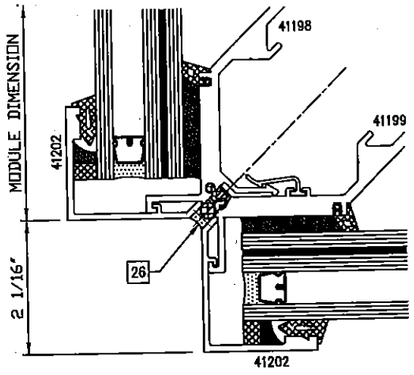

4 / 19B CORNER DETAIL – 1 3/8" CAPTURED GLASS

FOR MIAMI-DADE CO. B.C.C.O.

PRODUCT REVISED
as complying with the Florida
Building Code
Acceptance No 14-0930.22
Expiration Date Sept 9, 2019
By Manuel Perez
Miami Dade Product Control

enclos corp

2770 Blue Water Road
Eagan, MN 55121-1400
Tel 651-796-6100 • Fax 651-994-6360

Engineering Locations
Eagan, MN • Montreal, QC, CA • Moncton, NB, CA
St. Louis, MO • Manila, PH

REVISIONS

1	3/7/2015 REV'S PER P.C.E.

WILLIAM D. COOK LICENSE No 43904 STATE OF FLORIDA PROFESSIONAL ENGINEER
SEAL:
MAR 30 2015
Reviewed For Structural Integrity Only

BROMLEY · COOK ENGINEERING, INC.
STRUCTURAL ENGINEERING SERVICES
5440 N.W. 33RD AVENUE SUITE 100
FORT LAUDERDALE, FLORIDA 33309
TEL: (954) 772-4624 FAX: (954) 772-4624
CERT. OF AUTH. #00009124
WILLIAM D. COOK P.E.
FLA P.E. # 43904
FLA S.I. # 2008

Date	Scale
9/05/14	

Drawing No.
7030 SS LMI

Drawing Title
7030 SERIES WINDOW WALL
SINGLE SPAN
LARGE MISSILE IMPACT

Sheet No.
19B/25

chris davy
3/26/2015

MAX. DESIGN PRESSURES (P.S.F.) FOR VARIOUS ANCHOR OPTIONS

MODULE WD. C.L. TO C.L.	MULLION HGT.	ANCHOR OPTIONS: ANCHOR TYPE "H1" TYPE "S1"	ANCHOR TYPE "H2" TYPE "S2"	ANCHOR TYPE "H3" TYPE "S3"
48" 52" 54" 57"	96"	+110, −143	+110, −143	+110, −130
48" 52" 54" 57"	98"			
48" 52" 54" 57"	114"			
48" 52" 54" 57"	120"	+110, −143		+110, −130
48" 52" 54" 57"	132"	+110, −143 +110, −143 +110, −140 +110, −132		
48" 52" 54" 57"	144"	+110, −143 +110, −130 +110, −125 +110, −120	+110, −143	
48" 52" 54" 57"	180"	+90, −90 +90, −90 +90, −90 +90, −90	+90, −90 +90, −90 +90, −90 +90, −90	

SEE ADDITIONAL ANCHOR CHART ON NEXT PAGE.

NOTE:
MULLION REINFORCING NOT SHOWN FOR CLARITY. SEE MULLION CHART ON PAGE 8 FOR REINFORCING REQUIREMENTS

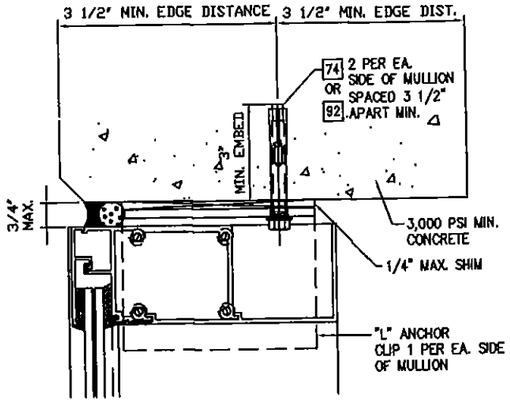

TYPE "H1" –HEAD ANCHOR

"L" ANCHOR CLIPS W/ 1/2" DIA. POWER BOLTS OR;
1/2" DIA. WEDGE BOLTS INTO CONCRETE SUBSTRATE.
3" MIN. EMBED, 3 1/2" MIN. C/C SPACING.

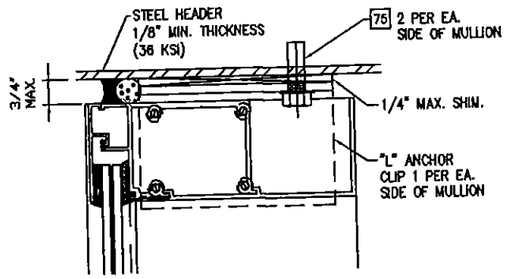

TYPE "H2" –HEAD ANCHOR

"L" ANCHOR CLIPS W/ 1/2-13 GRADE 5 ZINC. PL.
H.W.H. TAPTITE SCREWS INTO STEEL SUBSTRATE (.125" MIN. WALL TH.)

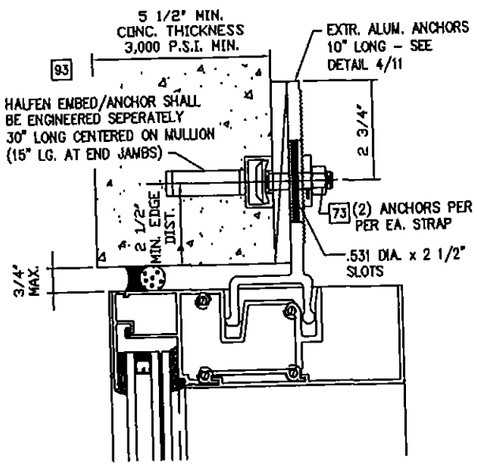

TYPE "H3" –HEAD ANCHOR

EXTRUDED ALUM. STRAP ANCHORS W/
HALFEN ENGINEERED EMBED & 1/2-13 X 2 3/8" GR. 8.8
HI-TENSILE TEE-BOLT & HEX NUT INTO CONC. SUBSTRATE

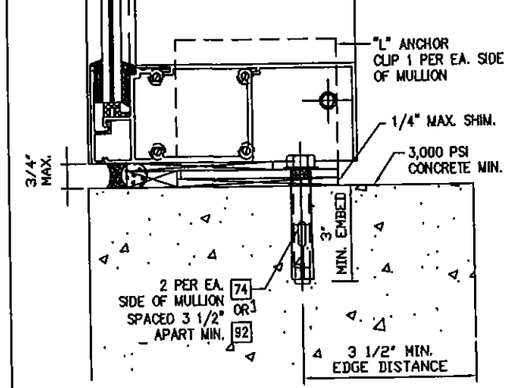

TYPE "S1" –SILL ANCHOR

"L" ANCHOR CLIPS W/ 1/2" DIA. POWER BOLTS
OR 1/2" DIA. WEDGE BOLTS INTO CONCRETE SUBSTRATE.
3" MIN. EMBED, 3 1/2" MIN. C/C SPACING.

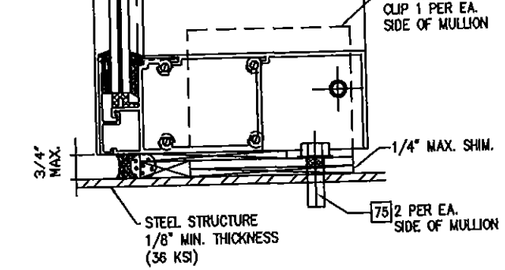

TYPE "S2" –SILL ANCHOR

"L" ANCHOR CLIPS W/ 1/2-13 X GRADE 5 ZINC. PL.
H.W.H. TAPTITE SCREWS INTO STEEL SUBSTRATE (.125" MIN. WALL TH.)

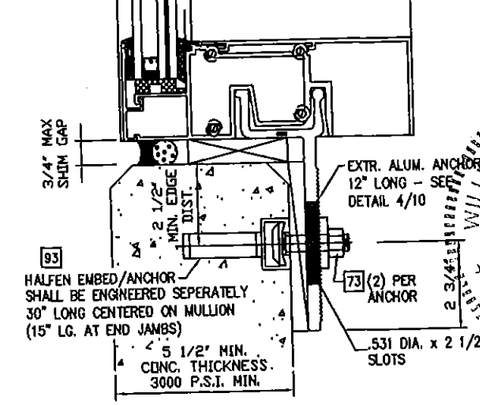

TYPE "S3" –SILL ANCHOR

EXTRUDED ALUM. STRAP ANCHORS W/
HALFEN ENGINEERED EMBED & 1/2-13 X 2 3/8" GR. 8.8
HI-TENSILE TEE-BOLT & HEX NUT

FOR MIAMI-DADE CO. B.C.C.O.

PRODUCT REVISED
as complying with the Florida Building Code
Acceptance No 14-0930.22
Expiration Date Sept 9, 2019
By Manuel Perez
Miami-Dade Product Control

enclos corp
2770 Blue Water Road
Eagan, MN 55121-1400
Tel. 651-796-6100 • Fax 651-994-6360
Engineering Locations
Eagan, MN • Montreal, QC, CA • Moncton, NB, CA
St. Louis, MO • Manila, PH

REVISIONS

1	3/7/2015 REV'S PER P.C.E.

BROWLEY · COOK ENGINEERING, INC.
STRUCTURAL ENGINEERING SERVICES
5440 N.W. 33RD AVENUE SUITE 102
FORT LAUDERDALE, FLORIDA 33309
TEL: (954) 772-4624 FAX: (954) 772-4653
CERT. OF AUTH. #00009124
WILLIAM D. COOK P.E.
FLA.P.E. # 43904
FLA S.I. # 2008

WILLIAM D. COOK LICENSE No 43904 STATE OF FLORIDA PROFESSIONAL ENGINEER
MAR 30 2015
Reviewed For Structural Integrity Only

Date	Scale
9/05/14	

Drawing No.
7030 SS LMI

Drawing Title
7030 SERIES WINDOW WALL
SINGLE SPAN
LARGE MISSILE IMPACT

Sheet No.
20/25

chris davy
3/30/2015

MAX. DESIGN PRESSURES (P.S.F.) FOR VARIOUS ANCHOR OPTIONS

MODULE WD. C.L. TO C.L.	MULLION HGT.	ANCHOR OPTIONS			
		ANCHOR TYPE "H4" TYPE "S4"	ANCHOR TYPE "H5" TYPE "S5"	ANCHOR TYPE "S6"	ANCHOR TYPE "S7"
48" 52" 54" 57"	96"	+110, −130 +110, −120 +110, −115 +110, −110	+110, −143 +110, −130 +110, −125 +110, −120	+110, −143	+110, −143 +110, −130 +110, −125 +110, −120
48" 52" 54" 57"	98"	+110, −120 +110, −115 +110, −110 +105, −105	+110, −130 +110, −125 +110, −120 +110, −115		+110, −130 +110, −125 +110, −120 +110, −115
48" 52" 54" 57"	114"	+110, −110 +100, −100 +95, −95 +90, −90	+110, −115 +110, −110 +105, −105 +100, −100		+110, −115 +110, −110 +105, −105 +100, −100
48" 52" 54" 57"	120"	+100, −100 +95, −95 +90, −90 +85, −85	+110, −110 +105, −105 +100, −100 +95, −95		+110, −110 +105, −105 +100, −100 +95, −95
48" 52" 54" 57"	132"				
48" 52" 54" 57"	144"			+110, −143	
48" 52" 54" 57"	180"			+90, −90 +90, −90 +90, −90 +90, −90	

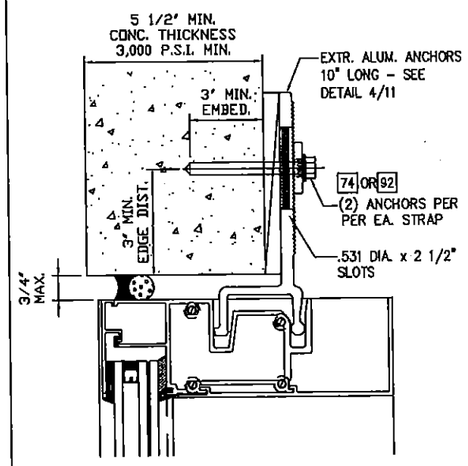

TYPE "H4" –HEAD ANCHOR

EXTRUDED ALUMINUM STRAP ANCHOR W/ 1/2" DIA. POWER BOLTS OR 1/2" DIA. WEDGE BOLTS INTO CONCRETE SUBSTRATE.
3" MIN. EMBED, 4" MIN. C/C SPACING.

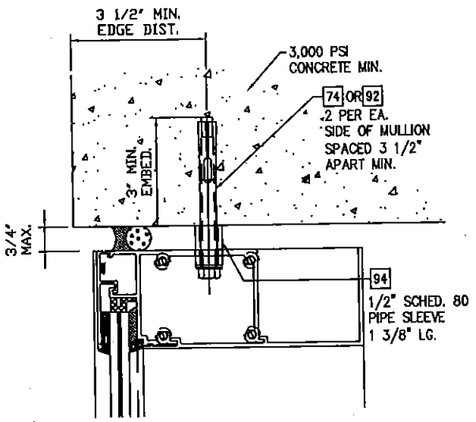

TYPE "H5" –HEAD ANCHOR

THRU HEAD CAN W/ 1/2" DIA. POWER BOLTS
OR;
1/2" DIA. WEDGE BOLTS INTO CONCRETE SUBSTRATE.
3" MIN. EMBED, 3 1/2" MIN. C/C SPACING.

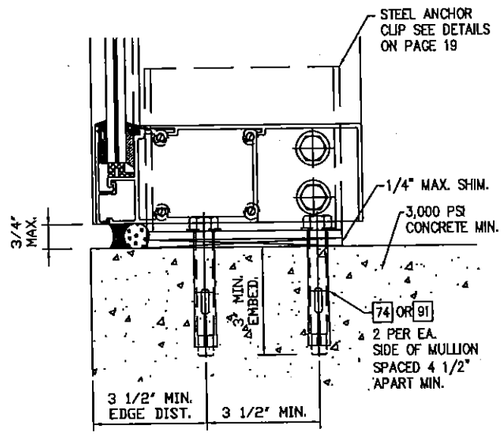

TYPE "S6" –SILL ANCHOR (@ DOOR MULLION)

STEEL "U" ANCHOR CLIPS W/ 1/2" DIA. POWER BOLTS
OR WEDGE BOLTS INTO CONC. SUBSTRATE (3" MIN. EMBED)

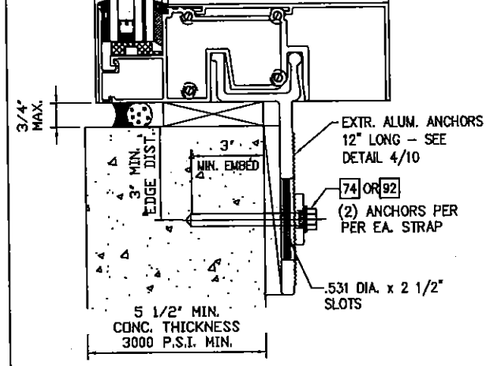

TYPE "S4" –SILL ANCHOR

EXTRUDED ALUMINUM STRAP ANCHOR W/ 1/2" DIA. POWER BOLTS
OR;
1/2" DIA. WEDGE BOLTS INTO CONCRETE SUBSTRATE.
3" MIN. EMBED, 4" MIN. C/C SPACING.

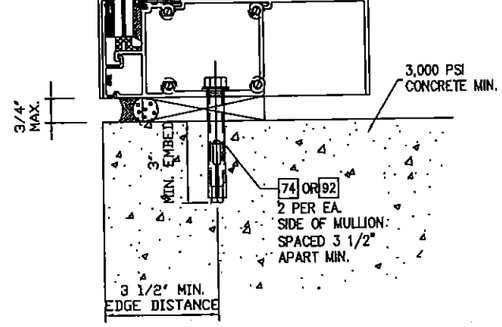

TYPE "S5" –SILL ANCHOR

THRU HEAD CAN W/ 1/2" DIA. POWER BOLTS
OR;
1/2" DIA. WEDGE BOLTS INTO CONCRETE SUBSTRATE.
3" MIN. EMBED, 3 1/2" MIN. C/C SPACING.

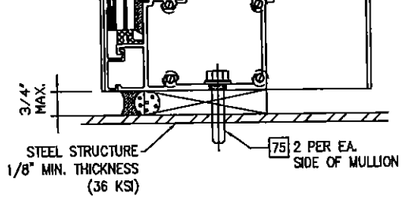

TYPE "S7" –SILL ANCHOR

THRU SILL CAN ANCHOR W/ 1/2–13 GRADE 5 ZINC. PL.
H.W.H. TAPTITE SCREWS INTO STEEL SUBSTRATE (.125" MIN. WALL TH.)

FOR MIAMI–DADE CO. B.C.C.O.

PRODUCT REVISED
as complying with the Florida
Building Code
Acceptance No 14.0930.22
Expiration Date Sept. 9, 2019
By Manuel Perez
Miami-Dade Product Control

enclos corp
2770 Blue Water Road
Eagan, MN 55121-1400
Tel. 651-796-6100 • Fax 651-994-6580
Engineering Locations
Eagan, MN • Montreal, QC, CA • Moncton, NB, CA
St. Louis, MO • Manila, PH

REVISIONS

1	3/7/2015 REV'S PER P.C.E.

WILLIAM D. COOK LICENSE No 43904 STATE OF FLORIDA PROFESSIONAL ENGINEER SEAL
MAR 10 2015
Reviewed for Structural Integrity Only

BROMLEY - COOK ENGINEERING, INC.
STRUCTURAL ENGINEERING SERVICES
5440 N.W. 33RD AVENUE SUITE 105
FORT LAUDERDALE, FLORIDA 33309
TEL: (954) 772-4624 FAX: (954) 772-4634
CERT. OF AUTH. #00009124
WILLIAM D. COOK P.E.
FLA P.E. # 43904
FLA S.I. # 2008

Date	Scale
9/05/14	

Drawing No.
7030 SS LMI

Drawing Title
7030 SERIES WINDOW WALL
SINGLE SPAN
LARGE MISSILE IMPACT

Sheet No.
21/25

chris davy
3/26/2015

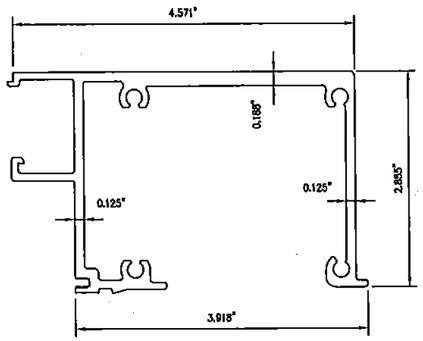

41139 (HEAD–SILL 9/16" CAPTURED)

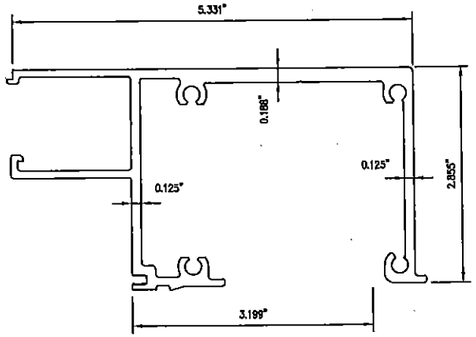

41140 (HEAD–SILL 1 3/8" CAPTURED)

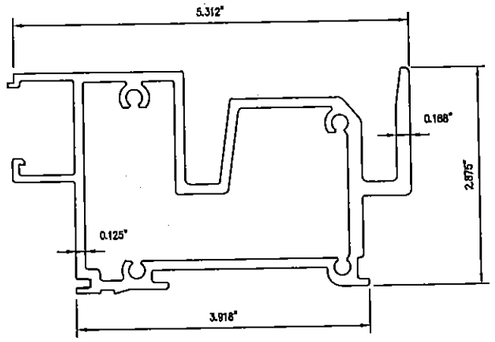

41103 (HEAD–SILL 9/16" CAPTURED)
(FOR STRAP ANCHOR)

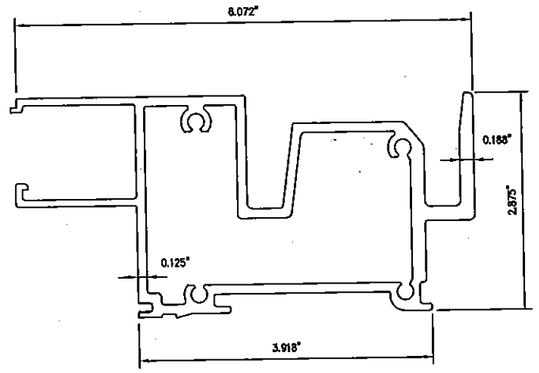

41039 (HEAD–SILL 1 3/8" CAPTURED)
(FOR STRAP ANCHOR)

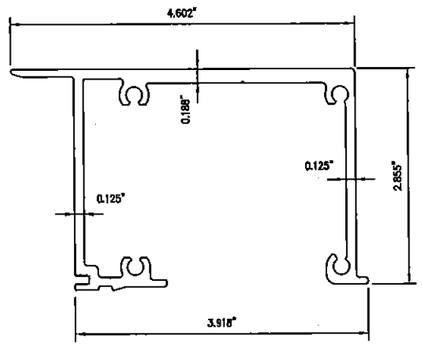

41116 (HEAD–SILL 9/16" SSG)

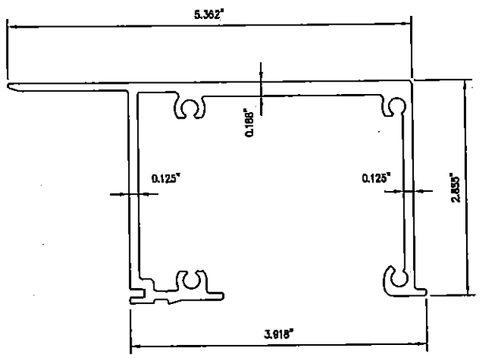

41117 (HEAD–SILL 1 3/8" SSG)

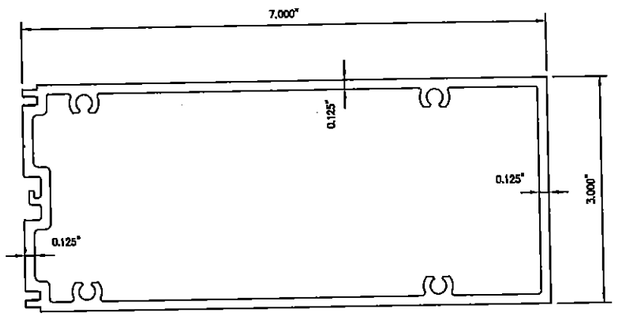

41048 (INTERMEDIATE HORIZONTAL)

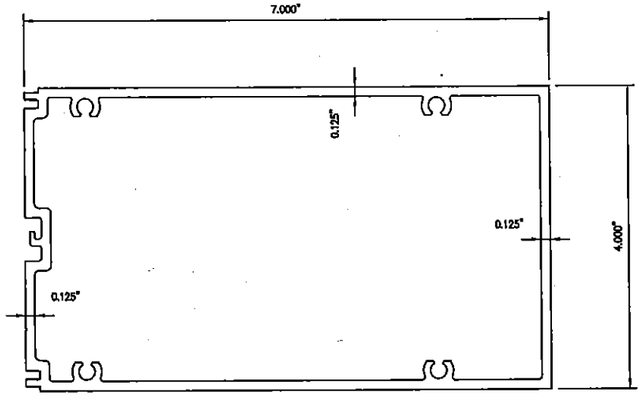

41118 (INTERMEDIATE HORIZONTAL)

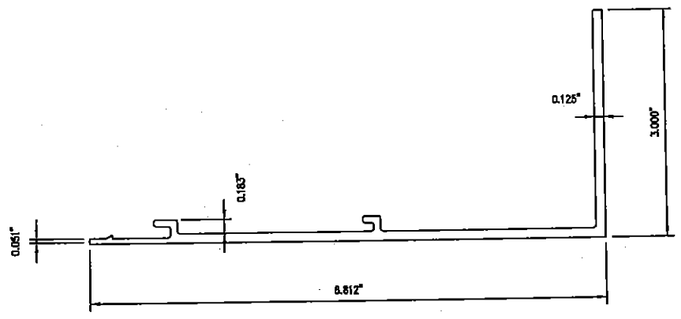

41047 INTERIOR COVER

EXTRUSIONS (6063–T6 ALLOY)

FOR MIAMI–DADE CO. B.C.C.O.

PRODUCT REVISED
as complying with the Florida
Building Code
Acceptance No 14-0930.22
Expiration Date Sept. 9, 2019
By Manuel Perez
Miami Dade Product Control

enclos corp

2770 Blue Water Road
Eagan, MN 55121-1400
Tel. 651-796-6100 • Fax 651-994-6360
Engineering Locations
Eagan, MN • Montreal, QC, CA • Moncton, NB, CA
St. Louis, MO • Manila, PH

REVISIONS

1	3/7/2015 REV'S PER P.C.E.

WILLIAM D. COOK LICENSE No 43904 STATE OF FLORIDA PROFESSIONAL ENGINEER SEAL
MAR 5 05 2015
Reviewed For Structural Integrity Only

BROMLEY - COOK ENGINEERING, LTD.
STRUCTURAL ENGINEERING SERVICES
5440 N.W. 33RD AVENUE SUITE 190
FORT LAUDERDALE, FLORIDA 33309
TEL (954) 772-4624 FAX (954) 772-4634
CERT. OF AUTH. #00009124
WILLIAM D. COOK P.E.
FLA P.E. # 43904
FLA S.I. # 2008

Date	Scale
9/05/14	

Drawing No.
7030 SS LMI

Drawing Title
7030 SERIES WINDOW WALL
SINGLE SPAN
LARGE MISSILE IMPACT

Sheet No.
22/25

chris davy
3/26/2015

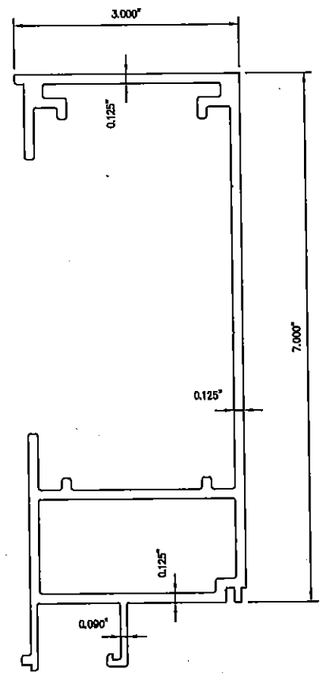

41042 (JAMB 9/16" CAPTURED)
Ix–x = 20.68in⁴
Sx–x = 5.24in³

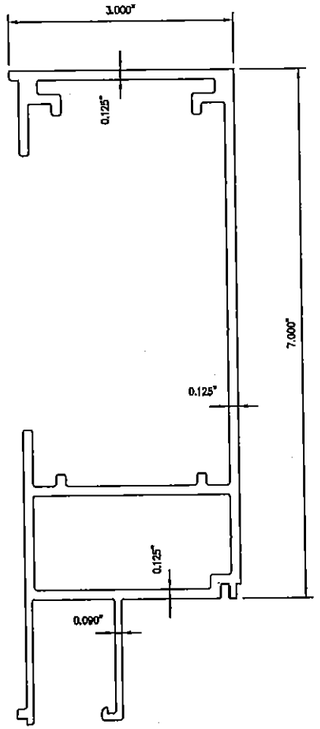

41100 (JAMB 1 3/8" CAPTURED)
Ix–x = 27.67in⁴
Sx–x = 6.50in³

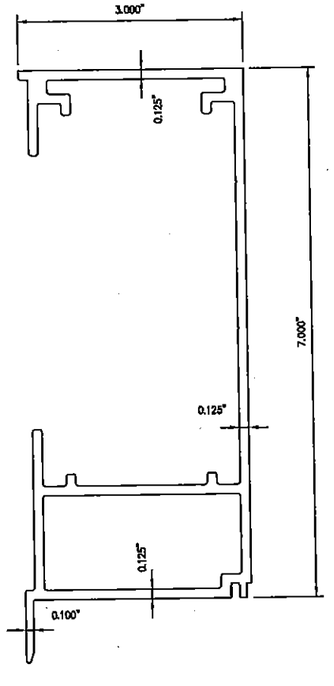

41107 (JAMB 9/16" SSG)
Ix–x = 22.13in⁴
Sx–x = 5.77in³

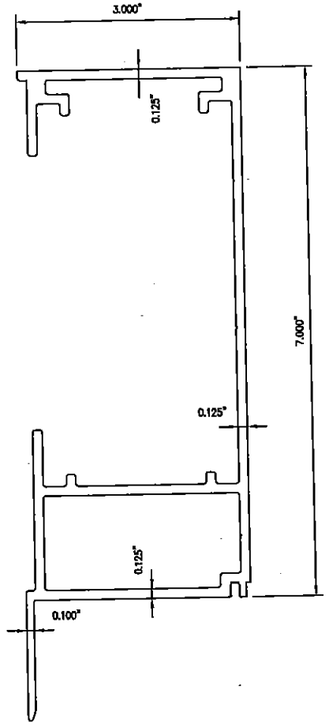

41108 (JAMB 1 3/8" SSG)
Ix–x = 24.03in⁴
Sx–x = 6.04in³

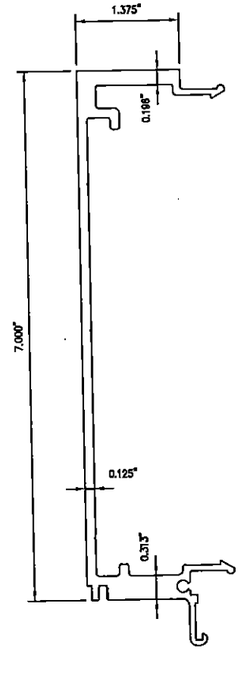

41124 (MALE MULLION)
(3" WIDE MULLION)

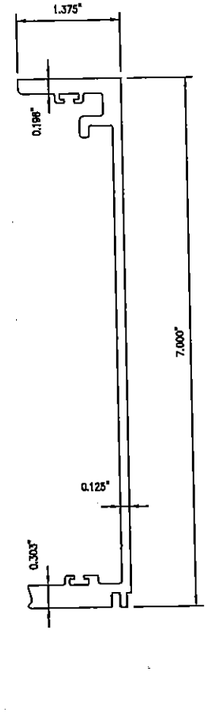

41125 (FEMALE MULLION)
(3" WIDE MULLION)

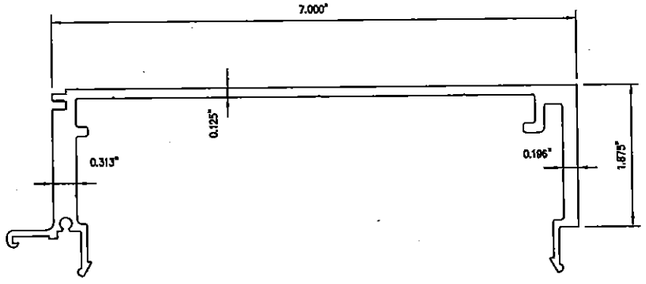

41126 (MALE MULLION)
(4" WIDE MULLION)

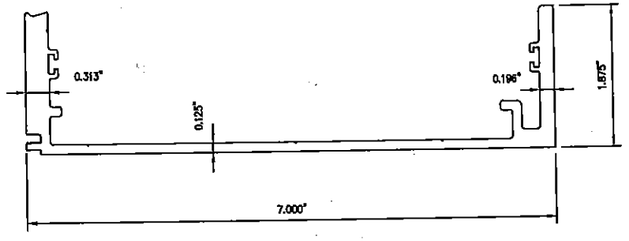

41127 (FEMALE MULLION)
(4" WIDE MULLION)

FOR MIAMI–DADE CO. B.C.C.O.

PRODUCT REVISED
as complying with the Florida
Building Code
Acceptance No 14-0930.22
Expiration Date Sept 9, 2019
By Manuel Perez
Miami-Dade Product Control

WILLIAM D. COOK LICENSE No 43904 STATE OF FLORIDA PROFESSIONAL ENGINEER SEAL
MAR 30 2015
Reviewed For Structural Integrity Only

enclos corp

2770 Blue Water Road
Eagan, MN 55121–1400
Tel. 651–796–6100 • Fax 651–994–6360
Engineering Locations
Eagan, MN • Montreal, QC, CA • Moncton, NB, CA
St. Louis, MO • Manila, PH

REVISIONS
1 3/7/2015 REV'S PER P.C.E.

BROMLEY · COOK ENGINEERING, P.C.
STRUCTURAL ENGINEERING SERVICES
5440 N.W. 33RD AVENUE SUITE 140
FORT LAUDERDALE, FLORIDA 33309
TEL: (954) 772–4624 FAX: (954) 772–4634
CERT. OF AUTH. #00009124
WILLIAM D. COOK P.E.
FLA P.E. # 43904
FLA SI. # 2008

Date	Scale
9/05/14	

Drawing No.
7030 SS LMI

Drawing Title
7030 SERIES WINDOW WALL
SINGLE SPAN
LARGE MISSILE IMPACT

Sheet No.
23/25

chris dery
3/26/2015

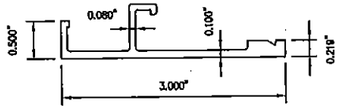

41101 (JAMB FACE COVER)

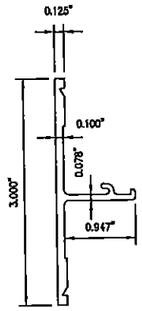

41028 (INT. HORIZ. FACE COVER)

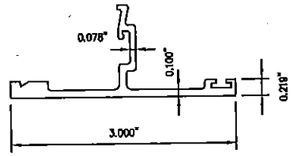

41128 (MULLION FACE COVER)
(9/16" GLAZING)

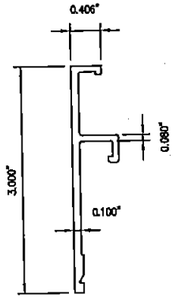

41102 (HEAD–SILL FACE COVER)

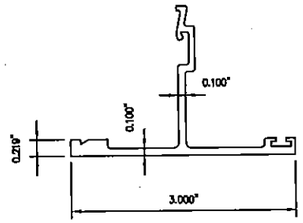

41129 (MULLION FACE COVER)
(1 3/8" GLAZING)

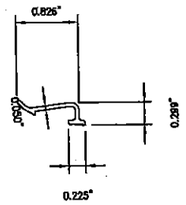

41011 (ANTI–BUCKLING CLIP)

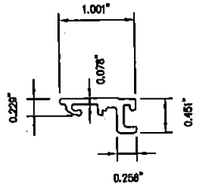

41027 (GLASS SETTING LEG)
(9/16" GLAZING)

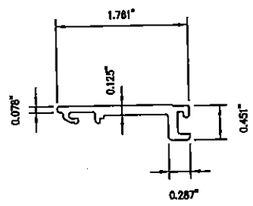

41043 (GLASS SETTING LEG)
(1 3/8" GLAZING)

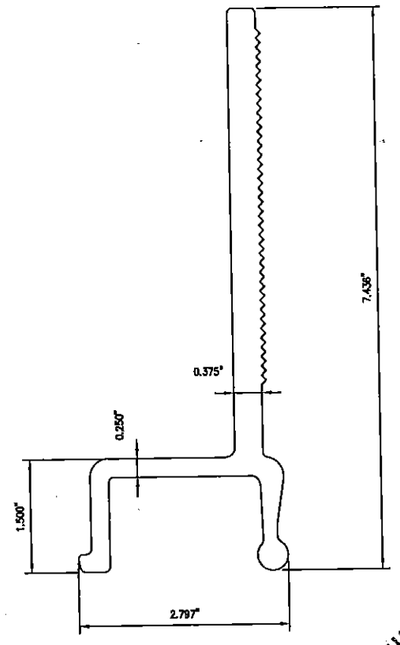

41016 (STRAP ANCHOR)
(FOR PRE–CAST WALL)
6105–T5

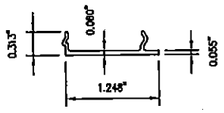

41092 (FLUSH FILLER)
(FOR DOOR MULLIONS)

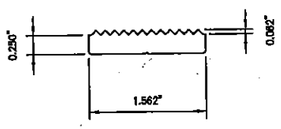

41012 (STRAP ANCHOR)
(POSITION LOCK)
6105–T5

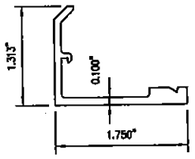

41200 (CORNER MULL. FACE COVER)
(9/16" GLAZING)

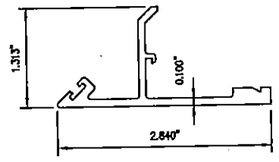

41201 (CORNER MULL. FACE COVER)
(9/16" GLAZING)

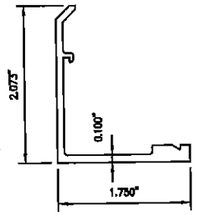

41202 (CORNER MULL. FACE COVER)
(1 3/8" GLAZING)

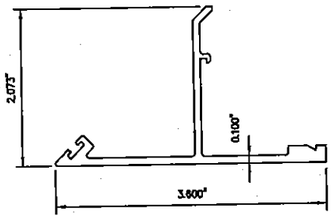

41203 (CORNER MULL. FACE COVER)
(1 3/8" GLAZING)

EXTRUSIONS (6063–T6 ALLOY)
U.N.O.

FOR MIAMI–DADE CO. B.C.C.O.

PRODUCT REVISED
as complying with the Florida
Building Code
Acceptance No 14-0930.22
Expiration Date Sept. 9, 2019
By
Miami Dade Product Control

enclos corp

2770 Blue Water Road
Eagan, MN 55121–1400
Tel. 651–796–6100 • Fax 651–994–6360

Engineering Locations
Eagan, MN • Montreal, QC, CA • Moncton, NB, CA
St. Louis, MO • Manila, PH

REVISIONS

1	3/7/2016 REV'S PER P.C.E.

WILLIAM D. COOK LICENSE No 43904 STATE OF FLORIDA PROFESSIONAL ENGINEER SEAL
MAR 3 0 2015
Reviewed For Structural Integrity Only

BROMLEY - COOK ENGINEERING, INC.
STRUCTURAL ENGINEERING SERVICES
5440 N.W. 33RD AVENUE SUITE 224
FORT LAUDERDALE, FLORIDA 33309
TEL: (954) 772–4624 FAX: (954) 772–4625
CERT. OF AUTH. #00009124
WILLIAM D. COOK P.E.
FLA P.E. # 43904
FLA S.I. # 2008

Date	Scale
9/05/14	

Drawing No.
7030 SS LMI

Drawing Title
7030 SERIES WINDOW WALL
SINGLE SPAN
LARGE MISSILE IMPACT

Sheet No.
24/25

circle story

3/26/2015

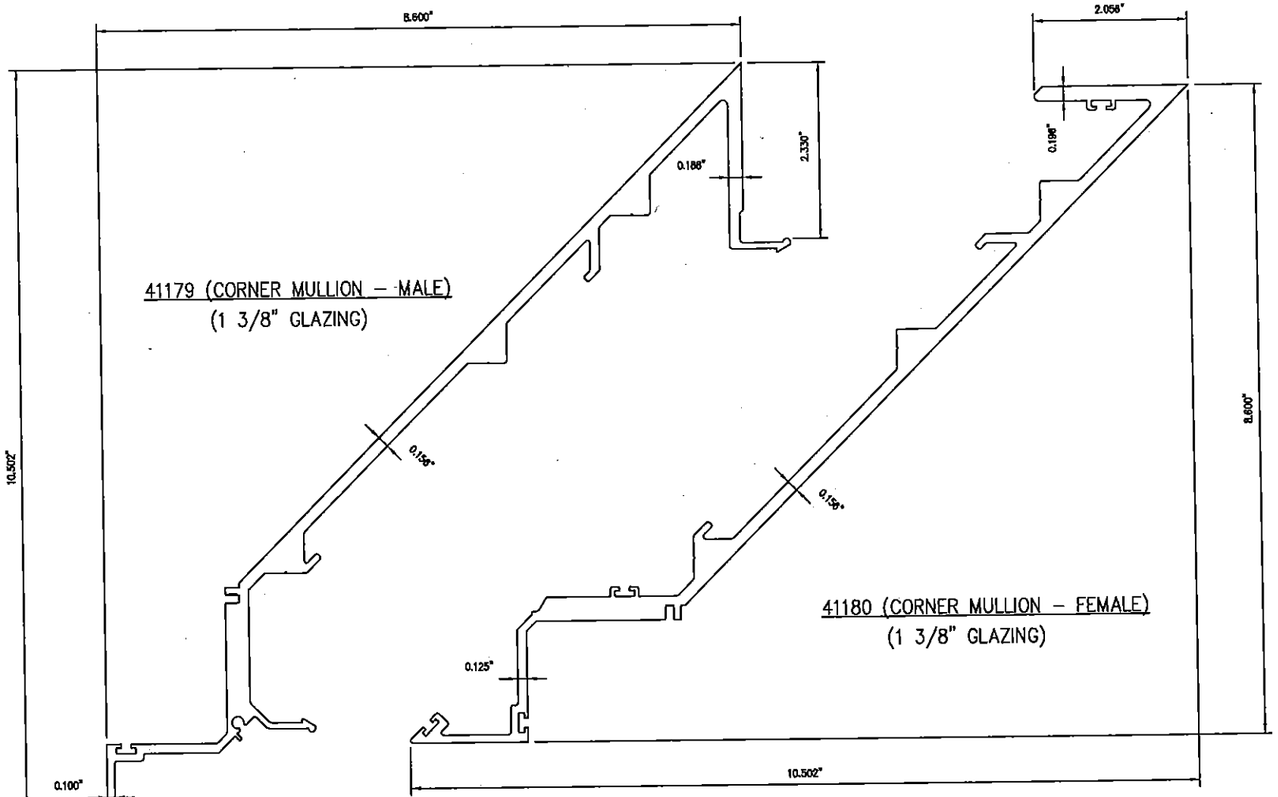

41179 (CORNER MULLION – MALE)
(1 3/8" GLAZING)

41180 (CORNER MULLION – FEMALE)
(1 3/8" GLAZING)

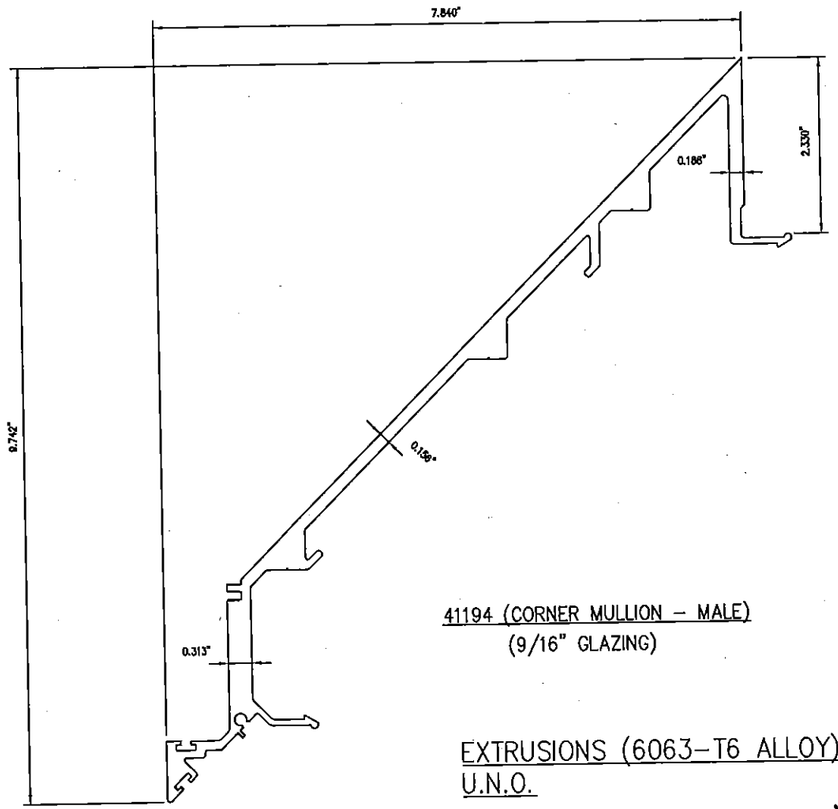

41194 (CORNER MULLION – MALE)
(9/16" GLAZING)

EXTRUSIONS (6063-T6 ALLOY)
U.N.O.

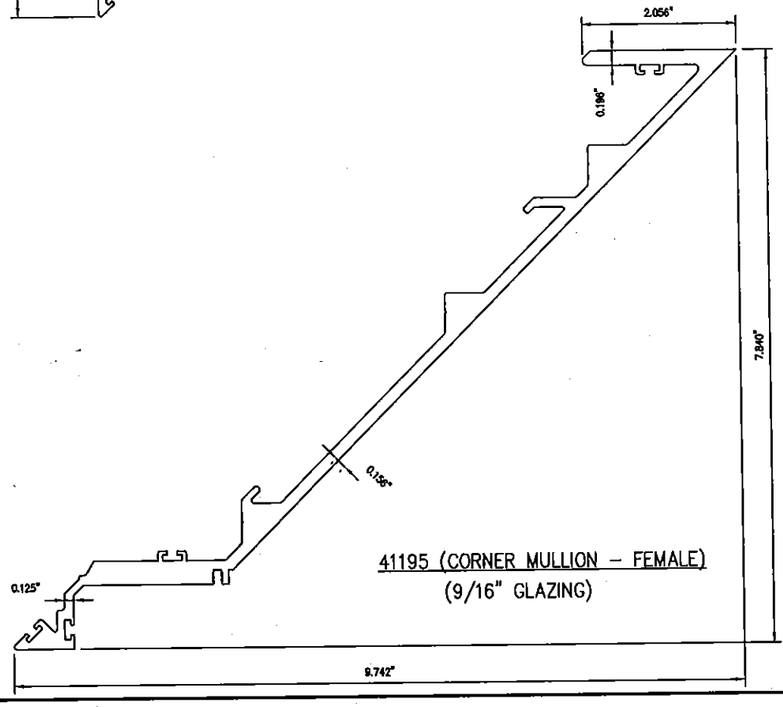

41195 (CORNER MULLION – FEMALE)
(9/16" GLAZING)

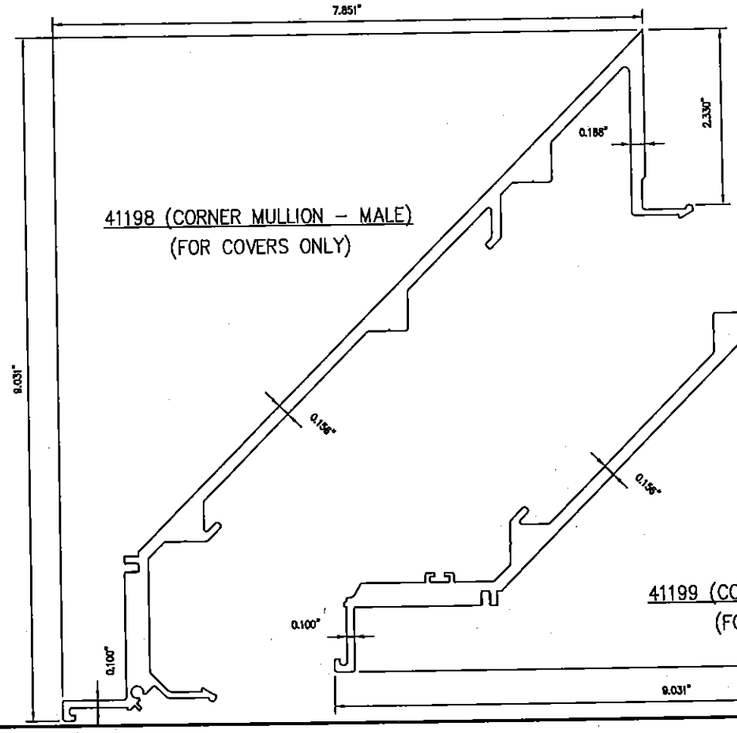

41198 (CORNER MULLION – MALE)
(FOR COVERS ONLY)

41199 (CORNER MULLION – FEMALE)
(FOR COVERS ONLY)

FOR MIAMI-DADE CO. B.C.C.O.

PRODUCT REVISED
as complying with the Florida
Building Code
Acceptance No 14-0930.22
Expiration Date Sept 9, 2019
By Manuel Perez
Miami Dade Product Control

enclos corp

2770 Blue Water Road
Eagan, MN 55121-1400
Tel. 651-796-6100 • Fax 651-994-6360
Engineering Locations
Eagan, MN • Montreal, QC, CA • Moncton, NB, CA
St. Louis, MO • Manila, PH

REVISIONS

1	3/7/2015 REV'S PER P.C.E.

WILLIAM D. COOK SEAL
LICENSE No 43904
STATE OF FLORIDA
PROFESSIONAL ENGINEER
MAR 30 2015
Reviewed For Structural Integrity Only

BROMLEY · COOK ENGINEERING, INC.
STRUCTURAL ENGINEERING SERVICES
5440 N.W. 33RD AVENUE SUITE 108
FORT LAUDERDALE, FLORIDA 33309-6
TEL: (954) 772-4624 FAX: (954) 772-4631
CERT. OF AUTH. #00009124
WILLIAM D. COOK P.E.
FLA P.E. # 43904
FLA S.I. # 2008

Date	Scale
9/05/14	

Drawing No.
7030 SS LMI

Drawing Title
7030 SERIES WINDOW WALL
SINGLE SPAN
LARGE MISSILE IMPACT

Sheet No.
24A/25

chris devy
3/26/2015

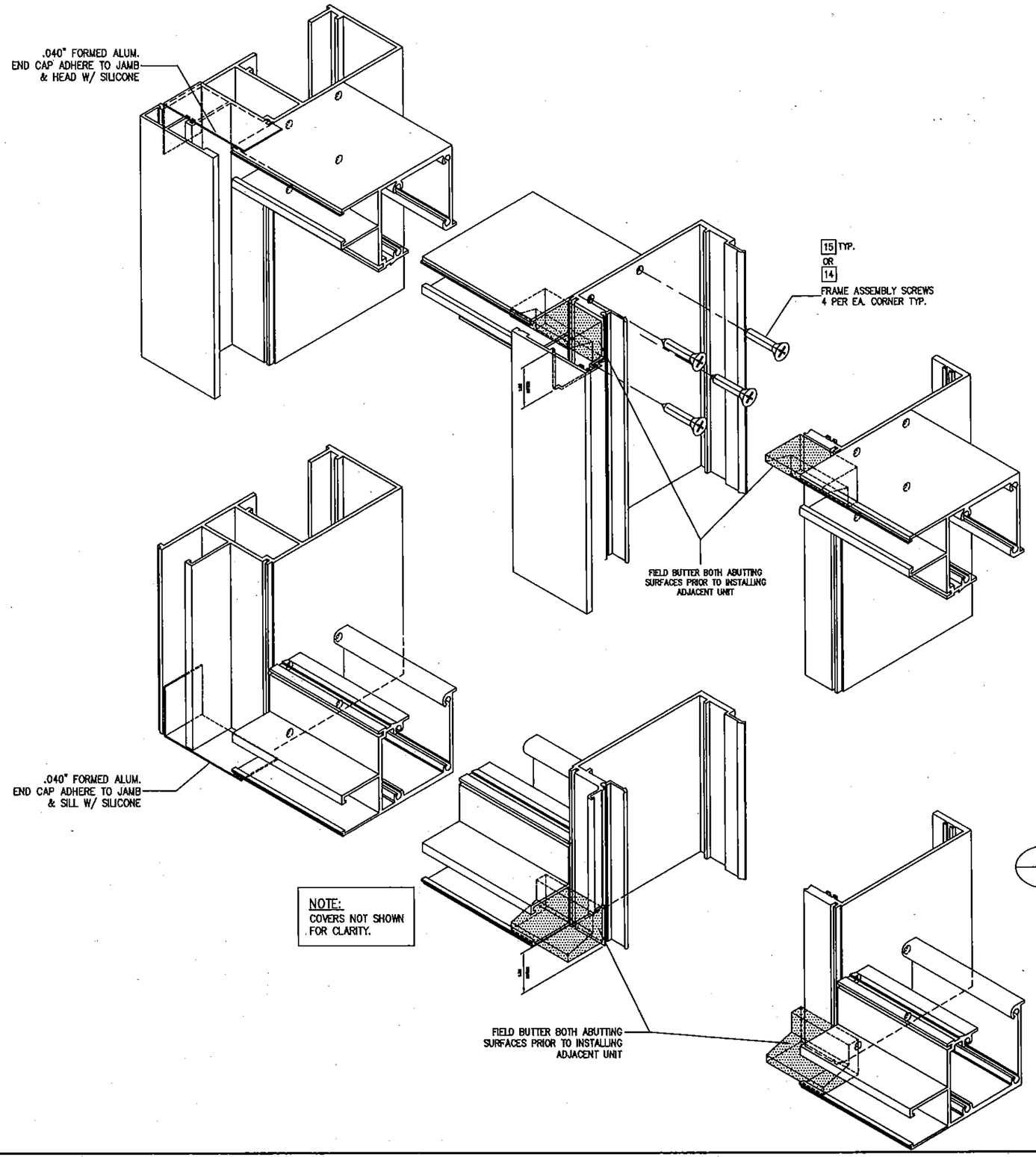

1/25 HEAD RAIL ISOMETRIC JOINERY DETAILS
SCALE: N.T.S.

2/25 SILL RAIL ISOMETRIC JOINERY DETAILS
SCALE: N.T.S.

FOR MIAMI-DADE CO. B.C.C.O.

PRODUCT REVISED
as complying with the Florida
Building Code
Acceptance No 14-0930.22
Expiration Date Sept. 9, 2019
By Manuel Perez
Miami-Dade Product Control

enclos corp

2770 Blue Water Road
Eagan, MN 55121-1400
Tel. 651-796-6100 • Fax 651-994-6360
Engineering Locations
Eagan, MN • Montreal, QC, CA • Moncton, NB, CA
St. Louis, MO • Manila, PH

REVISIONS	
1	3/7/2015 REV'S PER P.C.E.

WILLIAM D. COOK LICENSE No 43904 STATE OF FLORIDA PROFESSIONAL ENGINEER
MAR 3 0 2015
Revised For Structural Integrity Only

BROMLEY · COOK ENGINEERING, INC.
STRUCTURAL ENGINEERING SERVICES
5440 N.W. 33RD AVENUE SUITE 100
FORT LAUDERDALE, FLORIDA 33309
TEL: (954) 772-4524 FAX: (954) 772-4574
CERT. OF AUTH. #00009124
WILLIAM D. COOK P.E.
FLA P.E. # 43904
FLA S.I. # 2008

Date	Scale
9/05/14	

Drawing No.
7030 SS LMI

Drawing Title
7030 SERIES WINDOW WALL
SINGLE SPAN
LARGE MISSILE IMPACT

Sheet No.
25/25

3/28/2015 chris davy