MIAMI-DADE COUNTY
DEPARTMENT OF REGULATORY AND ECONOMIC RESOURCES (RER)
BOARD AND CODE ADMINISTRATION DIVISION

MIAMI-DADE COUNTY
PRODUCT CONTROL SECTION
11805 SW 26 Street, Room 208
T (786) 315-2590 F (786) 315-2599
www.miamidade.gov/economy

NOTICE OF ACCEPTANCE (NOA)

PGT Industries, Inc.
1070 Technology Drive
North Venice, FL 34275

SCOPE:

This NOA is being issued under the applicable rules and regulations governing the use of construction materials. The documentation submitted has been reviewed and accepted by Miami-Dade County RER - Product Control Section to be used in Miami Dade County and other areas where allowed by the Authority Having Jurisdiction (AHJ).

This NOA shall not be valid after the expiration date stated below. The Miami-Dade County Product Control Section (In Miami Dade County) and/or the AHJ (in areas other than Miami Dade County) reserve the right to have this product or material tested for quality assurance purposes. If this product or material fails to perform in the accepted manner, the manufacturer will incur the expense of such testing and the AHJ may immediately revoke, modify, or suspend the use of such product or material within their jurisdiction. RER reserves the right to revoke this acceptance, if it is determined by Miami-Dade County Product Control Section that this product or material fails to meet the requirements of the applicable building code.

This product is approved as described herein, and has been designed to comply with the Florida Building Code, including the High Velocity Hurricane Zone.

DESCRIPTION: Series "PW-5420 Vinyl" PVC Fixed Window – N.I.

APPROVAL DOCUMENT: Drawing No. **MD-5420.0** titled "Vinyl Fixed Window NOA (NI)", sheets 1 through 9 of 9, dated 09/09/14, prepared by manufacturer, signed and sealed by Anthony Lynn Miller, P.E., bearing the Miami-Dade County Product Control Section Approval stamp with the Notice of Acceptance number and approval date by the Miami-Dade County Product Control Section.

MISSILE IMPACT RATING: None.

LABELING: Each unit shall bear a permanent label with the manufacturer's name or logo, city, state, model/series, and following statement: "Miami-Dade County Product Control Approved", unless otherwise noted herein.

RENEWAL of this NOA shall be considered after a renewal application has been filed and there has been no change in the applicable building code negatively affecting the performance of this product.

TERMINATION of this NOA will occur after the expiration date or if there has been a revision or change in the materials, use, and/or manufacture of the product or process. Misuse of this NOA as an endorsement of any product, for sales, advertising or any other purposes shall automatically terminate this NOA. Failure to comply with any section of this NOA shall be cause for termination and removal of NOA.

ADVERTISEMENT: The NOA number preceded by the words Miami-Dade County, Florida, and followed by the expiration date may be displayed in advertising literature. If any portion of the NOA is displayed, then it shall be done in its entirety.

INSPECTION: A copy of this entire NOA shall be provided to the user by the manufacturer or its distributors and shall be available for inspection at the job site at the request of the Building Official.

This NOA consists of this page 1 and evidence pages E-1 and E-2, as well as approval document mentioned above.

The submitted documentation was reviewed by **Manuel Perez, P.E.**

MIAMI-DADE COUNTY APPROVED

4/23/15

NOA No. 14-0930.24
Expiration Date: April 30, 2020
Approval Date: April 30, 2015

NOTICE OF ACCEPTANCE: EVIDENCE SUBMITTED

A. DRAWINGS

1. Manufacturer's die drawings and sections.
2. Drawing No. **MD-5420.0** titled "Vinyl Fixed Window NOA (NI)", sheets 1 through 9 of 9, dated 09/09/14, prepared by manufacturer, signed and sealed by Anthony Lynn Miller, P.E.

B. TESTS

1. Test reports on: 1) Air Infiltration Test, per FBC, TAS 202–94
   2) Uniform Static Air Pressure Test, Loading per FBC, TAS 202–94
   3) Water Resistance Test, per FBC, TAS 202–94
   4) Large Missile Impact Test per FBC, TAS 201–94
   5) Cyclic Wind Pressure Loading per FBC, TAS 203–94
   6) Forced Entry Test, per FBC 2411.3.2.1, and TAS 202–94

   along with marked–up drawings and installation diagram of a PVC fixed window, prepared by Fenestration Testing Laboratory, Inc., Test Report No. **FTL-7897**, dated 08/01/14, signed and sealed by Idalmis Ortega, P.E.

C. CALCULATIONS

1. Anchor verification calculations and structural analysis, complying with **FBC-5th Edition (2014)**, dated 09/18/14 and 04/07/15, prepared by manufacturer, signed and sealed by Anthony Lynn Miller, P.E.
2. Glazing complies with **ASTM E1300-09**

D. QUALITY ASSURANCE

1. Miami–Dade Department of Regulatory and Economic Resources (RER).

E. MATERIAL CERTIFICATIONS

1. Notice of Acceptance No. **12-1120.02** issued to Royal Window and Door Profiles, Plant 13 for their "**White Rigid PVC Exterior Extrusions for Windows and Doors**" dated 02/28/13, expiring on 02/28/18.
2. Notice of Acceptance No. **14-0529.13** issued to Royal Window and Door Profiles, Plant 13 for their "**Bronze and Lighter Shades of Cap Coated Rigid PVC Exterior Extrusions for Windows and Doors**" dated 04/16/15, expiring on 04/16/20.
3. Notice of Acceptance No. **14-0529.14** issued to Royal Window and Door Profiles, Plant 13 for their "**Performance Core Rigid PVC Exterior Extrusions for Windows and Doors**" dated 04/16/15, expiring on 04/16/20.

Manuel Perez, P.E.
Product Control Examiner
NOA No. 14-0930.24
Expiration Date: April 30, 2020
Approval Date: April 30, 2015

NOTICE OF ACCEPTANCE: EVIDENCE SUBMITTED

F. STATEMENTS

1. Statement letter of conformance, complying with **FBC -2010** and **FBC-5th Edition (2014)**, dated September 27, 2014, issued by manufacturer, signed and sealed by Anthony Lynn Miller, P.E.
2. Statement letter of no financial interest, dated September 27, 2014, issued by manufacturer, signed and sealed by Anthony Lynn Miller, P.E.
3. Proposal issued by Product Control, dated 6/26/14, signed by Jaime Gascon, P.E. Supervisor, Product Control Section.

G. OTHERS

1. None.

Manuel Perez

Manuel Perez, P.E.
Product Control Examiner
NOA No. 14-0930.24
Expiration Date: April 30, 2020
Approval Date: April 30, 2015

GENERAL NOTES: SERIES 5420
NON-IMPACT RESISTANT, VINYL FIXED WINDOW

1) THIS PRODUCT HAS BEEN DESIGNED & TESTED TO COMPLY WITH THE REQUIREMENTS OF THE FLORIDA BUILDING CODE, INCLUDING THE HIGH VELOCITY HURRICANE ZONE (HVHZ).

2) SHUTTERS ARE REQUIRED WHEN USED IN WIND-BORNE DEBRIS REGIONS.

3) FOR MASONRY APPLICATIONS IN MIAMI-DADE COUNTY, USE ONLY MIAMI-DADE COUNTY APPROVED MASONRY ANCHORS. MATERIALS USED FOR ANCHOR EVALUATIONS WERE SOUTHERN PINE, ASTM C90 CONCRETE MASONRY UNITS AND CONCRETE WITH MIN. KSI PER ANCHOR TYPE.

4) ALL WOOD BUCKS LESS THAN 1-1/2" THICK ARE TO BE CONSIDERED 1X INSTALLATIONS. 1X WOOD BUCKS ARE OPTIONAL IF UNIT IS INSTALLED DIRECTLY TO SUBSTRATE. WOOD BUCKS DEPICTED AS 2X ARE 1-1/2" THICK OR GREATER. 1X AND 2X BUCKS (WHEN USED) SHALL BE DESIGNED TO PROPERLY TRANSFER LOADS TO THE STRUCTURE. WOOD BUCK DESIGN AND INSTALLATION IS THE RESPONSIBILITY OF THE ENGINEER, (EOR) OR ARCHITECT OF RECORD, (AOR).

5) ANCHOR EMBEDMENT TO BASE MATERIAL SHALL BE BEYOND WALL DRESSING OR STUCCO. USE ANCHORS OF SUFFICIENT LENGTH TO ACHIEVE EMBEDMENT. INSTALLATION ANCHORS SHOULD BE SEALED. OVERALL SEALING/FLASHING STRATEGY FOR WATER RESISTANCE OF INSTALLATION SHALL BE DONE BY OTHERS AND IS BEYOND THE SCOPE OF THESE INSTRUCTIONS.

6) MAX. 1/4" SHIMS ARE REQUIRED AT EACH ANCHOR LOCATION WHERE THE PRODUCT IS NOT FLUSH TO THE SUBSTRATE. USE SHIMS CAPABLE OF TRANSFERRING APPLIED LOADS. WOOD BUCKS, BY OTHERS, MUST BE SUFFICIENTLY ANCHORED TO RESIST LOADS IMPOSED ON THEM BY THE WINDOW.

7) DESIGN PRESSURES:
A. NEGATIVE DESIGN LOADS BASED ON STRUCTURAL TEST PRESSURE, FRAME ANALYSIS AND GLASS PER ASTM E1300.
B. POSITIVE DESIGN LOADS BASED ON WATER TEST PRESSURE, STRUCTURAL TEST PRESSURE, FRAME ANALYSIS AND GLASS PER ASTM E1300.

8) THE ANCHORAGE METHODS SHOWN HAVE BEEN DESIGNED TO RESIST THE WINDLOADS CORRESPONDING TO THE REQUIRED DESIGN PRESSURE. THE 33-1/3% STRESS INCREASE HAS NOT BEEN USED IN THE DESIGN OF THIS PRODUCT. THE 1.6 LOAD DURATION FACTOR WAS USED FOR THE EVALUATION OF ANCHORS INTO WOOD. ANCHORS THAT COME INTO CONTACT WITH OTHER DISSIMILAR MATERIALS SHALL MEET THE REQUIREMENTS OF THE FLORIDA BUILDING CODE FOR CORROSION RESISTANCE.

9) METAL SUBSTRATE TO MEET MIN. STRENGTH AND THICKNESS REQUIREMENTS PER CURRENT FLORIDA BUILDING CODE AND TO BE REVIEWED BY THE AUTHORITY HAVING JURISDICTION .

10) REFERENCES: TEST REPORTS FTL-7897; ELCO ULTRACON NOA; ELCO CRETEFLEX NOA; ELCO AGGRE-GATOR NOA; ROYAL WINDOW AND DOOR PROFILES, LTD WHITE & BRONZE/LIGHTER SHADES OF CAP COATED PVC EXTRUSION NOA'S; NATIONAL DESIGN SPECIFICATION FOR WOOD CONSTRUCTION, ANSI/AF&PA NDS & ALUMINUM DESIGN MANUAL

GENERAL NOTES.....1
ELEVATIONS.....1
FRAME, GLASS & ANCHOR OPTIONS.....2
INSTALLATION, FLANGE & EQUAL LEG.....3
INSTALLATION, INTEGRAL FIN & J-CHANNEL.....4
GLAZING DETAILS.....5
DESIGN PRESSURES.....6-8
BOM & ASSEMBLY.....9

VISIBLE LIGHT FORMULAS
WIDTH: BUCK WIDTH - 4-3/16"
HEIGHT: BUCK HEIGHT - 4-3/16"

IMPACT RATING	DESIGN PRESSURE RATING
NOT RATED FOR IMPACT RESISTANCE	VARIES PER GLASS TYPE, SEE TABLES 4-9, SHEETS 6-8

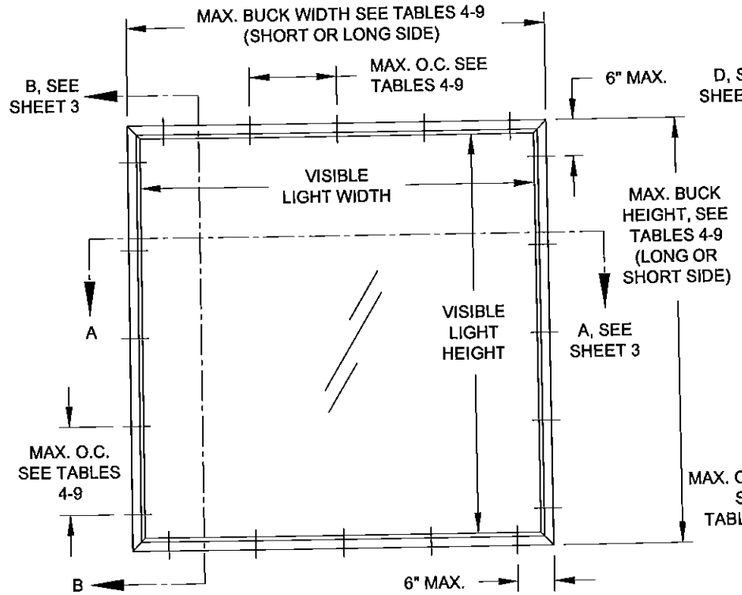

TYP. EQUAL-LEG/BOX & FLANGE FRAME (90° CORNERS)

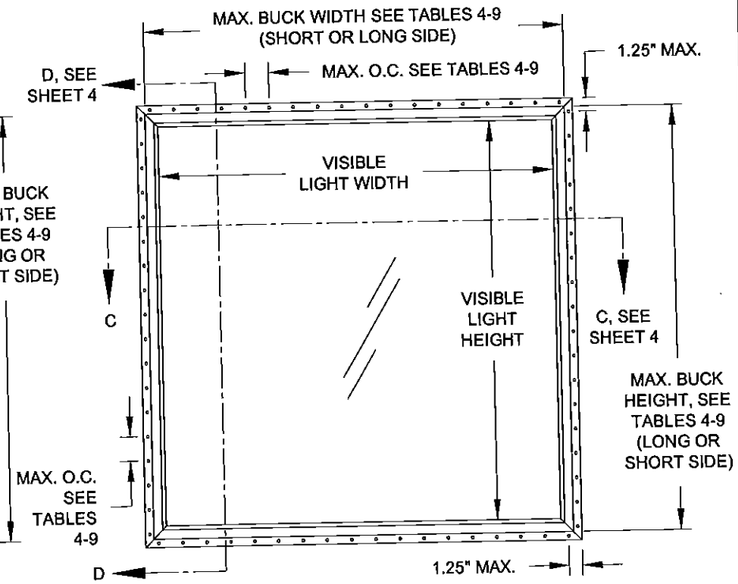

TYP. INTEGRAL FIN & J-CHANNEL FRAME (90° CORNERS) (ANCHORED THROUGH NAIL FIN)

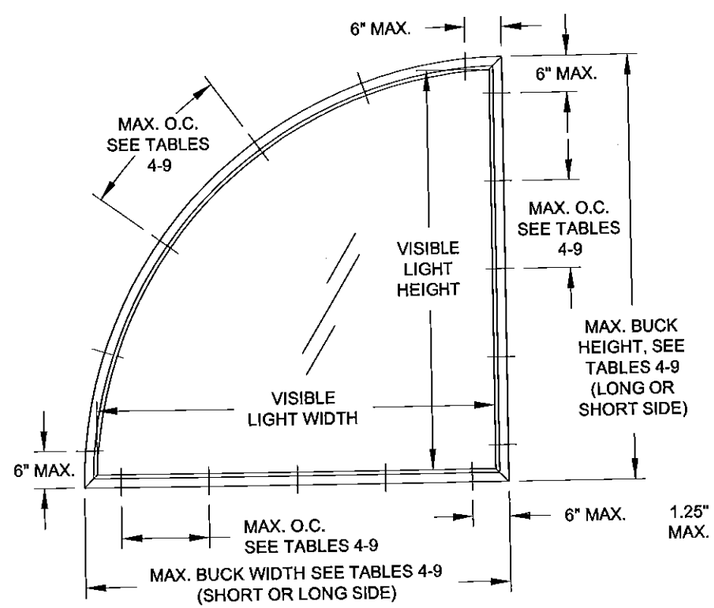

TYP. EQUAL-LEG/BOX & FLANGE FRAME (CURVED OR ANGLED CORNERS)

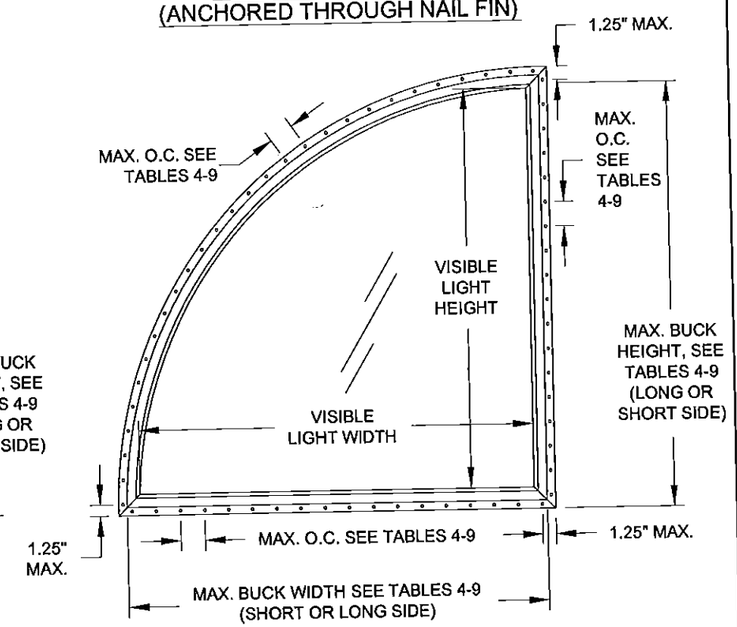

TYP. INTEGRAL FIN & J-CHANNEL FRAME (CURVED OR ANGLED CORNERS) (ANCHORED THROUGH NAIL FIN)

Approved as complying with the Florida Building Code
Date April 30 2015
NOA# 14-0930.24
Miami Dade Product Control
By Manuel Perez

Rev 1	
Rev 2	
Rev 3	

1070 TECHNOLOGY DRIVE
N. VENICE, FL 34275
P.O. BOX 1529
NOKOMIS, FL 34274
(941)-480-1600
CERT. OF AUTH. #29296

Title	VINYL FIXED WINDOW NOA (NI)	Date	9/9/14	Rev.	
Desc.	GENERAL NOTES & ELEVATION	Drawn By	J ROSOWSKI	DWG No.	MD-5420.0
Sheet	1 OF 9	Scale	NTS		
Series	PW-5420				

ANTHONY LYNN MILLER
LICENSE
No. 58705
4/23/15
STATE OF FLORIDA
PROFESSIONAL ENGINEER

A. LYNN MILLER, P.E.
P.E.# 58705

TABLE 1:

Glass Type	Description	Table #
1	7/8" I.G.: 1/8" A Exterior Cap + 5/8" Air Space + 1/8" A	4
2	7/8" I.G.: 1/8" T Exterior Cap + 5/8" Air Space + 1/8" T	5
3	7/8" I.G.: 3/16" A Exterior Cap + 1/2" Air Space + 3/16" A	6
4	7/8" I.G.: 3/16" T Exterior Cap + 1/2" Air Space + 3/16" T	7
5	1" I.G.: 1/4" A Exterior Cap + 1/2" Air Space + 1/4" A	8
6	1" I.G.: 1/4" T Exterior Cap + 1/2" Air Space + 1/4" T	9

"A" = ANNEALED
"T" = TEMPERED

TABLE 2: ANCHORS INSTALLED THROUGH FRAME

Group	Anchor	Substrate	Min. Edge Distance	Min. Embedment*
A	#10 SMS (steel, 18-8 S.S. or 410 S.S.)	P.T. Southern Pine (SG=0.55)	7/16"	1-3/8"
		Steel, A36*	3/8"	0.050"
		Steel Stud, A653 Gr. 33*	3/8"	0.0451" (18 Ga.)
		Aluminum, 6063-T5*	3/8"	0.050"
	3/16" steel Ultracon	P.T. Southern Pine (SG=0.55)	7/16"	1-3/8"
		Concrete (min. 2.85 ksi)	1"	1-3/8"
		Ungrouted CMU, (ASTM C-90)	2-1/2"	1-1/4"
B	#12 SMS (steel, 18-8 S.S. or 410 S.S.)	P.T. Southern Pine (SG=0.55)	9/16"	1-3/8"
		Steel, A36*	3/8"	0.050"
		Steel Stud, A653 Gr. 33*	3/8"	0.0451" (18 Ga.)
		Aluminum, 6063-T5*	3/8"	0.063"
C	1/4" steel Ultracon	Concrete (min. 2.85 ksi)	1"	1-3/4"
		Ungrouted CMU, (ASTM C-90)	2-1/2"	1-1/4"
	1/4" steel Creteflex	Concrete (min. 3.35 ksi)	1"	1-3/4"
D	1/4" steel Ultracon	P.T. Southern Pine (SG=0.55)	1"	1-3/8"
	1/4" steel Creteflex	Ungrouted CMU, (ASTM C-90)	2-1/2"	1-1/4"
		P.T. Southern Pine (SG=0.55)	1"	1-3/8"
	1/4" steel Aggre-Gator	P.T. Southern Pine (SG=0.55)	1"	1-3/8"
		Grouted CMU, (ASTM C-90)	2"	2"
	1/4" steel Ultracon	Concrete (min. 2.85 ksi)	2-1/2"	1-3/4"
	1/4" steel Creteflex	Concrete (min. 3.35 ksi)	2-1/2"	1-3/4"
	1/4" steel Aggre-Gator	Concrete (min. 3.275 ksi)	1-1/2"	1-3/8"

* MIN. OF 3 THREADS BEYOND THE METAL SUBSTRATE. FOR STEEL STUDS, MIN Fu=45 KSI.

"UNGROUTED CMU" VALUES MAY BE USED FOR GROUTED CMU APPLICATIONS.

TABLE 3: ANCHORS INSTALLED THROUGH INTEGRAL FIN

Group	Anchor	Substrate	Min. Edge Distance	Min. Embedment*
E	2-1/2" x .131" Common Nail	P.T. Southern Pine (SG=.55)	3/8"	2-7/16"
F	2-1/2" Ring-shank Roofing Nail	P.T. Southern Pine (SG=.55)	3/8"	2-7/16"
	#10 Trusshead SMS (steel, 18-8 S.S. or 410 S.S.)	P.T. Southern Pine (SG=.55)	1/2"	1-3/8"
		Aluminum, 6063-T5*	3/8"	0.050"
		Steel Stud, Gr. 33*	3/8"	0.0451" (18 Ga.)
		Steel, A36*	3/8"	0.050"
	#12 SMS (steel, 18-8 S.S. or 410 S.S.)	P.T. Southern Pine (SG=.55)	9/16"	1-3/8"
		Aluminum, 6063-T5*	3/8"	0.063"
		Steel Stud, Gr. 33*	3/8"	0.050"
		Steel, A36*	3/8"	0.050"

* MIN. OF 3 THREADS BEYOND THE METAL SUBSTRATE. FOR STEEL STUDS, MIN Fu=45 KSI.

WINDOW FRAMES MAY BE ANY OF THOSE SHOWN BELOW:

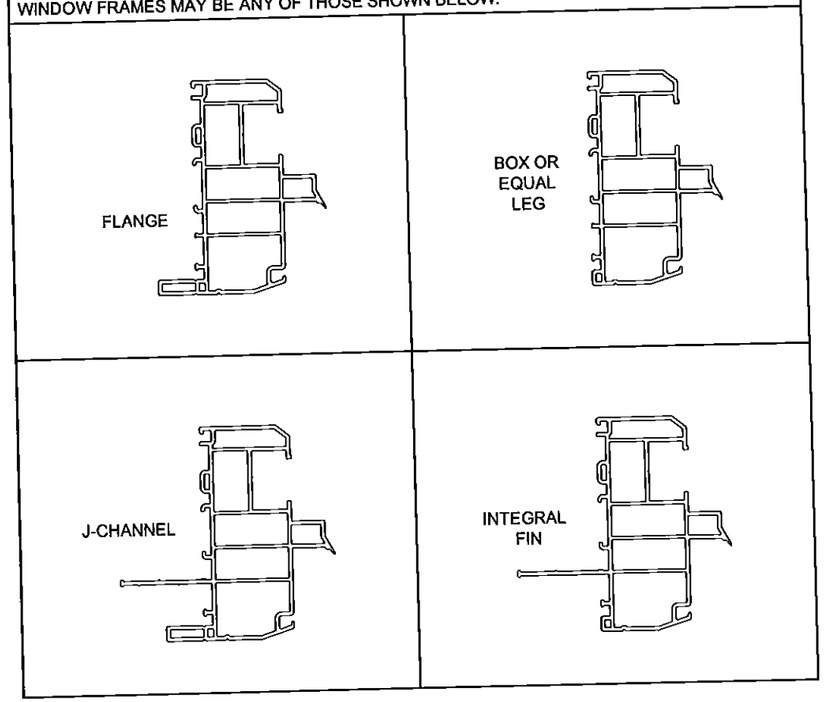

ALL ARCHITECTURAL WINDOW SHAPES QUALIFIED, COMMON EXAMPLES SHOWN. INSCRIBE THE SHAPE IN A BLOCK (SEE EXAMPLES BELOW), AND OBTAIN DESIGN PRESSURES FOR THAT BLOCK SIZE FROM DESIGN PRESSURE TABLES 4-9, SHEETS 6-8.

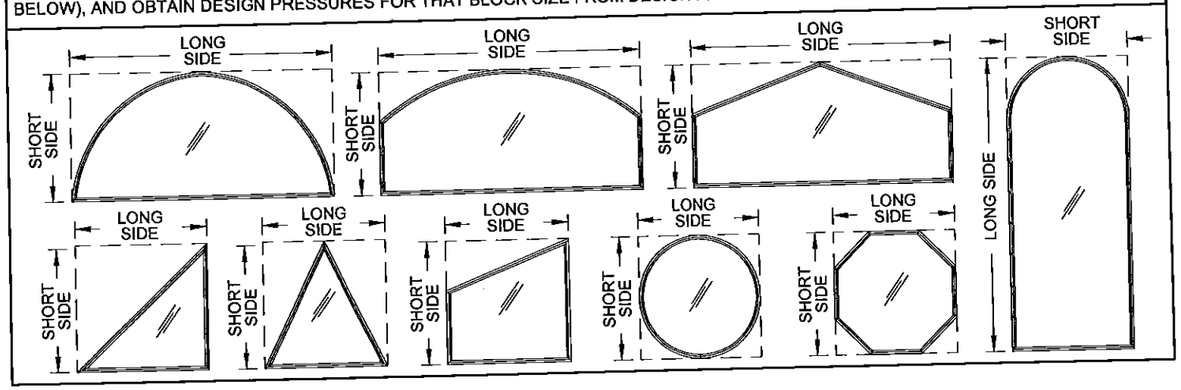

Approved as complying with the Florida Building Code
Date April 30, 2015
NOA# 14-0430.24
Miami Dade Product Control
By Manuel Perez

ANTHONY LYNN MILLER
LICENSE
No. 58705
STATE OF FLORIDA
PROFESSIONAL ENGINEER
4/23/15

A. LYNN MILLER, P.E.
P.E.# 58705

PGT®
CERT. OF AUTH. #29296
1070 TECHNOLOGY DRIVE
N. VENICE, FL 34275
(941)-480-1600

Title	VINYL FIXED WINDOW NOA (NI)	Date	9/9/14
Desc.	GLASS/ANCHORS/FRAME OPTIONS	Drawn By	J ROSOWSKI
Rev 1		Rev 1 Date	
Rev 2		Rev 2 Date	
Series	PW-5420	Scale	NTS
Sheet	2 OF 9	DWG No.	MD-5420.0
Rev. No.			

INSTALLATION DETAILS FOR FLANGE & EQUAL-LEG/BOX FRAMES

INSTALLATION OPTION 1

ANCHORED THROUGH FRAME INTO 2X WOOD FRAME OR BUCKSTRIP. SEE NOTE 2, THIS SHEET.

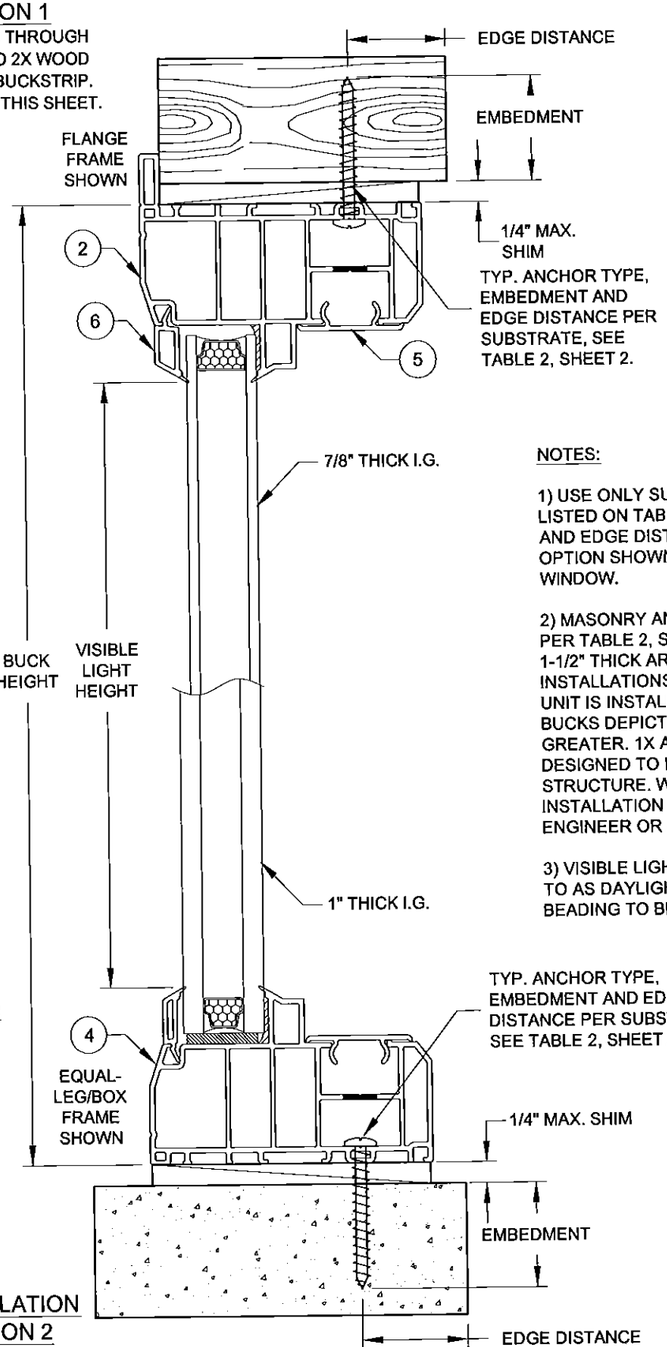

INSTALLATION OPTION 2

ANCHORED THROUGH FRAME DIRECTLY INTO CONCRETE/CMU.

VERTICAL SECTION B-B

INSTALLATION OPTION 2

ANCHORED THROUGH FRAME DIRECTLY INTO CONCRETE/CMU.

INSTALLATION OPTION 3

ANCHORED THROUGH FRAME AND 1X BUCKSTRIP INTO CONCRETE/CMU. SEE NOTE 2, THIS SHEET.

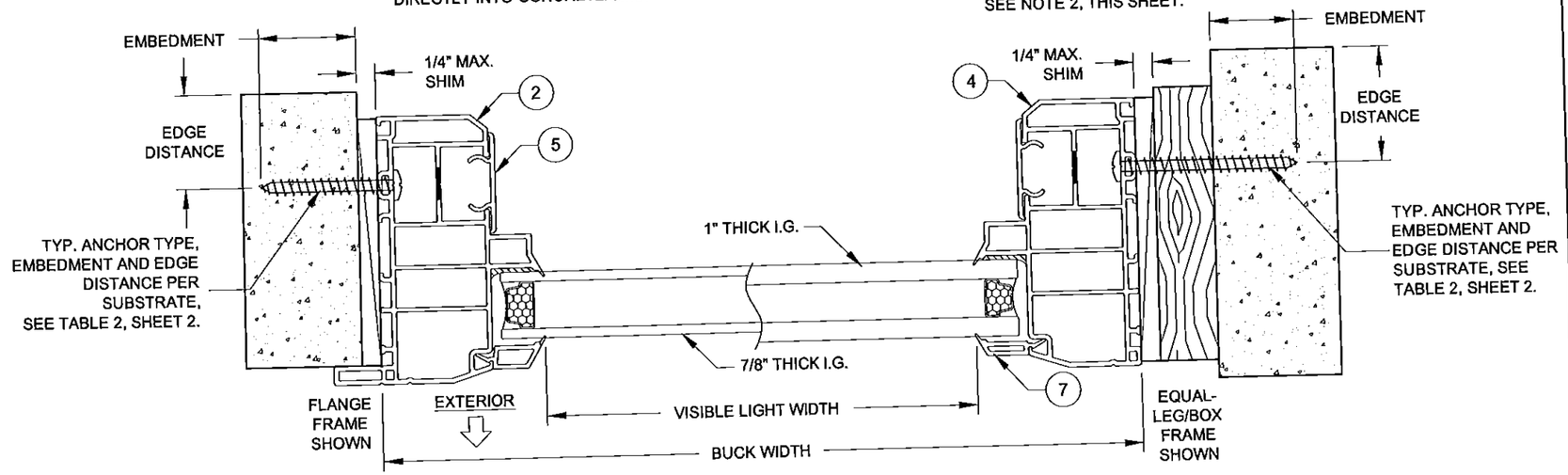

HORIZONTAL SECTION A-A

NOTES:

1) USE ONLY SUBSTRATE-APPROPRIATE ANCHORS LISTED ON TABLE 2, SHEET 2. FOLLOW EMBEDMENT AND EDGE DISTANCE LIMITS. ANY INSTALLATION OPTION SHOWN MAY BE USED ON ANY SIDE OF THE WINDOW.

2) MASONRY ANCHORS MAY BE USED INTO WOOD AS PER TABLE 2, SHEET 2. ALL WOOD BUCKS LESS THAN 1-1/2" THICK ARE TO BE CONSIDERED 1X INSTALLATIONS. 1X WOOD BUCKS ARE OPTIONAL IF UNIT IS INSTALLED DIRECTLY TO SUBSTRATE. WOOD BUCKS DEPICTED AS 2X ARE 1-1/2" THICK OR GREATER. 1X AND 2X BUCKS (WHEN USED) SHALL BE DESIGNED TO PROPERLY TRANSFER LOADS TO THE STRUCTURE. WOOD BUCK DESIGN AND INSTALLATION IS THE RESPONSIBILITY OF THE ENGINEER OR ARCHITECT OF RECORD.

3) VISIBLE LIGHT WIDTH OR HEIGHT (ALSO REFERRED TO AS DAYLIGHT OPENING) IS MEASURED FROM BEADING TO BEADING.

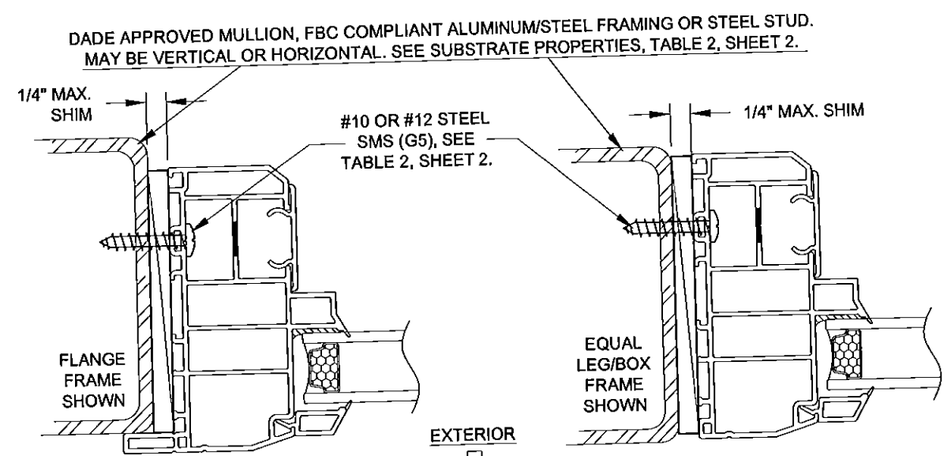

INSTALLATION OPTION 4

ANCHORED THROUGH FRAME INTO METAL

INSTALLATION OPTION 4

ANCHORED THROUGH FRAME INTO METAL

VISIBLE LIGHT FORMULAS

WIDTH: BUCK WIDTH - 4-3/16"
HEIGHT: BUCK HEIGHT - 4-3/16"

Approved as complying with the Florida Building Code
Date April 30, 2015
NOA# 14-0430.24
Miami Dade Product Control
By Manuel Perez

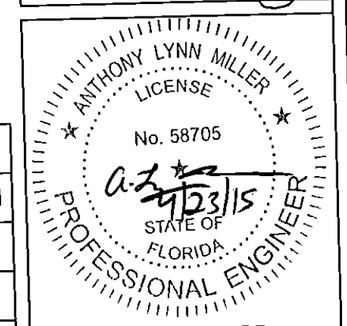

A. LYNN MILLER, P.E.
P.E.# 58705

PGT®
CERT. OF AUTH. #29296
1070 TECHNOLOGY DRIVE
N. VENICE, FL 34275
(941)-480-1600

Title	VINYL FIXED WINDOW NOA (NI)	Date	9/9/14
Desc.	FLANGE & EQUAL-LEG/BOX FRAMES	Drawn By	J ROSOWSKI
Rev 1		Rev 1 Date	
Rev 2		Rev 2 Date	
Series	PW-5420	Scale	NTS
Sheet	3 OF 9	DWG No.	MD-5420.0
Rev. No			

INSTALLATION DETAILS FOR INTEGRAL FIN & J-CHANNEL FRAMES

INSTALLATION OPTION 5

ANCHORED THROUGH INTEGRAL FIN INTO 2X WOOD FRAME OR BUCKSTRIP. SEE NOTE 2, THIS SHEET.

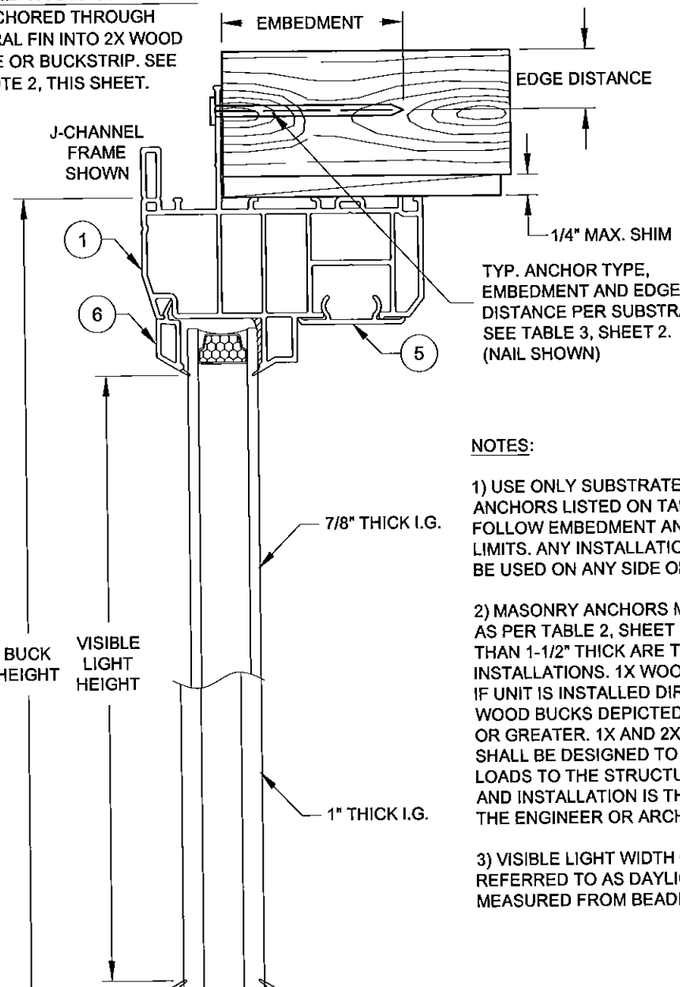

NOTES:

1) USE ONLY SUBSTRATE-APPROPRIATE ANCHORS LISTED ON TABLES 2 & 3, SHEET 2. FOLLOW EMBEDMENT AND EDGE DISTANCE LIMITS. ANY INSTALLATION OPTION SHOWN MAY BE USED ON ANY SIDE OF THE WINDOW.

2) MASONRY ANCHORS MAY BE USED INTO WOOD AS PER TABLE 2, SHEET 2. ALL WOOD BUCKS LESS THAN 1-1/2" THICK ARE TO BE CONSIDERED 1X INSTALLATIONS. 1X WOOD BUCKS ARE OPTIONAL IF UNIT IS INSTALLED DIRECTLY TO SUBSTRATE. WOOD BUCKS DEPICTED AS 2X ARE 1-1/2" THICK OR GREATER. 1X AND 2X BUCKS (WHEN USED) SHALL BE DESIGNED TO PROPERLY TRANSFER LOADS TO THE STRUCTURE. WOOD BUCK DESIGN AND INSTALLATION IS THE RESPONSIBILITY OF THE ENGINEER OR ARCHITECT OF RECORD.

3) VISIBLE LIGHT WIDTH OR HEIGHT (ALSO REFERRED TO AS DAYLIGHT OPENING) IS MEASURED FROM BEADING TO BEADING.

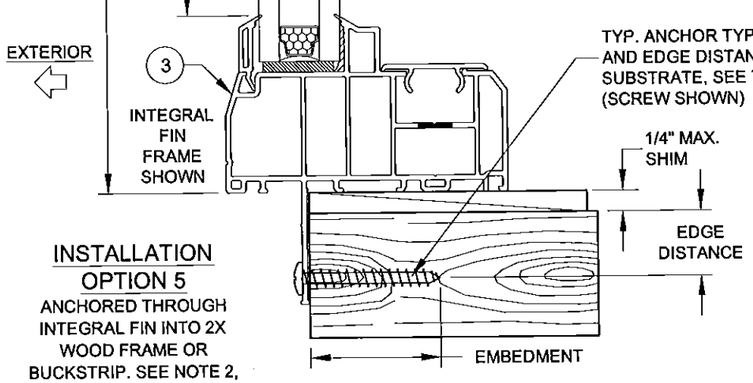

INSTALLATION OPTION 5

ANCHORED THROUGH INTEGRAL FIN INTO 2X WOOD FRAME OR BUCKSTRIP. SEE NOTE 2, THIS SHEET.

VERTICAL SECTION D-D

INSTALLATION OPTION 6

ANCHORED THROUGH FRAME INTO 2X WOOD FRAME OR BUCKSTRIP. SEE NOTE 2, THIS SHEET.

INSTALLATION OPTION 5

ANCHORED THROUGH INTEGRAL FIN INTO 2X WOOD FRAME OR BUCKSTRIP. SEE NOTE 2, THIS SHEET.

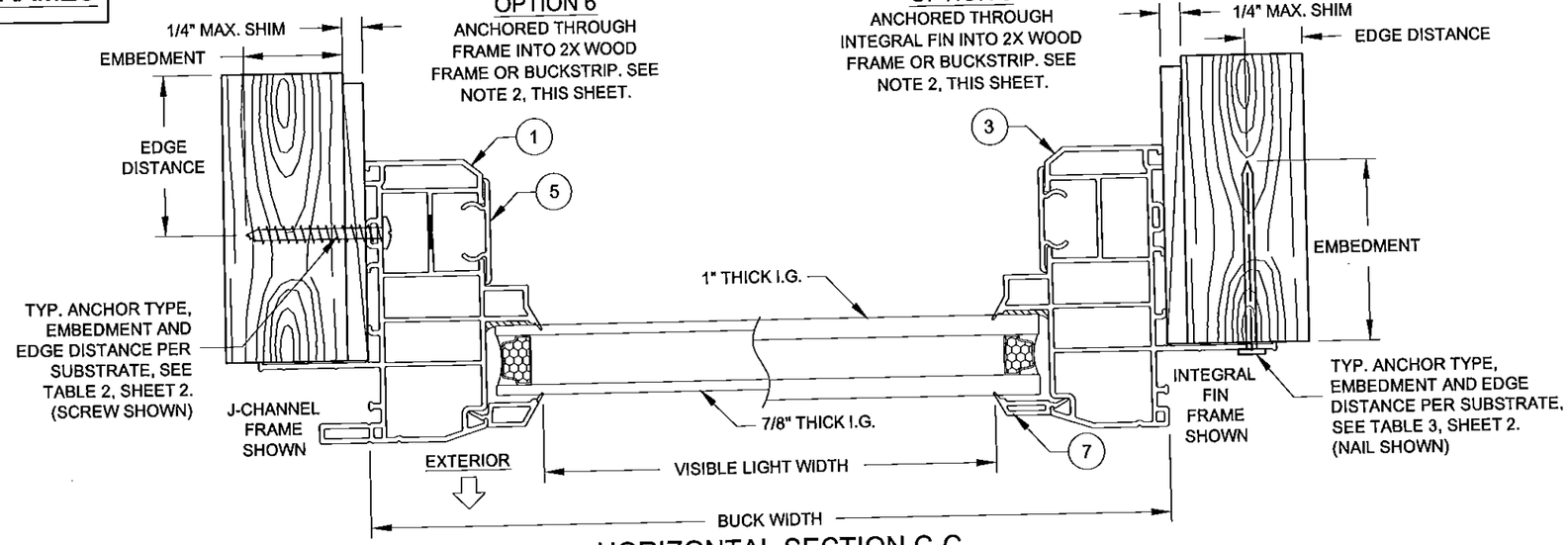

HORIZONTAL SECTION C-C

DADE APPROVED MULLION, FBC COMPLIANT ALUMINUM/STEEL FRAMING OR STEEL STUD. MAY BE VERTICAL OR HORIZONTAL. SEE SUBSTRATE PROPERTIES, TABLES 2 & 3, SHEET 2.

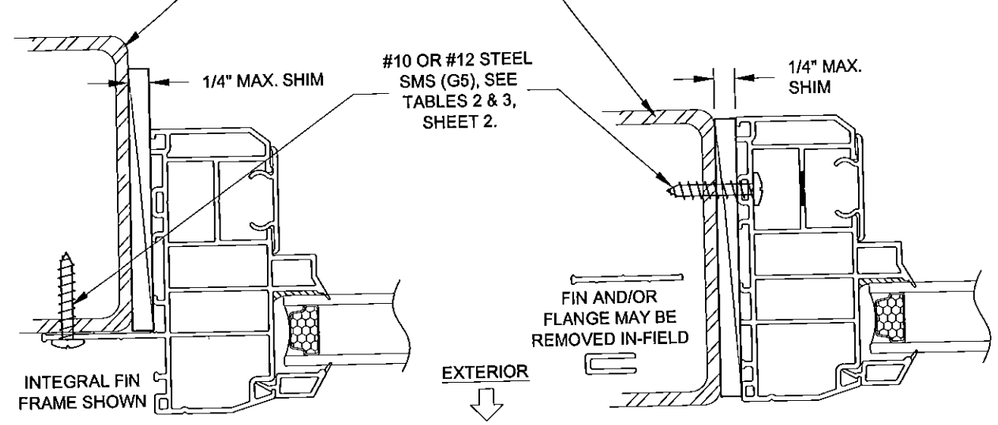

INSTALLATION OPTION 7

INSTALLATION THROUGH THE INTEGRAL FIN, INTO METAL, SEE TABLE 3, SHEET 2.

INSTALLATION OPTION 8

INSTALLATION THROUGH THE FRAME, INTO METAL, SEE TABLE 2, SHEET 2.

VISIBLE LIGHT FORMULAS

WIDTH: BUCK WIDTH - 4-3/16"
HEIGHT: BUCK HEIGHT - 4-3/16"

Approved as complying with the Florida Building Code
Date Apr. 30, 2015
NOA# 14-0430.34
Miami Dade Product Control
By Manuel Cruz

ANTHONY LYNN MILLER
LICENSE
No. 58705
STATE OF FLORIDA
PROFESSIONAL ENGINEER
4/23/15
A. LYNN MILLER, P.E.
P.E.# 58705

PGT®
CERT. OF AUTH. #29296
1070 TECHNOLOGY DRIVE
N. VENICE, FL 34275
(941)-480-1600

Title	VINYL FIXED WINDOW NOA (NI)			Date	9/9/14
Desc.	J-CHANNEL & INTEGRAL FIN FRAMES			Drawn By	J ROSOWSKI
Rev 1				Rev 1 Date	
Rev 2				Rev 2 Date	
Series	PW-5420	Scale NTS	Sheet 4 OF 9	DWG No. MD-5420.0	Rev. No.

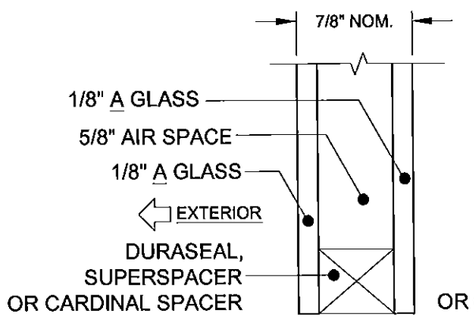

GLASS TYPE 1

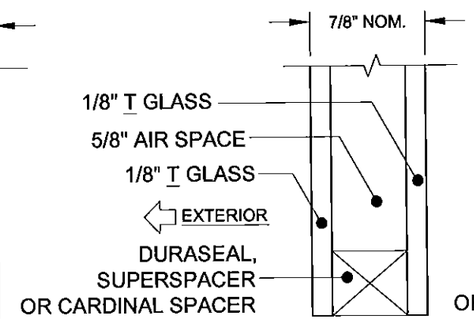

GLASS TYPE 2

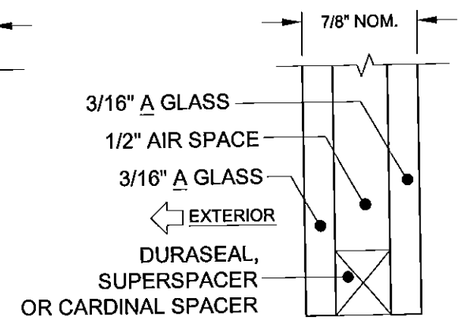

GLASS TYPE 3

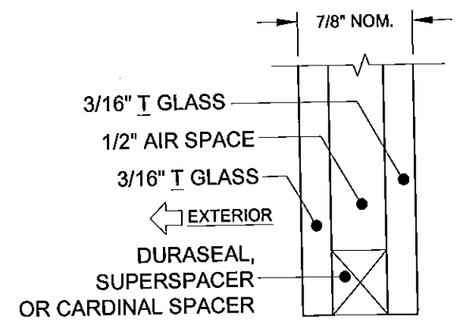

GLASS TYPE 4

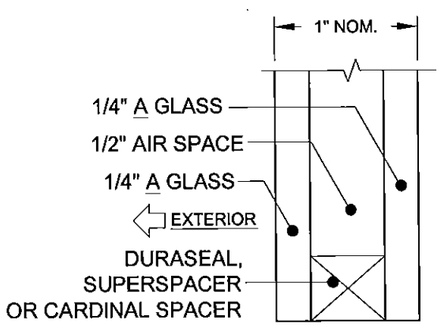

GLASS TYPE 5

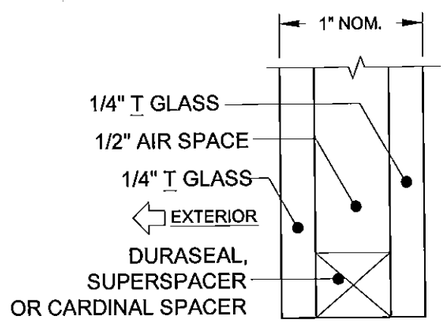

GLASS TYPE 6

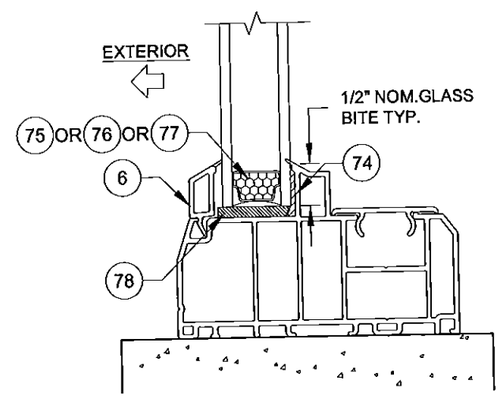

TYP. GLAZING DETAIL

GLAZING NOTES:
"A" = ANNEALED
"T" = TEMPERED

Approved as complying with the Florida Building Code
Date April 30, 2015
NOA# 14-0930.04
Miami Dade Product Control
By Manuel Perez

Rev 1	Rev 2	Rev 3

1070 TECHNOLOGY DRIVE
N. VENICE, FL 34275
P.O. BOX 1529
NOKOMIS, FL 34274
(941)-480-1600
PGT®
CERT. OF AUTH. #29296

Series	Sheet	Rev.
PW-5420	5 OF 9	MD-5420.0

Scale	DWG No.	
NTS		

Desc.	Drawn By	Date
GLAZING DETAILS	J ROSOWSKI	9/9/14

Title: VINYL FIXED WINDOW NOA (NI)

ANTHONY LYNN MILLER
LICENSE
No. 58705
9/23/15
STATE OF FLORIDA
PROFESSIONAL ENGINEER

A. LYNN MILLER, P.E.
P.E.# 58705

TABLE 4:

Window Design Pressure, (+/- psf)

1/8" A Cap - Airspace - 1/8" A

Use this table for Glass Type: **1**

Short Side (in) \ Long Side (in)	51.05	54	56	58	62	64	68	72	76	80	84	87
18	+80/-93.7	+80/-92.6	+80/-91.9	+80/-91.3	+80/-90.3	+80/-89.8	+80/-88.9	+80/-88.2	+80/-87.5	+80/-86.9	+80/-86.4	+80/-86.1
20	+80/-86.4	+80/-85.2	+80/-84.5	+80/-83.5	+80/-80.6	+/-79.4	+/-77	+/-75.2	+/-74	+/-73.1	+/-72.2	+/-71.5
22	+80/-80.3	+/-75.2	+/-73.3	+/-71.5	+/-68.4	+/-67	+/-64.4	+/-62.5	+/-60.7	+/-59.2	+/-58	+/-57.1
24	+/-75.6	+/-71.3	+/-68.2	+/-65.7	+/-60.7	+/-58.5	+/-55.3	+/-53.1	+/-51.1	+/-49.7	+/-48.2	+/-47.3
26	+/-71.7	+/-70.2	+/-67	+/-63.5	+/-56.7	+/-54.7	+/-50.9	+/-47.7	+/-45.5	+/-43.7	+/-42.3	+/-41.2
28	+/-68.3	+/-67	+/-66.1	+/-63.5	+/-56.3	+/-54	+/-49.5	+/-45.5	+/-42.8	+/-40.3	+/-38	+/-37.1
30	+/-65.6	+/-64.1	+/-63.2	+/-62.4	+/-56.9	+/-54.4	+/-49.7	+/-45.4	+/-42.1	+/-38.9	+/-36.4	
32	+/-63.2	+/-61.7	+/-60.8	+/-59.9	+/-57.8	+/-54.9	+/-50.2	+/-45.9	+/-42.5	+/-38.9		
34	+/-61.2	+/-59.6	+/-58.6	+/-57.8	+/-56.3	+/-55.1	+/-50.8	+/-46.4	+/-43.2			
36	+/-59.6	+/-57.9	+/-56.8	+/-55.9	+/-54.4	+/-53.7	+/-50.8	+/-46.6				
38	+/-58.2	+/-56.4	+/-55.3	+/-54.3	+/-52.7	+/-52	+/-49.5					
40	+/-57.1	+/-55.1	+/-54	+/-53	+/-51.3	+/-50.5						
42	+/-56.2	+/-54.1	+/-52.9	+/-51.8	+/-50							
44	+/-55.5	+/-53.3	+/-52	+/-50.8								
46	+/-54.9	+/-52.6	+/-51.1									
48	+/-53.5	+/-50.8										
51.05	+/-50.6											

MAX. O.C. SPACING IF ANCHORING THROUGH THE FRAME PER SHEETS 3 & 4	MAX. O.C. SPACING IF ANCHORING THROUGH THE INTEGRAL FIN PER SHEET 4
APPLIES TO A, B, C OR D ANCHORS (SEE TABLE 2)	APPLIES TO E OR F ANCHORS (SEE TABLE 3)
15"	4"

TABLE DIMENSIONS MAY BE ORIENTED VERTICALLY OR HORIZONTALLY AS SHOWN.

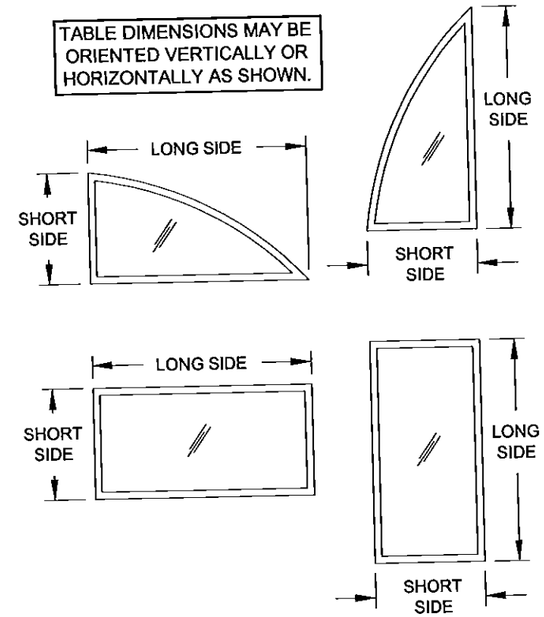

TABLE 5:

Window Design Pressure, (+/- psf)

1/8" T Cap - Airspace - 1/8" T

Use this table for Glass Type: **2**

Short Side (in) \ Long Side (in)	60.926	64	66	68	70	74	77	80	84	87	92	97	99
32	+80/-98.2	+80/-96.6	+80/-95.6	+80/-94.7	+80/-93.9	+80/-92.4	+80/-91.4	+80/-90.5	+80/-89.5	+80/-88.7	+80/-87.7	+80/-86.7	+80/-86.4
34	+80/-94.5	+80/-92.8	+80/-91.8	+80/-90.9	+80/-90	+80/-88.5	+80/-87.5	+80/-86.6	+80/-85.5	+80/-84.7	+80/-83.6	+80/-82.6	+80/-82.3
36	+80/-91.4	+80/-89.6	+80/-88.5	+80/-87.6	+80/-86.7	+80/-85.1	+80/-84	+80/-83.1	+80/-81.9	+80/-81.2	+/-80	+/-79	+/-78.7
38	+80/-88.6	+80/-86.7	+80/-85.6	+80/-84.6	+80/-83.7	+80/-82.1	+80/-81	+/-80	+/-78.8	+/-78	+/-76.9	+/-75.8	
40	+80/-86.3	+80/-84.3	+80/-83.1	+80/-82.1	+80/-81.1	+/-79.4	+/-78.3	+/-77.3	+/-76	+/-75.2	+/-74		
42	+80/-84.2	+80/-82.1	+80/-80.9	+/-79.8	+/-78.8	+/-77	+/-75.9	+/-74.8	+/-73.6	+/-72.7			
44	+80/-82.4	+80/-80.3	+/-79	+/-77.9	+/-76.8	+/-75	+/-73.7	+/-72.7	+/-71.4				
46	+80/-80.9	+/-78.6	+/-77.3	+/-76.1	+/-75	+/-73.1	+/-71.8	+/-70.7					
48	+/-79.7	+/-77.3	+/-75.9	+/-74.6	+/-73.5	+/-71.5	+/-70.1						
50	+/-78.6	+/-76.1	+/-74.6	+/-73.3	+/-72.1	+/-70							
52	+/-77.7	+/-75.1	+/-73.5	+/-72.2	+/-70.9								
54	+/-77.1	+/-74.2	+/-72.6	+/-71.2									
56	+/-76.6	+/-73.6	+/-71.9										
58	+/-76.3	+/-73.1											
60.926	+/-76.1												

MAX. O.C. SPACING IF ANCHORING THROUGH THE FRAME PER SHEETS 3 & 4	MAX. O.C. SPACING IF ANCHORING THROUGH THE INTEGRAL FIN PER SHEET 4
APPLIES TO B, C OR D ANCHORS (SEE TABLE 2)	APPLIES TO F ANCHORS (SEE TABLE 3)
15.5"	4"

NOTES:

1) BUCK DIMENSIONS SHOWN.

2) FOR SIZES NOT SHOWN, ROUND UP TO THE NEXT AVAILABLE SHORT OR LONG DIMENSION.

3) FOR ARCHITECTURAL WINDOWS (SEE SHEET 2), FIND THE SMALLEST SQUARE WINDOW SIZE IN THE TABLE(S) ABOVE WHICH THE ARCHITECTURAL WINDOW WILL COMPLETELY FIT WITHIN.

Approved as complying with the Florida Buiding Code
Date April 30, 2015
NOA# 14-0930.24
Miami Dade Product Control
By Manuel Perez

Rev.	Date
Rev 1	
Rev 2	
Rev 3	

1070 TECHNOLOGY DRIVE
N. VENICE, FL 34275
P.O. BOX 1529
NOKOMIS, FL 34274
(941)-480-1600

PGT® CERT. OF AUTH. #29296

Series	Desc.	Sheet	Scale	DWG No.	Drawn By	Date	Rev.
VINYL FIXED WINDOW NOA (NI)	DESIGN PRESSURE TABLES A	6 OF 9	NTS	PW-5420	J ROSOWSKI	9/9/14	MD-5420.0

ANTHONY LYNN MILLER
LICENSE
No. 58705
4/23/15
STATE OF FLORIDA
PROFESSIONAL ENGINEER

A. LYNN MILLER, P.E.
P.E.# 58705

TABLE 6:

Window Design Pressure, (+/- psf)

3/16" A Cap - Airspace - 3/16" A

Use this table for Glass Type: **3**

Short Side (in) \ Long Side (in)	69.65	71	73	75	78	80	85	86	89	92	96	99
32	+/-76.9	+/-76.4	+/-74.3	+/-72.5	+/-70.6	+/-69.3	+/-66.2	+/-65.7	+/-64.1	+/-62.6	+/-60.8	+/-59.8
34	+/-73.7	+/-73.3	+/-71.3	+/-69.7	+/-66.8	+/-65	+/-61	+/-60.3	+/-58.1	+/-56.3	+/-54.7	+/-53.8
36	+/-71	+/-70.5	+/-69.8	+/-67.9	+/-64.4	+/-62.5	+/-57.2	+/-56.3	+/-54.7	+/-52.9	+/-50.9	+/-49.7
38	+/-68.6	+/-68.1	+/-67.4	+/-66.8	+/-63.5	+/-61	+/-55.6	+/-54.9	+/-52.7	+/-50.6	+/-48.2	+/-46.4
40	+/-66.4	+/-65.9	+/-65.2	+/-64.6	+/-63.2	+/-60.7	+/-55.1	+/-54.2	+/-52	+/-49.7	+/-46.4	+/-45.2
42	+/-64.6	+/-64	+/-63.3	+/-62.6	+/-61.7	+/-60.5	+/-55.1	+/-54.2	+/-51.7	+/-49.1	+/-46.3	+/-44.5
44	+/-62.9	+/-62.4	+/-61.6	+/-60.9	+/-60	+/-59.4	+/-55.1	+/-54.2	+/-51.8	+/-49.1	+/-46.1	+/-44.5
46	+/-61.5	+/-60.9	+/-60.1	+/-59.4	+/-58.4	+/-57.8	+/-55.1	+/-54.2	+/-51.8	+/-49.3	+/-46.3	+/-44.5
48	+/-60.2	+/-59.6	+/-58.8	+/-58	+/-57	+/-56.4	+/-55	+/-54.2	+/-51.8	+/-49.5	+/-46.4	+/-44.6
50	+/-59.1	+/-58.5	+/-57.6	+/-56.8	+/-55.8	+/-55.1	+/-53.7	+/-53.4	+/-51.8	+/-49.5	+/-46.6	
52	+/-58.1	+/-57.5	+/-56.6	+/-55.8	+/-54.6	+/-54	+/-52.5	+/-52.2	+/-51.5	+/-49.3		
54	+/-57.3	+/-56.6	+/-55.7	+/-54.8	+/-53.7	+/-53	+/-51.4	+/-51.1	+/-50.4			
56	+/-56.6	+/-55.9	+/-54.9	+/-54	+/-52.8	+/-52	+/-50.4	+/-50.2				
57	+/-56.3	+/-55.5	+/-54.5	+/-53.6	+/-52.4	+/-51.6	+/-50					
60	+/-55.5	+/-54.7	+/-53.6	+/-52.6	+/-51.3	+/-50.5						
62	+/-55.1	+/-54.2	+/-53.1	+/-52.1	+/-50.7							
64	+/-54.8	+/-53.9	+/-52.7	+/-51.6								
66	+/-54.5	+/-53.6	+/-52.4									
68	+/-53.6	+/-53.1										
69.65	+/-52.6											

MAX. O.C. SPACING IF ANCHORING THROUGH THE FRAME PER SHEETS 3 & 4	MAX. O.C. SPACING IF ANCHORING THROUGH THE INTEGRAL FIN PER SHEET 4
APPLIES TO A, B, C OR D ANCHORS (SEE TABLE 2)	APPLIES TO E OR F ANCHORS (SEE TABLE 3)
15"	3" FOR E ANCHORS, 4" FOR F ANCHORS

TABLE DIMENSIONS MAY BE ORIENTED VERTICALLY OR HORIZONTALLY AS SHOWN.

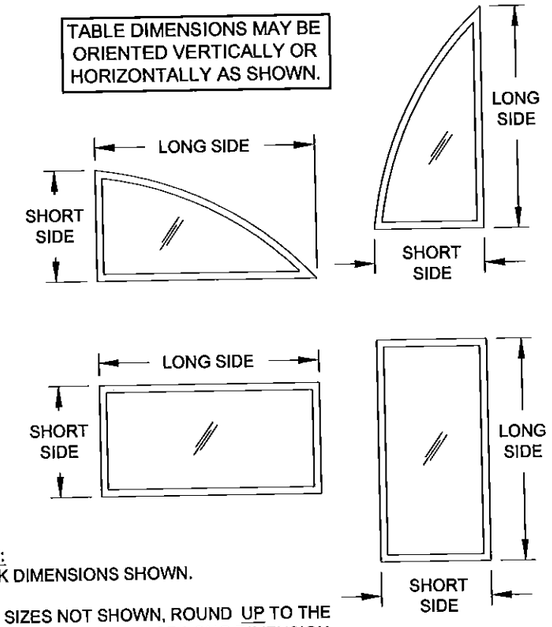

NOTES:
1) BUCK DIMENSIONS SHOWN.

2) FOR SIZES NOT SHOWN, ROUND UP TO THE NEXT AVAILABLE SHORT OR LONG DIMENSION.

3) FOR ARCHITECTURAL WINDOWS (SEE SHEET 2), FIND THE SMALLEST SQUARE WINDOW SIZE IN THE TABLE(S) ABOVE WHICH THE ARCHITECTURAL WINDOW WILL COMPLETELY FIT WITHIN.

TABLE 7:

Window Design Pressure, (+/- psf)

3/16" T Cap - Airspace - 3/16" T

Use this table for Glass Type: **4**

Short Side (in) \ Long Side (in)	81.52	83	85	87	89	92	94	97	99	103	107	110	113	118	122	126	132	138	144
46	+80/-94	+80/-93.3	+80/-92.5	+80/-91.7	+80/-91	+80/-89.9	+80/-89.3	+80/-88.4	+80/-87.9	+80/-86.8	+80/-85.9	+80/-85.3	+80/-84.7	+80/-83.8	+80/-83.1	+80/-82.5	+80/-81.7	+80/-80.9	+80/-80.3
48	+80/-91.6	+80/-90.9	+80/-90.1	+80/-89.3	+80/-88.5	+80/-87.5	+80/-86.8	+80/-85.9	+80/-85.3	+80/-84.3	+80/-83.3	+80/-82.7	+80/-82.1	+80/-81.2	+80/-80.5	+/-79.9	+/-79	+/-78.3	
50	+80/-89.5	+80/-88.8	+80/-87.9	+80/-87.1	+80/-86.3	+80/-85.2	+80/-84.5	+80/-83.6	+80/-83	+80/-82	+80/-81	+80/-80.3	+/-79.7	+/-78.7	+/-78.1	+/-77.4	+/-76.6		
52	+80/-87.6	+80/-86.9	+80/-86	+80/-85.1	+80/-84.3	+80/-83.2	+80/-82.5	+80/-81.5	+80/-80.9	+/-79.8	+/-78.8	+/-78.1	+/-77.5	+/-76.5	+/-75.8	+/-75.2			
54	+80/-85.9	+80/-85.2	+80/-84.2	+80/-83.3	+80/-82.5	+80/-81.3	+80/-80.6	+/-79.6	+/-79	+/-77.9	+/-76.9	+/-76.2	+/-75.5	+/-74.5	+/-73.8				
56	+80/-84.4	+80/-83.6	+80/-82.6	+80/-81.7	+80/-80.8	+/-79.7	+/-78.9	+/-77.9	+/-77.3	+/-76.1	+/-75	+/-74.3	+/-73.7	+/-72.6					
58	+80/-83	+80/-82.2	+80/-81.2	+80/-80.2	+/-79.4	+/-78.1	+/-77.4	+/-76.3	+/-75.7	+/-74.5	+/-73.4	+/-72.7	+/-72						
60	+80/-81.8	+80/-81	+/-79.9	+/-78.9	+/-78	+/-76.7	+/-76	+/-74.9	+/-74.2	+/-73	+/-71.9	+/-71.1							
62	+80/-80.8	+/-79.9	+/-78.8	+/-77.8	+/-76.8	+/-75.5	+/-74.7	+/-73.6	+/-72.9	+/-71.6	+/-70.5								
64	+/-79.8	+/-78.9	+/-77.8	+/-76.7	+/-75.7	+/-74.3	+/-73.5	+/-72.4	+/-71.6	+/-70.3									
67	+/-78.6	+/-77.7	+/-76.4	+/-75.3	+/-74.3	+/-72.8	+/-72	+/-70.7	+/-70										
68	+/-78.3	+/-77.3	+/-76.1	+/-74.9	+/-73.8	+/-72.4	+/-71.5	+/-70.3											
70	+/-77.7	+/-76.7	+/-75.4	+/-74.2	+/-73.1	+/-71.5	+/-70.6												
72	+/-77.2	+/-76.1	+/-74.8	+/-73.5	+/-72.4	+/-70.8													
74	+/-76.8	+/-75.7	+/-74.3	+/-73	+/-71.8														
76	+/-76.5	+/-75.3	+/-73.8	+/-72.5															
78	+/-76.3	+/-75	+/-73.5																
80	+/-76.2	+/-74.9																	
81.52	+/-76.1																		

MAX. O.C. SPACING IF ANCHORING THROUGH THE FRAME PER SHEETS 3 & 4	MAX. O.C. SPACING IF ANCHORING THROUGH THE INTEGRAL FIN PER SHEET 4
APPLIES TO B, C OR D ANCHORS (SEE TABLE 2)	APPLIES TO F ANCHORS (SEE TABLE 3)
15.5"	3.3"

Approved as complying with the Florida Building Code
Date APRIL 30, 2015
NOA# 14-0930.24
Miami Dade Product Control
By Manuel Perez

Rev.	Date	By
Rev. 1		
Rev. 2		
Rev. 3		

1070 TECHNOLOGY DRIVE
N. VENICE, FL 34275
P.O. BOX 1529
NOKOMIS, FL 34274
(941)-480-1600
CERT. OF AUTH. #29296

Title	Desc.	Series	Scale	Sheet	DWG No.	Rev.
VINYL FIXED WINDOW NOA (NI)	DESIGN PRESSURE TABLES B	PW-5420	NTS	7 OF 9	MD-5420.0	

Drawn By: J ROSOWSKI
Date: 9/9/14

ANTHONY LYNN MILLER
LICENSE
No. 58705
STATE OF FLORIDA
PROFESSIONAL ENGINEER
9/23/15
A. LYNN MILLER, P.E.
P.E.# 58705

TABLE 8:

Window Design Pressure, (+/- psf)

1/4" A Cap - Airspace - 1/4" A

Use this table for Glass Type: **5**

Short Side (in) \ Long Side (in)	81.52	83	85	87	89	92	94	97	99	103	107	110	111
46	+/-67.1	+/-66.7	+/-66.1	+/-65.3	+/-63.2	+/-60.1	+/-58	+/-55.1	+/-53.6	+/-51.3	+/-48.8	+/-46.8	+/-46.4
48	+/-65.4	+/-65	+/-64.3	+/-63.8	+/-62.8	+/-59.8	+/-57.6	+/-54.9	+/-53.5	+/-50.6	+/-47.9	+/-46.3	+/-45.7
50	+/-63.9	+/-63.4	+/-62.8	+/-62.2	+/-61.6	+/-59.4	+/-57.2	+/-54.9	+/-53.5	+/-50.6	+/-47.3	+/-45.9	+/-45.4
52	+/-62.6	+/-62.1	+/-61.4	+/-60.8	+/-60.2	+/-59.2	+/-57.1	+/-54.7	+/-53.5	+/-50.6	+/-47.5	+/-45.7	+/-45.4
54	+/-61.4	+/-60.8	+/-60.2	+/-59.5	+/-58.9	+/-58.1	+/-56.9	+/-54.7	+/-53.3	+/-50.6	+/-47.5	+/-45.9	+/-45.4
56	+/-60.3	+/-59.7	+/-59	+/-58.4	+/-57.7	+/-56.9	+/-56.4	+/-54.5	+/-53.3	+/-50.4	+/-47.5	+/-45.9	+/-45.5
58	+/-59.3	+/-58.7	+/-58	+/-57.3	+/-56.7	+/-55.8	+/-55.3	+/-54.4	+/-53.1	+/-50.4	+/-47.7	+/-45.9	+/-45.5
60	+/-58.5	+/-57.8	+/-57.1	+/-56.4	+/-55.7	+/-54.8	+/-54.3	+/-53.5	+/-52.7	+/-50.4	+/-47.7	+/-45.9	
62	+/-57.7	+/-57.1	+/-56.3	+/-55.5	+/-54.9	+/-53.9	+/-53.3	+/-52.5	+/-52	+/-49.9	+/-47.7		
64	+/-57	+/-56.4	+/-55.5	+/-54.8	+/-54.1	+/-53.1	+/-52.5	+/-51.7	+/-51.2	+/-49.3			
67	+/-56.2	+/-55.5	+/-54.6	+/-53.8	+/-53	+/-52	+/-51.4	+/-50.5	+/-50				
68	+/-55.9	+/-55.2	+/-54.3	+/-53.5	+/-52.7	+/-51.7	+/-51.1	+/-50.2					
70	+/-55.5	+/-54.8	+/-53.8	+/-53	+/-52.2	+/-51.1	+/-50.4						
72	+/-55.1	+/-54.4	+/-53.4	+/-52.5	+/-51.7	+/-50.6							
74	+/-54.8	+/-54	+/-53	+/-52.1	+/-51.3								
76	+/-54.6	+/-53.8	+/-52.7	+/-51.8									
78	+/-53.6	+/-52.9	+/-51.8										
80	+/-52.6	+/-51.8											
81.52	+/-51.5												

MAX. O.C. SPACING IF ANCHORING THROUGH THE FRAME PER SHEETS 3 & 4	MAX. O.C. SPACING IF ANCHORING THROUGH THE INTEGRAL FIN PER SHEET 4
APPLIES TO A, B, C OR D ANCHORS (SEE TABLE 2)	APPLIES TO E OR F ANCHORS (SEE TABLE 3)
15"	2.6" FOR E ANCHORS, 4" FOR F ANCHORS

TABLE DIMENSIONS MAY BE ORIENTED VERTICALLY OR HORIZONTALLY AS SHOWN.

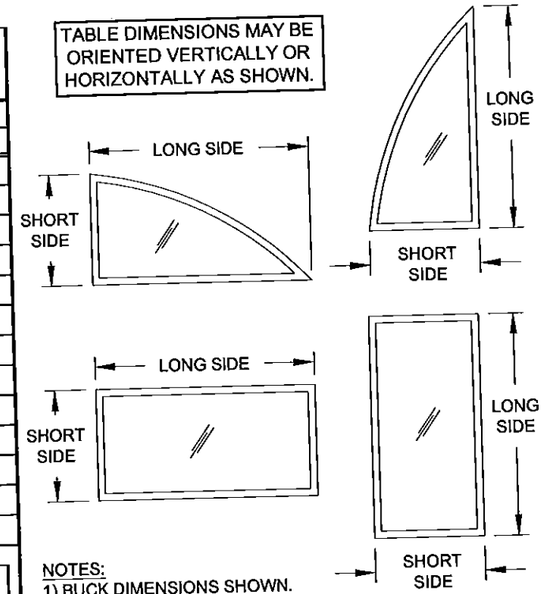

NOTES:
1) BUCK DIMENSIONS SHOWN.

2) FOR SIZES NOT SHOWN, ROUND UP TO THE NEXT AVAILABLE SHORT OR LONG DIMENSION.

3) FOR ARCHITECTURAL WINDOWS (SEE SHEET 2), FIND THE SMALLEST SQUARE WINDOW SIZE IN THE TABLE(S) ABOVE WHICH THE ARCHITECTURAL WINDOW WILL COMPLETELY FIT WITHIN.

TABLE 9:

Window Design Pressure, (+/- psf)

1/4" T Cap - Airspace - 1/4" T

Use this table for Glass Type: **6**

Short Side (in) \ Long Side (in)	84.85	86	90	92	94	97	100	102	105	109	112	116	120	124	128	133	138	144
46	+80/-96.2	+80/-95.7	+80/-94.2	+80/-93.5	+80/-92.8	+80/-91.9	+80/-91.1	+80/-90.5	+80/-89.8	+80/-88.9	+80/-88.2	+80/-87.5	+80/-86.7	+80/-86.1	+80/-85.5	+80/-84.8	+80/-84.1	+80/-83.5
48	+80/-93.7	+80/-93.2	+80/-91.6	+80/-90.9	+80/-90.2	+80/-89.3	+80/-88.4	+80/-87.9	+80/-87.1	+80/-86.2	+80/-85.5	+80/-84.7	+80/-84	+80/-83.3	+80/-82.7	+80/-82	+80/-81.3	+80/-80.6
50	+80/-91.5	+80/-91	+80/-89.3	+80/-88.6	+80/-87.9	+80/-86.9	+80/-86	+80/-85.5	+80/-84.7	+80/-83.7	+80/-83	+80/-82.2	+80/-81.5	+80/-80.8	+80/-80.2	+/-79.4	+/-78.8	+/-78.1
52	+80/-89.4	+80/-88.9	+80/-87.2	+80/-86.5	+80/-85.7	+80/-84.7	+80/-83.8	+80/-83.3	+80/-82.4	+80/-81.5	+80/-80.8	+/-80	+/-79.2	+/-78.5	+/-77.8	+/-77.1	+/-76.4	
54	+80/-87.6	+80/-87.1	+80/-85.3	+80/-84.5	+80/-83.8	+80/-82.8	+80/-81.8	+80/-81.2	+80/-80.4	+/-79.4	+/-78.7	+/-77.9	+/-77.1	+/-76.4	+/-75.7	+/-74.9		
56	+80/-86	+80/-85.4	+80/-83.6	+80/-82.8	+80/-82	+80/-81	+/-80	+/-79.4	+/-78.5	+/-77.5	+/-76.8	+/-75.9	+/-75.1	+/-74.4	+/-73.7			
58	+80/-84.5	+80/-83.9	+80/-82.1	+80/-81.2	+80/-80.4	+/-79.3	+/-78.3	+/-77.7	+/-76.8	+/-75.8	+/-75	+/-74.2	+/-73.3	+/-72.6				
60	+80/-83.2	+80/-82.6	+80/-80.6	+/-79.8	+/-79	+/-77.8	+/-76.8	+/-76.2	+/-75.3	+/-74.2	+/-73.4	+/-72.5	+/-71.7					
62	+80/-82	+80/-81.3	+/-79.4	+/-78.5	+/-77.6	+/-76.5	+/-75.4	+/-74.7	+/-73.8	+/-72.7	+/-71.9	+/-71						
64	+80/-80.9	+80/-80.3	+/-78.2	+/-77.3	+/-76.4	+/-75.2	+/-74.1	+/-73.4	+/-72.5	+/-71.3	+/-70.6							
66	+/-80	+/-79.3	+/-77.2	+/-76.2	+/-75.3	+/-74.1	+/-72.9	+/-72.2	+/-71.3	+/-70.1								
68	+/-79.2	+/-78.5	+/-76.2	+/-75.2	+/-74.3	+/-73	+/-71.9	+/-71.2	+/-70.2									
70	+/-78.4	+/-77.7	+/-75.4	+/-74.4	+/-73.4	+/-72.1	+/-70.9	+/-70.2										
72	+/-77.8	+/-77.1	+/-74.7	+/-73.6	+/-72.6	+/-71.2	+/-70											
74	+/-77.3	+/-76.5	+/-74	+/-72.9	+/-71.9	+/-70.5												
76	+/-76.9	+/-76	+/-73.5	+/-72.3	+/-71.2													
78	+/-76.5	+/-75.7	+/-73	+/-71.8														
80	+/-76.3	+/-75.4	+/-72.6															
83	+/-76.1	+/-75.1																
84.85	+/-76																	

MAX. O.C. SPACING IF ANCHORING THROUGH THE FRAME PER SHEETS 3 & 4	MAX. O.C. SPACING IF ANCHORING THROUGH THE INTEGRAL FIN PER SHEET 4
APPLIES TO B, C OR D ANCHORS (SEE TABLE 2)	APPLIES TO F ANCHORS (SEE TABLE 3)
15.5"	3.2"

Approved as complying with the Florida Buiding Code
Date April 30 2015
NOA# 14-0936.24
Miami Dade Product Control
By Manuel Perez

Rev 1	Rev 2	Rev 3

1070 TECHNOLOGY DRIVE
N. VENICE, FL 34275
P.O. BOX 1529
NOKOMIS, FL 34274
(941)-480-1600

PGT® CERT. OF AUTH. #29296

Series	Desc.	Title	Sheet	Scale	DWG No	Rev.
PW-5420	DESIGN PRESSURE TABLES C	VINYL FIXED WINDOW NOA (NI)	8 OF 9	NTS	MD-5420.0	

Drawn By: J ROSOWSKI
Date: 9/9/14

ANTHONY LYNN MILLER
LICENSE
No. 58705
STATE OF FLORIDA
PROFESSIONAL ENGINEER
4/23/15

A. LYNN MILLER, P.E.
P.E.# 58705

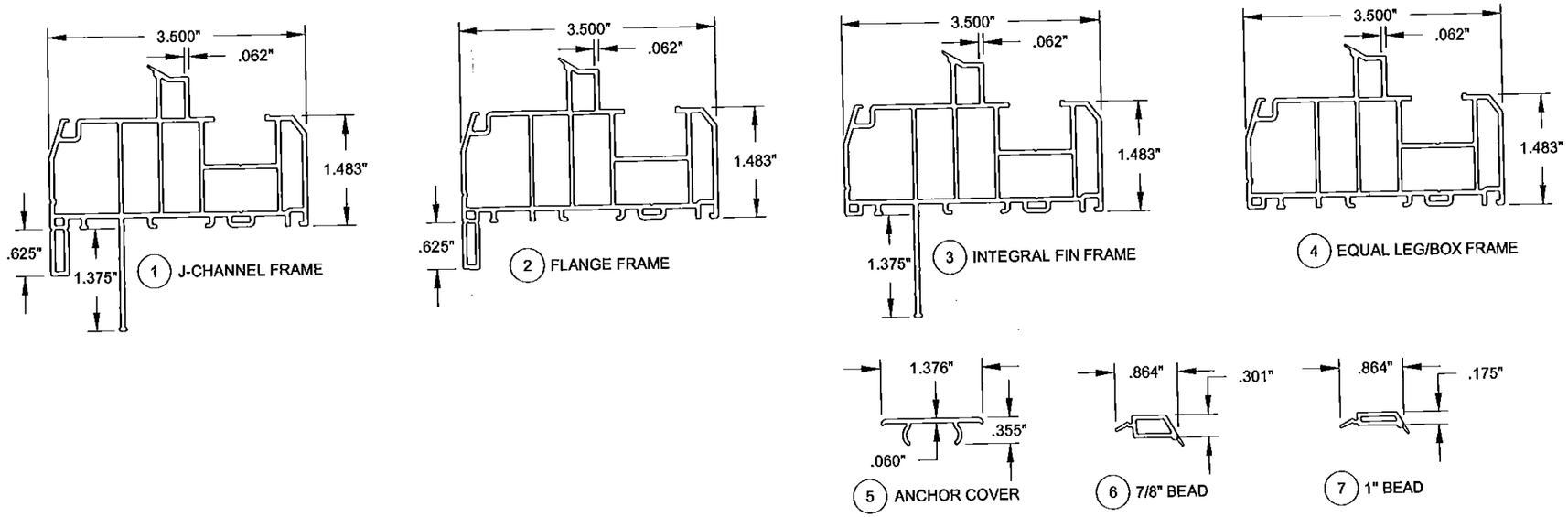

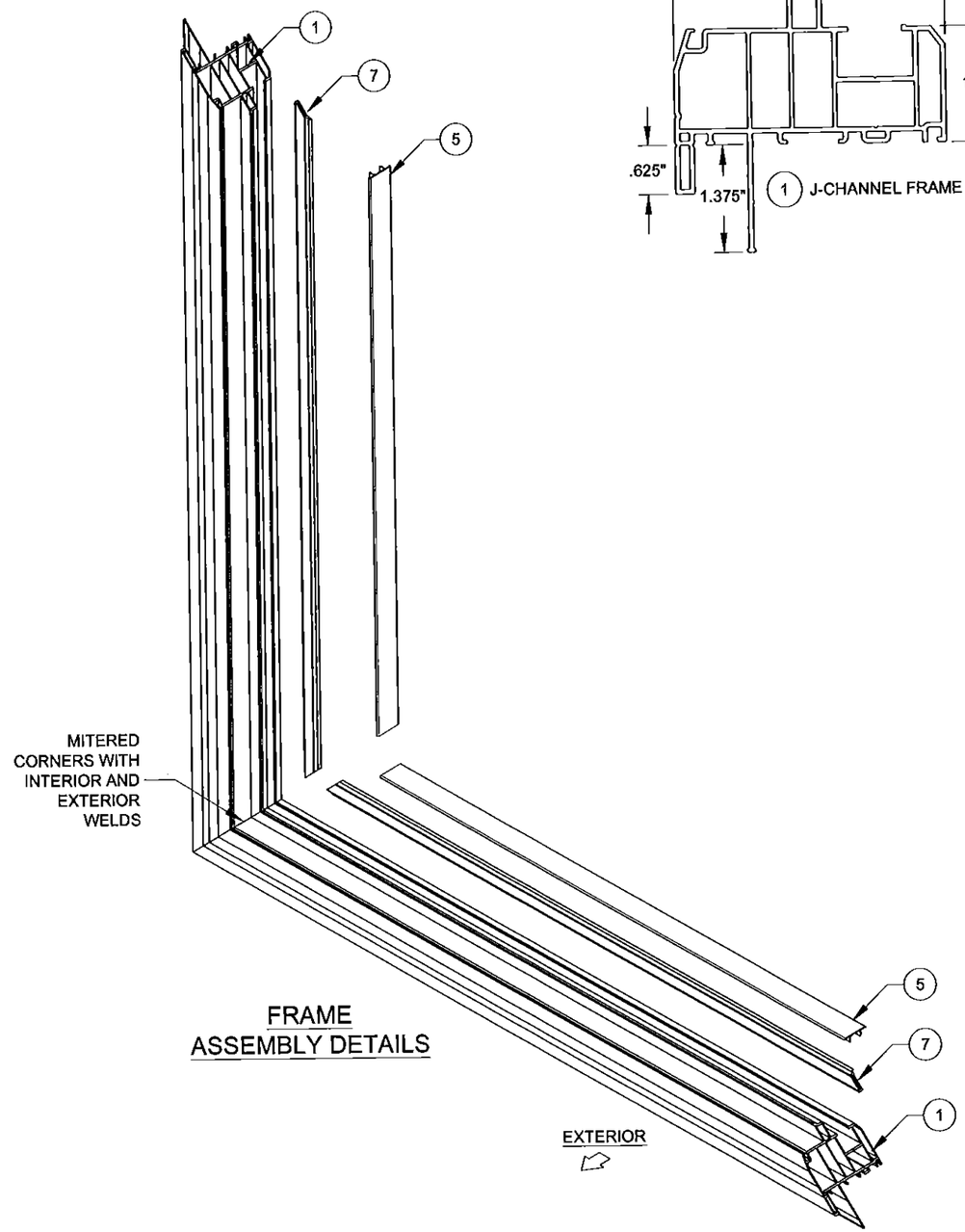

FRAME
ASSEMBLY DETAILS

TABLE 10:

#	Part #	Description	Material
1	620117	J-channel Frame	PVC
2	620118	Flange Frame	PVC
3	620119	Integral Fin Frame	PVC
4	620120	Equal Leg/Box Frame	PVC
5	620133	Anchor Cover	PVC
6	720136	7/8" Glazing Bead	PVC
7	720135	1" Glazing Bead	PVC
74		Backbedding, GE 7700 or Dow 791	Silicone
75		Quanex Super Spacer nXT with Hot Melt Butyl	Composite
76		Quanex Duraseal Spacer	Composite
77		Cardinal XL Edge Spacer	Composite
78	71646N	Setting Block (7/8" x 1" x 1/8"), 85 +/- 5 duro.	EPDM

NOTES:
1) SOME PARTS NOT SHOWN FOR CLARITY.
2) J-CHANNEL FRAME SHOWN, PARTS #1. OTHER FRAME TYPES APPLY.
3) ITEMS # 8-73 ARE NOT USED AND ARE NOT PART OF THIS APPROVAL.
4) ROYAL PVC TO BE LABELED FOR AAMA EXTRUDER CODE.

Approved as complying with the Florida Building Code
Date April 30, 2015
NOA# 14-0930.24
Miami Dade Product Control
By Manuel Perez

ANTHONY LYNN MILLER
LICENSE
No. 58705
4/23/15
STATE OF FLORIDA
PROFESSIONAL ENGINEER
A. LYNN MILLER, P.E.
P.E.# 58705

PGT®
CERT. OF AUTH. #29296
1070 TECHNOLOGY DRIVE
N. VENICE, FL 34275
(941)-480-1600

Title	VINYL FIXED WINDOW NOA (NI)			Date	9/9/14
Desc.	BOM & ASSEMBLY			Drawn By	J ROSOWSKI
Rev 1				Rev 1 Date	
Rev 2				Rev 2 Date	
Series	PW-5420	Scale NTS	Sheet 9 OF 9	DWG No. MD-5420.0	Rev. No.