MIAMI-DADE COUNTY
PRODUCT CONTROL SECTION
11805 SW 26 Street, Room 208
Miami, Florida 33175-2474
T (786) 315-2590 F (786) 315-2599
www.miamidade.gov/economy

DEPARTMENT OF REGULATORY AND ECONOMIC RESOURCES (RER)
BOARD AND CODE ADMINISTRATION DIVISION

NOTICE OF ACCEPTANCE (NOA)

Alucom, LLC.
2145 NW 115th Avenue
Miami, FL 33172

SCOPE:

This NOA is being issued under the applicable rules and regulations governing the use of construction materials. The documentation submitted has been reviewed and accepted by Miami-Dade County RER - Product Control Section to be used in Miami Dade County and other areas where allowed by the Authority Having Jurisdiction (AHJ).

This NOA shall not be valid after the expiration date stated below. The Miami-Dade County Product Control Section (In Miami Dade County) and/or the AHJ (in areas other than Miami Dade County) reserve the right to have this product or material tested for quality assurance purposes. If this product or material fails to perform in the accepted manner, the manufacturer will incur the expense of such testing and the AHJ may immediately revoke, modify, or suspend the use of such product or material within their jurisdiction. RER reserves the right to revoke this acceptance, if it is determined by Miami-Dade County Product Control Section that this product or material fails to meet the requirements of the applicable building code.

This product is approved as described herein, and has been designed to comply with the Florida Building Code including the High Velocity Hurricane Zone of the Florida Building Code.

DESCRIPTION: **Terrabella® Classic**
Terrabella® Verona
Terrabella® Shake

LABELING: Each unit shall bear a permanent label with the manufacturer's name or logo, city, state and following statement: "Miami-Dade County Product Control Approved", unless otherwise noted herein.

RENEWAL of this NOA shall be considered after a renewal application has been filed and there has been no change in the applicable building code negatively affecting the performance of this product.

TERMINATION of this NOA will occur after the expiration date or if there has been a revision or change in the materials, use, and/or manufacture of the product or process. Misuse of this NOA as an endorsement of any product, for sales, advertising or any other purposes shall automatically terminate this NOA. Failure to comply with any section of this NOA shall be cause for termination and removal of NOA.

ADVERTISEMENT: The NOA number preceded by the words Miami-Dade County, Florida, and followed by the expiration date may be displayed in advertising literature. If any portion of the NOA is displayed, then it shall be done in its entirety.

INSPECTION: A copy of this entire NOA shall be provided to the user by the manufacturer or its distributors and shall be available for inspection at the job site at the request of the Building Official.

This revises NOA No. 14-0416.06 and it consists of pages 1 through 14.
The submitted documentation was reviewed by Juan E. Collao, R.A.

MIAMI-DADE COUNTY APPROVED

Juan E. Collao

NOA No.: 14-1006.04
Expiration Date: 07/10/19
Approval Date: 02/26/15

ROOFING SYSTEM APPROVAL:	
Category:	Roofing
Sub-Category:	Non-Structural Metal Roofing
Material:	Steel
Deck Type:	Wood
Maximum Design Pressure (MDP):	*See Assembly Systems Reference Table*

TRADE NAMES OF PRODUCTS MANUFACTURED OR LABELED BY APPLICANT:

Product	Dimensions	Test Specifications	Product Description
Terrabella® Classic	Length: 53.2” Width: 16” Thickness: 26 ga., min 0.018” Min. Yield Strength: 38 ksi	TAS 110	Preformed Stone Coated Metal Panel Shingle
Terrabella® Verona	Length: 44.7” Width: 17.9” Thickness: 26 ga., min 0.018” Min. Yield Strength: 38 ksi	TAS 110	Preformed Stone Coated Metal Panel Shingle
Terrabella® Shake	Length: 53.54” Width: 16.34” Thickness: 26 ga., min. 0.018” Min. Yield Strength: 43.9 ksi	TAS 110	Preformed Stone Coated Metal Panel Shingle
Trim Pieces	Width = Varies Length = Varies Thickness = 0.018” min.	TAS 110	Standard flashing and trim pieces

MANUFACTURING LOCATION:

1.	San Pedro Sula, Honduras

EVIDENCE SUBMITTED:

Test Agency	Test Identifier	Test Name /Report	Date
PRI Construction Materials Technologies	ALCM-005-02-01	ASTM B 117	10/04/12
	ALCM-004-02-01	ASTM G 155	11/15/12
	ALCM-008-02-01	TAS 100	06/26/14
	ALCM-009-02-01	TAS 100	06/30/14
	ALCM-006-02-01	TAS 125	06/26/14
	ALCM-007-02-01	TAS 125	06/26/14
	ALCM-015-02-01	TAS 125	10/13/14
	ALCM-018-02-01	TAS 100	09/26/14
	Letter	TAS 100 / TAS 125	02/02/15
	Letter	TAS 100 / TAS 125	02/16/15

ASSEMBLY SYSTEMS REFERENCE TABLE:

System Type	Description	MDP *(psf)*	
		Field	*Perimeter & Corner*
A	Terrabella® Classic *(with battens)*	**-71.25**	**-150**
B	Terrabella® Verona *(with battens)*	**-112.5**	**-142.5**
C	Terrabella® Shake	**-71.25**	**-120**

APPROVED ASSEMBLIES:	
System A:	Terrabella® Classic
Deck Type 1:	Wood, Non-insulated
Deck Description:	New Construction $^{19}/_{32}$" or greater plywood or wood plank, or Re-roof $^{15}/_{32}$" or greater plywood or wood plank.
Slope Range:	2:12 or greater
Maximum Uplift Pressure:	**See Fastening Options Below**
Deck Attachment:	In accordance with applicable Building Code, but in no case shall it be less than 8d x 2 $^{3}/_{8}$" annular ring shank nails spaced 6" o.c. In reroofing, where the deck is less than $^{19}/_{32}$" thick (Minimum $^{15}/_{32}$"), the above attachment method must be in addition to existing attachment.
Underlayment:	Minimum underlayment shall be an ASTM D 226 Type II installed with a minimum 4" side-lap and 6" end-laps. Underlayment shall be fastened with corrosion resistant tin-caps and 12 gauge 1 ¼" annular ring-shank nails, spaced 6" o.c. at all laps and two staggered rows 12" o.c. in the field of the roll or any approved underlayment having a current NOA. Vertical laps at the valley shall be woven by extending the underlayment a minimum 12" past the valley center.
Fire Barrier Board:	Any approved fire barrier having a current NOA. Refer to a current fire directory listing for fire ratings of this roofing system assembly as well as the location of the fire barrier within the assembly. See Limitation #1.
Battens:	Install 2 x 2 wood battens over underlayment, running perpendicular to roof slope, at 15" o.c. Attach wood battens through the deck to wood trusses spaced 24" o.c. with one (1) #10 x 4" corrosion resistant wood screw. At the valley, the 2 x 2 wood battens are anchored 1" from the edge of the valley pan with one (1) #10 x 4" corrosion resistant screw. Install 2 x 2 wood batten along rake and secure to deck with one corrosion (1) #10 x 4" wood screw at 24" o.c.
Valleys:	Install 26 ga. 18 ½" wide preformed valley with 2 ¾" diverter. Valley construction shall be in compliance with Roofing Application Standard RAS 133 and with Alucom LLC's current published installation instructions.
Eave Termination:	26 ga. preformed 2" x 1 ½" drip edge shall be installed at the eave and shall be fastened to the deck in a staggered pattern with 12 ga. x 1 ¼" corrosion resistant ring shank nails at 4" o.c. and in accordance to RAS 111. Install 8" wide, 26 ga. stone coated eave trim over the drip edge into the fascia with corrosion resistant #9 x 1 ¼" pan head screws at 16" o.c. Extend eave trim over the first batten on deck and fasten with corrosion resistant #9 x 1 ¼" pan head screws at 16" o.c.

(Continued on next page)

Rake Termination:	Install 26 ga. preformed 2" x 1 ½" drip edge and fastened with corrosion resistant 12 ga. x 1 ¼" ring shank nails at 4" o.c. in a staggered pattern. Install 26 ga. 6 ½" x 1 ½" galvanized flashing over batten and fasten with corrosion resistant #9 x 1 ¼" pan head screws at 16" o.c. Install 26 ga. 2" x 2" galvanized angle closure at the rake edge into the top of batten with corrosion resistant #9 x 1 ¼" pan head screws at 16" o.c. Cap rake edge with 26 ga. stone coated metal rake trim fastened with two (2) #9 x 1 ¼" corrosion resistant pan head screws anchored to the batten at the rake and into the fascia.
Metal Panels and Accessories:	Install the "Terrabella® Classic" and accessories in compliance with the current installation instructions published by Alucom LLC. Flashings, penetrations, valley construction and other details shall be constructed in compliance with the minimum requirements provided in Roofing Application Standard RAS 133.
Field Condition:	Panels shall be fastened to battens with corrosion resistant #10-14 x 3" installed at a rate of four (4) fasteners per panel. One fastener is placed 2 ¼" from the panel edge in the lap at the vertical leg at a 45° angle to secure into batten. The remaining three (3) fasteners are installed on the vertical leg in similar fashion at 14 $^{5}/_{8}$" o.c. See **Detail 'A'** herein. Fasteners shall be of sufficient length to penetrate through the sheathing a minimum of $^{3}/_{16}$".
Maximum Design Pressure for Field Condition:	**-71.25 psf.** (See General Limitation #2)
Perimeter and Corner Condition:	Panels shall be fastened to battens with corrosion resistant #10-14 x 3" screws installed at a rate of seven (7) fasteners per panel. One fastener is placed 2 ¼" from the panel edge in the lap at the vertical leg at a 45° angle to secure into batten. The remaining six (6) fasteners are installed on the vertical leg in similar fashion at 7 $^{5}/_{16}$" o.c. See **Detail 'A'** herein. Fasteners shall be of sufficient length to penetrate through the sheathing a minimum of $^{3}/_{16}$".
Maximum Design Pressure for Perimeter And Corner Condition:	**-150 psf.** (See General Limitation #2)

System B:	Terrabella® Verona
Deck Type 1:	Wood, Non-insulated
Deck Description:	New Construction $^{19}/_{32}$" or greater plywood or wood plank, or Re-roof $^{15}/_{32}$" or greater plywood or wood plank.
Slope Range:	2:12 or greater
Maximum Uplift Pressure:	**See Fastening Options Below**
Deck Attachment:	In accordance with applicable Building Code, but in no case shall it be less than 8d x 2 $^{3}/_{8}$" annular ring shank nails spaced 6" o.c. In reroofing, where the deck is less than $^{19}/_{32}$" thick (Minimum $^{15}/_{32}$"), the above attachment method must be in addition to existing attachment.
Underlayment:	Minimum underlayment shall be an ASTM D 226 Type II installed with a minimum 4" side-lap and 6" end-laps. Underlayment shall be fastened with corrosion resistant tin-caps and 12 gauge 1 ¼" annular ring-shank nails, spaced 6" o.c. at all laps and two staggered rows 12" o.c. in the field of the roll or any approved underlayment having a current NOA. Vertical laps at the valley shall be woven by extending the underlayment a minimum 12" past the valley center.
Fire Barrier Board:	Any approved fire barrier having a current NOA. Refer to a current fire directory listing for fire ratings of this roofing system assembly as well as the location of the fire barrier within the assembly. See Limitation #1.
Battens:	Install 2 x 2 wood battens over underlayment, running perpendicular to roof slope, at 15 ¾" o.c. Attach wood battens through the deck to wood trusses spaced 24" o.c. with one (1) #10 x 4" corrosion resistant wood screw. At the valley, the 2 x 2 battens are anchored 1" from the edge of the valley pan with one (1) #10 x 4" corrosion resistant screw. Install 2 x 2 wood batten along rake and secure to deck with one corrosion (1) #10 x 4" wood screw at 24" o.c.
Valleys:	Install 26 ga. 18 ½" wide preformed valley with 2 ¾" diverter. Valley construction shall be in compliance with Roofing Application Standard RAS 133 and with Alucom LLC's current published installation instructions.
Eave Termination:	26 ga. preformed 2" x 1 ½" drip edge shall be installed at the eave and shall be fastened to the deck in a staggered pattern with 12 ga. x 1 ¼" corrosion resistant ring shank nails at 4" o.c. and in accordance to RAS 111. Install 8" wide, 26 ga. stone coated eave trim over the drip edge into the fascia with corrosion resistant #9 x 1 ¼" pan head screws at 16" o.c. Extend eave trim over the first batten on deck and fasten with corrosion resistant #9 x 1 ¼" pan head screws at 16" o.c.

(Continued on next page)

Rake Termination:	Install 26 ga. preformed 2" x 1 ½" drip edge and fastened with corrosion resistant 12 ga. x 1 ¼" ring shank nails at 4" o.c. in a staggered pattern. Install 26 ga. galvanized flashing over batten and fasten with corrosion resistant #9 x 1 ¼" pan head screws at 16" o.c. Install 26 ga. 2" x 2" galvanized angle closure at the rake edge into the top of batten with corrosion resistant #9 x 1 ¼" pan head screws at 16" o.c. Cap rake edge with 26 ga. stone coated metal rake trim fastened with two (2) #9 x 1 ¼" corrosion resistant pan head screws anchored to the batten at the rake and into the fascia.
Metal Panels and Accessories:	Install the "Terrabella® Verona" and accessories in compliance with the current installation instructions published by Alucom LLC. Flashings, penetrations, valley construction and other details shall be constructed in compliance with the minimum requirements provided in Roofing Application Standard RAS 133.
Field Condition:	Panels shall be fastened to battens with corrosion resistant #10-14 x 3" installed at a rate of five (5) fasteners per panel. Two fasteners are placed 1" and 4 $^{5}/_{8}$" from the panel edge in the lap at the vertical leg at a 45° angle to secure into batten. The remaining three (3) fasteners are installed on the vertical leg in similar fashion at 10" o.c. See **Detail 'B'** herein. Fasteners shall be of sufficient length to penetrate through the sheathing a minimum of $^{3}/_{16}$".
Maximum Design Pressure for Field Condition:	**-112.5 psf.** (See General Limitation #2)
Perimeter and Corner Condition:	Panels shall be fastened to battens with corrosion resistant #10-14 x 3" screws installed at a rate of eight (8) fasteners per panel or four pairs. Fasteners are placed at 1", 4 $^{5}/_{8}$", 11", 14 $^{5}/_{8}$", 21", 24 $^{5}/_{8}$", 31" and 34 $^{5}/_{8}$" from the panel edge in the lap at the vertical leg at a 45° angle to secure into batten. See **Detail 'B'** herein. Fasteners shall be of sufficient length to penetrate through the sheathing a minimum of $^{3}/_{16}$".
Maximum Design Pressure for Perimeter And Corner Condition:	**-142.5 psf.** (See General Limitation #2)

System C:	Terrabella® Shake
Deck Type 1:	Wood, Non-insulated
Deck Description:	New Construction $^{19}/_{32}$" or greater plywood or wood plank, or Re-roof $^{15}/_{32}$" or greater plywood or wood plank.
Slope Range:	2:12 or greater
Maximum Uplift Pressure:	**See Fastening Options Below**
Deck Attachment:	In accordance with applicable Building Code, but in no case shall it be less than 8d x 2 $^{3}/_{8}$" annular ring shank nails spaced 6" o.c. In reroofing, where the deck is less than $^{19}/_{32}$" thick (Minimum $^{15}/_{32}$"), the above attachment method must be in addition to existing attachment.
Underlayment:	Minimum underlayment shall be an ASTM D 226 Type II installed with a minimum 4" side-lap and 6" end-laps. Underlayment shall be fastened with corrosion resistant tin-caps and 12 gauge 1 ¼" annular ring-shank nails, spaced 6" o.c. at all laps and two staggered rows 12" o.c. in the field of the roll or any approved underlayment having a current NOA. Vertical laps at the valley shall be woven by extending the underlayment a minimum 12" past the valley center.
Fire Barrier Board:	Any approved fire barrier having a current NOA. Refer to a current fire directory listing for fire ratings of this roofing system assembly as well as the location of the fire barrier within the assembly. See Limitation #1.
Valleys:	Install 26 ga. 18 ½" wide preformed valley with 2 ¾" diverter. Valley construction shall be in compliance with Roofing Application Standard RAS 133 and with Alucom LLC's current published installation instructions.
Eave Termination:	26 ga. preformed 3 ¼" x 2 ¾" drip edge shall be installed at the eave and shall be fastened to the deck in a staggered pattern with 12 ga. x 1 ¼" corrosion resistant ring shank nails at 4" o.c. and in accordance to RAS 111.
Rake Termination:	Install 26 ga. preformed 3 ¼" x 2 ¾" drip edge and fastened with corrosion resistant 12 ga. x 1 ¼" ring shank nails at 4" o.c. in a staggered pattern. Install a 2 x 2 wood batten along the rake and secure with corrosion resistant #10 x 4" HWH wood screw. Install 26 ga. rake trim over the batten and fastened with #9-15 x 2 ½" HWH wood screws spaced at 12" o.c.

(Continued on next page)

Metal Panels and Accessories:	Install the "Terrabella® Shake" and accessories in compliance with the current installation instructions published by Alucom LLC. Flashings, penetrations, valley construction and other details shall be constructed in compliance with the minimum requirements provided in Roofing Application Standard RAS 133.
Field Condition:	Panels shall be fastened to the deck with twelve (12) corrosion resistant #9-15 x 2 ½" HWH wood screws, six (6) screws along back flange and six (6) screws through the nose of panel at the panel overlap. One fastener is placed at each panel side lap approximately 1 ½" from the panel edge with the remaining fasteners spaced along the length of the panel as shown in **Detail 'C'**. Fasteners shall be of sufficient length to penetrate through the sheathing a minimum of $^{3}/_{16}$".
Maximum Design Pressure for Field Condition:	**-71.25 psf.** (See General Limitation #2)
Perimeter and Corner Condition:	Panels shall be fastened to the deck with sixteen (16) corrosion resistant #9-15 x 2 ½" HWH wood screws, eight (8) screws along back flange and eight (8) screws through the nose of panel at the panel overlap. One fastener is placed at each panel side lap approximately 1 ½" from the panel edge with the remaining fasteners spaced along the length of the panel as shown in **Detail 'C'.** Fasteners shall be of sufficient length to penetrate through the sheathing a minimum of $^{3}/_{16}$".
Maximum Design Pressure for Perimeter And Corner Condition:	**-120 psf.** (See General Limitation #2)

GENERAL LIMITATIONS:

1. Fire classification is not part of this acceptance; refer to a current Approved Roofing Materials Directory for fire ratings of this product.

2. The maximum designed pressure listed herein shall be applicable to all roof pressure zones (i.e. field, perimeters, and corners). Neither rational analysis, nor extrapolation shall be permitted for enhanced fastening at enhanced pressure zones (i.e. perimeters, extended corners and corners).

3. All panels shall be permanently labeled with the manufacturer's name and/or logo, city and state of manufacturing facility, and the following statement: "Miami-Dade County Product Control Approved" **or** with the Miami-Dade County Product Control Seal as seen below. All clips (if applicable) shall be permanently labeled with the manufacturer's name and/or logo, and/or model.

4. All products listed herein shall have a quality assurance audit in accordance with the Florida Building Code and Rule 61G20-3 of the Florida Administrative Code.

5. Any modifications to this Notice of Acceptance shall void such approval.

PROFILE DRAWINGS

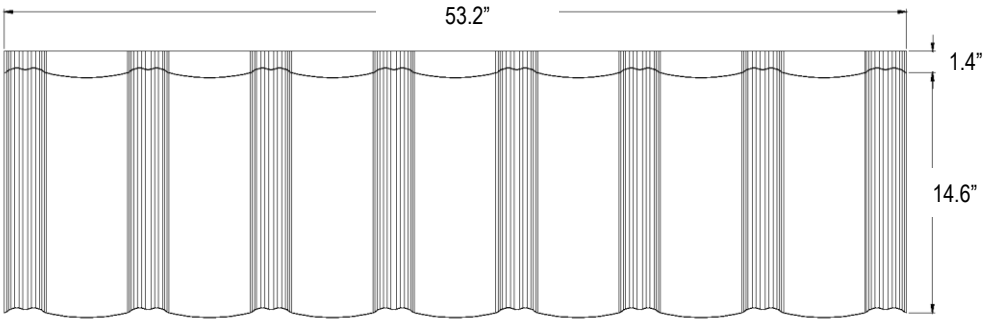

TERRABELLA® CLASSIC

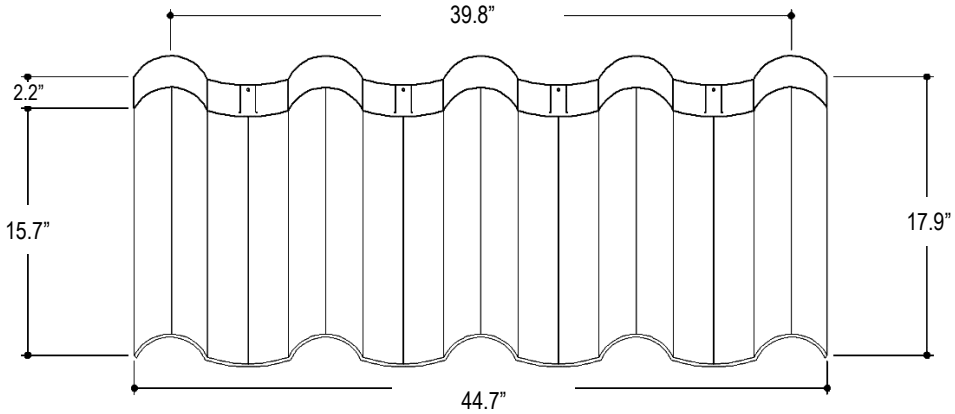

TERRABELLA® VERONA

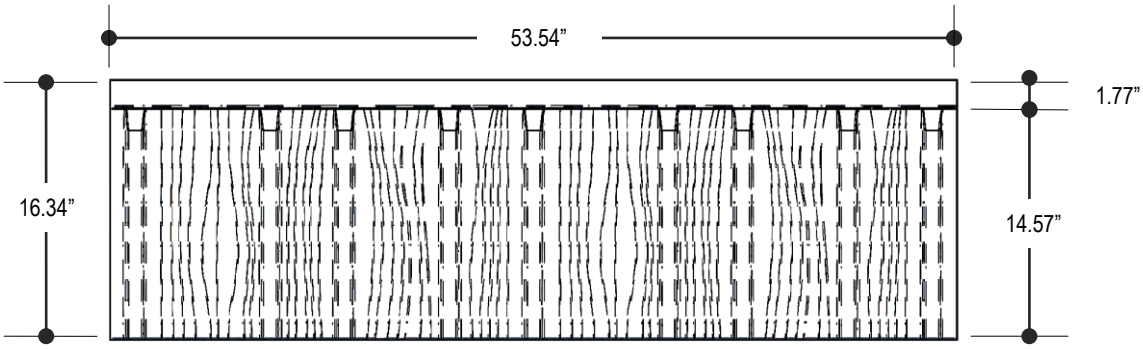

TERRABELLA® SHAKE

DETAIL 'A'
TERRABELLA® CLASSIC

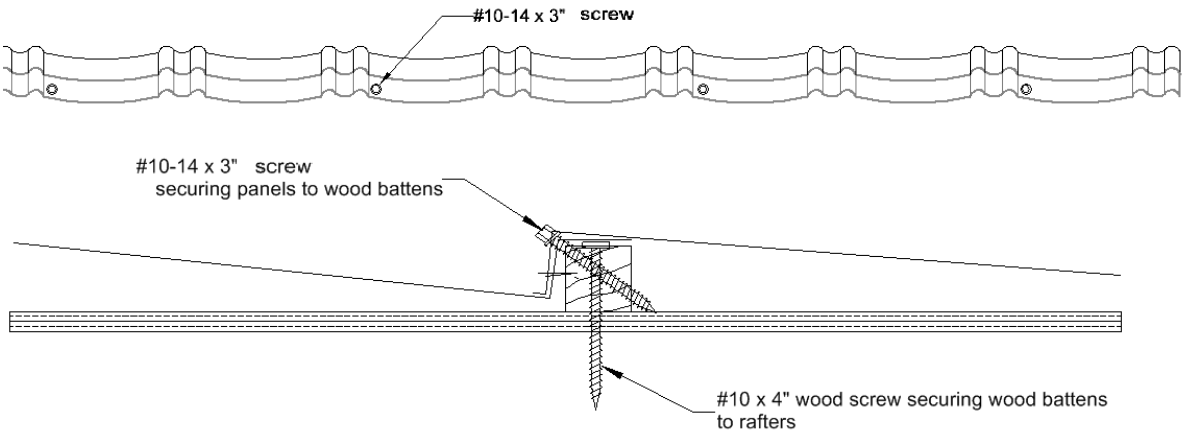

FIELD INSTALLATION
(4 SCREWS PER PANEL)

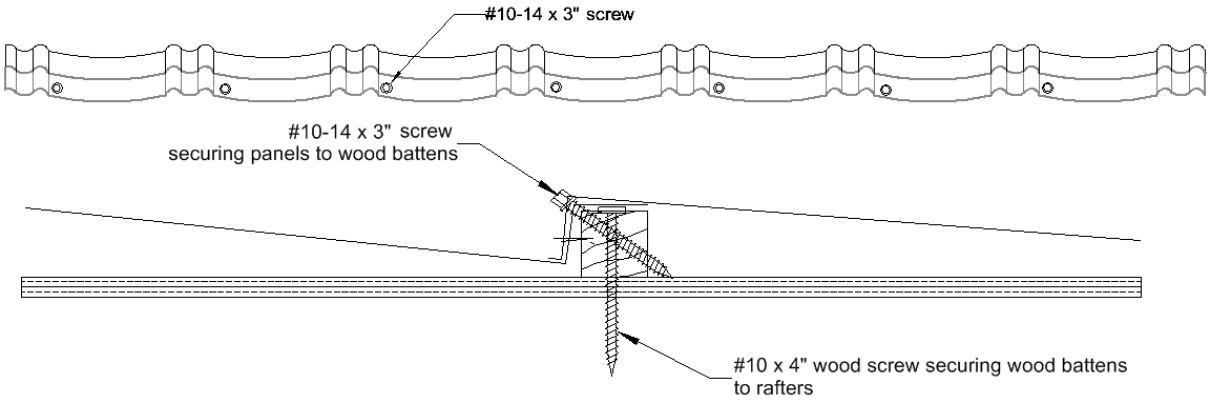

PERIMETER & CORNER INSTALLATION
(7 SCREWS PER PANEL)

DETAIL 'B'
TERRABELLA® VERONA

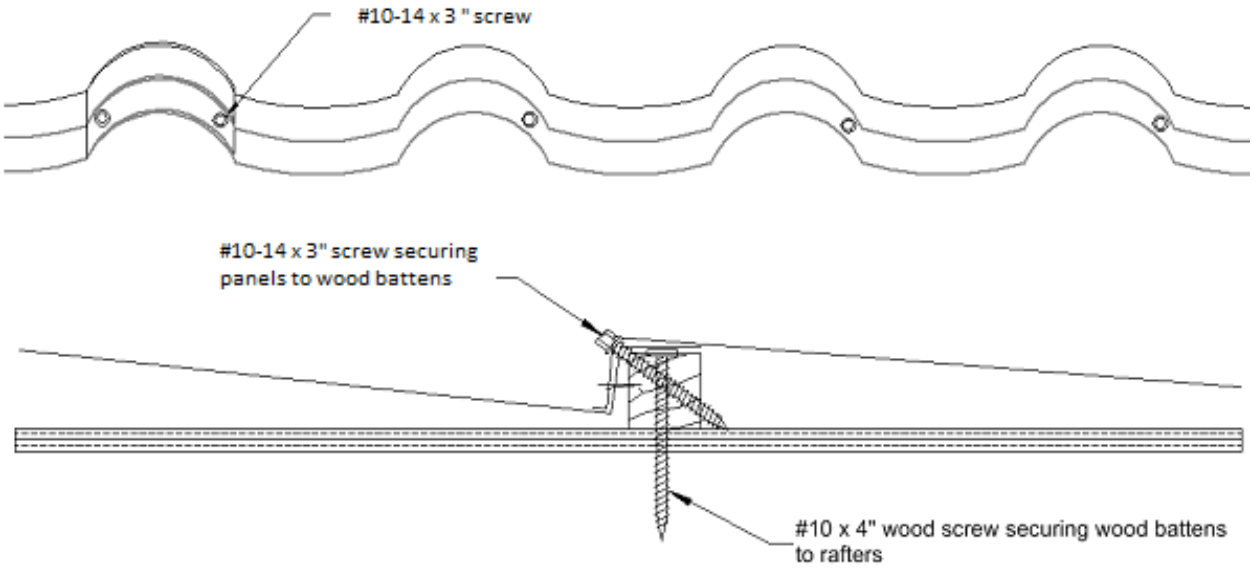

FIELD INSTALLATION
(5 SCREWS PER PANEL)

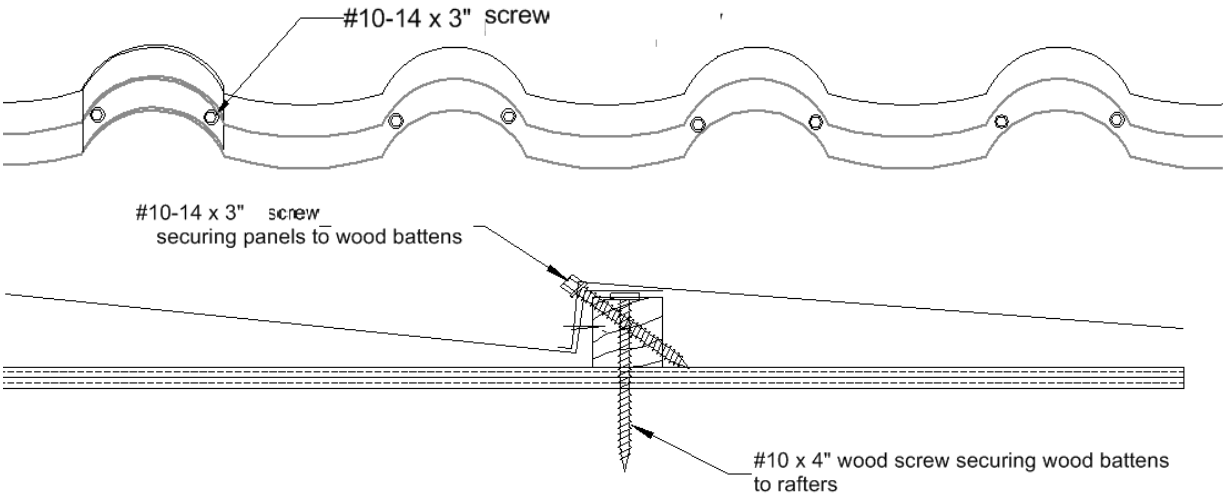

PERIMETER & CORNER INSTALLATION
(8 SCREWS PER PANEL)

DETAIL 'C'
TERRABELLA® SHAKE

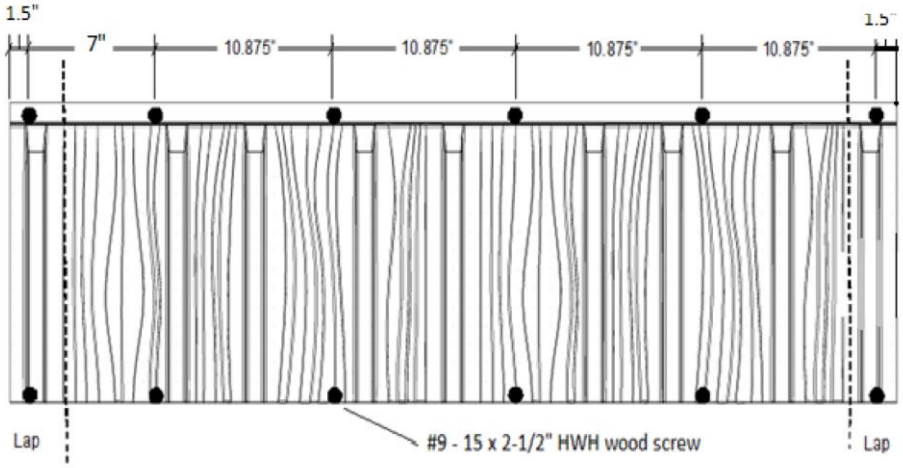

FIELD INSTALLATION
(12 SCREWS PER PANEL)

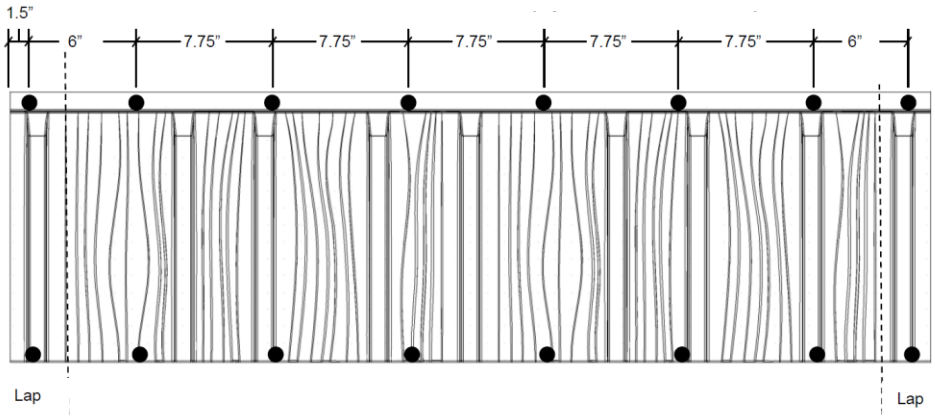

PERIMETER & CORNER INSTALLATION
(16 SCREWS/PANEL)

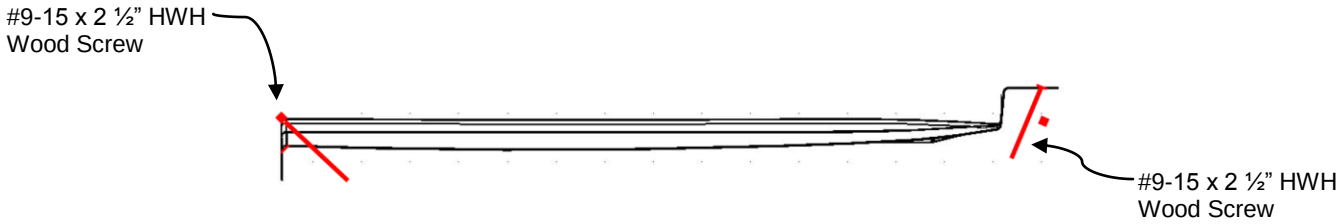

SECTION VIEW OF FASTENER LOCATIONS

END OF THIS ACCEPTANCE