MIAMI-DADE COUNTY
DEPARTMENT OF REGULATORY AND ECONOMIC RESOURCES (RER)
BOARD AND CODE ADMINISTRATION DIVISION

MIAMI-DADE COUNTY
PRODUCT CONTROL SECTION
11805 SW 26 Street, Room 208
T (786) 315-2590 F (786) 315-2599
www.miamidade.gov/economy

# NOTICE OF ACCEPTANCE (NOA)

**WinDoor, Inc.**
**7500 Amsterdam Drive**
**Orlando, FL 32832**

**SCOPE:**

This NOA is being issued under the applicable rules and regulations governing the use of construction materials. The documentation submitted has been reviewed and accepted by Miami-Dade County RER - Product Control Section to be used in Miami Dade County and other areas where allowed by the Authority Having Jurisdiction (AHJ).

This NOA shall not be valid after the expiration date stated below. The Miami-Dade County Product Control Section (In Miami Dade County) and/or the AHJ (in areas other than Miami Dade County) reserve the right to have this product or material tested for quality assurance purposes. If this product or material fails to perform in the accepted manner, the manufacturer will incur the expense of such testing and the AHJ may immediately revoke, modify, or suspend the use of such product or material within their jurisdiction. RER reserves the right to revoke this acceptance, if it is determined by Miami-Dade County Product Control Section that this product or material fails to meet the requirements of the applicable building code.

This product is approved as described herein, and has been designed to comply with the Florida Building Code, including the High-Velocity Hurricane Zone.

**DESCRIPTION: Series "3000/4000" Clipped, Aluminum Tube Mullion – L.M.I.**

**APPROVAL DOCUMENT:** Drawing No. **FEI0009**, titled "Series 3000/4000 Impact Mullion (LMI & SMI)", sheets 1 through 11 of 11, dated 07/22/11, with revision B dated 09/29/14, prepared by PTC Product Design Group, LLC, signed and sealed by Robert James Amoruso, P.E., bearing the Miami-Dade County Product Control Revision stamp with the Notice of Acceptance number and expiration date by the Miami-Dade County Product Control Section.

**MISSILE IMPACT RATING: Large and Small Missile Impact Resistant**

**LABELING:** Each unit shall bear a permanent label with the manufacturer's name or logo, city, state, model/series, and following statement: "Miami-Dade County Product Control Approved", unless otherwise noted herein.

**RENEWAL** of this NOA shall be considered after a renewal application has been filed and there has been no change in the applicable building code negatively affecting the performance of this product.

**TERMINATION** of this NOA will occur after the expiration date or if there has been a revision or change in the materials, use, and/or manufacture of the product or process. Misuse of this NOA as an endorsement of any product, for sales, advertising or any other purposes shall automatically terminate this NOA. Failure to comply with any section of this NOA shall be cause for termination and removal of NOA.

**ADVERTISEMENT:** The NOA number preceded by the words Miami-Dade County, Florida, and followed by the expiration date may be displayed in advertising literature. If any portion of the NOA is displayed, then it shall be done in its entirety.

**INSPECTION:** A copy of this entire NOA shall be provided to the user by the manufacturer or its distributors and shall be available for inspection at the job site at the request of the Building Official.

This NOA **revises and renews NOA# 12-0320.14** and consists of this page 1 and evidence page E-1, as well as approval document mentioned above.

The submitted documentation was reviewed by **Manuel Perez, P.E.**

MIAMI-DADE COUNTY APPROVED

2/19/15

## NOTICE OF ACCEPTANCE: EVIDENCE SUBMITTED

**A. DRAWINGS**

1. Manufacturer's die drawings and sections.
2. Drawing No **FEI0009**, Sheets 1 through 11 of 11, titled "Series 3000/4000 Impact Mullion (LMI & SMI)", dated 07/22/11, with revision B dated 09/29/14, prepared by PTC Product Design Group, LLC, signed and sealed by Robert James Amoruso, P.E.

**B. TESTS**

1. Test reports on: 1) Air Infiltration Test, per FBC, TAS 202-94
   2) Uniform Static Air Pressure Test, Loading per FBC TAS 202-94
   3) Water Resistance Test, per FBC, TAS 202-94
   4) Small Missile Impact Test per FBC, TAS 201-94
   5) Large Missile Impact Test per FBC, TAS 201-94
   6) Cyclic Wind Pressure Loading per FBC, TAS 203-94
   7) Forced Entry Test, per FBC 2411 3.2.1, TAS 202-94

   along with marked-up drawings and installation diagram of series 5000 aluminum single hung windows mulled together, prepared by National Certified Testing Laboratories, Test Report No. **NCTL-210-3567-3**, specimens: **#1-(TSH-7), #2-(TSH-8), #3-(SH-7), #4-(SH-8),** dated 12/18/08, signed and sealed by Gerard John Ferrara, P.E. ***(Submitted under NOA #09-0610.12)***

**C. CALCULATIONS**

1. Anchor verification calculations and structural analysis, complying with **FBC-5th Edition (2014)**, dated 09/29/14, prepared by PTC, LLC, signed and sealed by Robert James Amoruso, P.E.

**D. QUALITY ASSURANCE**

1. Miami–Dade Department of Regulatory and Economic Resources (RER).

**E. MATERIAL CERTIFICATIONS**

1. None.

**F. STATEMENTS**

1. Statement letter of conformance, complying with **FBC-5th Edition (2014)**, and of no financial interest, dated 08/26/14, issued by PTC Product Design Group, LLC, signed and sealed by Robert J. Amoruso, P.E.
2. Laboratory compliance letter for Test Report No. **NCTL-210-3567-3**, issued by National Certified Testing Laboratories, dated March 4, 2009, signed and sealed by Gerard J. Ferrara, P.E. ***(Submitted under NOA #09-0610.12)***

**G. OTHERS**

1. Notice of Acceptance No. **12-0320.14**, issued to WinDoor, Inc. for their Series "3000/4000" Aluminum Tube Mullion – L.M.I., approved on 05/31/12 and expiring on 10/14/14.

Manuel Perez

**Manuel Perez, P.E.**
**Product Control Examiner**
**NOA No. 14-1014.05**
**Expiration Date: October 14, 2019**
**Approval Date: February 26, 2015**

# WINDOOR, Inc.

## *IMPACT Mullion for SH & Fixed Window, LMI & SMI*

### *INSTALLATION ANCHORAGE DETAILS*

**GENERAL NOTES:** (ALL DRAWING SHEETS)

1. WINDOOR'S WINDOW CONFIGURATIONS FOR USE WITH THE WINDOOR MULLION SHOWN ON SHEET 3, ITEM 1 ARE SHOWN ON SHEET 2 ELEVATIONS. WINDOOR'S WINDOWS APPROVED UNDER SEPARATE NOAS.

2. THESE MULLION SYSTEMS HAVE BEEN TESTED (TEST REPORT NO. NCTL-210-3744-3), ANALYZED AND APPROVED FOR DESIGN PRESSURES NOT TO EXCEED THOSE SHOWN ON THESE DRAWINGS.

3. BLOCK AND FRAME OPENINGS MUST BE DESIGNED & CONSTRUCTED TO WITHSTAND WIND LOADS TRANSFERRED BY THE MULLIONS & SUPPORTED WINDOWS. 1X AND 2X BUCKS SHOWN SHALL BE DESIGNED AND ANCHORED TO PROPERLY TRANSFER ALL LOADS TO THE STRUCTURE AND ARE THE RESPONSIBILITY OF THE ARCHITECT OR ENGINEER OF RECORD AS REQUIRED BY WINDOOR'S MIAMI DADE APPROVED NOA WINDOW INSTALLATION.

4. ALL HARDWARE & FASTENERS SHALL BE IN ACCORDANCE WITH THESE DRAWINGS & MAY NOT VARY UNLESS SPECIFICALLY APPROVED BY THE ARCHITECT OR ENGINEER OF RECORD UNDER SEPARATE ENGINEERING EVALUATION.

5. THESE MULLION SYSTEMS HAVE BEEN DESIGNED IN ACCORDANCE WITH THE CURRENT EDITION OF THE FLORIDA BUILDING CODE (FBC) INCLUDING THE WIND BORNE DEBRIS REGION (WBDR) AND THE HIGH VELOCITY HURRICANE ZONE (HVHZ).

6. THE MULLION PRODUCT HAS BEEN TESTED IN ACCORDANCE WITH DADE COUNTY PROTOCOLS TAS-201, TAS-202 & TAS-203 FOR LARGE AND SMALL MISSILE IMPACT & CYCLE TESTING AND AIR, WATER & STRUCTURAL TESTING.

7. ALL PRODUCTS TO BE USED WITH THESE MULLIONS MUST BE WINDOOR'S SERIES 4000 ALUMINUM SINGLE HUNG OR SERIES 3000 FIXED WINDOWS MANUFACTURED BY WINDOOR AND HOLDING A MIAMI DADE APPROVED NOTICE OF ACCEPTANCE (NOA).

8. ALLOWABLE PRESSURE ON THE MULLED UNIT ASSEMBLY SHALL BE CONTROLLED BY THE LESSER ALLOWABLE PRESSURE OF THE MULLION OR THE INDIVIDUAL WINDOW UNIT.

9. FOR WINDOW FRAME TO OPENING ATTACHMENT AND MULLION ATTACHMENT, SEE THE RESPECTIVE PRODUCT APPROVAL DRAWINGS FOR THE WINDOW.

10. MULLION LENGTHS, TRIBUTARY LOAD AND DESIGN PRESSURE ARE RESTRICTED BY THOSE SHOWN ON THE TABLES.

11. THE LOADS IN THESE TABLES CONSIDER WORST CASE OF MULLION STRESS, DEFLECTION AND END LOAD REACTION.

12. ANY CONDITIONS NOT COVERED IN THIS APPROVAL SHALL BE SUBJECT TO SEPARATE ENGINEERING EVALUATION TO BE REVIEWED BY BUILDING OFFICIAL.

13. ALL MULLIONS AND CLIPS SHALL BE 6063-T6 ALUMINUM.

14. MATERIALS, INCLUDING BUT NOT LIMITED TO STEEL SCREWS, THAT COME INTO CONTACT WITH OTHER DISSIMILAR MATERIALS SHALL MEET THE REQUIREMENTS OF CURRENT EDITION OF THE FLORIDA BUILDING CODE.

TABLE OF CONTENTS


| SHEET | REV. | SHEET DESCRIPTION |
|---|---|---|
| 1 | — | GENERAL AND INSTALLATION NOTES |
| 2 | — | MULLION ELEVATIONS |
| 3 | — | BILL OF MATERIALS & COMPONENTS |
| 4 | — | VERTICAL SECTIONS |
| 5 | — | VERTICAL SECTIONS |
| 6 | — | VERTICAL SECTIONS |
| 7 | — | HORIZONTAL SECTIONS |
| 8 | — | ANCHOR SCHEDULE |
| 9 | — | DESIGN PRESSURE TABLES |
| 10 | — | DESIGN PRESSURE TABLES |
| 11 | — | DESIGN PRESSURE TABLES |


**INSTALLATION NOTES:**

1. THE NUMBER OF INSTALLATION ANCHORS DEPICTED IS THE MINIMUM NUMBER OF ANCHORS TO BE USED FOR MULLION INSTALLATION.

2. FOR INSTALLATION INTO CONCRETE SUBSTRATE, USE 3/16" DIAMETER CONCRETE SCREWS OF SUFFICIENT LENGTH TO ACHIEVE 1 3/4" EMBEDMENT INTO CONCRETE.

3. FOR INSTALLATION INTO WOOD FRAMING, USE #10 WOOD SCREWS OR TAPPING SCREWS (TYPE AB) OF SUFFICIENT LENGTH TO ACHIEVE 1 7/16" MINIMUM EMBEDMENT.

4. MINIMUM EMBEDMENT AND EDGE DISTANCE EXCLUDE WALL FINISHES (INCLUDING BUT NOT LIMITED TO STUCCO, FOAM, BRICK VENEER, AND SIDING).

5. INSTALLATION ANCHORS MUST BE MADE OF CORROSION RESISTANT MATERIAL OR HAVE A CORROSION RESISTANT COATING.

6. INSTALLATION ANCHORS SHALL BE INSTALLED IN ACCORDANCE WITH ANCHOR MANUFACTURER'S INSTALLATION INSTRUCTIONS, AND ANCHORS SHALL NOT BE USED IN SUBSTRATES WITH STRENGTHS LESS THAN THE MINIMUM STRENGTH SPECIFIED BY THE ANCHOR MANUFACTURER IN NOTE 7 BELOW.

7. INSTALLATION ANCHOR CAPACITIES FOR PRODUCTS HEREIN ARE BASED ON SUBSTRATE MATERIALS WITH THE FOLLOWING PROPERTIES:
   A. WOOD PT SOUTHERN YELLOW PINE - MINIMUM SPECIFIC GRAVITY IS 0.55. LUMBER MUST COMPLY WITH THE CURRENT EDITION OF THE FBC WITH REGARDS TO WOOD PROTECTION.
   B. CONCRETE= 3000 PSI MIN.

REVISIONS

| SHEET | REV | DESCRIPTION | DATE | BY |
|---|---|---|---|---|
| 1 | B | UPDATE TO 5TH EDITION FBC (2014) | 9/29/14 | RJA |
| 1 | A | UPDATE TO 2010 FBC | 02/14/12 | JBH |

This drawing and all associated component files are the sole property of WinDoor, Inc. and contains confidential, privileged and patented information. Any reproduction of this drawing is not permitted without written approval from WinDoor, Inc. management.

Robert J. Amoruso, P.E.
FL License No. 49752

ROBERT JAMES AMORUSO LICENSE No 49752 STATE OF FLORIDA PROFESSIONAL ENGINEER
9/29/14

PTC Product Design Group, LLC
PO Box 520775
Longwood, FL 32752-0775
321-690-1788 (P) 321-690-1789 (F)
FBPE Cert. of Auth. No. 25935

PRODUCT REVISED
as complying with the Florida Building Code
Acceptance No 14.1014.05
Expiration Date Oct. 14, 2019
By Manuel Perez
Miami Dade Product Control

WINDOOR INCORPORATED
7500 AMSTERDAM DRIVE
ORLANDO, FL 32832
Phone: 407.481.8400
Fax: 407.481.0505
www.windoorinc.com

DRAWING TITLE:
SERIES 3000/4000 IMPACT MULLION ( LMI & SMI)
GENERAL AND INSTALLATION NOTES

| SIZE | DRAWN BY: | DWG NO. | REV |
|---|---|---|---|
| . | JBH | FEI0009 | B |

| SCALE | DATE: | SHEET |
|---|---|---|
| NTS | 07/22/11 | 1OF11 |

## EQUAL LEG FRAME ELEVATIONS

SEE SHEET 4, VERTICAL SECTIONS & SHEET 7, HORIZONTAL SECTIONS

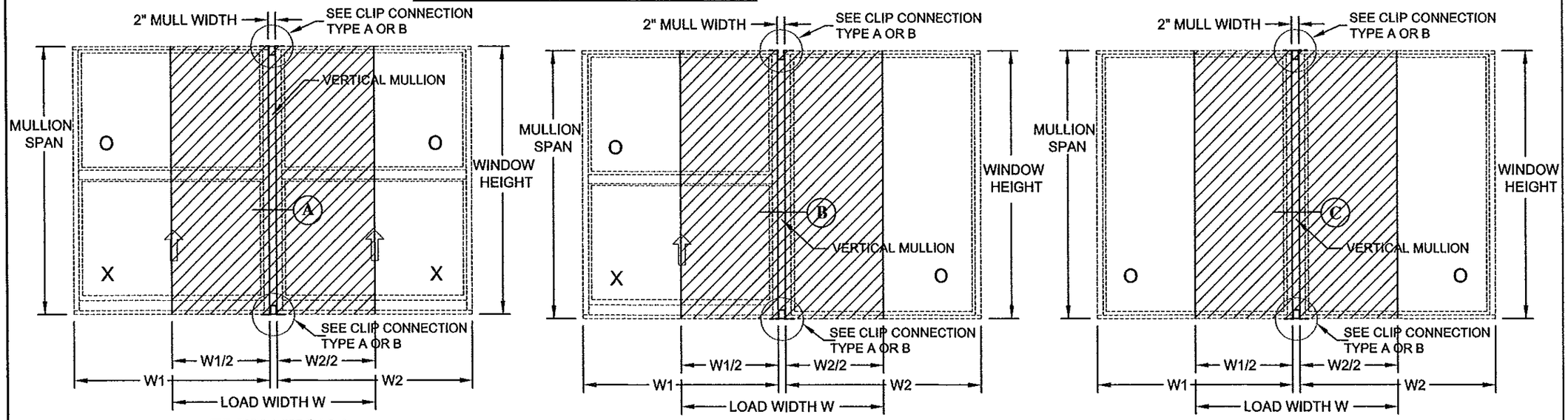


ELEVATION 1 ELEVATION 2 ELEVATION 3

## FLANGE FRAME ELEVATIONS

SEE SHEET 5 & 6, VERTICAL SECTIONS & SHEET 7, HORIZONTAL SECTIONS

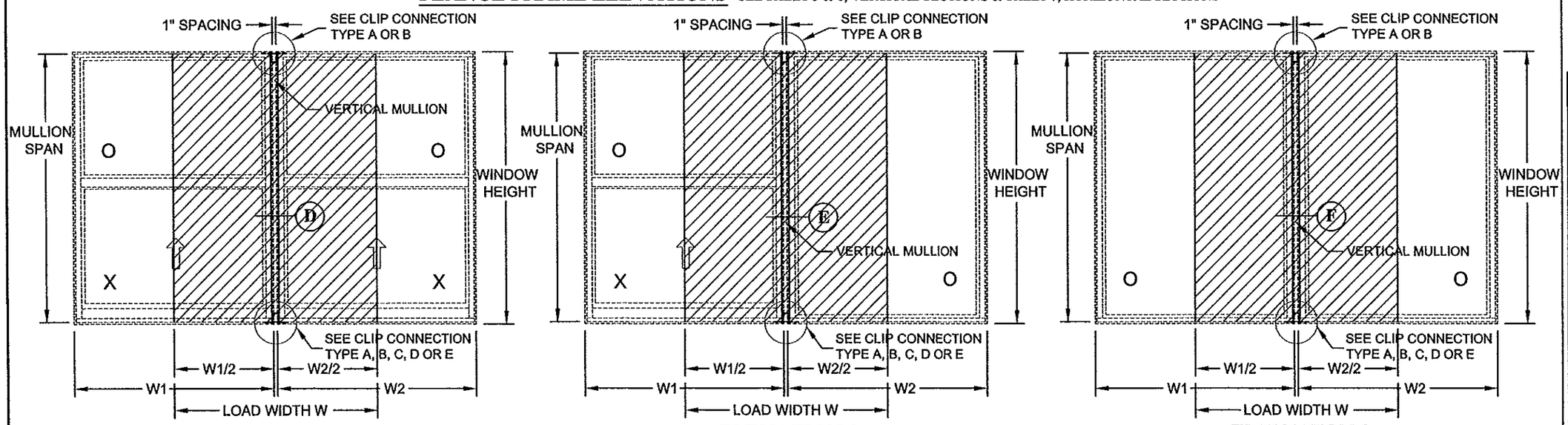


ELEVATION 1 ELEVATION 2 ELEVATION 3

| SERIES 4000 SINGLE HUNG AND 3000 FIXED WINDOWS | | |
|---|---|---|
| MAXIMUM DIMENSIONS | EQUAL LEG FRAME | FLANGE FRAME |
| W1 | 53" | 54" |
| W2 | 53" | 54" |
| WINDOW HEIGHT | 72" | 73" |
| MULLION SPAN | 72" | 72" |

AVERAGE LOAD WIDTH - EQUAL LEG; W = (W1 + W2) / 2 + 2"
- FLANGE; W = (W1+W2) / 2 + 1"

**NOTES:**

1- ELEVATIONS ARE VIEWED FROM EXTERIOR.
2- SCREENS ARE NOT SHOWN FOR CLARITY.
3- ALL DIMENSIONS ARE IN INCHES.
4- ALL MULLIONS SHALL BE 6063-T6 ALUMINUM.
5- W: AVERAGE LOAD WIDTH
6- MULLION SPAN IS THE SAME AS WINDOW HEIGHT FOR THE EQUAL LEG FRAME AND IS 1" SHORTER FOR THE FLANGE FRAME.

PRODUCT REVISED
as complying with the Florida Building Code
Acceptance No 14-1014.05
Expiration Date Oct 4, 2019
By Manuel Diaz
Miami Dade Product Control

REVISIONS

| SHEET | REV | DESCRIPTION | DATE | BY |
|---|---|---|---|---|
| 2 | B | UPDATE TO 5TH EDITION FBC (2014) | | |
| 2 | A | UPDATE TO 2010 FBC | | |

This drawing and all associated component files are the sole property of WinDoor, Inc. and contains confidential, privileged and patented information. Any reproduction of this drawing is not permitted without written approval from WinDoor, Inc. management.

Robert J. Amoruso, P.E.
FL License No. 49752

ROBERT JAMES AMORUSO LICENSE No 49752 STATE OF FLORIDA PROFESSIONAL ENGINEER
8/29/14

PTC Product Design Group, LLC
PO Box 520775
Longwood, FL 32752-0775
321-690-1788 (P) 321-690-1789 (F)
FBPE Cert. of Auth. No. 25935

WINDOOR INCORPORATED
7500 AMSTERDAM DRIVE
ORLANDO, FL 32832
Phone: 407.481.8400
Fax: 407.481.0505
www.windoorinc.com

DRAWING TITLE:
SERIES 3000 /4000 IMPACT MULLION (LMI & SMI)
ELEVATION DETAILS

| SIZE | DRAWN BY: | DWG NO. | REV |
|---|---|---|---|
| . | JBH | FEI0009 | B |
| SCALE NTS | DATE: 07/22/11 | SHEET 2OF11 | |

## ① TUBE MULLION 2 X 4
PART No. FE5717

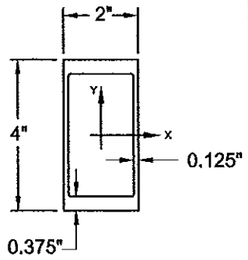


SECTION PROPERTIES:

AREA: 2.316 in²
Ix : 5.669 in4
SX: 2.835 in³

## ② EXT MULLION CLIP
PART No. FE5708-1

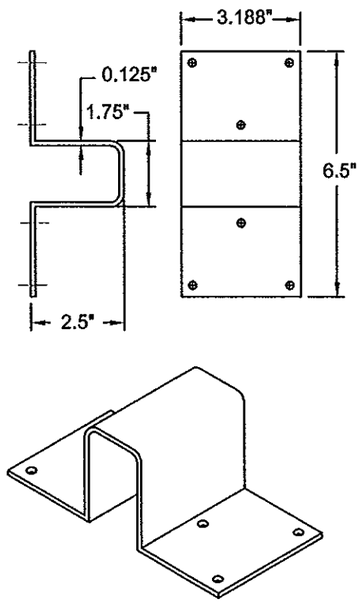


## ③ SILL MULLION CLIP
PART No. FE5708-2

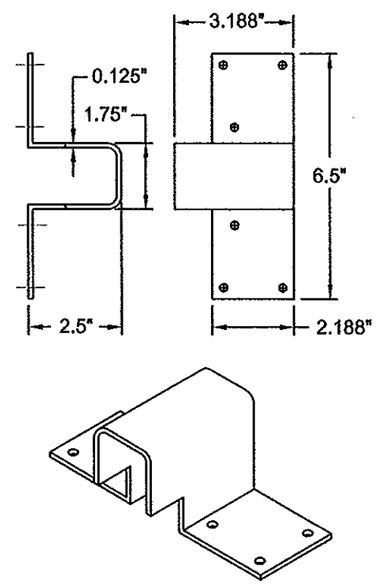


## ④ EXT MULLION CLIP
PART No. FE5708-4

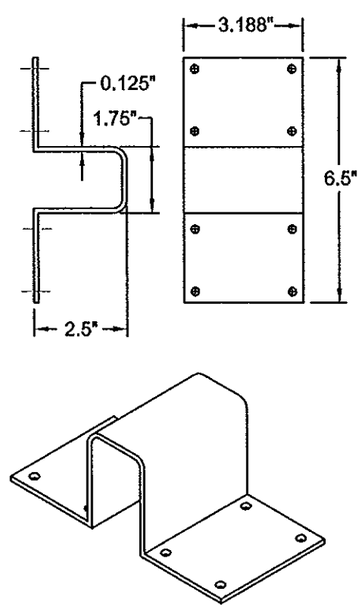


## ⑤ SILL MULLION CLIP
PART No. FE5708-5

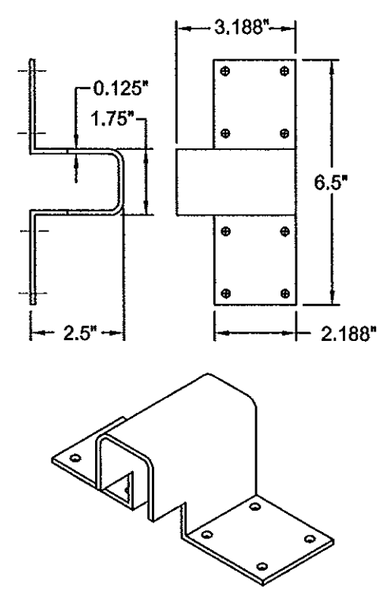


**NOTE:**
ALL DIMENSIONS ARE IN INCHES.

### BILL OF MATERIALS

| ITEM # | PART DESCRIPTION | PART # OR DWG NO. | MATERIAL |
|---|---|---|---|
| 1 | TUBE MULLION 2 x 4 | FE 5717 | ALUM. EXTRUSION (6063-T6) |
| 2 | EXT MULLION CLIP (6 Anchor Holes) | FE 5708-1 | ALUM. EXTRUSION (6063-T6) |
| 3 | SILL MULLION CLIP (6 Anchor Holes) | FE 5708-2 | ALUM. EXTRUSION (6063-T6) |
| 4 | EXT MULLION CLIP (8 Anchor Holes) | FE 5708-4 | ALUM. EXTRUSION (6063-T6) |
| 5 | SILL MULLION CLIP (8 Anchor Holes) | FE 5708-5 | ALUM. EXTRUSION (6063-T6) |

REVISIONS

| SHEET | REV | DESCRIPTION | DATE | BY |
|---|---|---|---|---|
| 1 | B | UPDATE TO 5TH EDITION FBC (2014) | | |
| 1 | A | UPDATE TO 2010 FBC | | |

This drawing and all associated component files are the sole property of WinDoor, Inc. and contains confidential, privileged and patented information. Any reproduction of this drawing is not permitted without written approval from WinDoor, Inc. management.

Robert J. Amoruso, P.E.
FL License No. 49752

ROBERT JAMES AMORUSO
LICENSE
No 49752
STATE OF FLORIDA
PROFESSIONAL ENGINEER
9/29/14

PRODUCT REVISED
as complying with the Florida Building Code
Acceptance No 14-1014.05
Expiration Date Oct. 14, 2019
By Miami-Dade Product Control

PTC Product Design Group, LLC
PO Box 520775
Longwood, FL 32752-0775
321-690-1788 (P) 321-690-1789 (F)
FBPE Cert. of Auth. No. 25935

WINDOOR INCORPORATED
7500 AMSTERDAM DRIVE
ORLANDO, FL 32832
Phone: 407.481.8400
Fax: 407.481.0505
www.windoorinc.com

DRAWING TITLE:
SERIES 3000/ 4000 IMPACT MULLION (LMI & SMI)
BILL OF MATERIAL AND COMPONENTS

| SIZE | DRAWN BY: | DWG NO. | REV |
|---|---|---|---|
| | JBH | FEI0009 | B |

| SCALE | DATE: | SHEET |
|---|---|---|
| NTS | 07/22/11 | 3OF11 |

# EQUAL LEG FRAME VERTICAL SECTIONS

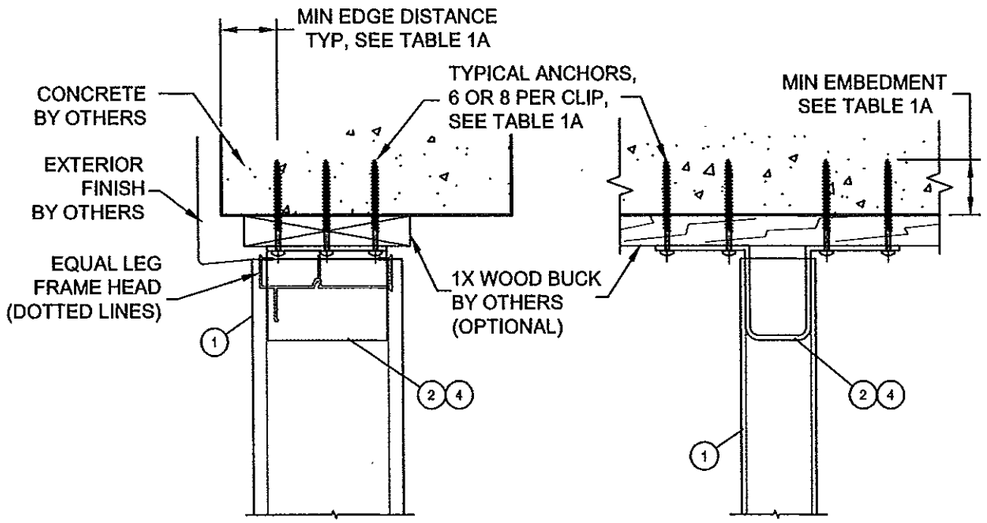


**SIDE VIEW** **FRONT VIEW**

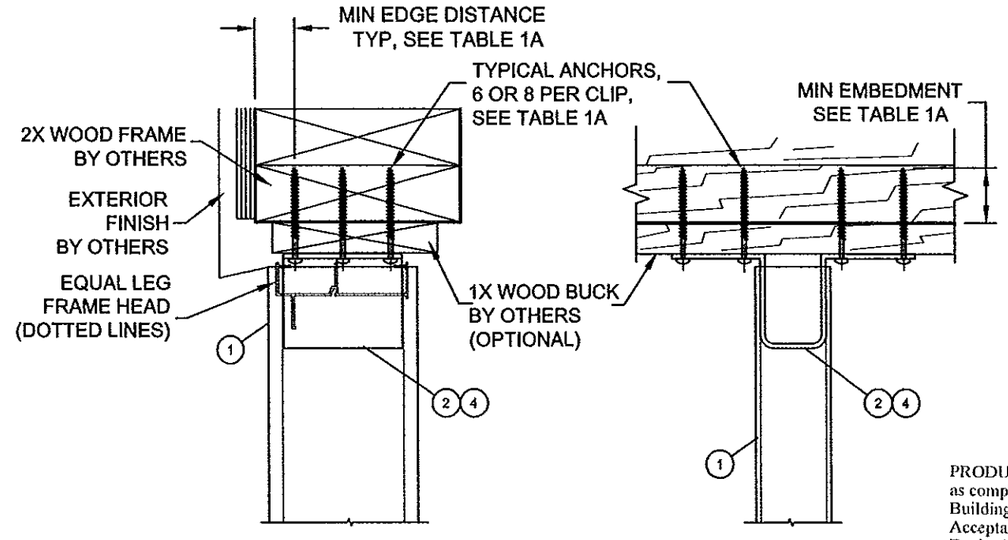


**SIDE VIEW** **FRONT VIEW**

PRODUCT REVISED
as complying with the Florida
Building Code
Acceptance No 14-1014.05
Expiration Date Oct. 14, 2019
By Manuel Perez
Miami Dade Product Control

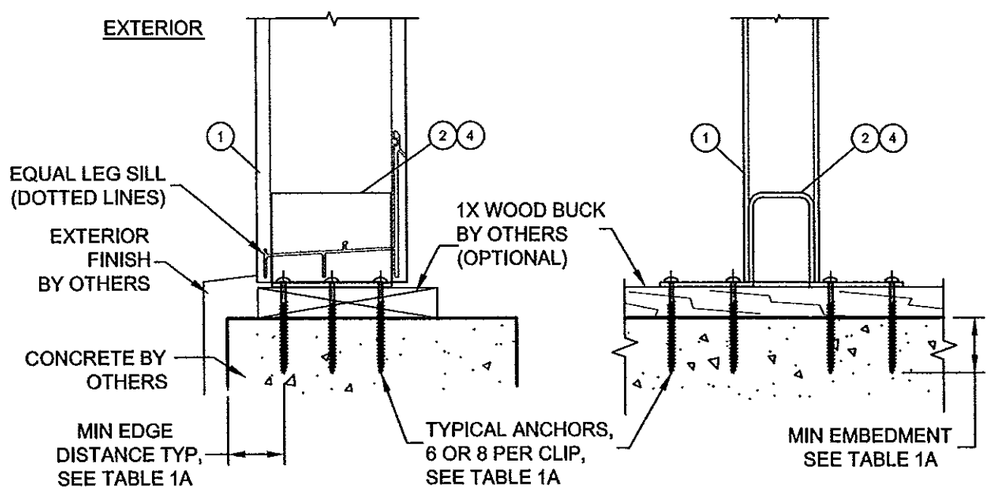


## ANCHOR TYPE 'A' (HEAD & SILL)

MULLION CLIP ANCHORS THRU WOOD BUCKS
INTO CONCRETE SUBSTRATE FOR EQUAL LEG
FRAME (6 ANCHOR CLIP SHOWN)

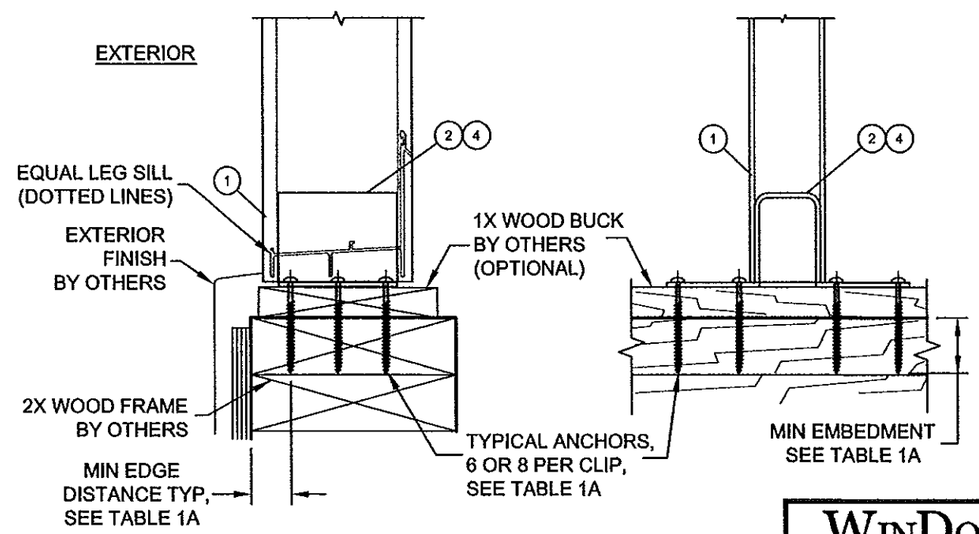


## ANCHOR TYPE 'B' (HEAD & SILL)

MULLION CLIP ANCHORS THRU WOOD BUCKS
INTO WOOD FRAME SUBSTRATE FOR EQUAL
LEG FRAME (6 ANCHOR CLIP SHOWN)

| SHEET | REV | DESCRIPTION | DATE | BY |
|---|---|---|---|---|
| 1 | B | UPDATE TO 5TH EDITION FBC (2014) | | |
| 1 | A | UPDATE TO 2010 FBC | | |

REVISIONS

This drawing and all associated component files are the sole property of WinDoor, Inc. and contains confidential, privileged and patented information. Any reproduction of this drawing is not permitted without written approval from WinDoor, Inc. management.

Robert J. Amoruso, P.E.
FL License No. 49752

ROBERT JAMES AMORUSO
LICENSE
No 49752
9/29/14
STATE OF
FLORIDA
PROFESSIONAL ENGINEER

PTC Product Design Group, LLC
PO Box 520775
Longwood, FL 32752-0775
321-690-1788 (P) 321-690-1789 (F)
FBPE Cert. of Auth. No. 25935

WINDOOR INCORPORATED
7500 AMSTERDAM DRIVE
ORLANDO, FL 32832
Phone: 407.481.8400
Fax: 407.481.0505
www.windoorinc.com

DRAWING TITLE:
SERIES 3000/ 4000 IMPACT MULLION ( LMI & SMI)
EQUAL LEG VERTICAL SECTIONS

| SIZE | DRAWN BY: | DWG NO. | REV |
|---|---|---|---|
| . | JBH | FEI0009 | B |
| SCALE NTS | DATE: 07/22/11 | SHEET 4OF11 | |

# FLANGE FRAME VERTICAL SECTIONS

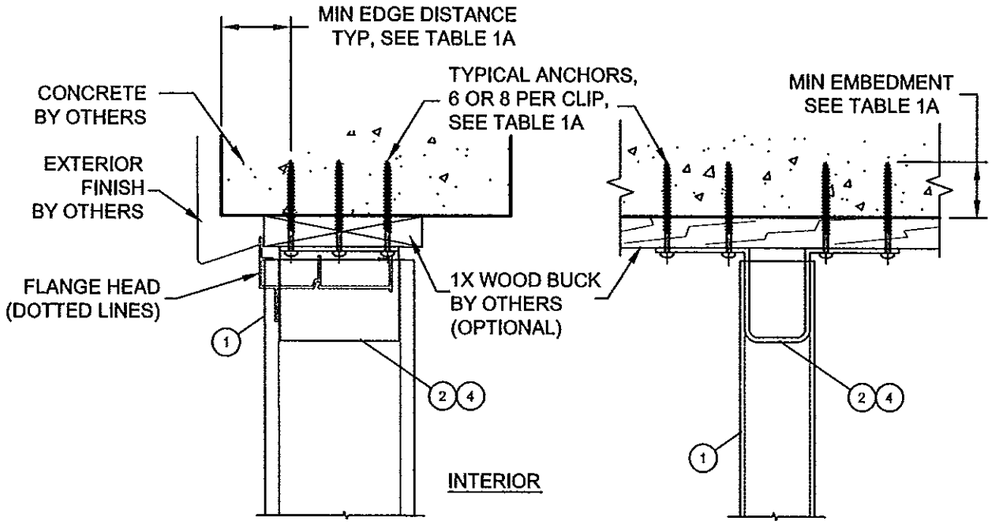


SIDE VIEW

FRONT VIEW

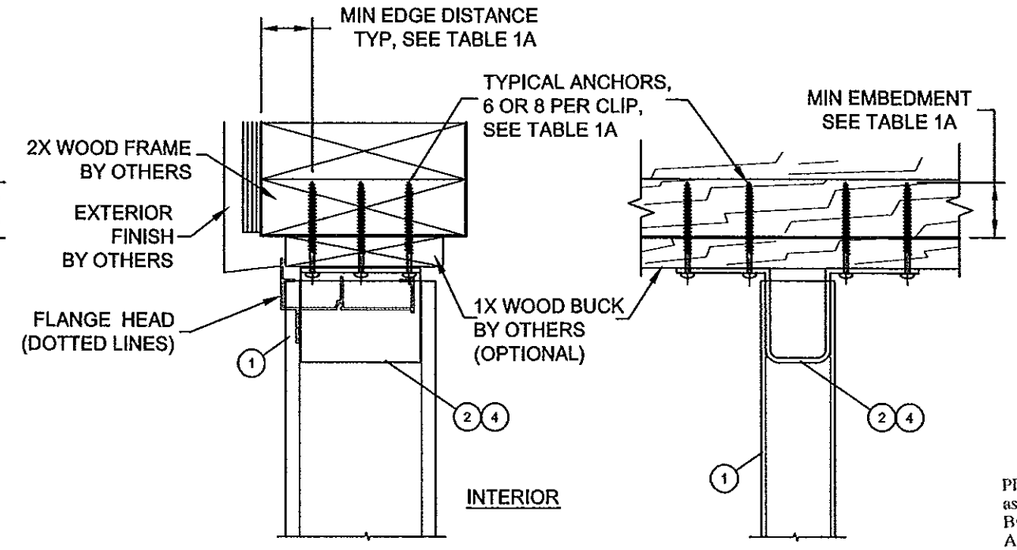


SIDE VIEW

FRONT VIEW

PRODUCT REVISED
as complying with the Florida
Building Code
Acceptance No 14-1014.05
Expiration Date 02.14.2019
By Manuel Fos
Miami Dade Product Control

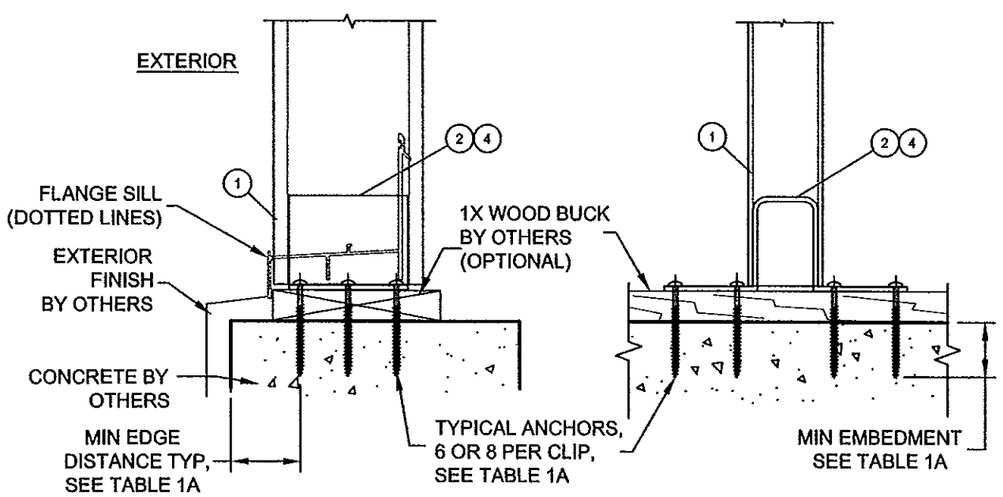


## ANCHOR TYPE 'A' (HEAD & SILL)

MULLION CLIP ANCHORS THRU WOOD BUCKS INTO CONCRETE SUBSTRATE FOR FLANGE FRAME (6 ANCHOR CLIP SHOWN)

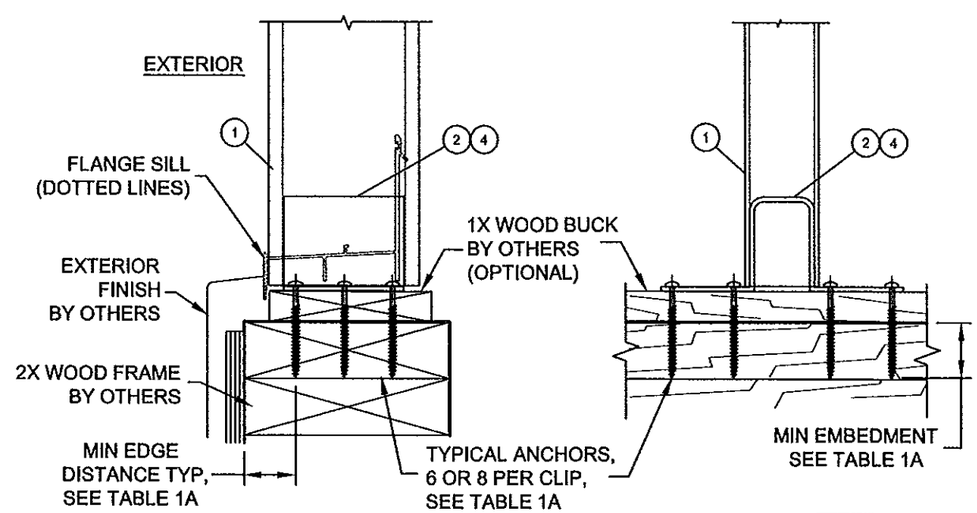


## ANCHOR TYPE 'B' (HEAD & SILL)

MULLION CLIP ANCHORS THRU WOOD BUCKS INTO WOOD FRAME SUBSTRATE FOR FLANGE FRAME (6 ANCHOR CLIP SHOWN)

REVISIONS

| SHEET | REV | DESCRIPTION | DATE | BY |
|---|---|---|---|---|
| 1 | B | UPDATE TO 5TH EDITION FBC (2014) | | |
| 1 | A | UPDATE TO 2010 FBC | | |

This drawing and all associated component files are the sole property of WinDoor, Inc. and contains confidential, privileged and patented information. Any reproduction of this drawing is not permitted without written approval from WinDoor, Inc. management.

Robert J. Amoruso, P.E.
FL License No. 49752

ROBERT JAMES AMORUSO
LICENSE
No 49752
9/29/14
STATE OF FLORIDA
PROFESSIONAL ENGINEER

PTC Product Design Group, LLC
PO Box 520775
Longwood, FL 32752-0775
321-690-1788 (P) 321-690-1789 (F)
FBPE Cert. of Auth. No. 25935

WINDOOR INCORPORATED
7500 AMSTERDAM DRIVE
ORLANDO, FL 32832
Phone: 407.481.8400
Fax: 407.481.0505
www.windoorinc.com

DRAWING TITLE:
SERIES 3000/ 4000 IMPACT MULLION (LMI & SMI)
FLANGE VERTICAL SECTIONS

| SIZE | DRAWN BY: | DWG NO. | REV |
|---|---|---|---|
| . | JBH | FEI0009 | B |
| SCALE NTS | DATE: 07/22/11 | SHEET 5OF11 | |

# FLANGE FRAME VERTICAL SECTIONS

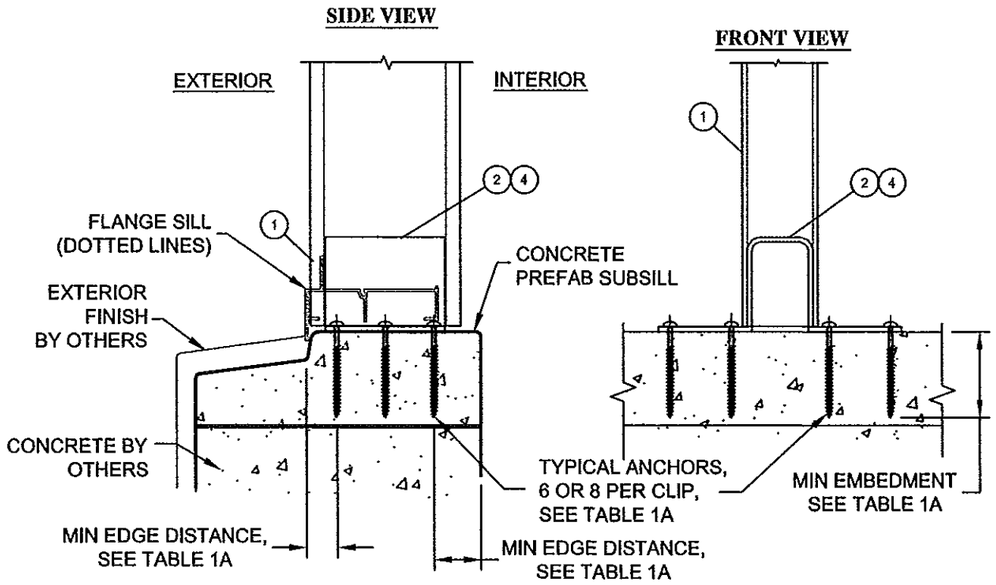


## ANCHOR TYPE 'C' (SILL)

MULLION CLIP ANCHORS INTO PREFAB CONCRETE SUBSILL FOR FLANGE FRAME (6 ANCHOR CLIP SHOWN)

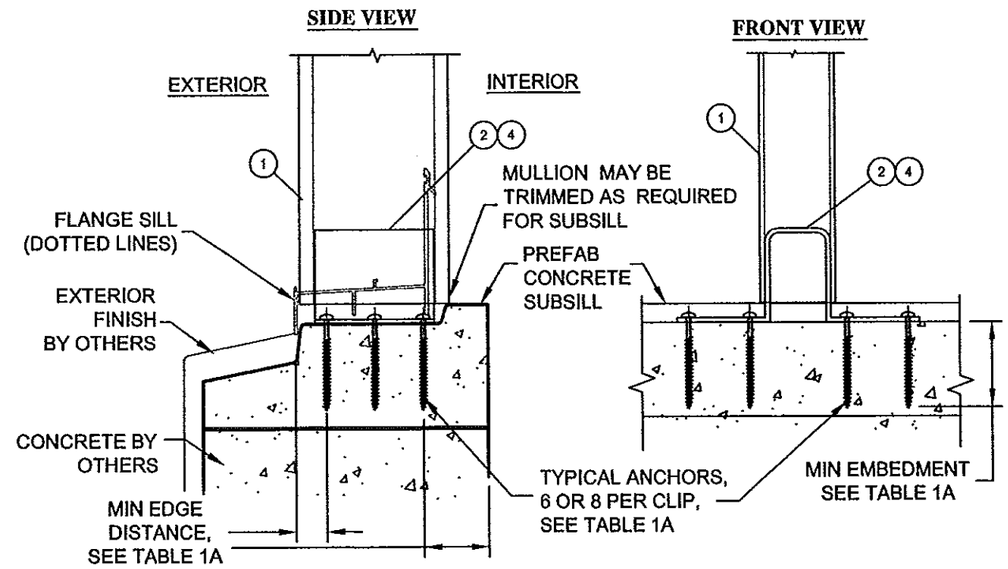


## ANCHOR TYPE 'D' (SILL)

MULLION CLIP ANCHORS INTO PREFAB CONCRETE SUBSILL FOR FLANGE FRAME (6 ANCHOR CLIP SHOWN)

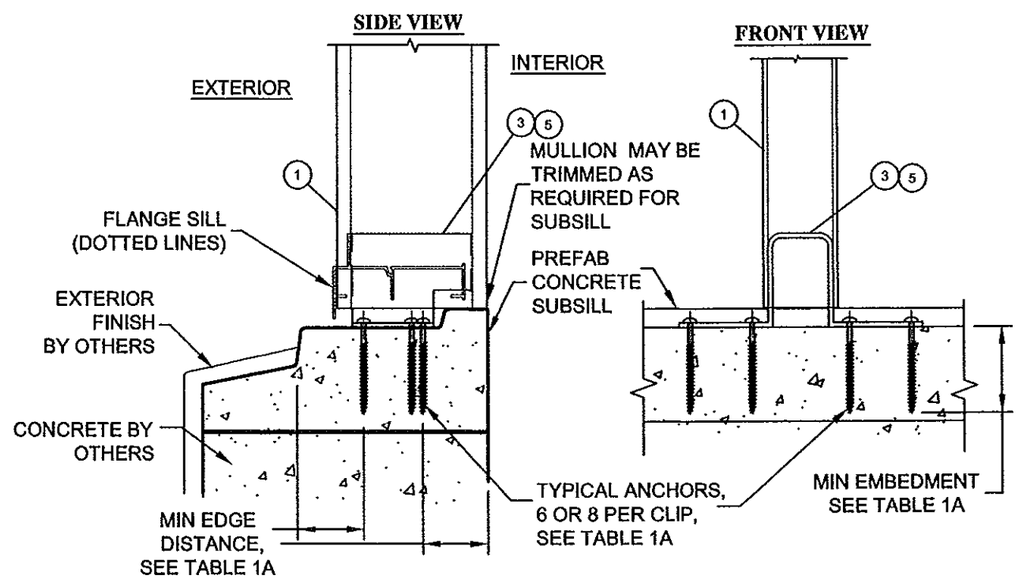


## ANCHOR TYPE 'E' (SILL)

MULLION CLIP ANCHORS INTO PREFAB CONCRETE SUBSILL FOR FLANGE FRAME (6 ANCHOR CLIP SHOWN)

REVISIONS

| SHEET | REV | DESCRIPTION | DATE | BY |
|---|---|---|---|---|
| 1 | B | UPDATE TO 5TH EDITION FBC (2014) | | |
| 1 | A | UPDATE TO 2010 FBC | | |

This drawing and all associated component files are the sole property of WinDoor, Inc. and contains confidential, privileged and patented information. Any reproduction of this drawing is not permitted without written approval from WinDoor, Inc. management.

PRODUCT REVISED
as complying with the Florida Building Code
Acceptance No 14-1014.05
Expiration Date Oct.14,2019
By Manuel Sera
Miami Dade Product Control

Robert J. Amoruso, P.E.
FL License No. 49752

ROBERT JAMES AMORUSO LICENSE No 49752 STATE OF FLORIDA PROFESSIONAL ENGINEER 9/29/14

PTC Product Design Group, LLC
PO Box 520775
Longwood, FL 32752-0775
321-690-1788 (P) 321-690-1789 (F)
FBPE Cert. of Auth. No. 25935

WINDOOR INCORPORATED
7500 AMSTERDAM DRIVE
ORLANDO, FL 32832
Phone: 407.481.8400
Fax: 407.481.0505
www.windoorinc.com

DRAWING TITLE:
SERIES 3000/ 4000 IMPACT MULLION (LMI & SMI)
FLANGE VERTICAL SECTIONS

| SIZE | DRAWN BY: | DWG NO. | REV |
|---|---|---|---|
| . | JBH | FEI0009 | B |
| SCALE NTS | DATE: 07/22/11 | SHEET 6OF11 | |

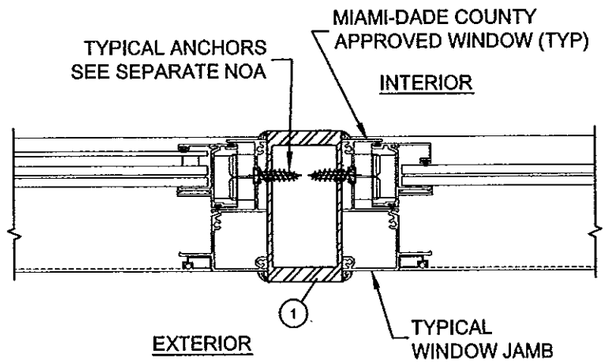


**A HORIZONTAL SECTION**
2x4 ALUMINUM TUBE MULLION
WITH EQUAL LEG FRAME
(SINGLE HUNG / SINGLE HUNG)

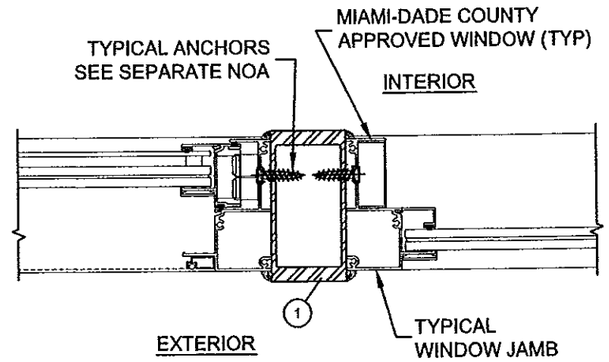


**B HORIZONTAL SECTION**
2x4 ALUMINUM TUBE MULLION
WITH EQUAL LEG FRAME
(SINGLE HUNG / FIXED)

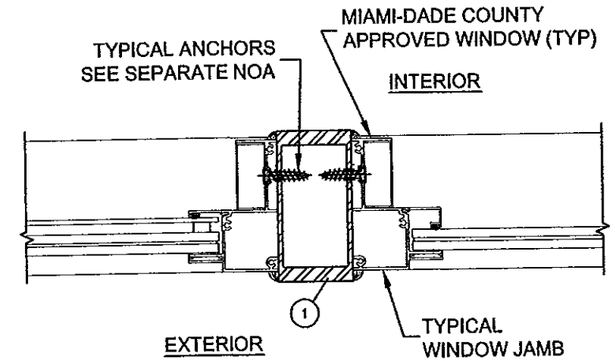


**C HORIZONTAL SECTION**
2x4 ALUMINUM TUBE MULLION
WITH EQUAL LEG FRAME
(FIXED / FIXED)

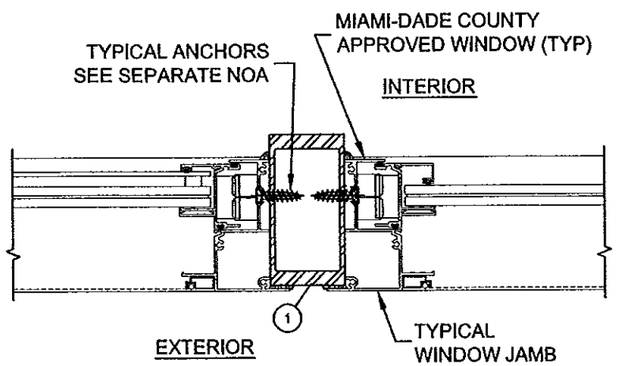


**D HORIZONTAL SECTION**
2x4 ALUMINUM TUBE MULLION
WITH FLANGE FRAME
(SINGLE HUNG / SINGLE HUNG)

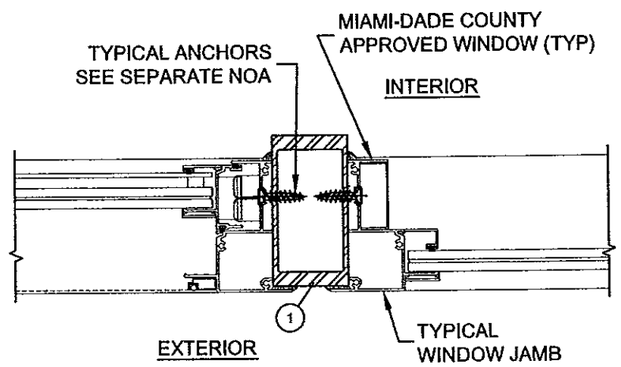


**E HORIZONTAL SECTION**
2x4 ALUMINUM TUBE MULLION
WITH FLANGE FRAME
(SINGLE HUNG / FIXED)

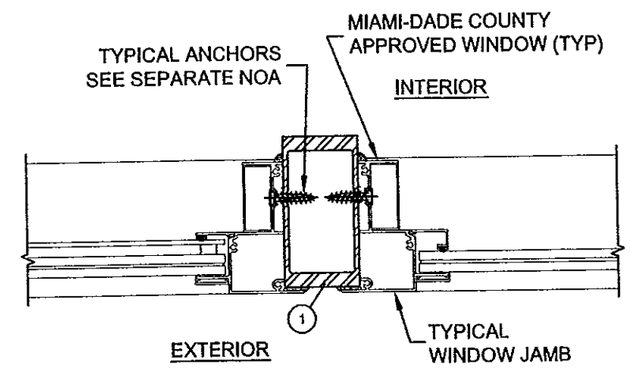


**F HORIZONTAL SECTION**
2x4 ALUMINUM TUBE MULLION
WITH FLANGE FRAME
(FIXED / FIXED)

| REVISIONS | | | |
|---|---|---|---|
| SHEET | REV | DESCRIPTION | DATE | BY |
| 1 | B | UPDATE TO 5TH EDITION FBC (2014) | | |
| 1 | A | UPDATE TO 2010 FBC | | |

This drawing and all associated component files are the sole property of WinDoor, Inc. and contains confidential, privileged and patented information. Any reproduction of this drawing is not permitted without written approval from WinDoor, Inc. management.

Robert J. Amoruso, P.E.
FL License No. 49752

ROBERT JAMES AMORUSO
LICENSE
No 49752
9/29/14
STATE OF FLORIDA
PROFESSIONAL ENGINEER

PTC Product Design Group, LLC
PO Box 520775
Longwood, FL 32752-0775
321-690-1788 (P) 321-690-1789 (F)
FBPE Cert. of Auth. No. 25935

PRODUCT REVISED
as complying with the Florida
Building Code
Acceptance No 14-1014.05
Expiration Date Oct. 14, 2019
By Manuel Inez
Miami Dade Product Control

WINDOOR INCORPORATED
7500 AMSTERDAM DRIVE
ORLANDO, FL 32832
Phone: 407.481.8400
Fax: 407.481.0505
www.windoorinc.com

DRAWING TITLE:
SERIES 3000/ 4000 IMPACT MULLION (LMI & SMI)
HORIZONTAL SECTIONS

| SIZE | DRAWN BY: | DWG NO. | REV |
|---|---|---|---|
| . | JBH | FEI0009 | B |
| SCALE NTS | DATE: 07/22/11 | SHEET 7OF11 | |

## Table 1A - Anchor Schedule

| Substrate | Minimum concrete strength (psi) | Anchor type | Size | Manufacturer or spec | Minimum embedment | Minimum edge distance | Comments |
|---|---|---|---|---|---|---|---|
| CONCRETE | 3000 psi | Concrete screw - carbon steel | 3/16" | ITW/Buildex TAPCON with Advanced Threadform Technology (MD NOA No. 12-0816.06) | 1 3/4" | 1 1/8" | See Table 2A for performance ratings |
| WOOD FRAME | NA | Wood screw - carbon steel or stainless steel | #10 | ANSI B18.6.1 | 1 7/16" | 1" | See Table 3A for performance ratings |
| | NA | Tapping screw - carbon steel or stainless steel | #10 | ASME B18.6.4, Type AB | 1 7/16" | 1" | See Table 3B for performance ratings |

**Table 1A Notes:**
1) Other manufacturer's concrete screws may be acceptable if they meet or exceed the allowable shear values of those in Table 1B, are installed at a minimum embedment required for that allowable and the installation meets the edge distance and spacing requirements for the anchor at the prescribed shear value.
2) Allowable shear values (lbs) used in the analysis for the concrete anchorage is listed in Table 1B. Values shown are an average of the total quantity of screws and the shear allowable per screw used on the clip (either 6 or 8) accounting for spacing and edge distance reduction in capacities.
3) To prevent 1X bucking or 2X bucking or framing from splitting, drill 3/32" diameter holes in wood to accommodate anchors.
4) All screws are flat head.
5) Screw lengths will be sufficient to allow the minimum embedment to be made into the receiving substrate. Where 1X bucks are used, they shall not be considered part of the substrate regardless of their attachment to the structural substrate.

## Table 1B - Concrete Screw Shear Allowable Used (per screw)

| Substrate | Minimum concrete strength (psi) | Anchor type | Size | Manufacturer or spec | Clip ID | Quantity of anchors | Allowable shear (lbs) |
|---|---|---|---|---|---|---|---|
| Concrete | 3000 psi | Concrete screw - carbon steel | 3/16" | ITW/Buildex TAPCON with Advanced Threadform Technology (MD NOA No. 12-0816.06) | FE5708-1 | 6 | 209 |
| | | | | | FE5708-2 | 6 | 196 |
| | | | | | FE5708-4 | 8 | 208 |
| | | | | | FE5708-5 | 8 | 202 |

**Table 1B Notes:**
Values above are an average of the total quantity of screws and the shear allowable per screw used on the clip (either 6 or 8) accounting for spacing and edge distance reduction in capacities.

PRODUCT REVISED
as complying with the Florida
Building Code
Acceptance No 14-1014.05
Expiration Date Oct. 14, 2019
By Manuel Perez
Miami-Dade Product Control

REVISIONS

| SHEET | REV | DESCRIPTION | DATE | BY |
|---|---|---|---|---|
| 1 | B | UPDATE TO 5TH EDITION FBC (2014) | | |
| 1 | A | UPDATE TO 2010 FBC | | |

This drawing and all associated component files are the sole property of WinDoor, Inc. and contains confidential, privileged and patented information. Any reproduction of this drawing is not permitted without written approval from WinDoor, Inc. management.

Robert J. Amoruso, P.E.
FL License No. 49752

ROBERT JAMES AMORUSO
LICENSE
No 49752
STATE OF FLORIDA
PROFESSIONAL ENGINEER
9/29/14

PTC Product Design Group, LLC
PO Box 520775
Longwood, FL 32752-0775
321-690-1788 (P) 321-690-1789 (F)
FBPE Cert. of Auth. No. 25935

WINDOOR INCORPORATED
7500 AMSTERDAM DRIVE
ORLANDO, FL 32832
Phone: 407.481.8400
Fax: 407.481.0505
www.windoorinc.com

DRAWING TITLE:
SERIES 3000/ 4000 IMPACT MULLION (LMI & SMI)
ANCHOR SCHEDULE

| SIZE | DRAWN BY: | DWG NO. | REV |
|---|---|---|---|
| . | JBH | FEI0009 | B |

| SCALE | DATE: | SHEET |
|---|---|---|
| NTS | 07/22/11 | 8OF11 |

## TABLE 2A - MULLION AND CLIP ANCHORAGE PERFORMANCE RATINGS in Concrete

For Concrete (3000 psi) installations use performance ratings (psf) below.
Design Pressures (psf) when using ITW/Buildex Tapcon Advanced Threadform Technology 3/16" Diameter Concrete Screw

| Load width W (in) | Mullion Span (in) | | | | | | | | | | | | | | | | | | | |
|---|---|---|---|---|---|---|---|---|---|---|---|---|---|---|---|---|---|---|---|---|
| | 73 | | | | 72 | | | | 62 | | | | 55 | | | | 49 | | | |
| | Ext. Clip | | Sill Clip | | Ext. Clip | | Sill Clip | | Ext. Clip | | Sill Clip | | Ext. Clip | | Sill Clip | | Ext. Clip | | Sill Clip | |
| | FE5708-1 | FE5708-4 | FE5708-2 | FE5708-5 | FE5708-1 | FE5708-4 | FE5708-2 | FE5708-5 | FE5708-1 | FE5708-4 | FE5708-2 | FE5708-5 | FE5708-1 | FE5708-4 | FE5708-2 | FE5708-5 | FE5708-1 | FE5708-4 | FE5708-2 | FE5708-5 |
| 19 | 135 | 135 | 135 | 135 | 135 | 135 | 135 | 135 | 135 | 135 | 135 | 135 | 135 | 135 | 135 | 135 | 135 | 135 | 135 | 135 |
| 21 | 135 | 135 | 135 | 135 | 135 | 135 | 135 | 135 | 135 | 135 | 135 | 135 | 135 | 135 | 135 | 135 | 135 | 135 | 135 | 135 |
| 23 | 135 | 135 | 135 | 135 | 135 | 135 | 135 | 135 | 135 | 135 | 135 | 135 | 135 | 135 | 135 | 135 | 135 | 135 | 135 | 135 |
| 25 | 135 | 135 | 135 | 135 | 135 | 135 | 135 | 135 | 135 | 135 | 135 | 135 | 135 | 135 | 135 | 135 | 135 | 135 | 135 | 135 |
| 27 | 135 | 135 | 135 | 135 | 135 | 135 | 135 | 135 | 135 | 135 | 135 | 135 | 135 | 135 | 135 | 135 | 135 | 135 | 135 | 135 |
| 29 | 135 | 135 | 135 | 135 | 135 | 135 | 135 | 135 | 135 | 135 | 135 | 135 | 135 | 135 | 135 | 135 | 135 | 135 | 135 | 135 |
| 31 | 135 | 135 | 135 | 135 | 135 | 135 | 135 | 135 | 135 | 135 | 135 | 135 | 135 | 135 | 135 | 135 | 135 | 135 | 135 | 135 |
| 33 | 135 | 135 | 135 | 135 | 135 | 135 | 135 | 135 | 135 | 135 | 135 | 135 | 135 | 135 | 135 | 135 | 135 | 135 | 135 | 135 |
| 35 | 135 | 135 | 135 | 135 | 135 | 135 | 135 | 135 | 135 | 135 | 135 | 135 | 135 | 135 | 135 | 135 | 135 | 135 | 135 | 135 |
| 37 | 135 | 135 | 129 | 135 | 135 | 135 | 131 | 135 | 135 | 135 | 135 | 135 | 135 | 135 | 135 | 135 | 135 | 135 | 135 | 135 |
| 39 | 130 | 135 | 122 | 135 | 132 | 135 | 124 | 135 | 135 | 135 | 135 | 135 | 135 | 135 | 135 | 135 | 135 | 135 | 135 | 135 |
| 41 | 124 | 135 | 116 | 135 | 125 | 135 | 118 | 135 | 135 | 135 | 135 | 135 | 135 | 135 | 135 | 135 | 135 | 135 | 135 | 135 |
| 43 | 118 | 135 | 110 | 135 | 119 | 135 | 112 | 135 | 135 | 135 | 130 | 135 | 135 | 135 | 135 | 135 | 135 | 135 | 135 | 135 |
| 45 | 112 | 135 | 105 | 135 | 114 | 135 | 107 | 135 | 132 | 135 | 124 | 135 | 135 | 135 | 135 | 135 | 135 | 135 | 135 | 135 |
| 47 | 108 | 135 | 101 | 133 | 109 | 135 | 102 | 135 | 127 | 135 | 119 | 135 | 135 | 135 | 134 | 135 | 135 | 135 | 135 | 135 |
| 49 | 103 | 135 | 97 | 127 | 105 | 135 | 98 | 129 | 121 | 135 | 114 | 135 | 135 | 135 | 128 | 135 | 135 | 135 | 135 | 135 |
| 51 | 99 | 131 | 93 | 122 | 100 | 133 | 94 | 124 | 117 | 135 | 109 | 135 | 131 | 135 | 123 | 135 | 135 | 135 | 135 | 135 |
| 53 | 95 | 126 | 89 | 118 | 96 | 128 | 90 | 119 | 112 | 135 | 105 | 135 | 126 | 135 | 118 | 135 | 135 | 135 | 133 | 135 |
| 54 | 93 | 124 | 88 | 115 | 95 | 126 | 89 | 117 | 110 | 135 | 103 | 135 | 124 | 135 | 116 | 135 | 135 | 135 | 130 | 135 |
| 55 | 92 | 122 | 86 | 113 | 93 | 123 | 87 | 115 | 108 | 135 | 101 | 133 | 122 | 135 | 114 | 135 | 135 | 135 | 128 | 135 |

**NOTE:**
DESIGN PRESSURES SHOWN IN TABLE 2A ARE POSITIVE AND NEGATIVE (+/-).

## TABLE 2A - MULLION AND CLIP ANCHORAGE PERFORMANCE RATINGS in Concrete

For Concrete (3000 psi) installations use performance ratings (psf) below.
Design Pressures (psf) when using ITW/Buildex Tapcon Advanced Threadform Technology 3/16" Diameter Concrete Screw

| Load width W (in) | Mullion Span (in) | | | | | | | | | | | | | | | | | | | |
|---|---|---|---|---|---|---|---|---|---|---|---|---|---|---|---|---|---|---|---|---|
| | 43 | | | | 40 | | | | 37 | | | | 31 | | | | 25 | | | |
| | Ext. Clip | | Sill Clip | | Ext. Clip | | Sill Clip | | Ext. Clip | | Sill Clip | | Ext. Clip | | Sill Clip | | Ext. Clip | | Sill Clip | |
| | FE5708-1 | FE5708-4 | FE5708-2 | FE5708-5 | FE5708-1 | FE5708-4 | FE5708-2 | FE5708-5 | FE5708-1 | FE5708-4 | FE5708-2 | FE5708-5 | FE5708-1 | FE5708-4 | FE5708-2 | FE5708-5 | FE5708-1 | FE5708-4 | FE5708-2 | FE5708-5 |
| 19 | 135 | 135 | 135 | 135 | 135 | 135 | 135 | 135 | 135 | 135 | 135 | 135 | 135 | 135 | 135 | 135 | 135 | 135 | 135 | 135 |
| 21 | 135 | 135 | 135 | 135 | 135 | 135 | 135 | 135 | 135 | 135 | 135 | 135 | 135 | 135 | 135 | 135 | 135 | 135 | 135 | 135 |
| 23 | 135 | 135 | 135 | 135 | 135 | 135 | 135 | 135 | 135 | 135 | 135 | 135 | 135 | 135 | 135 | 135 | 135 | 135 | 135 | 135 |
| 25 | 135 | 135 | 135 | 135 | 135 | 135 | 135 | 135 | 135 | 135 | 135 | 135 | 135 | 135 | 135 | 135 | 135 | 135 | 135 | 135 |
| 27 | 135 | 135 | 135 | 135 | 135 | 135 | 135 | 135 | 135 | 135 | 135 | 135 | 135 | 135 | 135 | 135 | 135 | 135 | 135 | 135 |
| 29 | 135 | 135 | 135 | 135 | 135 | 135 | 135 | 135 | 135 | 135 | 135 | 135 | 135 | 135 | 135 | 135 | 135 | 135 | 135 | 135 |
| 31 | 135 | 135 | 135 | 135 | 135 | 135 | 135 | 135 | 135 | 135 | 135 | 135 | 135 | 135 | 135 | 135 | 135 | 135 | 135 | 135 |
| 33 | 135 | 135 | 135 | 135 | 135 | 135 | 135 | 135 | 135 | 135 | 135 | 135 | 135 | 135 | 135 | 135 | 135 | 135 | 135 | 135 |
| 35 | 135 | 135 | 135 | 135 | 135 | 135 | 135 | 135 | 135 | 135 | 135 | 135 | 135 | 135 | 135 | 135 | 135 | 135 | 135 | 135 |
| 37 | 135 | 135 | 135 | 135 | 135 | 135 | 135 | 135 | 135 | 135 | 135 | 135 | 135 | 135 | 135 | 135 | 135 | 135 | 135 | 135 |
| 39 | 135 | 135 | 135 | 135 | 135 | 135 | 135 | 135 | 135 | 135 | 135 | 135 | 135 | 135 | 135 | 135 | 135 | 135 | 135 | 135 |
| 41 | 135 | 135 | 135 | 135 | 135 | 135 | 135 | 135 | 135 | 135 | 135 | 135 | 135 | 135 | 135 | 135 | 135 | 135 | 135 | 135 |
| 43 | 135 | 135 | 135 | 135 | 135 | 135 | 135 | 135 | 135 | 135 | 135 | 135 | 135 | 135 | 135 | 135 | 135 | 135 | 135 | 135 |
| 45 | 135 | 135 | 135 | 135 | 135 | 135 | 135 | 135 | 135 | 135 | 135 | 135 | 135 | 135 | 135 | 135 | 135 | 135 | 135 | 135 |
| 47 | 135 | 135 | 135 | 135 | 135 | 135 | 135 | 135 | 135 | 135 | 135 | 135 | 135 | 135 | 135 | 135 | 135 | 135 | 135 | 135 |
| 49 | 135 | 135 | 135 | 135 | 135 | 135 | 135 | 135 | 135 | 135 | 135 | 135 | 135 | 135 | 135 | 135 | 135 | 135 | 135 | 135 |
| 51 | 135 | 135 | 135 | 135 | 135 | 135 | 135 | 135 | 135 | 135 | 135 | 135 | 135 | 135 | 135 | 135 | 135 | 135 | 135 | 135 |
| 53 | 135 | 135 | 135 | 135 | 135 | 135 | 135 | 135 | 135 | 135 | 135 | 135 | 135 | 135 | 135 | 135 | 135 | 135 | 135 | 135 |
| 54 | 135 | 135 | 135 | 135 | 135 | 135 | 135 | 135 | 135 | 135 | 135 | 135 | 135 | 135 | 135 | 135 | 135 | 135 | 135 | 135 |
| 55 | 135 | 135 | 135 | 135 | 135 | 135 | 135 | 135 | 135 | 135 | 135 | 135 | 135 | 135 | 135 | 135 | 135 | 135 | 135 | 135 |

PRODUCT REVISED
as complying with the Florida
Building Code
Acceptance No 14-1014.05
Expiration Date Oct. 14, 2019
By Manuel Perez
Miami Dade Product Control

REVISIONS

| SHEET | REV | DESCRIPTION | DATE | BY |
|---|---|---|---|---|
| 1 | B | UPDATE TO 5TH EDITION FBC (2014) | | |
| 1 | A | UPDATE TO 2010 FBC | | |

This drawing and all associated components files are the sole property of WinDoor, Inc. and contains confidential, privileged and patented information. Any reproduction of this drawing is not permitted without written approval from WinDoor, Inc. management.

Robert J. Amoruso, P.E.
FL License No. 49752

ROBERT JAMES AMORUSO
LICENSE
No 49752
9/29/14
STATE OF FLORIDA
PROFESSIONAL ENGINEER

PTC Product Design Group, LLC
PO Box 520775
Longwood, FL 32752-0775
321-690-1788 (P) 321-690-1789 (F)
FBPE Cert. of Auth. No. 25935

WINDOOR INCORPORATED
7500 AMSTERDAM DRIVE
ORLANDO, FL 32832
Phone: 407.481.8400
Fax: 407.481.0505
www.windoorinc.com

DRAWING TITLE:
SERIES 3000/ 4000 IMPACT MULLION (LMI & SMI)
CONCRETE DESIGN PRESSURE LIMITS

| SIZE | DRAWN BY: | DWG NO. | REV |
|---|---|---|---|
| SIZE | JBH | FEI0009 | B |

| SCALE | DATE: | SHEET |
|---|---|---|
| NTS | 07/22/11 | 9OF11 |

## TABLE 3A - MULLION AND CLIP ANCHORAGE PERFORMANCE RATINGS IN WOOD FRAMING

Design Pressures (psf) when using #10 wood Screws meeting ANSI B18.6.1

| Load width | Mullion Span (in) | | | | | | | | | | | | | | | | | | | |
|---|---|---|---|---|---|---|---|---|---|---|---|---|---|---|---|---|---|---|---|---|
| | 73 | | | | 72 | | | | 62 | | | | 55 | | | | 49 | | | |
| | Ext. Clip | | Sill Clip | | Ext. Clip | | Sill Clip | | Ext. Clip | | Sill Clip | | Ext. Clip | | Sill Clip | | Ext. Clip | | Sill Clip | |
| W (in) | FE5708-1 | FE5708-4 | FE5708-2 | FE5708-5 | FE5708-1 | FE5708-4 | FE5708-2 | FE5708-5 | FE5708-1 | FE5708-4 | FE5708-2 | FE5708-5 | FE5708-1 | FE5708-4 | FE5708-2 | FE5708-5 | FE5708-1 | FE5708-4 | FE5708-2 | FE5708-5 |
| 19 | 135 | 135 | 135 | 135 | 135 | 135 | 135 | 135 | 135 | 135 | 135 | 135 | 135 | 135 | 135 | 135 | 135 | 135 | 135 | 135 |
| 21 | 135 | 135 | 135 | 135 | 135 | 135 | 135 | 135 | 135 | 135 | 135 | 135 | 135 | 135 | 135 | 135 | 135 | 135 | 135 | 135 |
| 23 | 135 | 135 | 135 | 135 | 135 | 135 | 135 | 135 | 135 | 135 | 135 | 135 | 135 | 135 | 135 | 135 | 135 | 135 | 135 | 135 |
| 25 | 135 | 135 | 135 | 135 | 135 | 135 | 135 | 135 | 135 | 135 | 135 | 135 | 135 | 135 | 135 | 135 | 135 | 135 | 135 | 135 |
| 27 | 135 | 135 | 135 | 135 | 135 | 135 | 135 | 135 | 135 | 135 | 135 | 135 | 135 | 135 | 135 | 135 | 135 | 135 | 135 | 135 |
| 29 | 135 | 135 | 135 | 135 | 135 | 135 | 135 | 135 | 135 | 135 | 135 | 135 | 135 | 135 | 135 | 135 | 135 | 135 | 135 | 135 |
| 31 | 135 | 135 | 135 | 135 | 135 | 135 | 135 | 135 | 135 | 135 | 135 | 135 | 135 | 135 | 135 | 135 | 135 | 135 | 135 | 135 |
| 33 | 127 | 135 | 127 | 135 | 129 | 135 | 129 | 135 | 135 | 135 | 135 | 135 | 135 | 135 | 135 | 135 | 135 | 135 | 135 | 135 |
| 35 | 120 | 135 | 120 | 135 | 121 | 135 | 121 | 135 | 135 | 135 | 135 | 135 | 135 | 135 | 135 | 135 | 135 | 135 | 135 | 135 |
| 37 | 113 | 135 | 113 | 135 | 115 | 135 | 115 | 135 | 133 | 135 | 133 | 135 | 135 | 135 | 135 | 135 | 135 | 135 | 135 | 135 |
| 39 | 107 | 135 | 107 | 135 | 109 | 135 | 109 | 135 | 126 | 135 | 126 | 135 | 135 | 135 | 135 | 135 | 135 | 135 | 135 | 135 |
| 41 | 102 | 135 | 102 | 135 | 103 | 135 | 103 | 135 | 120 | 135 | 120 | 135 | 135 | 135 | 135 | 135 | 135 | 135 | 135 | 135 |
| 43 | 97 | 129 | 97 | 129 | 98 | 131 | 98 | 131 | 114 | 135 | 114 | 135 | 129 | 135 | 129 | 135 | 135 | 135 | 135 | 135 |
| 45 | 93 | 123 | 93 | 123 | 94 | 125 | 94 | 125 | 109 | 135 | 109 | 135 | 123 | 135 | 123 | 135 | 135 | 135 | 135 | 135 |
| 47 | 89 | 118 | 89 | 118 | 90 | 120 | 90 | 120 | 104 | 135 | 104 | 135 | 117 | 135 | 117 | 135 | 132 | 135 | 132 | 135 |
| 49 | 85 | 113 | 85 | 113 | 86 | 115 | 86 | 115 | 100 | 133 | 100 | 133 | 113 | 135 | 113 | 135 | 126 | 135 | 126 | 135 |
| 51 | 81 | 109 | 81 | 109 | 83 | 110 | 83 | 110 | 96 | 128 | 96 | 128 | 108 | 135 | 108 | 135 | 121 | 135 | 121 | 135 |
| 53 | 78 | 104 | 78 | 104 | 79 | 106 | 79 | 106 | 92 | 123 | 92 | 123 | 104 | 135 | 104 | 135 | 117 | 135 | 117 | 135 |
| 54 | 77 | 102 | 77 | 102 | 78 | 104 | 78 | 104 | 90 | 121 | 90 | 121 | 102 | 135 | 102 | 135 | 114 | 135 | 114 | 135 |
| 55 | 75 | 101 | 75 | 101 | 76 | 102 | 76 | 102 | 89 | 118 | 89 | 118 | 100 | 133 | 100 | 133 | 112 | 135 | 112 | 135 |

**NOTE:**
DESIGN PRESSURES SHOWN IN TABLE 3A ARE POSITIVE AND NEGATIVE (+/-).

## TABLE 3A - MULLION AND CLIP ANCHORAGE PERFORMANCE RATINGS IN WOOD FRAMING

Design Pressures (psf) when using #10 wood Screws meeting ANSI B18.6.1

| Load width | Mullion Span (in) | | | | | | | | | | | | | | | | | | | |
|---|---|---|---|---|---|---|---|---|---|---|---|---|---|---|---|---|---|---|---|---|
| | 43 | | | | 40 | | | | 37 | | | | 31 | | | | 25 | | | |
| | Ext. Clip | | Sill Clip | | Ext. Clip | | Sill Clip | | Ext. Clip | | Sill Clip | | Ext. Clip | | Sill Clip | | Ext. Clip | | Sill Clip | |
| W (in) | FE5708-1 | FE5708-4 | FE5708-2 | FE5708-5 | FE5708-1 | FE5708-4 | FE5708-2 | FE5708-5 | FE5708-1 | FE5708-4 | FE5708-2 | FE5708-5 | FE5708-1 | FE5708-4 | FE5708-2 | FE5708-5 | FE5708-1 | FE5708-4 | FE5708-2 | FE5708-5 |
| 19 | 135 | 135 | 135 | 135 | 135 | 135 | 135 | 135 | 135 | 135 | 135 | 135 | 135 | 135 | 135 | 135 | 135 | 135 | 135 | 135 |
| 21 | 135 | 135 | 135 | 135 | 135 | 135 | 135 | 135 | 135 | 135 | 135 | 135 | 135 | 135 | 135 | 135 | 135 | 135 | 135 | 135 |
| 23 | 135 | 135 | 135 | 135 | 135 | 135 | 135 | 135 | 135 | 135 | 135 | 135 | 135 | 135 | 135 | 135 | 135 | 135 | 135 | 135 |
| 25 | 135 | 135 | 135 | 135 | 135 | 135 | 135 | 135 | 135 | 135 | 135 | 135 | 135 | 135 | 135 | 135 | 135 | 135 | 135 | 135 |
| 27 | 135 | 135 | 135 | 135 | 135 | 135 | 135 | 135 | 135 | 135 | 135 | 135 | 135 | 135 | 135 | 135 | 135 | 135 | 135 | 135 |
| 29 | 135 | 135 | 135 | 135 | 135 | 135 | 135 | 135 | 135 | 135 | 135 | 135 | 135 | 135 | 135 | 135 | 135 | 135 | 135 | 135 |
| 31 | 135 | 135 | 135 | 135 | 135 | 135 | 135 | 135 | 135 | 135 | 135 | 135 | 135 | 135 | 135 | 135 | 135 | 135 | 135 | 135 |
| 33 | 135 | 135 | 135 | 135 | 135 | 135 | 135 | 135 | 135 | 135 | 135 | 135 | 135 | 135 | 135 | 135 | 135 | 135 | 135 | 135 |
| 35 | 135 | 135 | 135 | 135 | 135 | 135 | 135 | 135 | 135 | 135 | 135 | 135 | 135 | 135 | 135 | 135 | 135 | 135 | 135 | 135 |
| 37 | 135 | 135 | 135 | 135 | 135 | 135 | 135 | 135 | 135 | 135 | 135 | 135 | 135 | 135 | 135 | 135 | 135 | 135 | 135 | 135 |
| 39 | 135 | 135 | 135 | 135 | 135 | 135 | 135 | 135 | 135 | 135 | 135 | 135 | 135 | 135 | 135 | 135 | 135 | 135 | 135 | 135 |
| 41 | 135 | 135 | 135 | 135 | 135 | 135 | 135 | 135 | 135 | 135 | 135 | 135 | 135 | 135 | 135 | 135 | 135 | 135 | 135 | 135 |
| 43 | 135 | 135 | 135 | 135 | 135 | 135 | 135 | 135 | 135 | 135 | 135 | 135 | 135 | 135 | 135 | 135 | 135 | 135 | 135 | 135 |
| 45 | 135 | 135 | 135 | 135 | 135 | 135 | 135 | 135 | 135 | 135 | 135 | 135 | 135 | 135 | 135 | 135 | 135 | 135 | 135 | 135 |
| 47 | 135 | 135 | 135 | 135 | 135 | 135 | 135 | 135 | 135 | 135 | 135 | 135 | 135 | 135 | 135 | 135 | 135 | 135 | 135 | 135 |
| 49 | 135 | 135 | 135 | 135 | 135 | 135 | 135 | 135 | 135 | 135 | 135 | 135 | 135 | 135 | 135 | 135 | 135 | 135 | 135 | 135 |
| 51 | 135 | 135 | 135 | 135 | 135 | 135 | 135 | 135 | 135 | 135 | 135 | 135 | 135 | 135 | 135 | 135 | 135 | 135 | 135 | 135 |
| 53 | 133 | 135 | 133 | 135 | 135 | 135 | 135 | 135 | 135 | 135 | 135 | 135 | 135 | 135 | 135 | 135 | 135 | 135 | 135 | 135 |
| 54 | 130 | 135 | 130 | 135 | 135 | 135 | 135 | 135 | 135 | 135 | 135 | 135 | 135 | 135 | 135 | 135 | 135 | 135 | 135 | 135 |
| 55 | 128 | 135 | 128 | 135 | 135 | 135 | 135 | 135 | 135 | 135 | 135 | 135 | 135 | 135 | 135 | 135 | 135 | 135 | 135 | 135 |

PRODUCT REVISED
as complying with the Florida Building Code
Acceptance No 14-1014.05
Expiration Date Oct. 14, 2019
By Manuel Sira
Miami Dade Product Control

| REVISIONS | | | |
|---|---|---|---|
| SHEET | REV | DESCRIPTION | DATE | BY |
| 1 | B | UPDATE TO 5TH EDITION FBC (2014) | | |
| 1 | A | UPDATE TO 2010 FBC | | |

This drawing and all associated component files are the sole property of WinDoor, Inc. and contains confidential, privileged and patented information. Any reproduction of this drawing is not permitted without written approval from WinDoor, Inc. management.

Robert J. Amoruso, P.E.
FL License No. 49752

ROBERT JAMES AMORUSO LICENSE No 49752 STATE OF FLORIDA PROFESSIONAL ENGINEER
9/29/14

PTC Product Design Group, LLC
PO Box 520775
Longwood, FL 32752-0775
321-690-1788 (P) 321-690-1789 (F)
FBPE Cert. of Auth. No. 25935

WINDOOR INCORPORATED
7500 AMSTERDAM DRIVE
ORLANDO, FL 32832
Phone: 407.481.8400
Fax: 407.481.0505
www.windoorinc.com

DRAWING TITLE:
SERIES 3000/ 4000 IMPACT MULLION (LMI & SMI)
WOOD FRAME DESIGN PRESSURE LIMITS

| SIZE | DRAWN BY: | DWG NO. | REV |
|---|---|---|---|
| . | JBH | FEI0009 | B |
| SCALE NTS | DATE: 07/22/11 | SHEET 10OF11 | |

## TABLE 3B - MULLION AND CLIP ANCHORAGE PERFORMANCE RATINGS IN WOOD FRAMING

Design Pressures (psf) when using #10 Tapping Screws Type AB meeting ASME B18.6.4

| Load width | Mullion Span (In) | | | | | | | | | | | | | | | | | | | |
|---|---|---|---|---|---|---|---|---|---|---|---|---|---|---|---|---|---|---|---|---|
| | 73 | | | | 72 | | | | 62 | | | | 55 | | | | 49 | | | |
| | Ext. Clip | | Sill Clip | | Ext. Clip | | Sill Clip | | Ext. Clip | | Sill Clip | | Ext. Clip | | Sill Clip | | Ext. Clip | | Sill Clip | |
| W (In) | FE5708-1 | FE5708-4 | FE5708-2 | FE5708-5 | FE5708-1 | FE5708-4 | FE5708-2 | FE5708-5 | FE5708-1 | FE5708-4 | FE5708-2 | FE5708-5 | FE5708-1 | FE5708-4 | FE5708-2 | FE5708-5 | FE5708-1 | FE5708-4 | FE5708-2 | FE5708-5 |
| 19 | 135 | 135 | 135 | 135 | 135 | 135 | 135 | 135 | 135 | 135 | 135 | 135 | 135 | 135 | 135 | 135 | 135 | 135 | 135 | 135 |
| 21 | 135 | 135 | 135 | 135 | 135 | 135 | 135 | 135 | 135 | 135 | 135 | 135 | 135 | 135 | 135 | 135 | 135 | 135 | 135 | 135 |
| 23 | 125 | 135 | 125 | 135 | 127 | 135 | 127 | 135 | 135 | 135 | 135 | 135 | 135 | 135 | 135 | 135 | 135 | 135 | 135 | 135 |
| 25 | 114 | 135 | 114 | 135 | 116 | 135 | 116 | 135 | 135 | 135 | 135 | 135 | 135 | 135 | 135 | 135 | 135 | 135 | 135 | 135 |
| 27 | 106 | 135 | 106 | 135 | 107 | 135 | 107 | 135 | 124 | 135 | 124 | 135 | 135 | 135 | 135 | 135 | 135 | 135 | 135 | 135 |
| 29 | 98 | 131 | 98 | 131 | 99 | 133 | 99 | 133 | 115 | 135 | 115 | 135 | 130 | 135 | 130 | 135 | 135 | 135 | 135 | 135 |
| 31 | 92 | 122 | 92 | 122 | 93 | 124 | 93 | 124 | 108 | 135 | 108 | 135 | 121 | 135 | 121 | 135 | 135 | 135 | 135 | 135 |
| 33 | 86 | 114 | 86 | 114 | 87 | 116 | 87 | 116 | 101 | 135 | 101 | 135 | 114 | 135 | 114 | 135 | 128 | 135 | 128 | 135 |
| 35 | 81 | 108 | 81 | 108 | 82 | 109 | 82 | 109 | 95 | 127 | 95 | 127 | 107 | 135 | 107 | 135 | 120 | 135 | 120 | 135 |
| 37 | 76 | 102 | 76 | 102 | 77 | 103 | 77 | 103 | 90 | 120 | 90 | 120 | 101 | 135 | 101 | 135 | 114 | 135 | 114 | 135 |
| 39 | 72 | 96 | 72 | 96 | 73 | 98 | 73 | 98 | 85 | 113 | 85 | 113 | 96 | 128 | 96 | 128 | 108 | 135 | 108 | 135 |
| 41 | 69 | 92 | 69 | 92 | 70 | 93 | 70 | 93 | 81 | 108 | 81 | 108 | 91 | 121 | 91 | 121 | 102 | 135 | 102 | 135 |
| 43 | 65 | 87 | 65 | 87 | 66 | 88 | 66 | 88 | 77 | 103 | 77 | 103 | 87 | 116 | 87 | 116 | 97 | 130 | 97 | 130 |
| 45 | 62 | 83 | 62 | 83 | 63 | 84 | 63 | 84 | 73 | 98 | 73 | 98 | 83 | 110 | 83 | 110 | 93 | 124 | 93 | 124 |
| 47 | 60 | 80 | 60 | 80 | 61 | 81 | 61 | 81 | 70 | 94 | 70 | 94 | 79 | 106 | 79 | 106 | 89 | 119 | 89 | 119 |
| 49 | 57 | 76 | 57 | 76 | 58 | 77 | 58 | 77 | 67 | 90 | 67 | 90 | 76 | 101 | 76 | 101 | 85 | 114 | 85 | 114 |
| 51 | 55 | 73 | 55 | 73 | 56 | 74 | 56 | 74 | 65 | 86 | 65 | 86 | 73 | 97 | 73 | 97 | 82 | 109 | 82 | 109 |
| 53 | 53 | 70 | 53 | 70 | 54 | 71 | 54 | 71 | 62 | 83 | 62 | 83 | 70 | 93 | 70 | 93 | 79 | 105 | 79 | 105 |
| 54 | 52 | 69 | 52 | 69 | 53 | 70 | 53 | 70 | 61 | 81 | 61 | 81 | 69 | 92 | 69 | 92 | 77 | 103 | 77 | 103 |
| 55 | 51 | 68 | 51 | 68 | 52 | 69 | 52 | 69 | 60 | 80 | 60 | 80 | 67 | 90 | 67 | 90 | 76 | 101 | 76 | 101 |

**NOTE:**
DESIGN PRESSURES SHOWN IN TABLE 3B ARE POSITIVE AND NEGATIVE (+/-).

## TABLE 3B - MULLION AND CLIP ANCHORAGE PERFORMANCE RATINGS IN WOOD FRAMING

Design Pressures (psf) when using #10 Tapping Screws Type AB meeting ASME B18.6.4

| Load width | Mullion Span (In) | | | | | | | | | | | | | | | | | | | |
|---|---|---|---|---|---|---|---|---|---|---|---|---|---|---|---|---|---|---|---|---|
| | 43 | | | | 40 | | | | 37 | | | | 31 | | | | 25 | | | |
| | Ext. Clip | | Sill Clip | | Ext. Clip | | Sill Clip | | Ext. Clip | | Sill Clip | | Ext. Clip | | Sill Clip | | Ext. Clip | | Sill Clip | |
| W (In) | FE5708-1 | FE5708-4 | FE5708-2 | FE5708-5 | FE5708-1 | FE5708-4 | FE5708-2 | FE5708-5 | FE5708-1 | FE5708-4 | FE5708-2 | FE5708-5 | FE5708-1 | FE5708-4 | FE5708-2 | FE5708-5 | FE5708-1 | FE5708-4 | FE5708-2 | FE5708-5 |
| 19 | 135 | 135 | 135 | 135 | 135 | 135 | 135 | 135 | 135 | 135 | 135 | 135 | 135 | 135 | 135 | 135 | 135 | 135 | 135 | 135 |
| 21 | 135 | 135 | 135 | 135 | 135 | 135 | 135 | 135 | 135 | 135 | 135 | 135 | 135 | 135 | 135 | 135 | 135 | 135 | 135 | 135 |
| 23 | 135 | 135 | 135 | 135 | 135 | 135 | 135 | 135 | 135 | 135 | 135 | 135 | 135 | 135 | 135 | 135 | 135 | 135 | 135 | 135 |
| 25 | 135 | 135 | 135 | 135 | 135 | 135 | 135 | 135 | 135 | 135 | 135 | 135 | 135 | 135 | 135 | 135 | 135 | 135 | 135 | 135 |
| 27 | 135 | 135 | 135 | 135 | 135 | 135 | 135 | 135 | 135 | 135 | 135 | 135 | 135 | 135 | 135 | 135 | 135 | 135 | 135 | 135 |
| 29 | 135 | 135 | 135 | 135 | 135 | 135 | 135 | 135 | 135 | 135 | 135 | 135 | 135 | 135 | 135 | 135 | 135 | 135 | 135 | 135 |
| 31 | 135 | 135 | 135 | 135 | 135 | 135 | 135 | 135 | 135 | 135 | 135 | 135 | 135 | 135 | 135 | 135 | 135 | 135 | 135 | 135 |
| 33 | 135 | 135 | 135 | 135 | 135 | 135 | 135 | 135 | 135 | 135 | 135 | 135 | 135 | 135 | 135 | 135 | 135 | 135 | 135 | 135 |
| 35 | 135 | 135 | 135 | 135 | 135 | 135 | 135 | 135 | 135 | 135 | 135 | 135 | 135 | 135 | 135 | 135 | 135 | 135 | 135 | 135 |
| 37 | 129 | 135 | 129 | 135 | 135 | 135 | 135 | 135 | 135 | 135 | 135 | 135 | 135 | 135 | 135 | 135 | 135 | 135 | 135 | 135 |
| 39 | 123 | 135 | 123 | 135 | 132 | 135 | 132 | 135 | 135 | 135 | 135 | 135 | 135 | 135 | 135 | 135 | 135 | 135 | 135 | 135 |
| 41 | 117 | 135 | 117 | 135 | 125 | 135 | 125 | 135 | 135 | 135 | 135 | 135 | 135 | 135 | 135 | 135 | 135 | 135 | 135 | 135 |
| 43 | 111 | 135 | 111 | 135 | 119 | 135 | 119 | 135 | 129 | 135 | 129 | 135 | 135 | 135 | 135 | 135 | 135 | 135 | 135 | 135 |
| 45 | 106 | 135 | 106 | 135 | 114 | 135 | 114 | 135 | 123 | 135 | 123 | 135 | 135 | 135 | 135 | 135 | 135 | 135 | 135 | 135 |
| 47 | 101 | 135 | 101 | 135 | 109 | 135 | 109 | 135 | 118 | 135 | 118 | 135 | 135 | 135 | 135 | 135 | 135 | 135 | 135 | 135 |
| 49 | 97 | 129 | 97 | 129 | 104 | 135 | 104 | 135 | 113 | 135 | 113 | 135 | 135 | 135 | 135 | 135 | 135 | 135 | 135 | 135 |
| 51 | 93 | 124 | 93 | 124 | 100 | 134 | 100 | 134 | 108 | 135 | 108 | 135 | 129 | 135 | 129 | 135 | 135 | 135 | 135 | 135 |
| 53 | 90 | 120 | 90 | 120 | 96 | 128 | 96 | 128 | 104 | 135 | 104 | 135 | 124 | 135 | 124 | 135 | 135 | 135 | 135 | 135 |
| 54 | 88 | 117 | 88 | 117 | 95 | 126 | 95 | 126 | 102 | 135 | 102 | 135 | 122 | 135 | 122 | 135 | 135 | 135 | 135 | 135 |
| 55 | 86 | 115 | 86 | 115 | 93 | 124 | 93 | 124 | 100 | 134 | 100 | 134 | 120 | 135 | 120 | 135 | 135 | 135 | 135 | 135 |

PRODUCT REVISED
as complying with the Florida
Building Code
Acceptance No 14-1014.05
Expiration Date Oct. 14, 2019
By Manuel Perez
Miami Dade Product Control

| REVISIONS | | | |
|---|---|---|---|
| SHEET | REV | DESCRIPTION | DATE | BY |
| 1 | B | UPDATE TO 5TH EDITION FBC (2014) | | |
| 1 | A | UPDATE TO 2010 FBC | | |

This drawing and all associated components files are the sole property of WinDoor, Inc. and contains confidential, privileged and patented information. Any reproduction of this drawing is not permitted without written approval from WinDoor, Inc. management.

Robert J. Amoruso, P.E.
FL License No. 49752

ROBERT JAMES AMORUSO
LICENSE
No 49752
9/29/14
STATE OF FLORIDA
PROFESSIONAL ENGINEER

PTC Product Design Group, LLC
PO Box 520775
Longwood, FL 32752-0775
321-690-1788 (P) 321-690-1789 (F)
FBPE Cert. of Auth. No. 25935

WINDOOR INCORPORATED
7500 AMSTERDAM DRIVE
ORLANDO, FL 32832
Phone: 407.481.8400
Fax: 407.481.0505
www.windoorinc.com

DRAWING TITLE:
SERIES 3000/ 4000 IMPACT MULLION (LMI & SMI)
WOOD FRAME DESIGN PRESSURE LIMITS

| SIZE | DRAWN BY: | DWG NO. | REV |
|---|---|---|---|
| SIZE | JBH | FEI0009 | B |
| SCALE NTS | DATE: 07/22/11 | SHEET 11OF11 | |