MIAMI-DADE COUNTY
PRODUCT CONTROL SECTION
11805 SW 26 Street, Room 208
Miami, Florida 33175-2474
T (786) 315-2590 F (786) 315-2599
www.miamidade.gov/economy

DEPARTMENT OF REGULATORY AND ECONOMIC RESOURCES (RER)
BOARD AND CODE ADMINISTRATION DIVISION

NOTICE OF ACCEPTANCE (NOA)

Mesker Door, LLC
3440 Stanwood Blvd.,
Huntsville, AL 35811

SCOPE:

This NOA is being issued under the applicable rules and regulations governing the use of construction materials. The documentation submitted has been reviewed and accepted by Miami-Dade County RER -Product Control Section to be used in Miami Dade County and other areas where allowed by the Authority Having Jurisdiction (AHJ).
This NOA shall not be valid after the expiration date stated below. The Miami-Dade County Product Control Section (In Miami Dade County) and/or the AHJ (in areas other than Miami Dade County) reserve the right to have this product or material tested for quality assurance purposes. If this product or material fails to perform in the accepted manner, the manufacturer will incur the expense of such testing and the AHJ may immediately revoke, modify, or suspend the use of such product or material within their jurisdiction. RER reserves the right to revoke this acceptance, if it is determined by Miami-Dade County Product Control Section that this product or material fails to meet the requirements of the applicable building code.
This product is approved as described herein, and has been designed to comply with the Florida Building Code, including the High Velocity Hurricane Zone.

DESCRIPTION: N-Series Outswing Opaque Steel Doors-LMI

APPROVAL DOCUMENT: Drawing No. **AD14-19**, titled "N-Series Outswing Opaque Steel Door (LMI/SMI)", sheets 1 through 12 of 12, prepared by MYC Engineering Inc., dated 01/21/15 and last revised on JUL 01, 2015, signed and sealed by Yipping Wang, P.E., bearing the Miami-Dade County Product Control Approval stamp with the Notice of Acceptance number and Approval date by the Miami-Dade County Product Control Section.

MISSILE IMPACT RATING: Large and Small Missile Impact Resistant

Limitations:

1. See sheet 1 thru 4 for Lock Hardware Options. See sheets 1 thru 5 for Anchor Bracket types and anchor types.
2. See sheet 3 for Embossed or Flush panel options.
3. Private labelling is **not** part of this approval.

LABELING: Each unit shall bear a permanent label with the manufacturer's name or logo, city, state and series and following statement: "Miami-Dade County Product Control Approved", noted herein.

RENEWAL of this NOA shall be considered after a renewal application has been filed and there has been no change in the applicable building code negatively affecting the performance of this product.

TERMINATION of this NOA will occur after the expiration date or if there has been a revision or change in the materials, use, and/or manufacture of the product or process. Misuse of this NOA as an endorsement of any product, for sales, advertising or any other purposes shall automatically terminate this NOA. Failure to comply with any section of this NOA shall be cause for termination and removal of NOA.

ADVERTISEMENT: The NOA number preceded by the words Miami-Dade County, Florida, and followed by the expiration date may be displayed in advertising literature. If any portion of the NOA is displayed, then it shall be done in its entirety.

INSPECTION: A copy of this entire NOA shall be provided to the user by the manufacturer or its distributors and shall be available for inspection at the job site at the request of the Building Official.

This NOA consists of this page 1 and evidence pages E-1, as well as approval document mentioned above.

The submitted documentation was reviewed by **Ishaq I. Chanda, P.E.**

MIAMI-DADE COUNTY APPROVED

7/9/15

NOA No. 14-1021.03
Expiration Date: July 16, 2020
Approval Date: July 16, 2015

Mesker Door, LLC

NOTICE OF ACCEPTANCE: EVIDENCE SUBMITTED

A. DRAWINGS

1. Manufacturer's die drawings and sections
2. Drawing No. **AD14-19**, titled "N-Series Outswing Opaque Steel Door (LMI/SMI)", sheets 1 through 12 of 12, prepared by MYC Engineering Inc., dated 01/21/15 and last revised on JUL 01, 2015, signed and sealed by Yipping Wang, P.E.

B. TESTS

1. Test reports on: 1) Air Infiltration Test, per FBC, TAS 202-94
   2) Uniform Static Air Pressure Test, Loading per FBC TAS 202-94
   3) Water Resistance Test, per FBC, TAS 202-94
   4) Large Missile Impact Test per FBC, TAS 201-94
   5) Cyclic Wind Pressure Loading per FBC, TAS 203-94
   6) Forced Entry Test, per FBC 2411 3.2.1, TAS 202-94

   along with marked-up drawings and installation diagram of outswing Steel door w/ glazed steel lite kit assembly, prepared by Fenestration Testing Lab, Inc., Test Report No. **FTL 7245**, dated 08/22/14 and **FTL 8120**, dated 12/19/14, signed and sealed by Idalmis Ortega, P. E.
   Note: Test report FTL**7245** has been revised by an addendum letter dated April 10, 2015, issued by Fenestration Testing lab, signed and sealed by Idalmis Ortega, P. E.

C. CALCULATIONS

1. Anchor Verification calculation dated 01/12/15, 07/01/15 and last revised on JUL 07, 2015, prepared by MYC Engineering Inc., signed and sealed by Yipping Wang, P.E.

D. QUALITY ASSURANCE

1. Miami Dade Department of Regulatory and Economic Resources (RER).

E. MATERIAL CERTIFICATIONS

1. Tensile strength test report **FTL 8319** for "Kit Steel frame" per ASTME-08, dated 04/07/15 issued by Fenestration Testing lab, signed and sealed by Idalmis Ortega, P. E.

F. STATEMENTS

1. Statement letter of conformance FBC 2014 (**5th** Edition) and letter of no financial interest, dated 01/09/15, prepared by MYC Engineering Inc., signed and sealed by Yipping Wang, P.E.
2. Statement letter dated 07/08/15, issued by Mesker Holding, LLC stating Mesker Door, LLC is the subsidiary of Mesker Holding and requesting NOA to be issued under Mesker Door, LLC, signed by Aaron R Schwartz, Chief Financial Officer.
3. State of Alabama Business entity details and legal name listing dated 11-07-2013, signed by Secretary of State.
4. Lab compliance as part of the above referenced test report.

G. OTHER

1. Test proposal #**13-1401**, dated 04/04/14 approved by RER.
2. Internet posting of Mesker Holding, LLC

Ishaq I. Chanda

Ishaq I. Chanda, P.E.
Product Control Examiner
NOA No. 14-1021.03
Expiration Date: July 16, 2020
Approval Date: July 16, 2015

ANCHOR BRACKET TYPE A		
ANCHOR TYPES	NUMBER OF ANCHOR REQ'D	
	DOOR MAX. WIDTH X HEIGHT	
	96" X 96"	84" X 84"
D1	4	4
B, B1, D	2	2
C, F	2	1

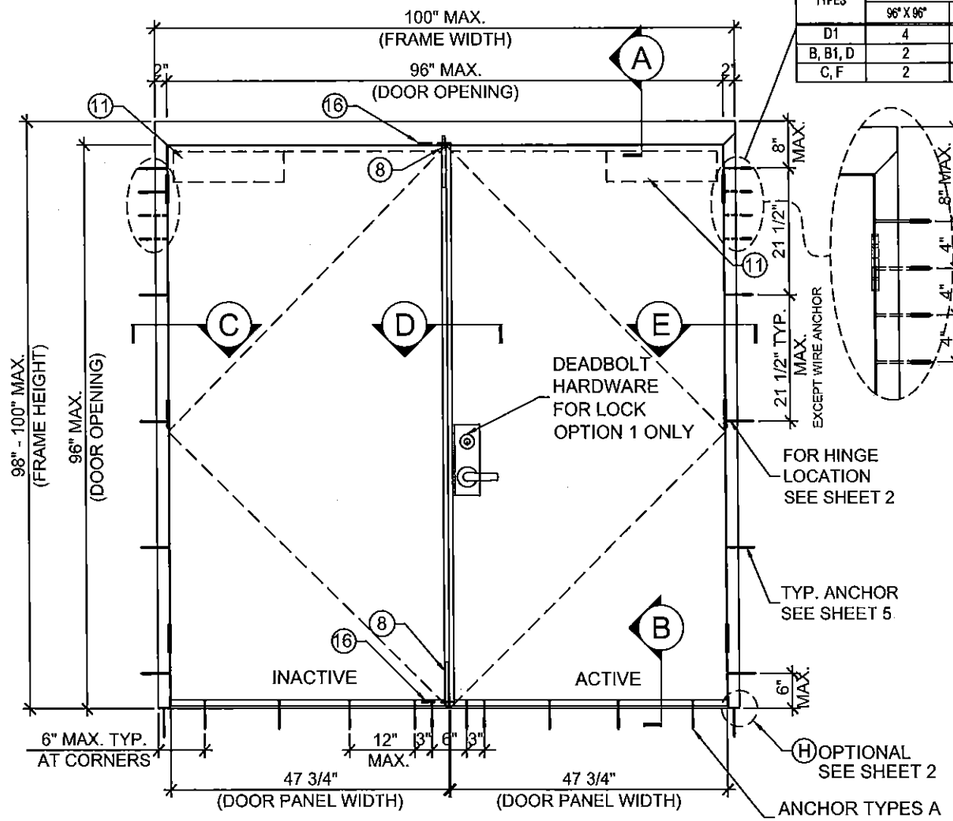

TYPICAL EXTERIOR ELEVATION (XX)

(LOCK OPTION 1 (MORTISE LOCK WITH DEADBOLT) & LOCK OPTION 2 (CYLINDRICAL LOCK) SEE SHEET 9)

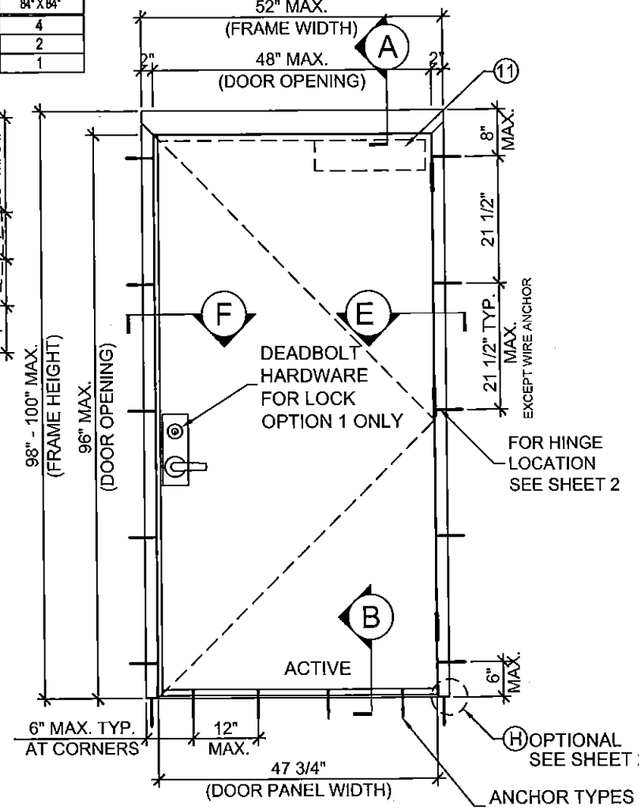

TYPICAL EXTERIOR ELEVATION (X)

(LOCK OPTION 1 (MORTISE LOCK WITH DEADBOLT) & LOCK OPTION 2 (CYLINDRICAL LOCK) SEE SHEET 9)

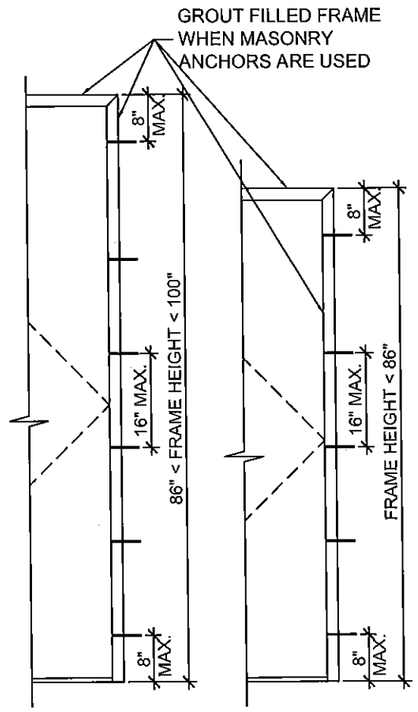

ANCHOR LAYOUT
WIRE ANCHOR H & STRAP ANCHOR K

(FOR BOTH SINGLE & DOUBLE DOORS)

N SERIES OPAQUE OUTSWING STEEL DOOR (LMI & SMI)

- THIS PRODUCT HAS BEEN DESIGNED AND TESTED TO COMPLY WITH THE REQUIREMENTS OF THE FLORIDA BUILDING CODE 2010/2014 EDITION INCLUDING HIGH VELOCITY HURRICANE ZONE (HVHZ).
- DOORS RATED FOR LARGE AND SMALL MISSILE IMPACT AND DO NOT REQUIRE SHUTTERS.
- ALL DOOR OPENINGS PASSED WITH WATER INFILTRATION.
- ANCHORS SHALL BE AS LISTED, SPACED AS SHOWN ON DETAILS. ANCHORS EMBEDMENT TO BASE MATERIAL SHALL BE BEYOND WALL DRESSING OR STUCCO.
- ANCHORING OR LOADING CONDITIONS NOT SHOWN IN THESE DETAILS ARE NOT PART OF THIS APPROVAL.
- MATERIALS INCLUDING BUT NOT LIMITED TO STEEL/METAL SCREWS THAT COME INTO CONTACT WITH OTHER DISSIMILAR MATERIALS SHALL MEET THE REQUIREMENTS OF 2010/2014 FLORIDA BLDG. CODE SECTION AS APPLICABLE.
- METAL STRUCTURES NOT BY MESKER DOOR INC. MUST SUPPORT LOADS IMPOSED BY DOOR SYSTEM AND TRANSFER THEM TO THE BUILDING STRUCTURE.
- 1X OR 2X WOOD BUCKS BY OTHERS MUST BE ANCHORED PROPERLY TO TRANSFER LOADS TO THE STRUCTURE.
- A LOAD DURATION FACTOR IN ALLOWABLE STRESS IS USED IN DESIGN OF ANCHORS INTO WOOD ONLY.
- DOOR PANEL: MIN. 18 GA. GAV. STEEL, Fy = 42 KSI MIN., Fu = 51.5 KSI MIN.
  DOOR FRAME: MIN. 16 GA. GAV. STEEL, Fy = 42 KSI MIN., Fu = 51.5 KSI MIN.
- ULTIMATE DESIGN LOAD OBTAINED FROM ASCE-7-10, MULTIPLY BY 0.6 SHALL BE LESS THAN OR EQUAL TO MAX. DESIGN LOAD IN THIS DOCUMENT.

NOTES:
EGRESS REQUIREMENTS TO BE REVIEWED BY BUILDING OFFICIAL.
ALL OPENINGS PASSED WITH WATER INFILTRATION.

DESIGN LOADS (FOR SIZES SHOWN ABOVE OR SMALLER) AS PERMITTED BY FBC
+65.0 PSF
- 65.0 PSF

Approved as complying with the Florida Building Code
Date 3/19/2015
NOA 14-1021.03
Miami-Dade Product Control
By Ishaq I. Chanda
MIAMI DADE COUNTY

YIPING WANG, P.E.
FLORIDA REGISTRATION
PE #55983
C.A.N. 28677

REVISIONS		
NO	DATE	DESCRIPTION
1	6/26/15	PER RFI COMMENTS

MCY ENGINEERING, INC.
GLAZING CONSULTANTS
8501 SW 124 AVE. STE. 205A
MIAMI, FL 33183
P: 305.271.0117
F: 786.573.5063
www.MCYUS.com
MCY.Engineering@Att.net

N SERIES OUTSWING STEEL OPAQUE DOOR (18GA) - LMI & SMI

MESKER DOOR, LLC.
3440 STANDWOOD BLVD.
HUNTSVILLE, AL 35811
P: (256) 851 - 6670 F: (800) 503 - 1410

DATE	1/20/15
SCALE	AS SHOWN
DRAWN	Pedro
PROJECT	11-007

DRAWING NO.
AD14-19

1 OF 12

JUL 01 2015

ANCHOR BRACKET TYPE A		
ANCHOR TYPES	NUMBER OF ANCHOR REQ'D	
	DOOR MAX. WIDTH X HEIGHT	
	96" X 96"	84" X 84"
D1	4	4
B, B1, D	2	2
C, F	2	1

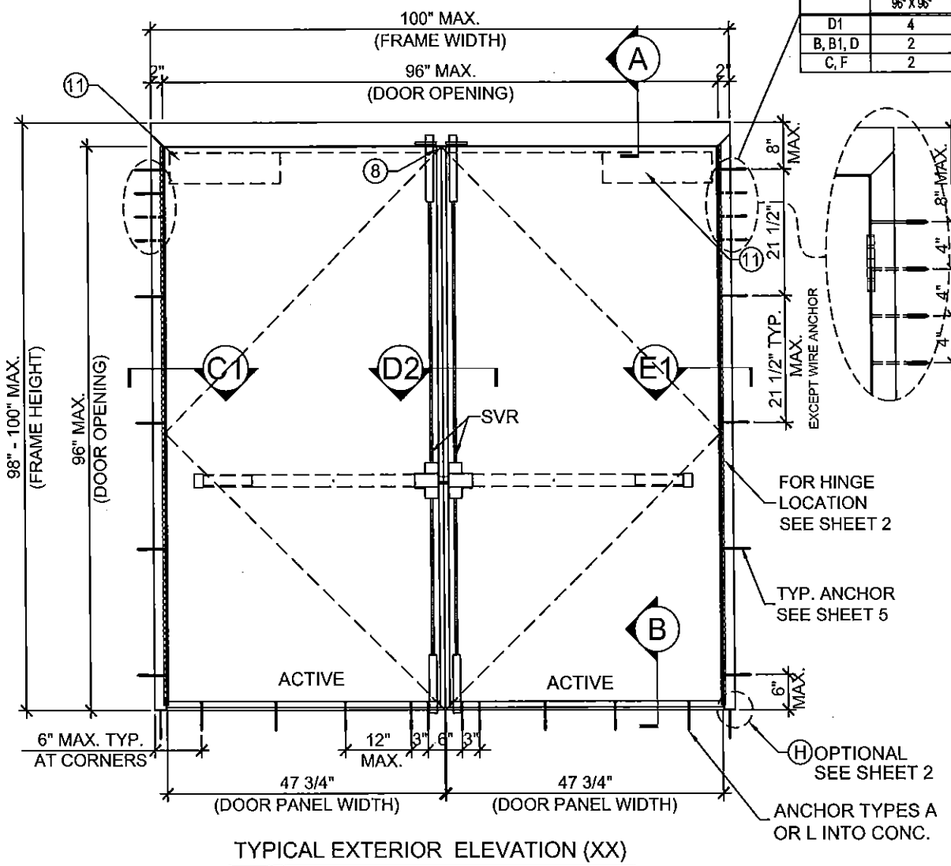

TYPICAL EXTERIOR ELEVATION (XX)

(DOUBLE PANEL OUTSWING OPAQUE DOOR)
(LOCK OPTION 5 (SVR) SEE SHEET 9)

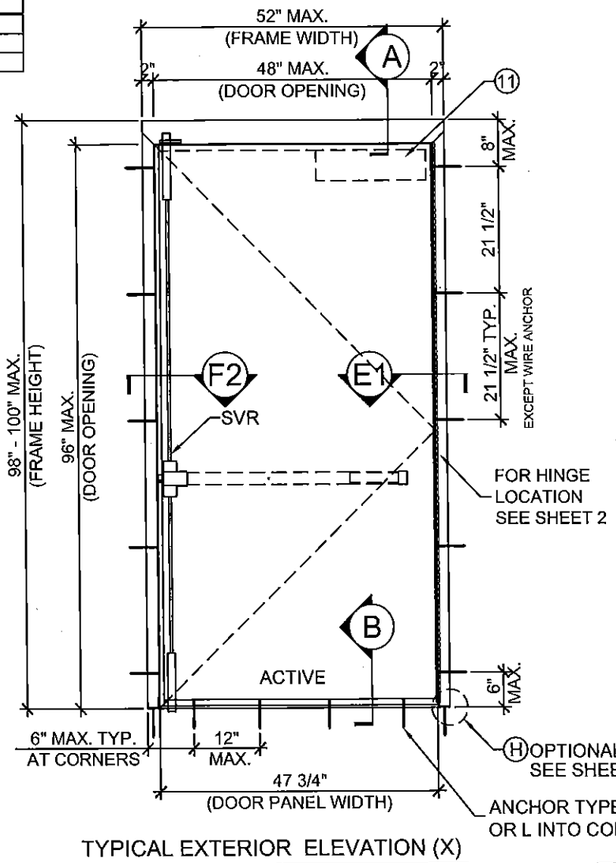

TYPICAL EXTERIOR ELEVATION (X)

(SINGLE PANEL OUTSWING OPAQUE DOOR)
(LOCK OPTION 5 (SVR) SEE SHEET 9)

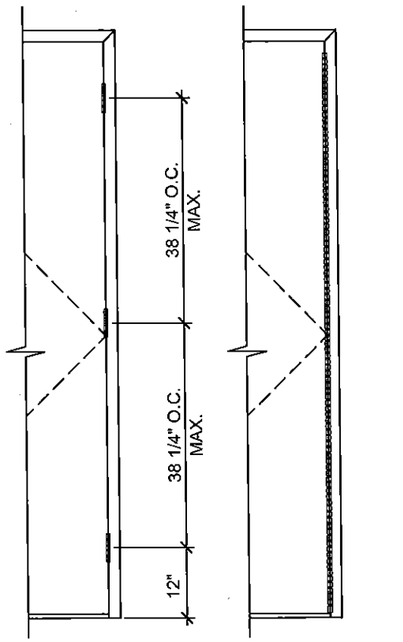

HINGE LAYOUTS

(FOR BOTH SINGLE & DOUBLE DOORS)
(SEE DETAIL ON SHEET 5)

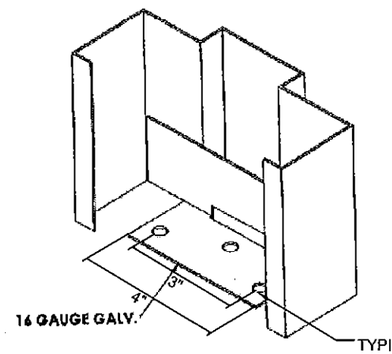

H FRAME ANCHOR

SILL ANCHOR DOUBLE RABBET FRAME (OPTIONAL)

DESIGN LOADS
(FOR SIZES SHOWN ABOVE OR SMALLER) AS PERMITTED BY FBC
+65.0 PSF
- 65.0 PSF

NOTE:
CONTINUOUS HINGE OR BB5 HINGE ACCEPTABLE ON ALL OPTIONS.
FOR PANEL HINGE OPTIONS, SEE SHEET 5.
FOR DOOR EDGE AND EDGE SEAM OPTIONS SEE SHEET 4.

Approved as complying with the Florida Building Code
Date 7/16/15
NOA 14-1021.03
Miami-Dade Product Control
By Ichung I. Chan

MIAMI DADE COUNTY

YIPING WANG, P.E.
FLORIDA REGISTRATION
PE #55983
C.A.N. 28677

REVISIONS		
NO	DATE	DESCRIPTION
1	6/26/15	PER JOE COMMENTS

MCY ENGINEERING, INC.
GLAZING CONSULTANTS
8501 SW 124 AVE. STE. 205A
MIAMI, FL 33183
P: 305.271.0117
F: 786.573.5063
www.MCYUS.com
MCY.Engineering@Att.net

N SERIES OUTSWING STEEL OPAQUE DOOR (18GA) - LMI & SMI

MESKER DOOR, LLC.
3440 SANDWOOD BLVD.
HUNTSVILLE, AL 35811
P: (256) 851 - 6670 F: (800) 503 - 1410

DATE	1/20/15
SCALE	AS SHOWN
DRAWN	Pedro
PROJECT	11-007

DRAWING NO.
AD14-19

2 OF 12

JUL 01 2015

ANCHOR BRACKET TYPE A		
ANCHOR TYPES	NUMBER OF ANCHOR REQ'D	
	DOOR MAX. WIDTH X HEIGHT	
	96" X 96"	84" X 84"
D1	4	4
B, B1, D	2	2
C, F	2	1

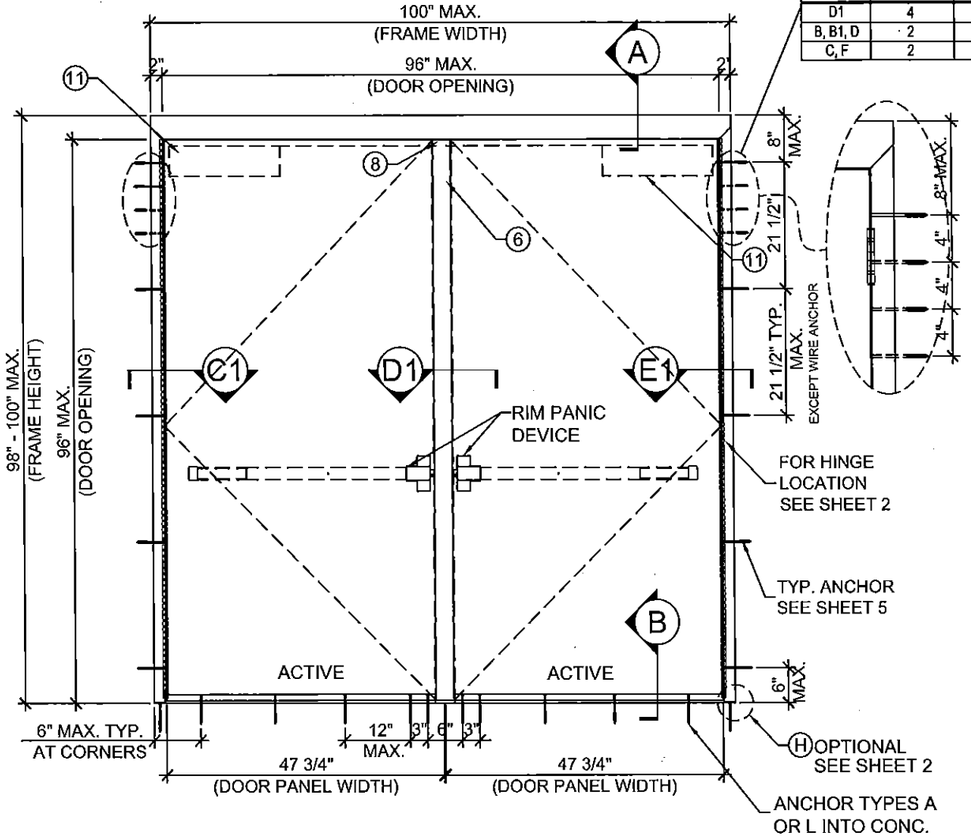

TYPICAL EXTERIOR ELEVATION (XX)

(DOUBLE PANEL OUTSWING OPAQUE DOOR)
(RIM PANIC LOCK OPTION 3 SEE SHEET 9)
WITH MULLION

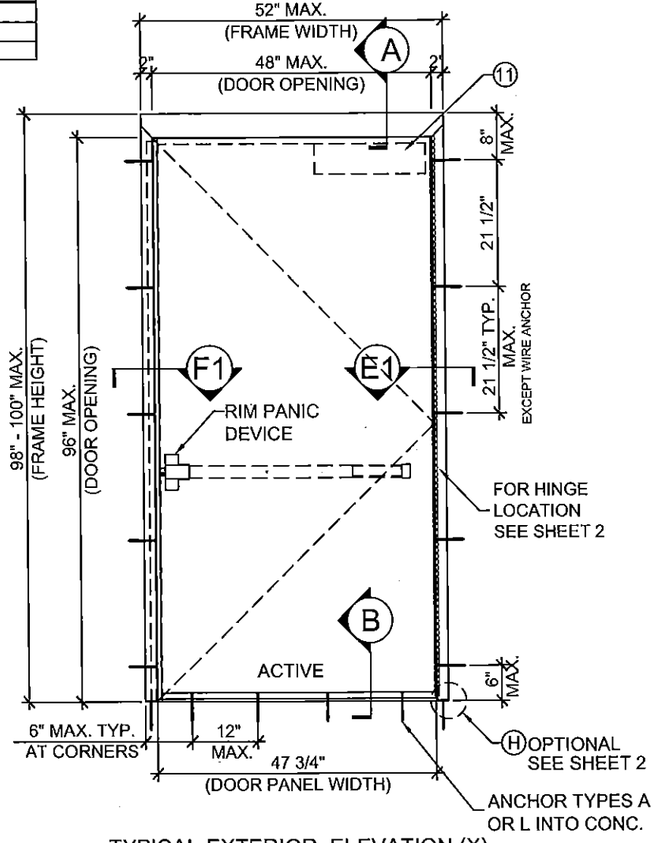

TYPICAL EXTERIOR ELEVATION (X)

(SINGLE PANEL OUTSWING OPAQUE DOOR)
(RIM PANIC LOCK OPTION 3 SEE SHEET 9)

Approved as complying with the Florida Building Code
Date 7/16/15
NOA# 14-1021.03
Miami Dade Product Control
By Ishaq I. Chanda

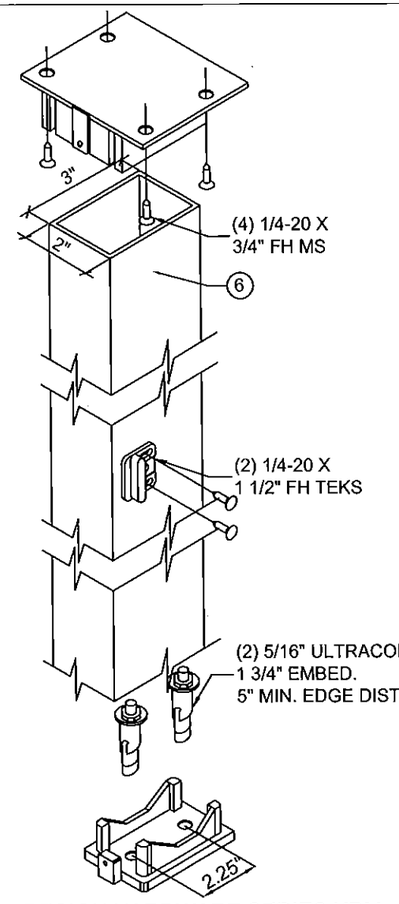

DESIGN HARDWARE SERIES KRM
REMOVABLE MULLION

Fy=36 KSI MIN.
1/8" THK. STEEL

DESIGN LOADS (FOR SIZES SHOWN ABOVE OR SMALLER) AS PERMITTED BY FBC
+65.0 PSF
- 65.0 PSF

NOTE:
CONTINUOUS HINGE OR BB5 HINGE ACCEPTABLE ON ALL OPTIONS.
FOR PANEL HINGE OPTIONS, SEE SHEET 5.
FOR DOOR EDGE AND EDGE SEAM OPTIONS SEE SHEET 4.

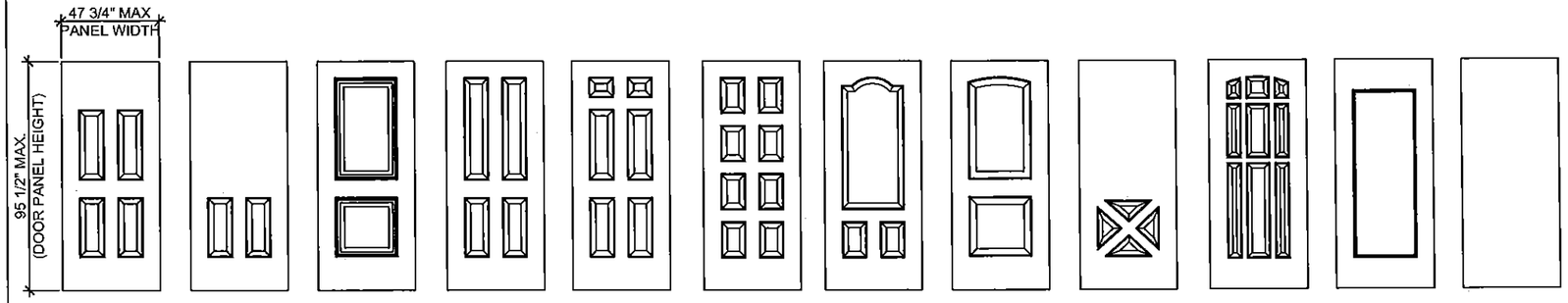

OPTIONAL PARTIAL EMBOSSED DOOR LEAF PATTERNS
(MIN. Fy = 42 KSI, MIN. Fu = 51.5 KSI)

FLUSH DOOR
(MIN. Fy = 42 KSI
MIN. Fu = 51.5 KSI)

MIAMI DADE COUNTY

YIPING WANG, P.E.
FLORIDA REGISTRATION
PE. #55983
C.A.N. 28677

REVISIONS		
NO	DATE	DESCRIPTION
1	6/26/15	PER SEE COMMENTS

MCY ENGINEERING, INC.
GLAZING CONSULTANTS
8501 SW 124 AVE. STE. 205A
MIAMI, FL 33183
P: 305.271.0117
F: 786.573.5063
www.MCYUS.com
MCY.Engineering@Att.net

N SERIES OUTSWING STEEL OPAQUE DOOR (18GA) - LMI & SMI

MESKER DOOR, LLC.
3440 STANDWOOD BLVD.
HUNTSVILLE, AL 35811
P: (256) 851 - 6670 F: (800) 503 - 1410

DATE	1/20/15
SCALE	AS SHOWN
DRAWN	Pedro
PROJECT	11-007

DRAWING NO.
AD14-19

3 OF 12

JUL 01 2015

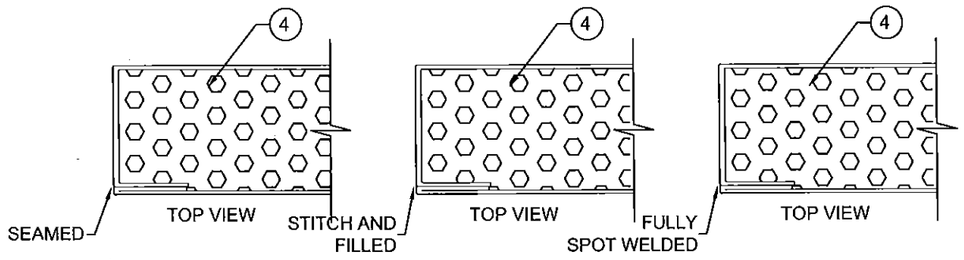

DOOR EDGE SEAM OPTIONS

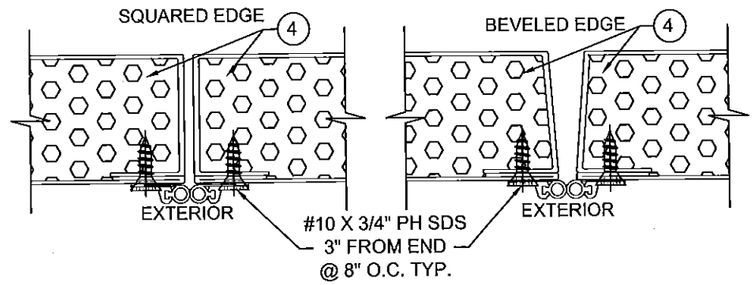

DOOR EDGE OPTIONS

ANCHOR BRACKET TYPE A		
ANCHOR TYPES	NUMBER OF ANCHOR REQ'D	
	DOOR MAX. WIDTH X HEIGHT	
	96" X 96"	84" X 84"
D1	4	4
B, B1, D	2	2
C, F	2	1

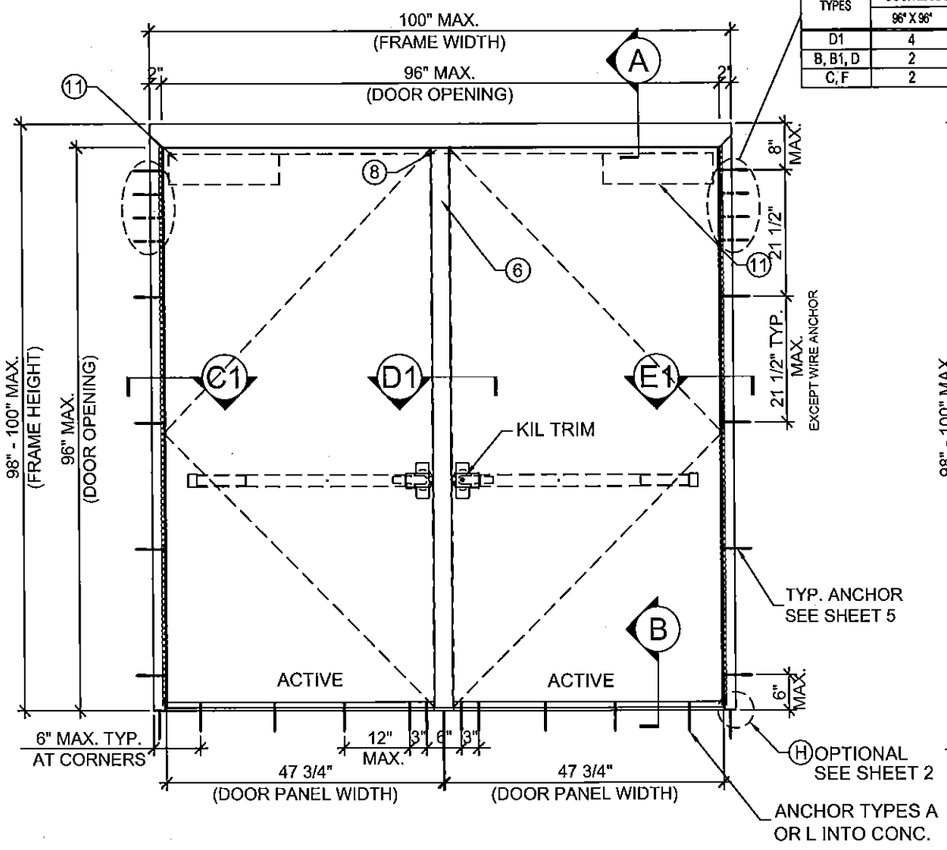

TYPICAL EXTERIOR ELEVATION (XX)

(DOUBLE PANEL OUTSWING OPAQUE DOOR)
(RIM PANIC LOCK OPTION 4 SEE SHEET 9)
WITH MULLION

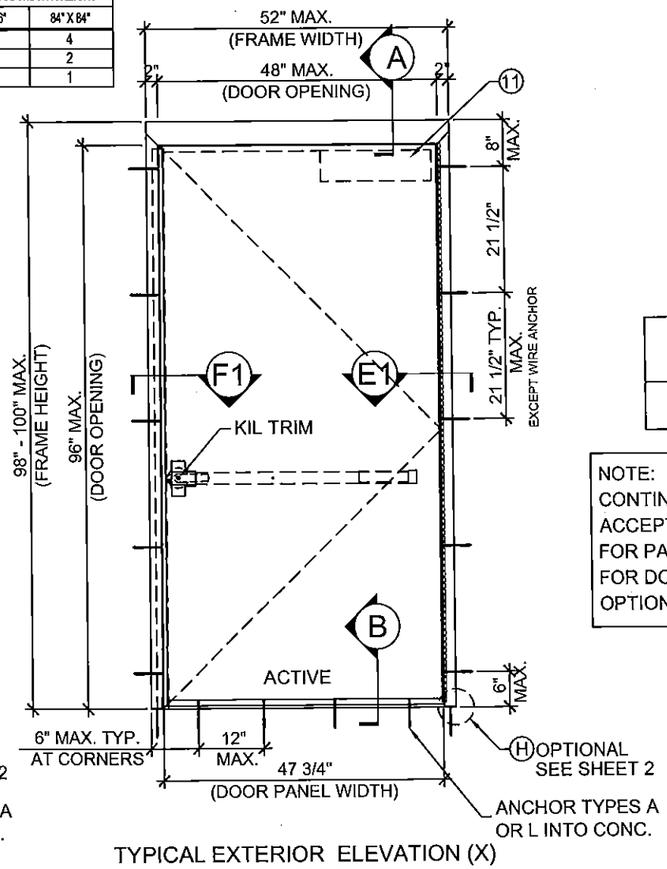

TYPICAL EXTERIOR ELEVATION (X)

(SINGLE PANEL OUTSWING OPAQUE DOOR)
(RIM PANIC LOCK OPTION 4 SEE SHEET 9)

Approved as complying with the Florida Building Code
Date 7/16/15
NOA# 14-1021.03
Miami Dade Product Control
By Ishang T. Chang

DESIGN LOADS (FOR SIZES SHOWN ABOVE OR SMALLER) AS PERMITTED BY FBC
+65.0 PSF
- 65.0 PSF

NOTE:
CONTINUOUS HINGE OR BB5 HINGE ACCEPTABLE ON ALL OPTIONS.
FOR PANEL HINGE OPTIONS, SEE SHEET 5.
FOR DOOR EDGE AND EDGE SEAM OPTIONS SEE SHEET 4.

MIAMI DADE COUNTY

YIPING WANG, P.E.
FLORIDA REGISTRATION
PE #55983
C.A.N. 28677

JUL 01 2015

REVISIONS

NO	DATE	DESCRIPTION
1	6/29/15	PER RAI COMMENTS

MCY ENGINEERING, INC.
GLAZING CONSULTANTS
8501 SW 124 AVE. STE. 205A
MIAMI, FL 33183
P: 305.271.0117
F: 786.573.5063
www.MCYUS.com
MCY.Engineering@Att.net

N SERIES OUTSWING STEEL OPAQUE DOOR (18GA) - LMI & SMI

MESKER DOOR, LLC.
3440 STANDWOOD BLVD.
HUNTSVILLE, AL 35811
P: (256) 851 - 6670 F: (800) 503 - 1410

DATE	1/20/15
SCALE	AS SHOWN
DRAWN	Pedro
PROJECT	11-007

DRAWING NO.
AD14-19

TYPICAL ANCHORS @ JAMB: (REFER TO ELEVATION FOR SPACING)

TYPE B — 3/8" DIA. HLC SLEEVE ANCHOR BY 'HILTI'
DIRECTLY INTO fc'=3000 PSI CONCRETE
1-3/8" MIN. EMBED, 3 1/4" MIN. EDGE DISTANCE

TYPE B1 — 3/8" DIA. HLC SLEEVE ANCHOR BY 'HILTI'
DIRECTLY INTO fm'=3000 PSI INTO GROUT FILLED CONCRETE BLOCK
1-3/8" MIN. EMBED, 3 1/2" MIN. EDGE DISTANCE

TYPE C — 3/8" DIA. SLEEVE ANCHOR BY 'POWERS'
DIRECTLY INTO CONCRETE fc'=3000 PSI MIN.
2 1/2" MIN. EMBED, 3 1/8" MIN. EDGE DISTANCE

TYPE D — 3/8" DIA. WEDGE BOLT BY 'POWERS'
DIRECTLY INTO CONCRETE fc'=3000 PSI MIN.
1 1/2" MIN. EMBED, 3 1/4" MIN. EDGE DISTANCE

TYPE D1 — 3/8" DIA. WEDGE BOLT BY 'POWERS'
DIRECTLY INTO GROUT FILLED CONCRETE BLOCK fm'=3000 PSI MIN.
1 1/2" MIN. EMBED, 3 3/4" MIN. EDGE DISTANCE

TYPE F — 5/16" DIA. SMS OR MACHINE BOLTS (MIN. GRADE 2 CRS) OR ST/ST INTO METAL STRUCTURES, 5/8" MIN. EDGE DISTANCE
STEEL: Fy = 36 KSI MIN. 1/4" MIN. THK.
ALUMINUM: 6063-T5, 1/4" MIN. THK.

NOTE:
EACH TYPE OF ANCHOR SHALL BE USED WITH ANCHOR BRACKET TYPE A.

WIRE ANCHOR (REFER TO ELEVATION FOR SPACING)
(SEE DETAIL ON SHEET 10)

TYPE H — WIRE ANCHOR (PF-2) (Fy = 60 KSI.) MIN.
0.182 DIA. STEEL WIRE ANCHORS EMBED INTO GROUT FILLED CONCRETE BLOCK fm'=1500 PSI MIN.

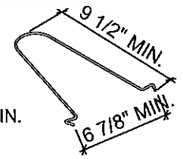

STRAP ANCHOR (REFER TO ELEVATION FOR SPACING)
(SEE DETAIL ON SHEET 10)

TYPE J & K — STRAP ANCHOR (PF-2) (PS-241) (Fy=60 KSI.) MIN.
INTO GROUT FILLED CONCRETE BLOCK
fm'=3000 PSI MIN.

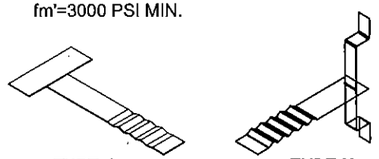

TYPE J TYPE K

NOTE:
WOOD OR STEEL STRUCTURAL MEMBERS OF WOOD AND STEEL-STUD WALLS MUST BE DESIGNED TO CARRY AT LEAST 271 LB/FT FOR DOORS RATED @ 65 PSF.

ANCHORS BRACKET:
(SEE DETAILS ON SHEET 10)

TYPE A — TUBE ANCHOR (PF-10)
(SEE ELEVATIONS ON SHEETS 1 THRU 4 FOR ANCHOR BRACKET LOCATIONS)

TYPE B — Z ANCHOR (PF-9)
(SEE ELEVATION BELOW FOR ANCHOR BRACKET LAYOUT)

TYPE C — WOOD STUD ANCHOR (F-24)
(SEE ELEVATION BELOW FOR ANCHOR BRACKET LAYOUT)

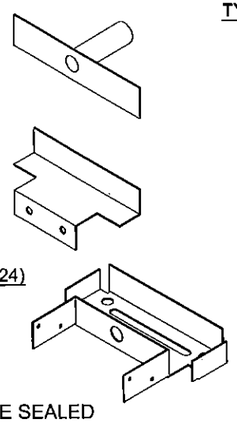

SEALANT:
ALL FRAME JOINTS AND CORNERS TO BE SEALED WITH SILICONE AT PERIMETER

NOTE:
JAMB SUBSTRATE CAN BE GROUT FILLED CONCRETE, 2X WOOD BUCKS, WOOD STRUCTURAL MEMBER(S), FILLED CONCRETE BLOCK WALL AND METAL STRUCTURE (STEEL OR ALUMINUM). ANCHOR TYPE SHOWN ABOVE SHOULD BE CHOSEN BASED ON SUBSTRATE TYPE IN THE PROJECT. ANY TYPE OF ANCHOR NOT SPECIFIED HERE IS NOT PART OF THIS APPROVAL.

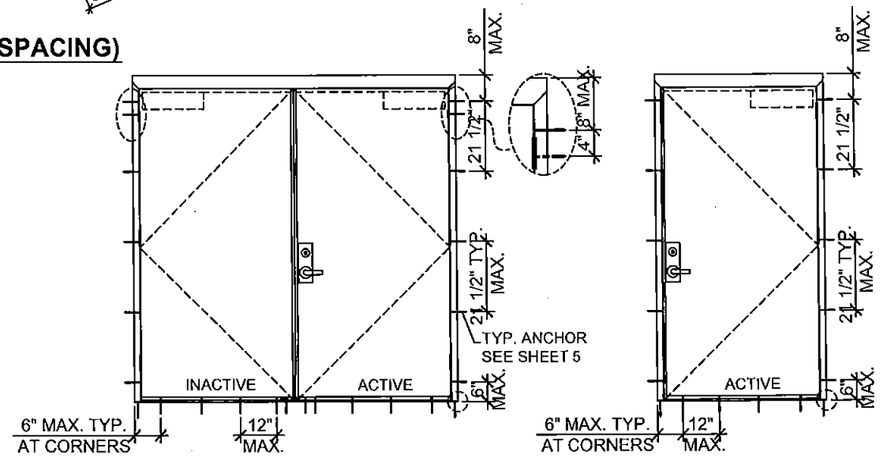

ANCHOR BRACKET TYPE B & C LAYOUT

SILL ANCHORS: (REFER TO ELEVATION FOR SPACING)

TYPE L — 1/4" DIA. ULTRACONS BY 'ELCO' (Fy=155 KSI Fu = 177 KSI)
DIRECTLY INTO fc'=3000 PSI CONCRETE
1-1/2" EMBED INTO CONCRETE, 2-1/2" MIN. EDGE DISTANCE

TYPE A — 5/16" DIA. ULTRACONS BY 'ELCO' (Fy=155 KSI Fu = 177 KSI)
DIRECTLY INTO fc'=3000 PSI CONCRETE
1-3/4" EMBED INTO CONCRETE, 2-3/16" MIN. EDGE DISTANCE

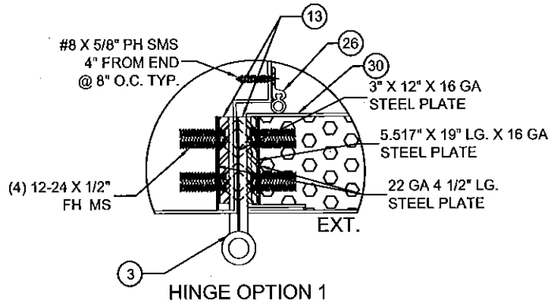

HINGE OPTION 1
BB5 BALL BEARING HINGE

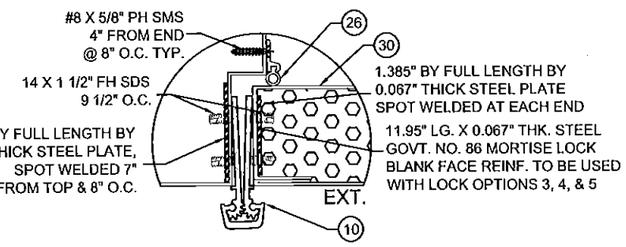

HINGE OPTION 2
CONTINUOUS GEARED HINGE

Approved as complying with the Florida Building Code
Date 7/16/15
NOA# 14-1021.03
Miami Dade Product Control
By

YIPING WANG, P.E.
FLORIDA REGISTRATION
PE #55983
C.A.N. 28677

MIAMI DADE COUNTY

JUL 01 2015

REVISIONS

NO	DATE	DESCRIPTION
1	6/26/15	PER MDC COMMENTS

MCY ENGINEERING, INC.
GLAZING CONSULTANTS
8501 SW 124 AVE. STE. 205A
MIAMI, FL 33183
P: 305.271.0117
F: 786.573.5063
MCY.Engineering@Att.net
www.MCYUS.com

N SERIES OUTSWING STEEL OPAQUE DOOR (18GA) - LMI & SMI

MESKER DOOR, LLC.
3440 STANDWOOD BLVD.
HUNTSVILLE, AL 35811
P: (256) 851 - 6670 F: (800) 503 - 1410

DATE	1/20/15
SCALE	AS SHOWN
DRAWN	Pedro
PROJECT	11-007

DRAWING NO.
AD14-19

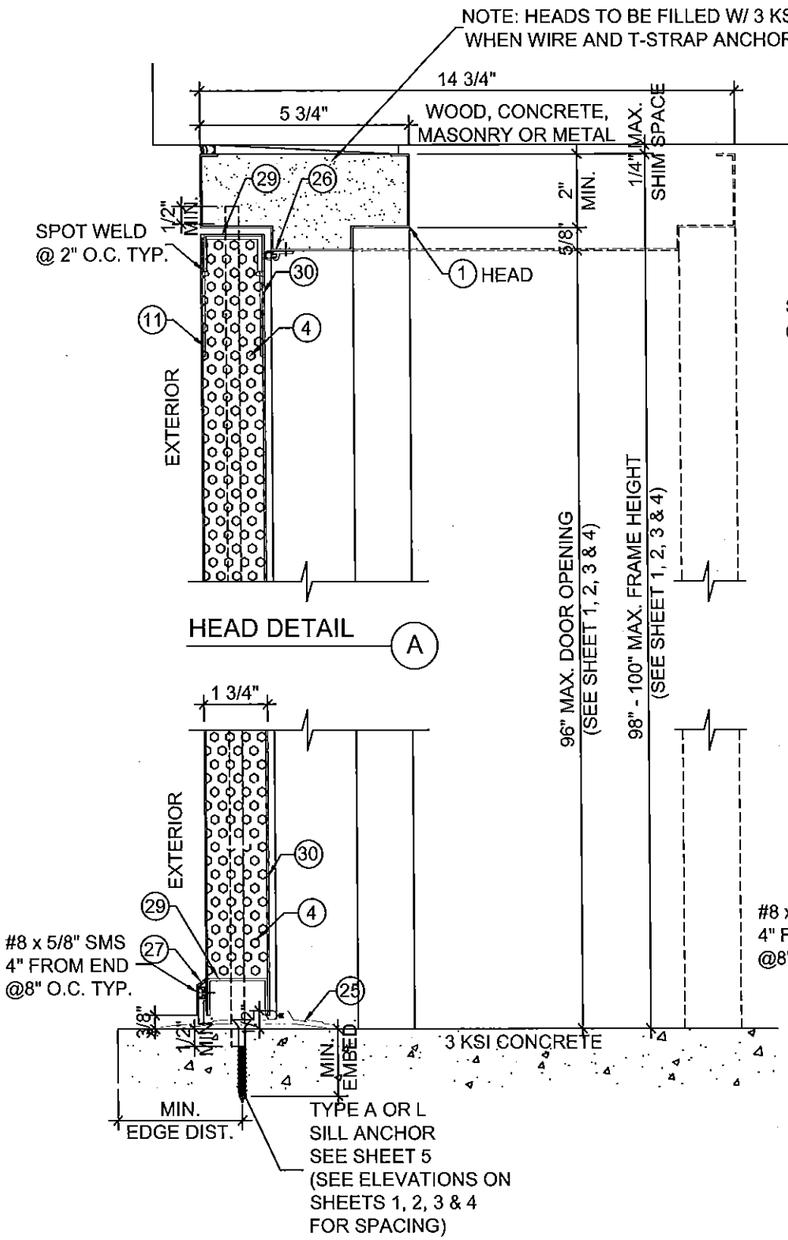

TYPICAL HANDICAP 1/2" BUMPER ADA
THRESHOLD #TH5P-ADA-MF-96
WATER RATED THRESHOLD (B)

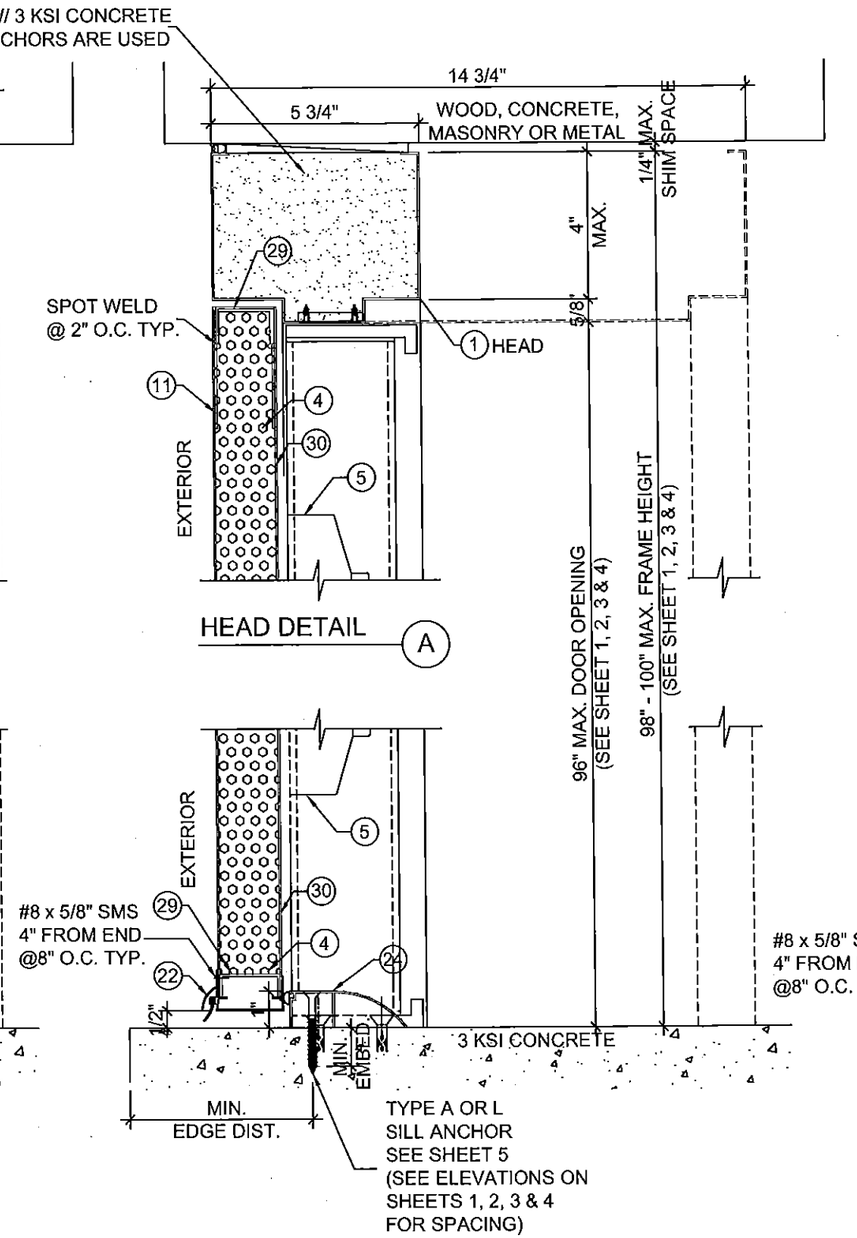

TYPICAL 1" BUMPER THRESHOLD
WATER RATED THRESHOLD (B)

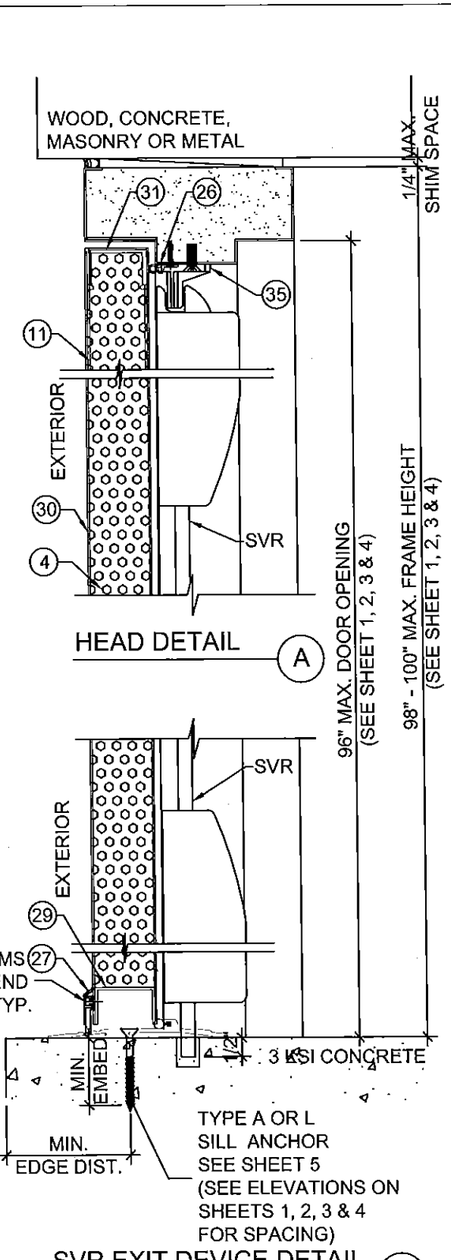

SVR EXIT DEVICE DETAIL (B)

Approved as complying with the
Florida Building Code
Date 7/16/15
NOA# 14-1021.03
Miami Dade Product Control
By

MIAMI DADE COUNTY

YIPING WANG, P.E.
FLORIDA REGISTRATION
PE #65983
C.A.N. 28677

REVISIONS		
NO	DATE	DESCRIPTION
1	6/26/15	PER MDC COMMENTS

MCY ENGINEERING, INC.
GLAZING CONSULTANTS
8501 SW 124 AVE. STE. 205A
MIAMI, FL 33183
P: 305.271.0117
F: 786.573.5063
www.MCYUS.com
MCY.Engineering@Att.net

N SERIES OUTSWING STEEL OPAQUE DOOR (18GA) - LMI & SMI

MESKER DOOR, LLC.
3440 STANDWOOD BLVD.
HUNTSVILLE, AL 35811
P: (256) 851 - 6670 F: (800) 503 - 1410

DATE	1/20/15
SCALE	AS SHOWN
DRAWN	Pedro
PROJECT	11-007

DRAWING NO.
AD14-19

6 OF 12

JUL 01 2015

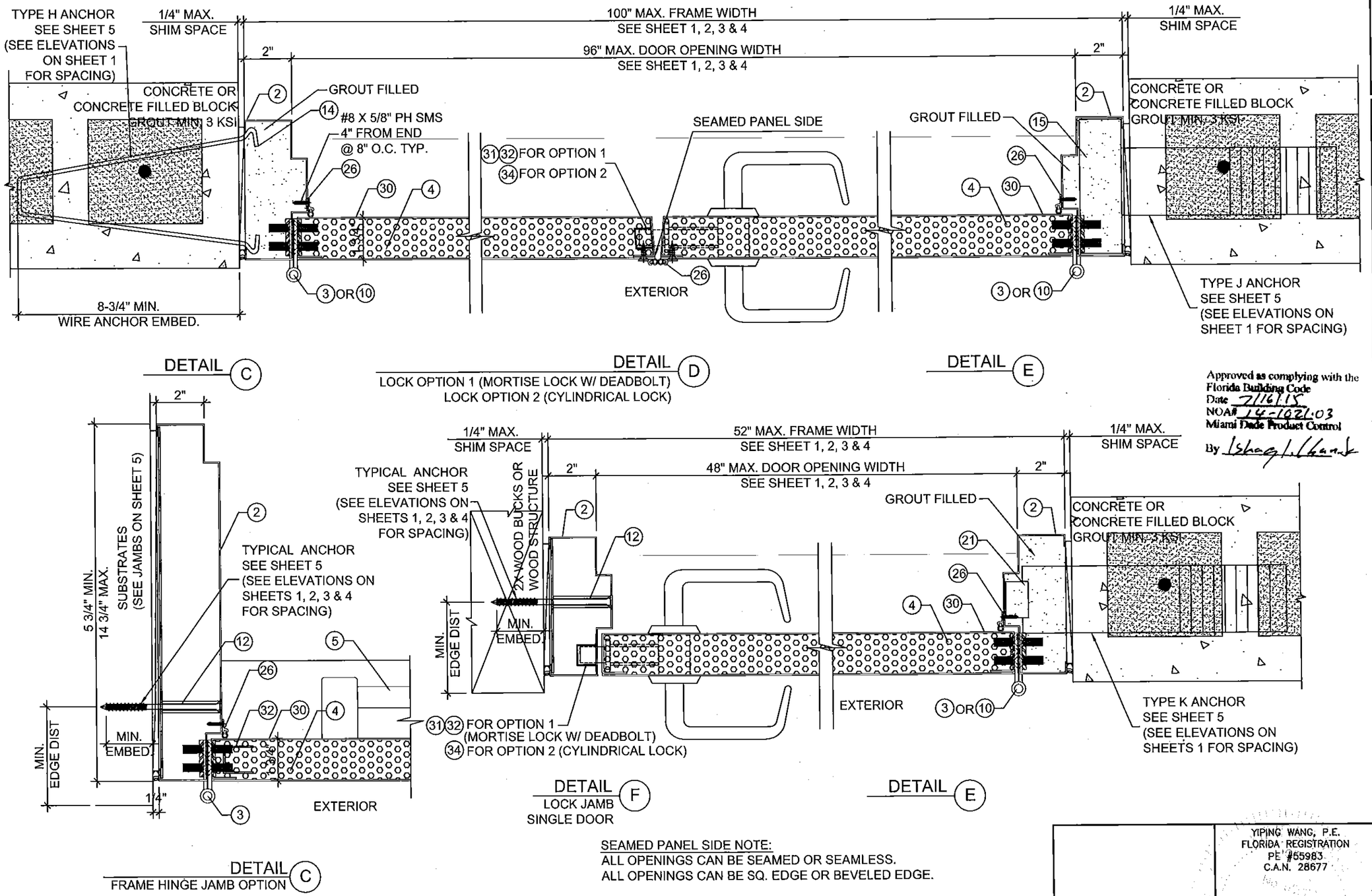

Approved as complying with the Florida Building Code
Date 7/16/15
NOA# 14-1021.03
Miami Dade Product Control
By Ishag I. Chanak

SEAMED PANEL SIDE NOTE:
ALL OPENINGS CAN BE SEAMED OR SEAMLESS.
ALL OPENINGS CAN BE SQ. EDGE OR BEVELED EDGE.

REVISIONS		
NO.	DATE	DESCRIPTION
1	6/28/15	PER REF COMMENTS

MCY ENGINEERING, INC.
GLAZING CONSULTANTS
8501 SW 124 AVE. STE. 205A
MIAMI, FL 33183
P: 305.271.0117
F: 786.573.5063
www.MCYUS.com
MCY.Engineering@Att.net

N SERIES OUTSWING STEEL OPAQUE DOOR (18GA) - LMI & SMI

MESKER DOOR, LLC.
3440 STANDWOOD BLVD.
HUNTSVILLE, AL 35811
P: (256) 851 - 6670 F: (800) 503 - 1410

YIPING WANG, P.E.
FLORIDA REGISTRATION
PE #55983
C.A.N. 28677

MIAMI DADE COUNTY

DATE	1/20/15
SCALE	AS SHOWN
DRAWN	Pedro
PROJECT	11-007

DRAWING NO.
AD14-19

JUL 01 2015

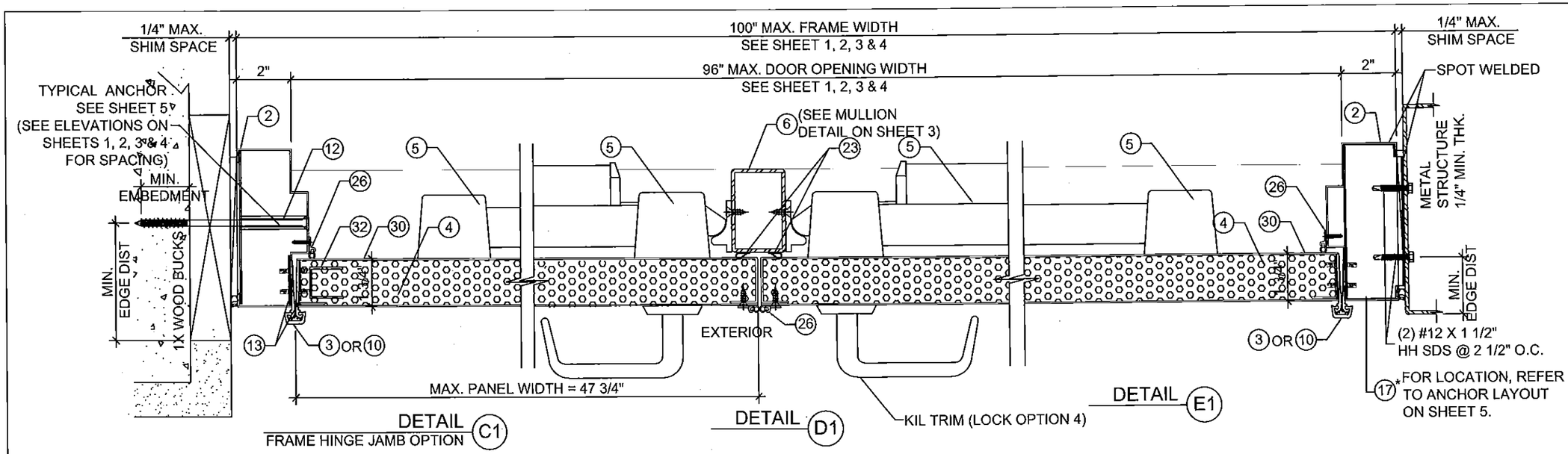

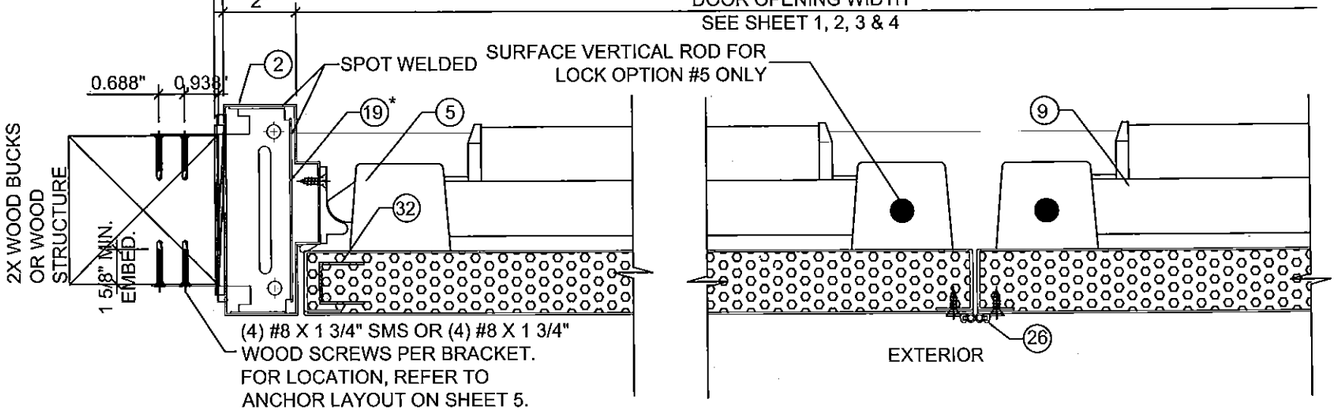

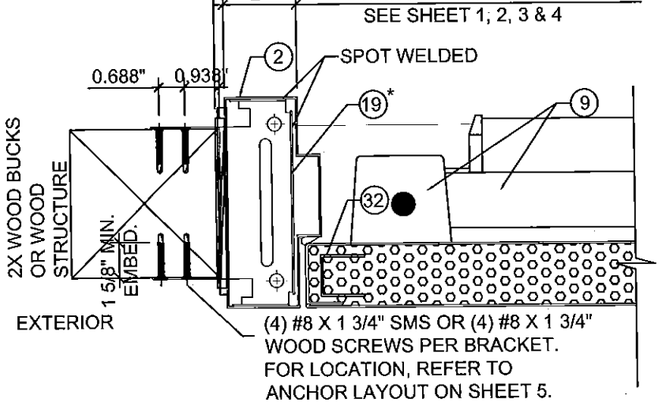

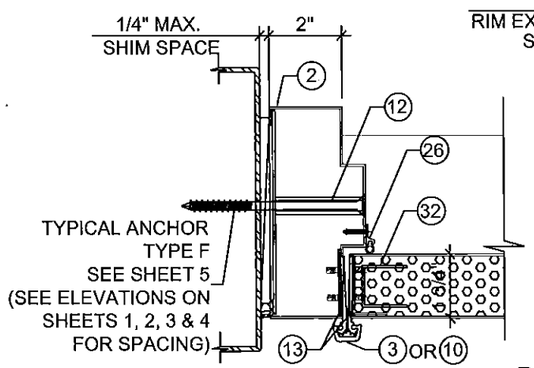

* **NOTE:**
WOOD OR STEEL STRUCTURAL MEMBERS OF WOOD AND STEEL-STUD WALLS MUST BE DESIGNED TO CARRY AT LEAST 271 LB/FT FOR DOORS RATED @ 65 PSF.

Approved as complying with the Florida Building Code
Date 7/16/15
NOA# 14-1021.03
Miami Dade Product Control
By Ishaq I. Chanda

YIPING WANG, P.E.
FLORIDA REGISTRATION
PE #55983
C.A.N. 28677

MIAMI DADE COUNTY

JUL 01 2015

REVISIONS		
NO	DATE	DESCRIPTION
1	6/28/15	PER RAI COMMENTS

MCY ENGINEERING, INC.
GLAZING CONSULTANTS
8501 SW 124 AVE. STE. 205A
MIAMI, FL 33183
P: 305.271.0117
F: 786.573.5063
MCY.Engineering@Att.net
www.MCYUS.com

N SERIES OUTSWING STEEL OPAQUE DOOR (18GA) - LMI & SMI

MESKER DOOR, LLC.
3440 STANDWOOD BLVD.
HUNTSVILLE, AL 35811
P: (256) 851 - 6670 F: (800) 503 - 1410

DATE	1/20/15
SCALE	AS SHOWN
DRAWN	Pedro
PROJECT	11-007

DRAWING NO.
AD14-19

LOCK OPTIONS

OPTION 1

ACTIVE DOOR HARDWARE CAN APPLY TO SINGLE DOORS
(EXTERIOR ELEVATIONS - OUTSWING DOORS)

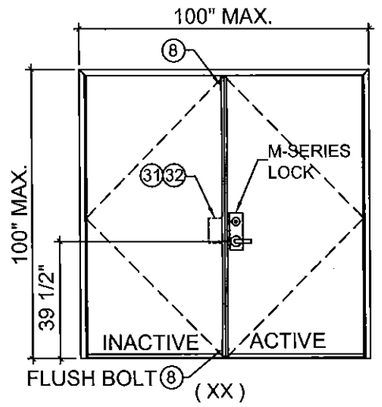

ACTIVE LEAF:
DESIGN HARDWARE M SERIES EXTRA HEAVY DUTY (GRADE 1) MORTISE LOCK WITH
(2) 8-32 X 1 1/8" FH MS
LATCH = SS 3/4" THROW, DEADBOLT = SS 1" THROW.

INACTIVE LEAF:
DESIGN HARDWARE UL-MFB-M FLUSH BOLTS WITH (4) 8 X 3/4" FH MULTI THREAD SCREWS, TOP AND BOTTOM,
FLUSH MOUNT METALLIC FLUSH BOLT GUIDE WITH (2) #8 X 3/4" FH THREAD SCREWS,
FLUSH MOUNT METALLIC STRIKE PLATE, WITH (2) 1/4" X 3/8" FH MS

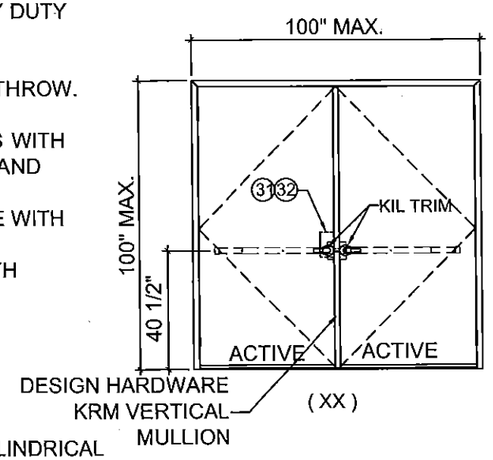

OPTION 2

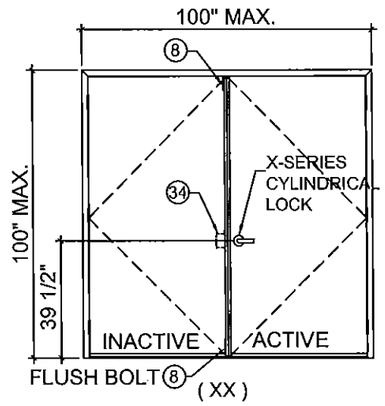

ACTIVE LEAF:
DESIGN HARDWARE X SERIES (GRADE 1) CYLINDRICAL LOCK, WITH (2) #8 X 3/4" FH THREAD SCREWS AND
(2) #10 X 1 9/16" FH MS.
LATCH = SS 1/2" THROW.

INACTIVE LEAF:
DESIGN HARDWARE UL-MFB-M FLUSH BOLTS, FLUSH MOUNT METALLIC FLUSH BOLT GUIDE, SURFACE MOUNT METALLIC STRIKE PLATE, WITH (4) #8 X 3/4" FH MULTI THREAD SCREWS, TOP AND BOTTOM

OPTION 3

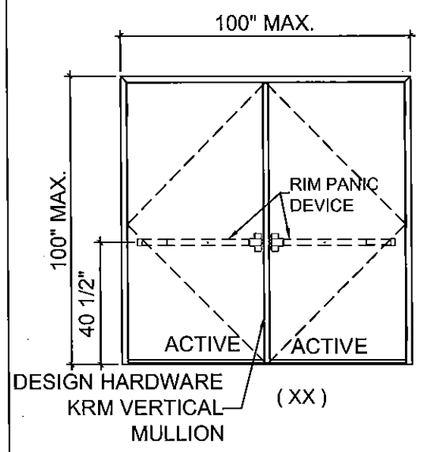

OPTION 3.A
ACTIVE LEAF / ACTIVE LEAF:
DESIGN HARDWARE 2000 SERIES STANDARD DUTY SURFACE MOUNT METALLIC RIM PANIC DEVICE WITH (6) 14 X 1 1/2" FH SDS
RIM PANIC LATCH AT LOCKS = 5/8" THROW.
ROLLER STRIKE WITH 5/8" PROJECTION & 1/8" SHIM.

WITH 2" X 3" X 1/8" THICK STEEL VERTICAL TUBE MULLION, Fy=36 KSI MIN.

OPTION 3.B
ACTIVE LEAF / ACTIVE LEAF:
DESIGN HARDWARE 1000 SERIES HEAVY DUTY SURFACE MOUNT METALLIC PANIC DEVICE WITH (5) 14 X 1 1/2" FH SDS.
ROLLER STRIKE WITH 5/8" PROJECTION & 1/8" SHIM.

WITH 2" X 3" X 1/8" THICK STEEL VERTICAL TUBE MULLION, Fy=36 KSI MIN.

OPTION 4

OPTION 4.A
ACTIVE LEAF / ACTIVE LEAF:
DESIGN HARDWARE 2000 SERIES STANDARD DUTY SURFACE MOUNT METALLIC PANIC DEVICE WITH DESIGN KIL TRIM,
WITH (4) 14 X 1 1/2" FH SDS, HANDLE WITH (2) #8-36 X 1 1/2" PH MS

WITH 2" X 3" X 1/8" THICK STEEL VERTICAL TUBE MULLION, Fy=36 KSI MIN.

OPTION 4.B
ACTIVE LEAF / ACTIVE LEAF:
DESIGN HARDWARE 1000 SERIES HEAVY DUTY SURFACE MOUNT METALLIC PANIC DEVICE WITH WITH DESIGN KIL TRIM WITH (5) 14 X 1 1/2" FH SDS, HANDLE WITH (2) #8-36 X 1 1/2" PH MS

WITH 2" X 3" X 1/8" THICK STEEL VERTICAL TUBE MULLION, Fy=36 KSI MIN.

OPTION 5

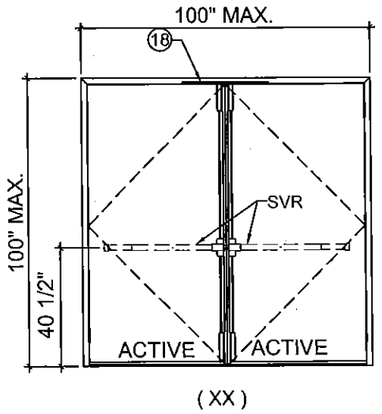

OPTION 5.A
ACTIVE LEAF / ACTIVE LEAF:
DESIGN HARDWARE 2000 SERIES STANDARD DUTY (GRADE 1) SVR SURFACE MOUNT METALLIC 2 POINT LOCK SYSTEM WITH PANIC DEVICE AND VERTICAL RODS ON INTERIOR WITH (6) 1/4"-20 X 3/4 PH SMS AND (6) 14-20 X 3/4" FH MS.
TOP STRIKE WITH (3) 1/4"-20P X 3/4" FH MS.

OPTION 5.B
ACTIVE LEAF / ACTIVE LEAF:
DESIGN HARDWARE 1000 SERIES HEAVY DUTY (GRADE 1) SVR SURFACE MOUNT METALLIC PANIC DEVICE WITH (2) 14-20 PH MS AND (4) 14 X 1 1/4" FH SMS, VERTICAL ROD AT TOP AND BOTTOM (2) 14 X 1 1/2" FH SDS.
TOP STRIKE WITH (3) 1/4"-20P X 3/4" FH MS.

NOTE:
CONTINUOUS HINGE OR BB5 HINGE ACCEPTABLE ON ALL OPTIONS.
FOR PANEL HINGE OPTIONS, SEE SHEET 5.
FOR DOOR EDGE AND EDGE SEAM OPTIONS SEE SHEET 4.

Approved as complying with the Florida Building Code
Date 7/16/15
NOA# 14-1021.03
Miami Dade Product Control
By

MIAMI DADE COUNTY

YIPING WANG, P.E.
FLORIDA REGISTRATION
PE #55983
C.A.N. 28677

REVISIONS

NO	DATE	DESCRIPTION
1	6/28/15	PER RFI COMMENTS

MCY ENGINEERING, INC.
GLAZING CONSULTANTS
8501 SW 124 AVE. STE. 205A
MIAMI, FL 33183
P: 305.271.0117
F: 786.573.5063
www.MCYUS.com
MCY.Engineering@Att.net

N SERIES OUTSWING STEEL OPAQUE DOOR (18GA) - LMI & SMI

MESKER DOOR, LLC.
3440 STANDWOOD BLVD.
HUNTSVILLE, AL 35811
P: (256) 851 - 6670 F: (800) 503 - 1410

DATE	1/20/15
SCALE	AS SHOWN
DRAWN	Pedro
PROJECT	11-007

DRAWING NO.
AD14-19

JUL 01 2015

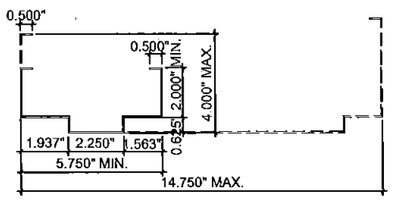

1 FRAME HEAD OPTION (16 GA 0.060")

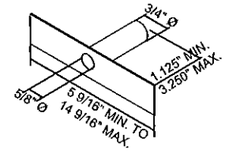

12 TUBE ANCHOR (PF-10) TYPE A (16 GA 0.060")

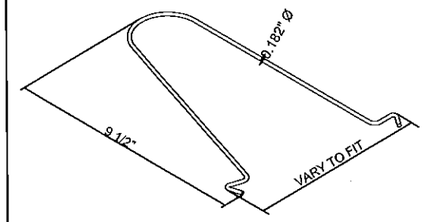

14 WIRE ANCHOR (PF-1) TYPE H (0.182" Ø) Fy=60 KSI MIN.

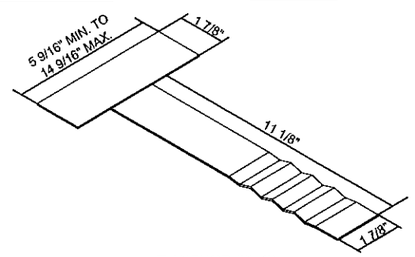

15 T ANCHOR (PF-2) TYPE J (16 GA 0.060")

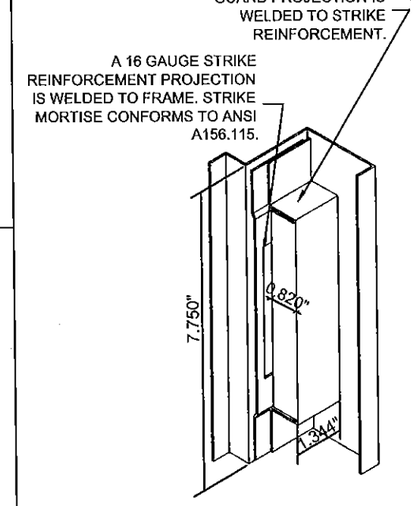

33 "U" STRIKE MORTISE (ASA STRIKE) 21 GA (0.032")

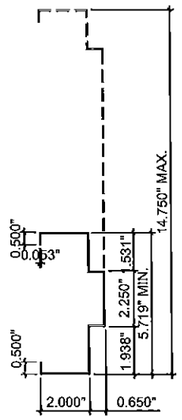

2 JAMB 16 GA (0.060")

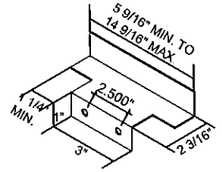

17 Z ANCHOR METAL STUD (PF-9) TYPE B (16 GA 0.060")

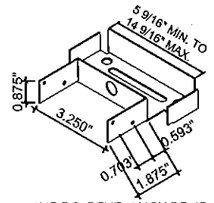

19 WOOD STUD ANCHOR (F-25) TYPE C (18 GA 0.048")

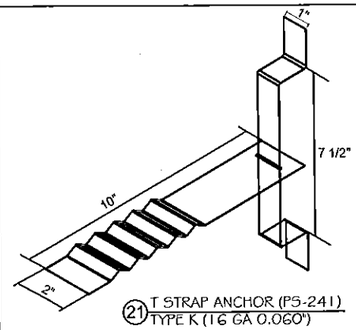

21 T STRAP ANCHOR (PS-241) TYPE K (16 GA 0.060")

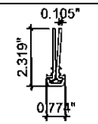

10 CONTINUOUS HINGE 6063-T6

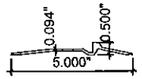

25 HANDICAP 1/2" BUMPER ADA THRESHOLD 6063-T5 ALUM.

27 DOOR SWEEPS 6063-T5 ALUM.

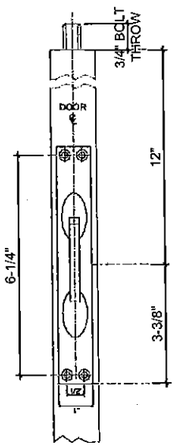

8 FLUSH BOLTS

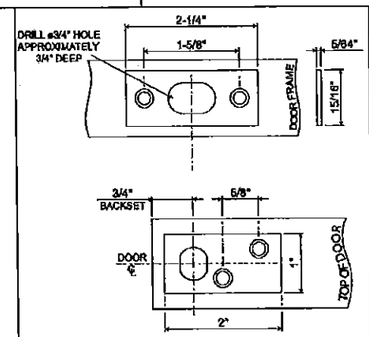

8 FLUSH BOLT STRIKE PLATES

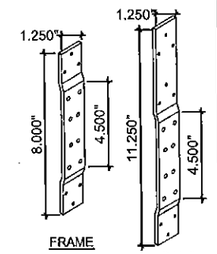

13 HINGE REINFORCEMENT STEEL 8 GA (0.170")

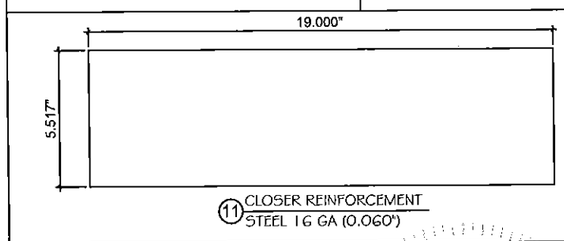

11 CLOSER REINFORCEMENT STEEL 16 GA (0.060")

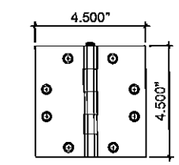

3 STEEL HINGE 0.134" THK. STEEL OR ST/ST

22 DOOR BOTTOM EXTENDER (OPT.)

26 PERIMETER SEAL 6063-T5 ALUM.

28 MEETING STILE ASTRAGAL

23 SELF-ADHESIVE WEATHER STRIP

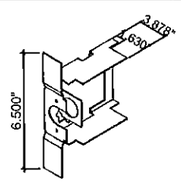

34 CYLINDRICAL LOCK PREPARATION 17 GA (0.054")

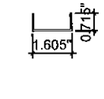

29 STEEL CHANNEL 20 GA. (0.036") FULL PANEL WIDTH

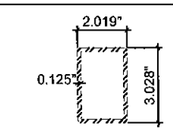

6 KRM REMOVABLE MULLION STEEL OR ST/ST Fy=36 KSI MIN.

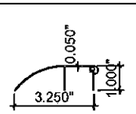

24 1" BUMPER THRESHOLD 6063-T5 ALUM.

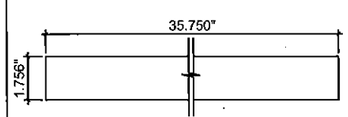

18 STEEL REINFORCEMENT 1.756" X 35 3/4" LG. 16 GA (0.067")

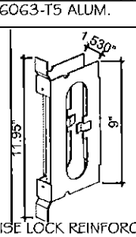

31 MORTISE LOCK REINFORCEMENT 16 GA (0.067") (DP-29)

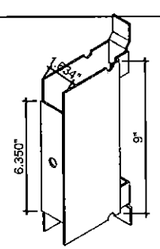

MORTISE LOCK (MBN) 32 REINFORCEMENT 14 GA (0.074") (DP-22)

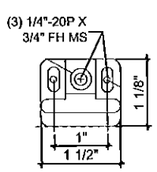

35 SVR TOP STRIKE

Approved as complying with the Florida Building Code
Date 7/16/15
NOA# 14-1021.03
Miami Dade Product Control
By Ichagi Chanda

MIAMI DADE COUNTY

YIPING WANG, P.E.
FLORIDA REGISTRATION
PE #55983
C.A.N. 28677

NO	DATE	DESCRIPTION
1	6/26/15	PER RFI COMMENTS

MCY ENGINEERING, INC.
GLAZING CONSULTANTS
8501 SW 124 AVE. STE. 205A
MIAMI, FL 33183
P: 305.271.0117
F: 786.573.5063
www.MCYUS.com
MCY.Engineering@Att.net

N SERIES OUTSWING STEEL OPAQUE DOOR (18GA) - LMI & SMI

MESKER DOOR, LLC.
3440 STANDWOOD BLVD.
HUNTSVILLE, AL 35811
P: (256) 851 - 6670 F: (800) 503 - 1410

DATE	1/20/15
SCALE	AS SHOWN
DRAWN	Pedro
PROJECT	11-007

DRAWING NO. AD14-19

10 OF 12

JUL 01 2015

BILL OF MATERIALS

ITEM	PART NO.	MATERIAL	QTY.	DESCRIPTION	MANUFACTURER / SUPPLIER / REMARKS
1	-	STEEL OR ST / ST	AS REQD.	FRAME JAMB / HEAD (5 3/4" X 2" OR 5 3/4" X 4" UP TO 14 3/4" DEEP)	MESKER DOOR 16 GA.(0.060" MIN.) Fy=40.8 KSI MIN.
2	-	STEEL OR ST / ST	AS REQD.	JAMB	MESKER DOOR 16 GA.(0.060" MIN.) Fy=40.8 KSI MIN.
3	BB5	STEEL OR ST/ST	AS REQD.	STANDARD WEIGHT BALL BEARING HINGES	DESIGN HARDWARE
4	-	POLYSTYRENE	AS REQD.	POLYSTYRENE CORE PER CURRENT NOA	CELLOFOAM, BONDED TO INSIDE OF PANEL
5	2000, 1000	STEEL OR ST/ST	AS REQD.	2000 RIM PANIC DEVIES 1000 SERIES OPTIONAL	DESIGN HARDWARE
6	KRM	STEEL OR ST/ST	1	KEY REMOVABLE MULLION	DESIGN HARDWARE
7	-	STEEL	1	X SERIES LOCK (1/2" OR 3/4")	DESIGN HARDWARE
8	UL-MFB-M	CAST BRASS	2	MANUAL FLUSH BOLT	DESIGN HARDWARE
9	2000, 1000	STEEL OR ST/ST	AS REQD.	2000-V EXIT DEVICES 1000-V SERIES OPTIONAL	DESIGN HARDWARE
10	-	ALUM. 6063-T6	AS REQD.	CONTINUOUS GEARED HINGE	DESIGN HARDWARE
11	-	STEEL	-	FRAME REINFORCEMENT	MESKER DOOR 16 GA. (0.060" MIN.) HOT MELT PUR GLUE
12	TYPE A , PF-10	STEEL	AS REQD.	TUBE ANCHORS	MESKER DOOR 16 GA.(0.060" MIN.) SPOT WELDED TO FRAME
13	-	STEEL OR ST/ST	AS REQD.	HINGE REINFORCEMENT	MESKER DOOR 7 GA (0.170" MIN.)
14	TYPE H, PF-1	STEEL	AS REQD.	WIRE ANCHORS	MESKER DOOR 0.182ø
15	TYPE J, PF-2	STEEL	AS REQD.	T ANCHORS	MESKER DOOR 16 GA.(0.060" MIN.) TWISTED INTO FRAME
16	-	STEEL OR ST/ST	AS REQD.	13/16" X 1 3/4" X .118" THK. STEEL PLATE	MESKER DOOR
17	TYPE F, PF-9	STEEL	AS REQD.	Z ANCHORS (METAL STUD)	MESKER DOOR 16 GA.(0.060" MIN.) SPOT WELDED TO FRAME
18	-	STEEL OR ST/ST	AS REQD.	STEEL REINFORCEMENT 1.756" X 35 3/4"	MESKER DOOR 16 GA (0.060" MIN.) SPOT WELDED 14" O.C.
19	TYPE D, PF-6	STEEL	AS REQD.	WOOD STUD ANCHOR	MESKER DOOR 18 GA (0.048" MIN.)
20	-	STEEL	AS REQD.	M SERIES MORTISE LOCK W/ DEADBOLT	DESIGN HARDWARE
21	TYPE K, PS-241	STEEL	AS REQD.	T STRAP ANCHORS	MESKER DOOR 16 GA.(0.060" MIN.) SPOT WELDED TO FRAME
22	95WH	ALUM. 6063-T5	AS REQD.	DOOR BOTTOM EXTENDER	NATIONAL GUARD PRODUCTS
23	SS-S	RUBBER	AS REQD.	SELF ADHESIVE WEATHERSTRIP	DESIGN HARDWARE
24	646	ALUM. 6063-T5	1	1" BUMPER THRESHOLD	DESIGN HARDWARE
25	#TH5P-ADA-MF-96	ALUM. 6063-T5	1	HANDICAP 1/2" BUMPER THRESHOLD	DESIGN HARDWARE
26	PS-V	ALUM. 6063-T5	AS REQD.	PERIMETER SEAL - VINYL BULB	DESIGN HARDWARE
27	SW-R	ALUM. 6063-T5	AS REQD.	DOOR SWEEPS	DESIGN HARDWARE
28	-	-	AS REQD.	WEATHER STRIP AT MEETING STILE ASTRAGAL - OPTIONAL	DESIGN HARDWARE
29	-	STEEL OR ST/ST	AS REQD.	0.715" X 1.605" X 0.715" STEEL CHANNEL (DOOR PANEL WIDTH)	MESKER DOOR 20 GA (0.036" MIN) SINGLE ROW OF SPOT WELDS 2" O.C.
30	-	STEEL OR ST/ST	AS REQD.	DOOR PANEL	MESKER DOOR 18 GA (0.048" MIN.) SPOT WELDED AT EACH END
31	DP-29	STEEL OR ST/ST	AS REQD.	MORTISE LOCK REINFORCEMENT	MESKER DOOR 16 GA (0.060" MIN.) SPOT WELDED AT EACH END
32	DP-22	STEEL OR ST/ST	AS REQD.	MORTISE LOCK (MBN) REINFORCEMENT	MESKER DOOR 14 GA (0.074" MIN.) SPOT WELDED AT EACH END
33	FP-9	STEEL OR ST/ST	AS REQD.	"U" STRIKE MORTISE (ASA STRIKE)	MESKER DOOR 21 GA (0.032" MIN.)
34	DP-23	STEEL OR ST/ST	AS REQD.	CYLINDRICAL LOCK PREPARATION	MESKER DOOR 17 GA (0.054" MIN.) SPOT WELDED AT EACH END
35	-	STEEL OR ST/ST	AS REQD.	SVR TOP STRIKE	DESIGN HARDWARE

Approved as complying with the
Florida Building Code
Date 7/16/15
NOA 14-1021.03
Miami Dade Product Control
By Ishaq I. Chanda

YIPING WANG, P.E.
FLORIDA REGISTRATION
PE #55983
C.A.N. 28677

MIAMI DADE COUNTY

JUL 01 2015

REVISIONS

NO	DATE	DESCRIPTION
1	6/26/15	PER REC COMMENTS

MCY ENGINEERING, INC.
GLAZING CONSULTANTS
8501 SW 124 AVE. STE. 205A
MIAMI, FL 33183
P: 305.271.0117
F: 786.573.5063
www.MCYUS.com
MCY.Engineering@Att.net

N SERIES OUTSWING STEEL OPAQUE DOOR (18GA) - LMI & SMI

MESKER DOOR, LLC.
3440 STANDWOOD BLVD.
HUNTSVILLE, AL 35811
P: (256) 851 - 6670 F: (800) 503 - 1410

DATE	1/20/15
SCALE	AS SHOWN
DRAWN	Pedro
PROJECT	11-007

DRAWING NO.
AD14-19

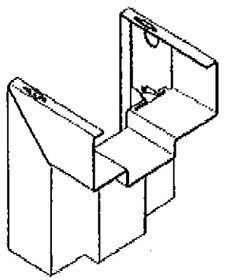

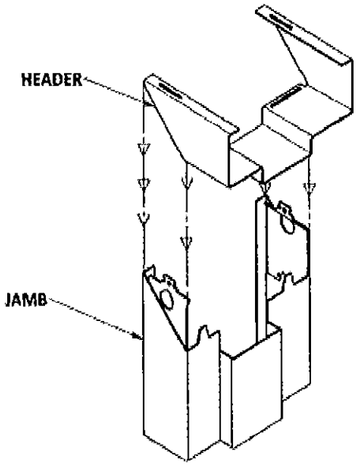

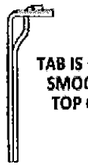

SECTION THRU TAB

CORNER ASSEMBLY

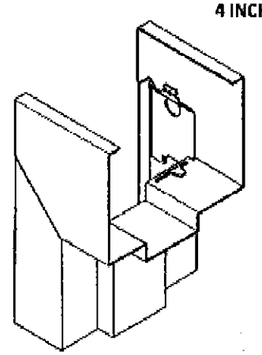

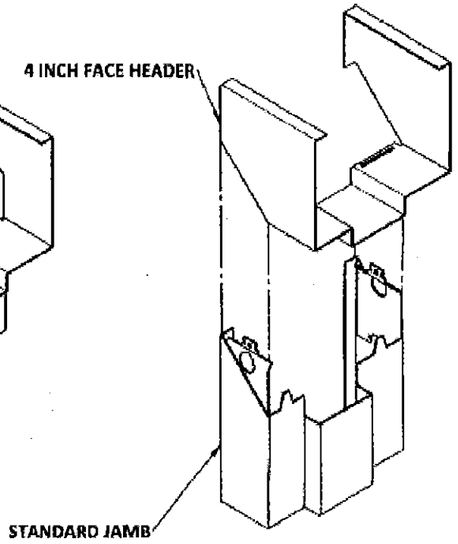

CORNER ASSEMBLY

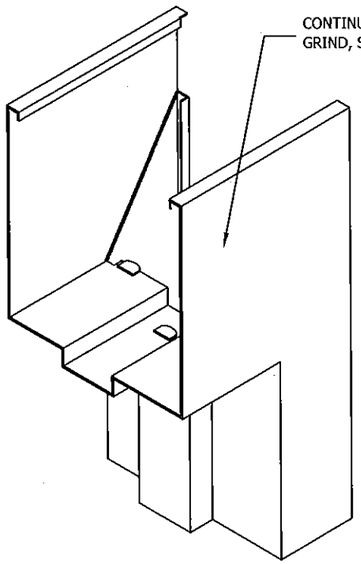

CORNER ASSEMBLY

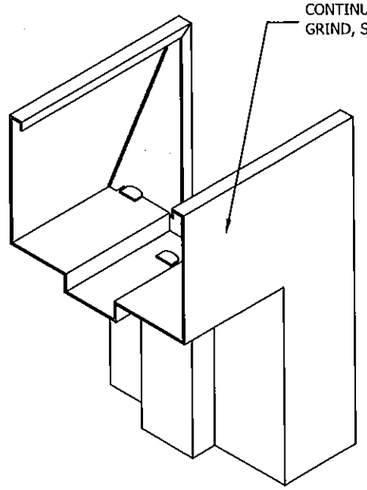

CORNER ASSEMBLY

Approved as complying with the
Florida Building Code
Date July 16, 2015
NOA# 14-1021.03
Miami Dade Product Control
By Yiping L. Chang

MIAMI DADE COUNTY

YIPING WANG, P.E.
FLORIDA REGISTRATION
PE. #55983
C.A.N. 28677

STATE OF FLORIDA

JUL 01 2015

REVISIONS		
NO	DATE	DESCRIPTION
1	6/26/15	PER RFI COMMENTS

MCY ENGINEERING, INC.
GLAZING CONSULTANTS
8501 SW 124 AVE. STE. 205A
MIAMI, FL 33183
P: 305.271.0117
F: 786.573.5063
www.MCYUS.com
MCY.Engineering@Att.net

N SERIES OUTSWING STEEL OPAQUE DOOR (18GA) - LMI & SMI

MESKER DOOR, LLC.
3440 STANDWOOD BLVD.
HUNTSVILLE, AL 35811
P: (256) 851 - 6670 F: (800) 503 - 1410

DATE	1/20/15
SCALE	AS SHOWN
DRAWN	Pedro
PROJECT	11-007

DRAWING NO.
AD14-19