MIAMI-DADE COUNTY
DEPARTMENT OF REGULATORY AND ECONOMIC RESOURCES (RER)
BOARD AND CODE ADMINISTRATION DIVISION

MIAMI-DADE COUNTY
PRODUCT CONTROL SECTION
11805 SW 26 Street, Room 208
Miami, Florida 33175-2474
T (786) 315-2590 F (786) 315-2599
www.miamidade.gov/economy

NOTICE OF ACCEPTANCE (NOA)

BHP, Inc. (dba Global Power Components)
6682 W. Greenfield Avenue
West Allis, WI 53214

SCOPE:
This NOA is being issued under the applicable rules and regulations governing the use of construction materials. The documentation submitted has been reviewed and accepted by Miami-Dade County RER- Product Control Section to be used in Miami Dade County and other areas where allowed by the Authority Having Jurisdiction (AHJ).

This NOA shall not be valid after the expiration date stated below. The Miami-Dade County Product Control Division (In Miami Dade County) and/or the AHJ (in areas other than Miami Dade County) reserve the right to have this product or material tested for quality assurance purposes. If this product or material fails to perform in the accepted manner, the manufacturer will incur the expense of such testing and the AHJ may immediately revoke, modify, or suspend the use of such product or material within their jurisdiction. RER reserves the right to revoke this acceptance, if it is determined by Miami-Dade County Product Control Section that this product or material fails to meet the requirements of the applicable building code.

This product is approved as described herein, and has been designed to comply with the High Velocity Hurricane Zone of the Florida Building Code.

DESCRIPTION: (Emergency Standby Generator Enclosure) Air Handler Unit

APPROVAL DOCUMENT: Drawing No. 14-1692, titled " Generator Enclosure ", sheets 1 through 13 of 13, prepared by Engineering Express, dated 10/06/2014, last revision dated 10/26/2015, signed and sealed by Frank L. Bennardo, P.E. on 11/11/2015, bearing the Miami-Dade County Product Control Approval stamp with the Notice of Acceptance number and the approval date by the Miami-Dade County Product Control Section.

MISSILE IMPACT RATING: Large and Small Missile Impact Resistant

LABELING: Each unit shall bear a permanent label with the manufacturer's name or logo, city, state and the following statement: "Miami-Dade County Product Control Approved", unless otherwise noted herein.

RENEWAL of this NOA shall be considered after a renewal application has been filed and there has been no change in the applicable building code negatively affecting the performance of this product.

TERMINATION of this NOA will occur after the expiration date or if there has been a revision or change in the materials, use, and/or manufacture of the product or process. Misuse of this NOA as an endorsement of any product, for sales, advertising or any other purposes shall automatically terminate this NOA. Failure to comply with any section of this NOA shall be cause for termination and removal of NOA.

ADVERTISEMENT: The NOA number preceded by the words Miami-Dade County, Florida, and followed by the expiration date may be displayed in advertising literature. If any portion of the NOA is displayed, then it shall be done in its entirety.

INSPECTION: A copy of this entire NOA shall be provided to the user by the manufacturer or its distributors and shall be available for inspection at the job site at the request of the Building Official.

This NOA consists of this page 1, evidence submitted page E-1 as well as approval document mentioned above. The submitted documentation was reviewed by **Helmy A. Makar, P.E., M.S.**

MIAMI-DADE COUNTY APPROVED

01/06/2016

NOA No. 14-1021.06
Expiration Date: 12/24/2020
Approval Date: 12/24/2015

BHP, Inc. (dba Global Power Components)

NOTICE OF ACCEPTANCE: EVIDENCE SUBMITTED

A. DRAWINGS

1. *Drawing No. 14-1692, titled " Generator Enclosure ", sheets 1 through 13 of 13, prepared by Engineering Express, dated 10/06/2014, last revision dated 10/26/2015, signed and sealed by Frank L. Bennardo, P.E. on 11/11/2015.*

B. TESTS

1. *Test reports on 1) Uniform Static Air Pressure Test, Loading per FBC TAS 202-94*
   2) Large Missile Impact Test per FBC, TAS 201-94
   3) Cyclic Wind Pressure Loading per FBC, TAS 203-94
   along with marked-up drawings and installation diagram of Air Handling Unit, prepared by Blackwater Testing Inc., Test Report No. ***BT-GPC-13-001(A)****, dated March 25, 2014, signed and sealed by Yamil Gerardo Kuri, P.E.*
2. *Test reports on 1) Uniform Static Air Pressure Test, Loading per FBC TAS 202-94*
   2) Large Missile Impact Test per FBC, TAS 201-94
   3) Cyclic Wind Pressure Loading per FBC, TAS 203-94
   along with marked-up drawings and installation diagram of Air Handling Unit, prepared by Blackwater Testing Inc., Test Report No. ***BT-GPC-13-001(B)****, dated March 25, 2014, signed and sealed by Yamil Gerardo Kuri, P.E.*
3. *Test reports on 1) Uniform Static Air Pressure Test, Loading per FBC TAS 202-94*
   2) Large Missile Impact Test per FBC, TAS 201-94
   along with marked-up drawings and installation diagram of Air Handling Unit, prepared by Blackwater Testing Inc., Test Report No. ***BT-GPC-13-001(C)****, dated March 25, 2014, signed and sealed by Yamil Gerardo Kuri, P.E.*

C. CALCULATIONS

1. *Calculation prepared by Engineering Express, dated 10/01/14, sheets 1 through 43 of 43, signed & sealed Frank L. Bennardo, P.E.*
2. *Calculation prepared by Engineering Express, dated 09/15/15, sheets 1 through 7 of 7, signed & sealed Frank L. Bennardo, P.E.*

D. QUALITY ASSURANCE

1. *By Miami-Dade County Department of Regulatory and Economic Resources (RER).*

E. MATERIAL CERTIFICATIONS

1. *None.*

Helmy A. Makar, P.E., M.S.
Product Control Section Supervisor
NOA No. 14-1021.06
Expiration Date: 12/24/2020
Approval Date: 12/24/2015

GLOBAL POWER COMPONENTS
STEEL GENERATOR ENCLOSURE WITH ALUMINUM SKIN

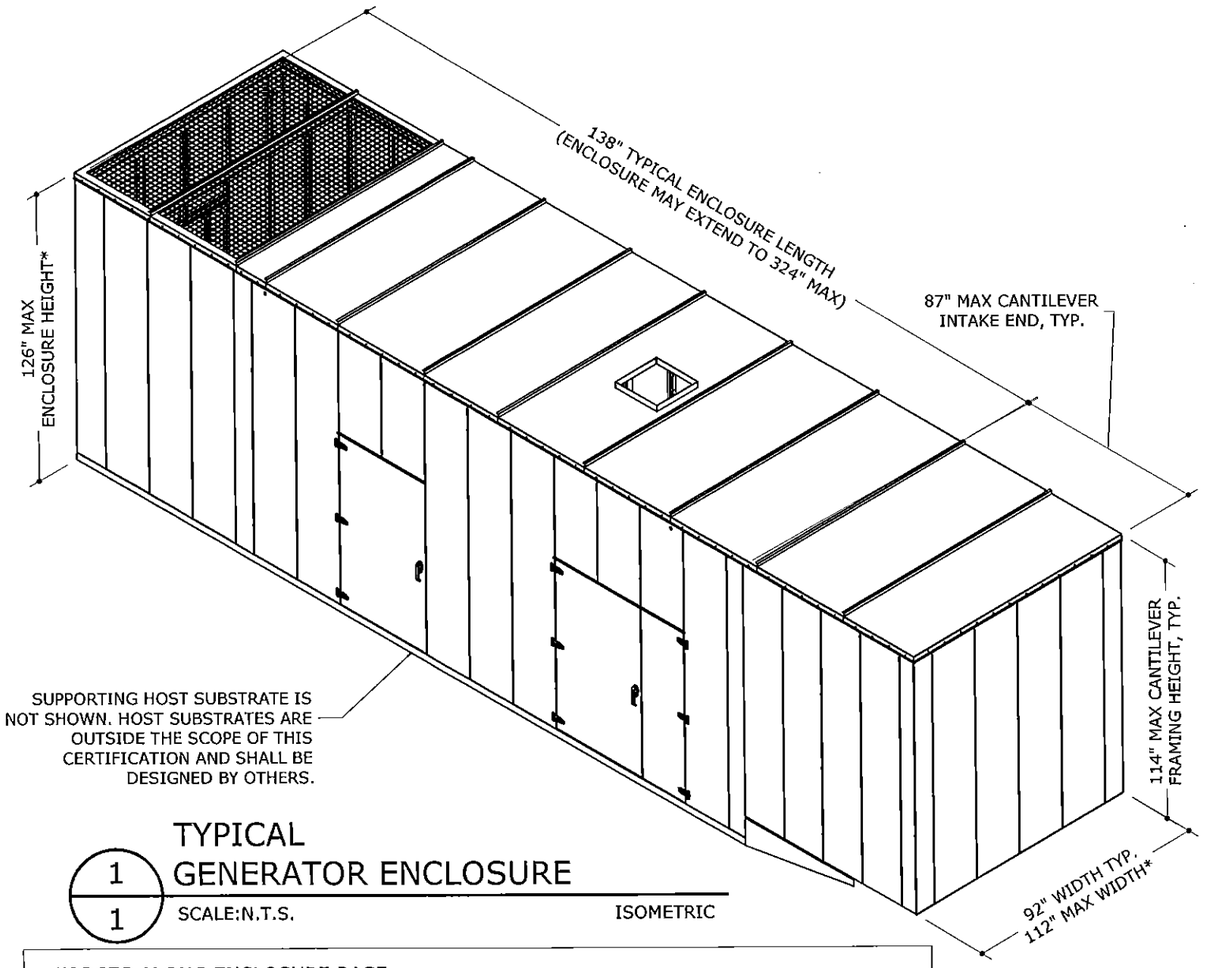

1/1 TYPICAL GENERATOR ENCLOSURE
SCALE:N.T.S. ISOMETRIC

FORCES ALONG ENCLOSURE BASE:
(TO BE UTILIZED FOR DESIGN OF SUPPORTING HOST STRUCTURE, BY OTHERS)

MAX ANCHOR POINT REACTIONS (SEE PLAN VIEW 2/3 FOR LOCATION OF ANCHOR POINTS):
- TENSION = 1414 LB/BOLT
- SHEAR = 933 LB/BOLT

TOTAL SYSTEM WEIGHT TO BE PROVIDED BY MANUFACTURER. FOR THE PURPOSE OF TIE-DOWN REACTIONS ILLUSTRATED HEREIN, A 15 PSF AVERAGE DEAD LOAD WAS USED AS AN APPROXIMATION FOR DEAD LOAD RESISTANCE AGAINST UPLIFT ONLY. THE ACTUAL WEIGHT OF THE ENCLOSURE AND IT'S MECHANICAL COMPONENTS MAY EXCEED 15 PSF AS PROVIDED BY GLOBAL POWER COMPONENTS BUT SHALL NOT BE ASSUMED TO BE LESS THAN 15 PSF. ALL SUPPORTING HOST STRUCTURES/SLAB SHALL BE CERTIFIED BY OTHERS.

*ENCLOSURE HEIGHT & WIDTH DIMENSION LIMITS:

MAX HEIGHT	= 126"
MIN HEIGHT	= 72"
MAX WIDTH	= 112"
MIN WIDTH	= 72"

RATIO OF MAX HEIGHT/WIDTH SHALL BE 1.3 MAXIMUM.

FOR EXAMPLE:

HEIGHT	WIDTH	RATIO
126"	112"	1.125
108"	96"	1.125
96"	74"	1.300

DESIGN NOTES:

THE WORK SPECIFIED HEREIN HAS BEEN DESIGNED IN ACCORDANCE WITH THE STRUCTURAL PROVISIONS OF THE HVHZ OF THE FBC FIFTH EDITION (2014) PER TAS 201/202/203. THIS ENCLOSURE IS INTENDED FOR USE WITHIN AND OUTSIDE THE HIGH VELOCITY HURRICANE ZONE. DESIGN FORCES ARE PER ASCE 7- 10 USING Vult=186 MPH (3-SECOND GUST), Vasd=144 MPH, EXPOSURE 'C', Kd=0.85, Kzt=1.0, Kz=TABLE 29.3-1, EVALUATED AS AN AT GRADE (15'-0" MAX MEAN ROOF HEIGHT) ENCLOSED STRUCTURE.

ENCLOSURE PRESSURES: ASD COMPONENTS & CLADDING WIND LOADS:
WALL WIND PRESSURE:
ZONE 4: +40.93/-44.38 PSF
ZONE 5:: +40.93/-46.15 PSF

ROOF WIND PRESSURE:
ZONE 1: +17.17/-44.01 PSF
ZONE 2: +17.17/-67.27 PSF
ZONE 3: +17.17/-92.30 PSF

ROOF LIVE LOAD:
+30.00 PSF

Approved as complying with the Florida Building Code
Date 12/24/15
NOA# 14-1921.06
Miami Dade Product Control
By

GENERAL NOTES:

1. THIS SYSTEM HAS BEEN DESIGNED AND SHALL BE FABRICATED IN ACCORDANCE WITH THE STRUCTURAL PROVISIONS OF THE FLORIDA BUILDING CODE FIFTH EDITION (2014) PER TAS 201/202/203 PER BLACKWATER TESTING, INC. REPORT #BT-GPC-13-001(A), #BT-GPC-13-001(B), #BT-GPC-13-001(C).
2. THE SYSTEM DETAILED HEREIN IS GENERIC AND ONLY PROVIDES INFORMATION FOR INSTALLATIONS AT LOCATIONS THAT CONFORM TO THE DESIGN CRITERIA AS LISTED ABOVE. APPLICABILITY AND ACCEPTANCE OF THE AFOREMENTIONED DESIGN CRITERIA FOR SITE SPECIFIC INSTALLATIONS SHALL BE APPROVED BY OTHERS. FOR SITE CONDITIONS DIFFERENT FROM THE CONDITIONS DETAILED HEREIN, A LICENSED ENGINEER OR REGISTERED ARCHITECT SHALL PREPARE SITE SPECIFIC DOCUMENTS FOR USE IN CONJUNCTION WITH THIS DOCUMENT.
3. THIS CERTIFICATION IS INTENDED TO CERTIFY THE STRUCTURAL CAPACITY AND INTEGRITY OF THE CERTIFICATION OF STRUCTURAL FRAMING MEMBERS, WALL AND ROOF SHEET METAL SKINS AND INTERNAL STRUCTURAL CONNECTIONS AS PER THE AFOREMENTIONED TEST REPORT. DESIGN OF THE GENERATOR ITSELF, MECHANICAL DESIGNS, ENERGY/ELECTRICAL CRITERIA, GENERATOR SLAB SUPPORT AND ALL NON-STRUCTURAL ITEMS SHALL BE BY OTHERS AND OUTSIDE THE SCOPE OF THIS CERTIFICATION. ADDITIONALLY, THE UNIT SHALL NOT BE INSTALLED IN A LOCATION SUSCEPTIBLE TO CHANNELING EFFECTS FROM UPWIND OBSTACLES.
4. PERMIT HOLDER SHALL VERIFY THE ADEQUACY OF THE EXISTING SUPPORTING HOST STRUCTURE TO WITHSTAND SUPERIMPOSED LOADS.
5. THE STEEL & ALUMINUM ENCLOSURE SHALL CONFORM TO THE DETAILS SHOWN HEREIN. ALL OTHER CONNECTIONS AND DETAILS NOT ILLUSTRATED IN THIS DOCUMENT SHALL CONFORM TO THE TYPICAL ASSEMBLY AS SET FORTH BY GLOBAL POWER COMPONENTS.
6. THE CONTRACTOR IS RESPONSIBLE TO INSULATE MEMBERS FROM DISSIMILAR MATERIALS TO PREVENT ELECTROLYSIS.
7. ALL STEEL FRAMING MEMBERS SHALL BE ASTM A653 OR ASTM 1010 STEEL WITH Fy=33KSI MIN & Fu=45KSI MIN.
8. ELECTRICAL GROUND, WHEN REQUIRED, TO BE DESIGNED & INSTALLED BY OTHERS. ALL MECHANICAL, ELECTRICAL, OR LIGHTING SPECIFICATIONS SHALL BE AS PER MANUFACTURER RECOMMENDATIONS OR BUILDING OFFICIAL REQUEST AND ARE THE EXPRESS RESPONSIBILITY OF THE CONTRACTOR. MANUFACTURER IS RESPONSIBLE FOR WIND OSCILLATIONS OR HARMONIC VIBRATIONS.
9. ALL FASTENERS TO BE #14 OR GREATER SAE GRADE 5 CADMIUM PLATED OR OTHERWISE CORROSION RESISTANT MATERIAL AND SHALL COMPLY WITH 5.1.1C, SPECIFICATIONS FOR ALUM. STRUCTURES -SECTION 1, THE ALUMINUM ASSOCIATION,INC., & APPLICABLE FEDERAL,STATE, AND LOCAL CODES.
10. FOR STEEL MEMBERS ALL ANCHORS SHALL BE SPACED WITH 3x DIAMETER MIN. SPACING TO ADJACENT ANCHORS AND 3x DIAMETER MIN. END DISTANCE. FOR ALUMINUM MEMBERS ALL ANCHORS SHALL BE SPACED WITH 2x DIAMETER END DISTANCE AND 2.5x DIAMETER MIN. SPACING TO ADJACENT ANCHORS, UNLESS NOTED OTHERWISE.
11. ALL CONCRETE ANCHORS SPECIFIED HEREIN SHALL BE INSTALLED PER MANUFACTURERS RECOMMENDATIONS. ANCHORS SHALL BE INSTALLED TO UN-CRACKED CONCRETE ONLY.
12. ALL EXTRUDED MEMBERS SHALL BE ALUMINUM ALLOY TYPE 6063-T5 OR BETTER. ALL ALUMINUM FORMED PANELS SHALL BE 3003-H14 MINIMUM ALUMINUM. ALL EXISTING CONCRETE SUBSTRATES SHALL HAVE A MINIMUM COMPRESSIVE STRENGTH OF 3000 PSI AS VERIFIED BY OTHERS UNLESS OTHERWISE NOTED.
13. ENGINEER SEAL AFFIXED HERETO VALIDATES STRUCTURAL DESIGN AS SHOWN ONLY. USE OF THIS SPECIFICATION BY CONTRACTOR, et. al. INDEMNIFIES & SAVES HARMLESS THIS ENGINEER FOR ALL COST & DAMAGES INCLUDING LEGAL FEES & APPELLATE FEES RESULTING FROM MATERIAL FABRICATION, SYSTEM ERECTION, CONSTRUCTION PRACTICES BEYOND THAT WHICH IS CALLED FOR BY LOCAL, STATE, & FEDERAL CODES & FROM DEVIATIONS OF THIS PLAN.
14. THE ROLE OF THIS ENGINEER FOR THIS PROJECT IS THAT OF SPECIALTY ENGINEER AND NOT THE ENGINEER OF RECORD. CONSEQUENTLY, THE ARCHITECT/ENGINEER OF RECORD SHALL BE RESPONSIBLE FOR THE INTEGRITY OF ALL SUPPORTING SURFACES TO THIS DESIGN WHICH SHALL BE COORDINATED BY THE PERMITTING CONTRACTOR.
15. EXCEPT AS EXPRESSLY PROVIDED HEREIN, NO ADDITIONAL CERTIFICATIONS OR AFFIRMATIONS ARE INTENDED.
16. ALL DIMENSIONS SHOWN HEREIN REPRESENT UNITS IN INCHES, UNLESS OTHERWISE NOTED.
17. ENCLOSURES SHALL BE PERMANENTLY LABELED WITH A MINIMUM OF ONE LABEL CONTAINING THE FOLLOWING:

GLOBAL POWER COMPONENTS
6682 W. GREENFIELD AVE , STE 102
WEST ALLIS, WI 53214
414-475-3000
MIAMI-DADE COUNTY PRODUCT CONTROL APPROVED

FRANK L. BENNARDO, P.E.
PE0046549
11/11/2015

ENGINEERING EXPRESS®
160 SW 12th AVENUE, #106
DEERFIELD BEACH, FL 33442
PH: (954) 354-0660 FAX: (954) 354-0443
WWW.ENGEXP.COM
CERT OF AUTH #9985
A. FRANK L. BENNARDO, P.E., INC. INNOVATION

BHP INC. / D.B.A. GLOBAL POWER COMPONENTS
6682 W. GREENFIELD AVE., STE. 102
WEST ALLIS, WI 53214
PH:(414) 475-3000

GLOBAL POWER COMPONENTS
GENERATOR ENCLOSURE
MIAMI DADE NOTICE OF ACCEPTANCE

REMARKS	DRWN	CHKD	DATE
INIT ISSUE	CSL	TSB	10-06-14
REV PER COMMENTS	TSB	FLB	10/26/15
-	-	-	-
-	-	-	-
-	-	-	-

THIS DOCUMENT IS THE PROPERTY OF ENGINEERING EXPRESS AND SHALL NOT BE REPRODUCED IN WHOLE OR PART WITHOUT WRITTEN CONSENT. ALL CHANGES OR REVISIONS TO THIS DRAWING SHALL BE IN WRITING AND ENGINEERING EXPRESS SHALL NOT BE RESPONSIBLE FOR ANY UNAUTHORIZED CHANGES TO OR USES OF THIS DOCUMENT ARE NOT PERMITTED AND INVALIDATE OUR CERTIFICATION.

COPYRIGHT ENGINEERING EXPRESS

14-1692
SCALE: -
PAGE DESCRIPTION:
-
-

1 OF 13

11/11/2015 - 12:55pm troyb V:\Projects\14-1692 Generator Enclosure Family - Miami-Dade NOA-Initial Submittal\WP\14-1692_I Generator Enclosure NOA.dwg

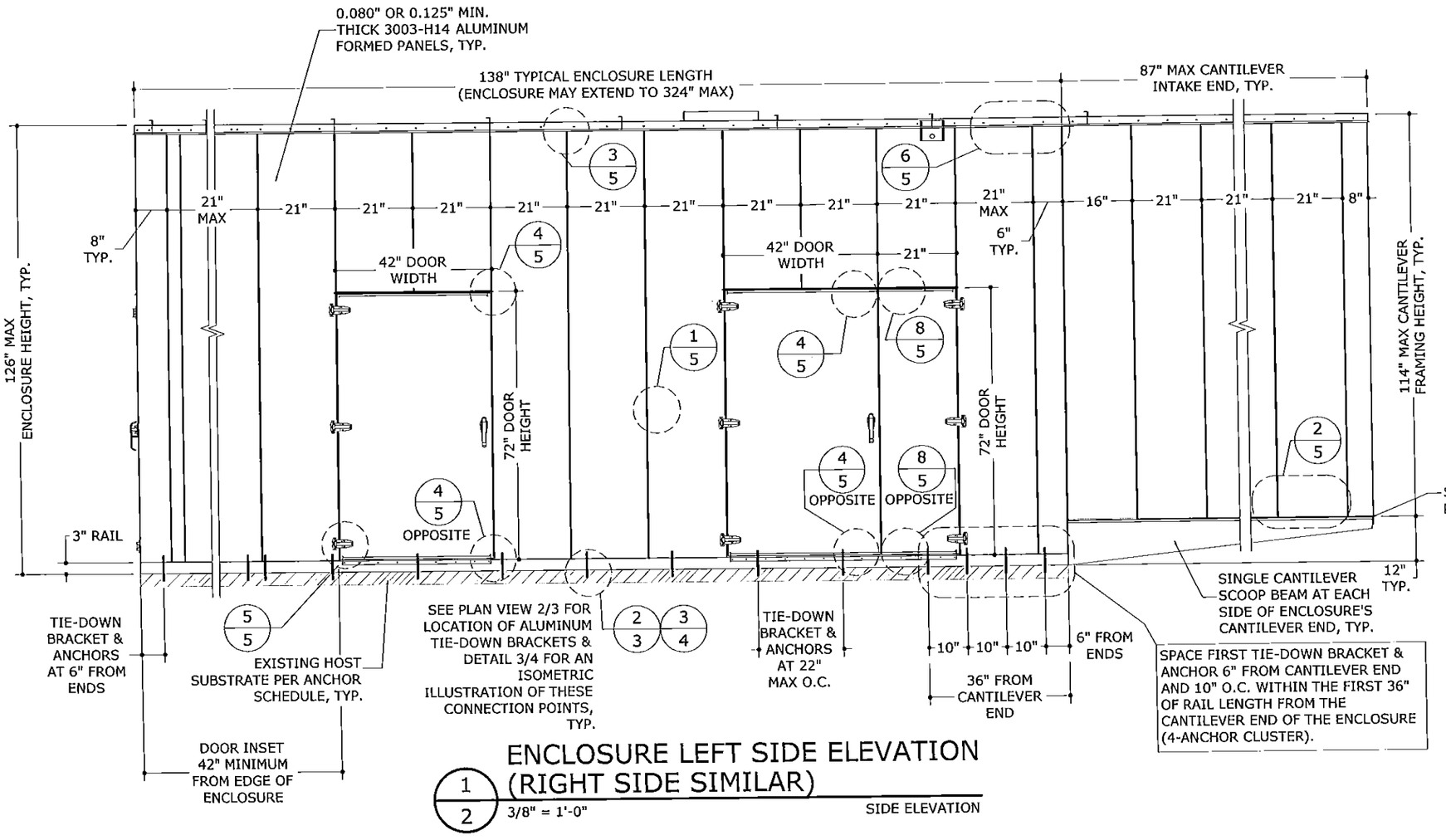

ENCLOSURE LEFT SIDE ELEVATION (RIGHT SIDE SIMILAR)

1/2 — 3/8" = 1'-0" — SIDE ELEVATION

Approved as complying with the Florida Building Code
Date 12/24/15
NOA# 14-1621.06
Miami Dade Product Control
By

FRANK L. BENNARDO, P.E.
PE0046549
11/11/2015

ENGINEERING EXPRESS®
160 SW 12th AVENUE, #106
DEERFIELD BEACH, FL 33442
PH: (954) 354-0660 FAX: (954) 354-0443
WWW.ENGEXP.COM
CERT OF AUTH: #8885
A FRANK L. BENNARDO, P.E., INC. INNOVATION

BHP INC. / D.B.A. GLOBAL POWER COMPONENTS
6682 W. GREENFIELD AVE., STE. 102
WEST ALLIS, WI 53214
PH:(414) 475-3000

GLOBAL POWER COMPONENTS
GENERATOR ENCLOSURE
MIAMI DADE NOTICE OF ACCEPTANCE

REMARKS	DRWN	CHKD	DATE
INIT ISSUE	CSL	TSB	10-06-14
REV PER COMMENTS	TSB	FLB	10/26/15

THIS DOCUMENT IS THE PROPERTY OF ENGINEERING EXPRESS AND SHALL NOT BE REPRODUCED IN WHOLE OR PART WITHOUT WRITTEN CONSENT OF THE CERTIFYING ENGINEER. ALTERATIONS, ADDITIONS, HIGHLIGHTING, OR OTHER MARKINGS TO THIS DOCUMENT ARE NOT PERMITTED AND INVALIDATE SEAL CERTIFICATION.

COPYRIGHT ENGINEERING EXPRESS

14-1692

SCALE: -

PAGE DESCRIPTION:
-
-

2 OF 13

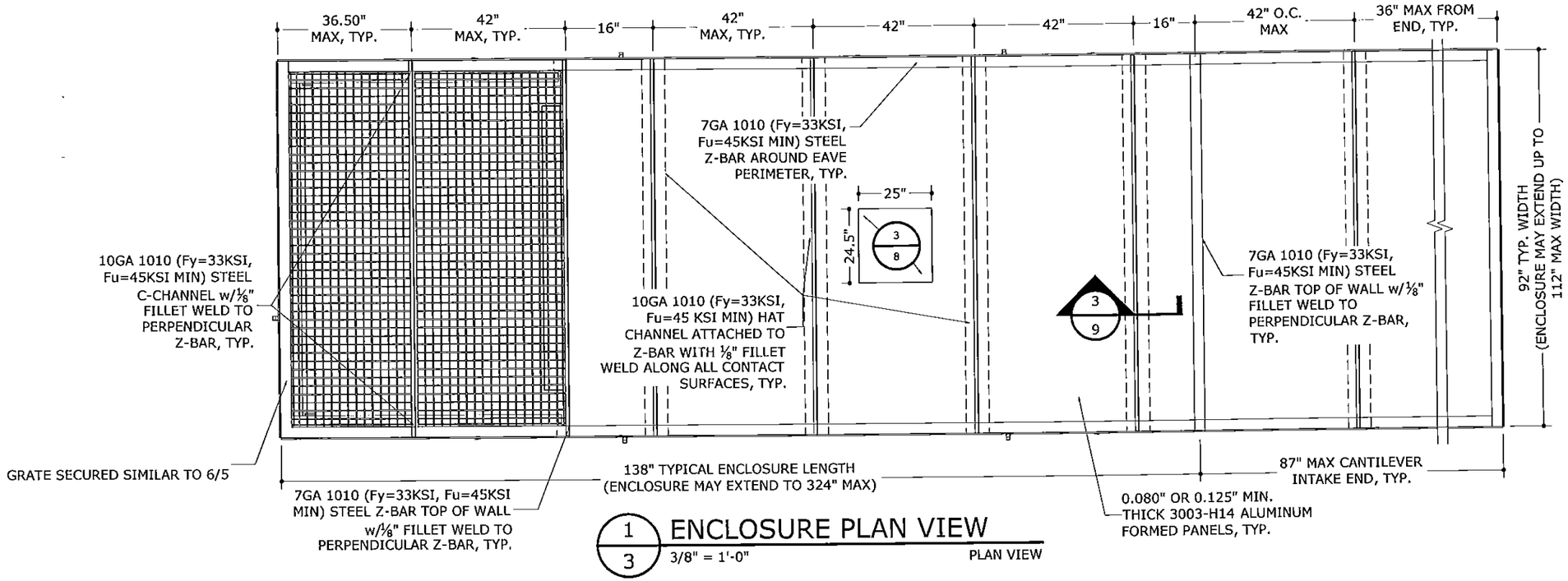

1/3 ENCLOSURE PLAN VIEW

3/8" = 1'-0" PLAN VIEW

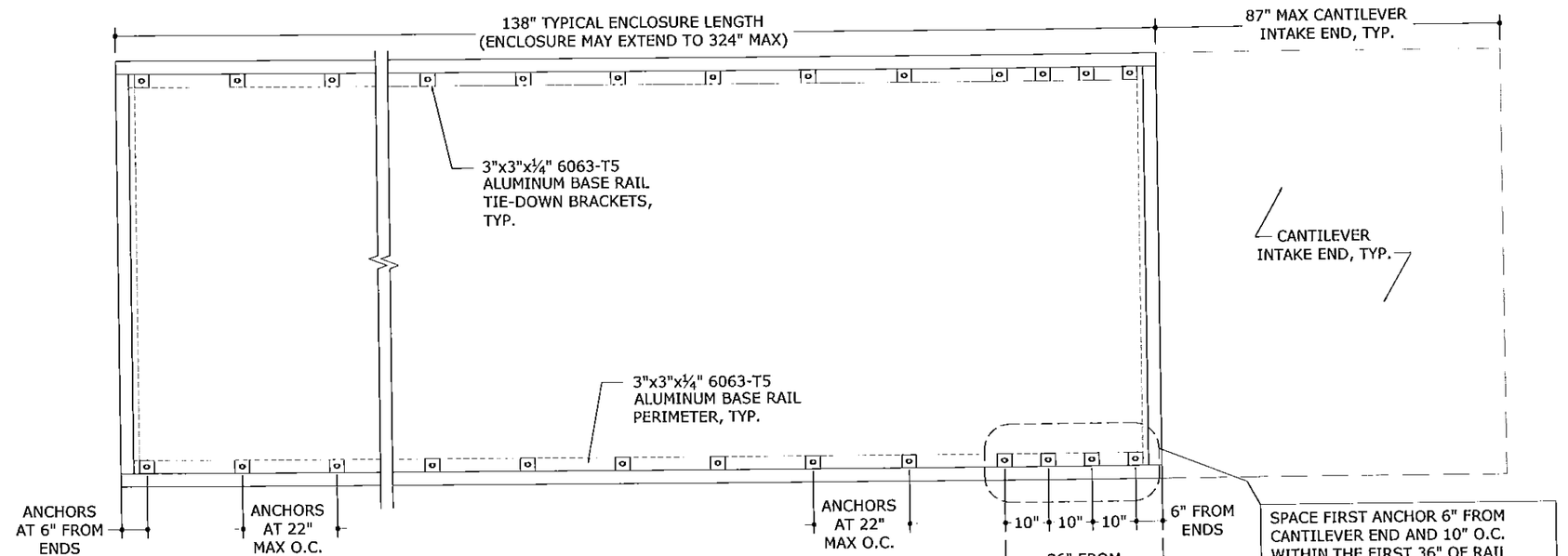

2/3 ENCLOSURE BASE RAIL TIE-DOWN FRAMING

3/8" = 1'-0" PLAN VIEW

Approved as complying with the Florida Building Code
Date 12/24/15
NOA# 14-1021.06
Miami Dade Product Control
By

FRANK L. BENNARDO, P.E.
PE0046549

11/11/2015

ENGINEERING EXPRESS®
160 SW 12th AVENUE, #106
DEERFIELD BEACH, FL 33442
Ph: (954) 354-0660 Fax: (954) 354-0443
WWW.ENGEXP.COM
CERT OF AUTH #8865
A FRANK L. BENNARDO, P.E., INC. INNOVATION

BHP INC. / D.B.A. GLOBAL POWER COMPONENTS
6682 W. GREENFIELD AVE., STE. 102
WEST ALLIS, WI 53214
PH:(414) 475-3000

GLOBAL POWER COMPONENTS
GENERATOR ENCLOSURE
MIAMI DADE NOTICE OF ACCEPTANCE

REMARKS	DRWN	CHKD	DATE
INIT ISSUE	CSL	TSB	10-06-14
REV PER COMMENTS	TSB	FLB	10/26/15

THIS DOCUMENT IS THE PROPERTY OF ENGINEERING EXPRESS AND SHALL NOT BE REPRODUCED, USED, OR PART WITHOUT WRITTEN CONSENT OF THE CERTIFYING ENGINEER. ALTERATIONS, ADDITIONS, HIGHLIGHTING, OR OTHER MARKINGS TO THIS DOCUMENT ARE NOT PERMITTED AND INVALIDATE OUR CERTIFICATION.
COPYRIGHT ENGINEERING EXPRESS

14-1692

SCALE: -

PAGE DESCRIPTION:
-
-

3 OF 13

V:\Projects\14-1692 Generator Enclosure Family - Miami-Dade NOA-Initial Submittal\WP\14-1692_I Generator Enclosure NOA.dwg
11/11/2015 - 12:55pm troyb

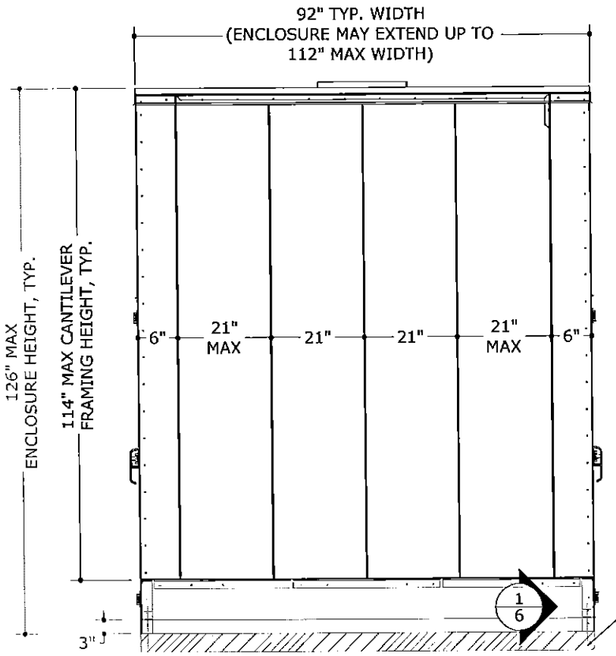

1/4 CANTILEVER END ELEVATION
3/8" = 1'-0" ELEVATION

TIE-DOWN ANCHOR SCHEDULE: (SEE NOTE BELOW)

ANCHOR TYPE	DESCRIPTION	DIRECTIVE
TYPE #1 USED FOR ENCLOSURE MOUNTED TO *STEEL SUBSTRATE (BY OTHERS)	5/8"Ø-11 SAE GRADE 5 OR ASTM A325 CARBON STEEL BOLT WITH 2"Ø WASHERS AND SAE GRADE HEX NUT	FASTEN 1/4" THICK 6063-T5 ALUMINUM ENCLOSURE TO STEEL HOST (BY OTHERS) MIN 7GA ASTM 1010 STEEL WITH BOLTS AT 6" FROM ENDS AND SPACED AS SHOWN ON TIE-DOWN PLAN 2/3.
TYPE #2 USED FOR ENCLOSURE MOUNTED DIRECTLY TO CONRETE	5/8"Ø CARBON STEEL OR GALVANIZED HILTI KWIK BOLT 3 WITH 2"Ø WASHER, 3" EMBEDMENT TO 3KSI MIN. CONCRETE, 8½" EDGE DISTANCE	FASTEN 1/4" THICK 6063-T5 ALUMINUM ENCLOSURE TO 3KSI CONCRETE WITH KWIK BOLTS AT 6" FROM ENDS AND SPACED AS SHOWN ON TIE-DOWN PLAN 2/3. DO NOT SPACE ANCHOR CLOSER THAN 10" CENTER TO CENTER FROM ANY ADJACENT CONCRETE ANCHOR

* IF MOUNTED TO A STEEL CURB OR STEEL TANK, THE SUPPORTING STEEL STRUCTURE SHALL NOT EXCEED 54" IN HEIGHT IN ORDER TO COMPLY WITH THE DESIGN CRITERIA SET FORTH FOR AN AT GRADE STRUCTURE WITH 15'-0' MAX MEAN ROOF HEIGHT.

NOTE: THIS TIE-DOWN ANCHOR SCHEDULE IS FOR THE PURPOSE OF TESTING ONLY. THE ATTACHMENT OF EACH UNIT TO ANY SUBSTRATE SHALL BE ENGINEERED AND REVIEWED BY THE CORRESPONDING BUILDING DEPARTMENT FOR EACH JOB.

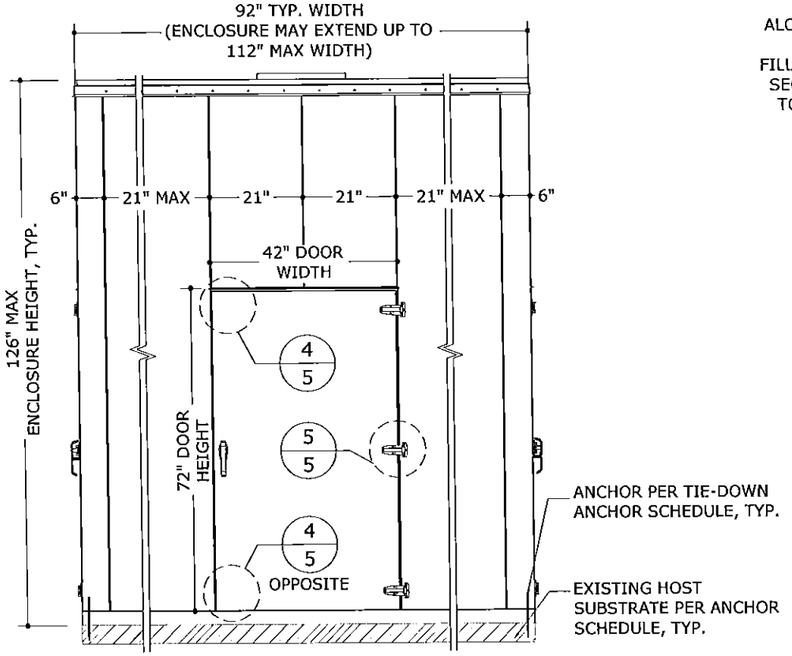

2/4 NON-CANTILEVER END ELEVATION
3/8" = 1'-0" ELEVATION

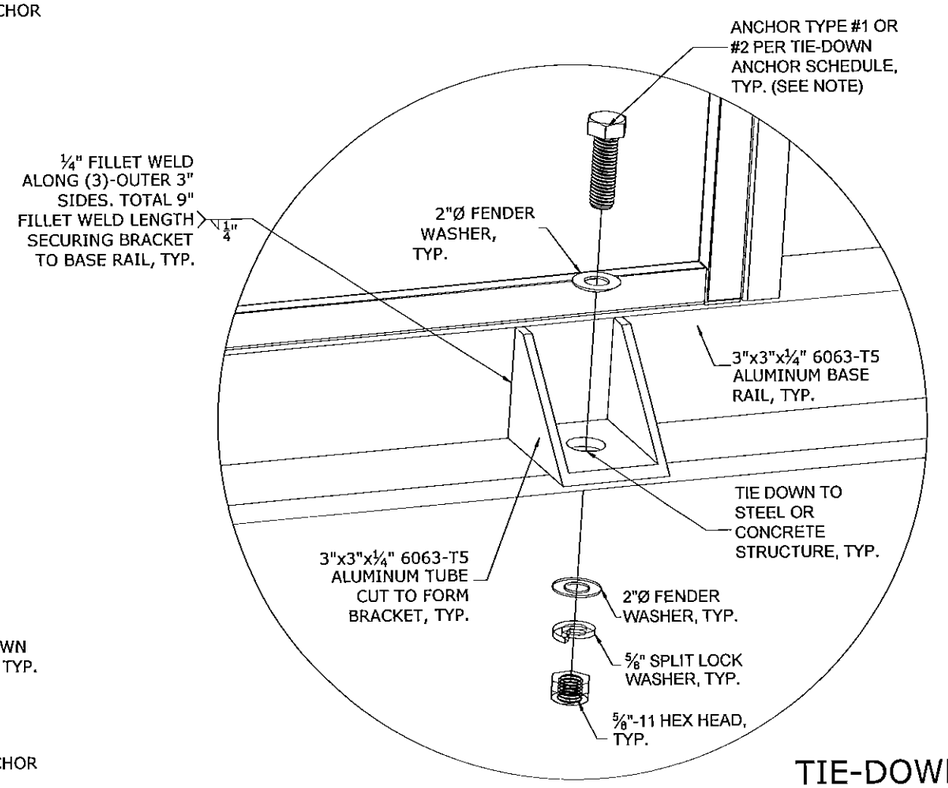

3/4 TIE-DOWN BRACKET AND ANCHOR
N.T.S. ISOMETRIC

Approved as complying with the
Florida Building Code
Date 12/24/15
NOA# 14-1021.06
Miami Dade Product Control
By

FRANK L. BENNARDO, P.E.
PE0046549
11/11/2015

ENGINEERING EXPRESS®
160 SW 12th AVENUE, #106
DEERFIELD BEACH, FL 33442
PH: (954) 354-0660 FAX: (954) 354-0443
WWW.ENGEXP.COM
CERT OF AUTH #8885
A FRANK L. BENNARDO, P.E., INC. INNOVATION

BHP INC. / D.B.A. GLOBAL POWER COMPONENTS
6682 W. GREENFIELD AVE., STE. 102
WEST ALLIS, WI 53214
PH:(414) 475-3000

GLOBAL POWER COMPONENTS
GENERATOR ENCLOSURE
MIAMI DADE NOTICE OF ACCEPTANCE

REMARKS	DRWN	CHKD	DATE
INIT ISSUE	CSL	TSB	10-06-14
REV PER COMMENTS	TSB	FLB	10/26/15
		-	-
		-	-
		-	-

THIS DOCUMENT IS THE PROPERTY OF ENGINEERING EXPRESS AND SHALL NOT BE REPRODUCED, COPIED OR USED IN WHOLE OR PART WITHOUT THE WRITTEN CONSENT OF THE CERTIFYING ENGINEER. ALTERATIONS, ADDITIONS, HIGHLIGHTING, OR OTHER MARKINGS TO THIS DOCUMENT ARE NOT PERMITTED AND INVALIDATE OUR CERTIFICATION.
COPYRIGHT ENGINEERING EXPRESS

14-1692

SCALE: -

PAGE DESCRIPTION:
-
-

11/11/2015 - 12:55pm troyb V:\Projects\14-1692 Generator Enclosure Family - Miami-Dade NOA-Initial Submittal\WP\14-1692_I Generator Enclosure NOA.dwg

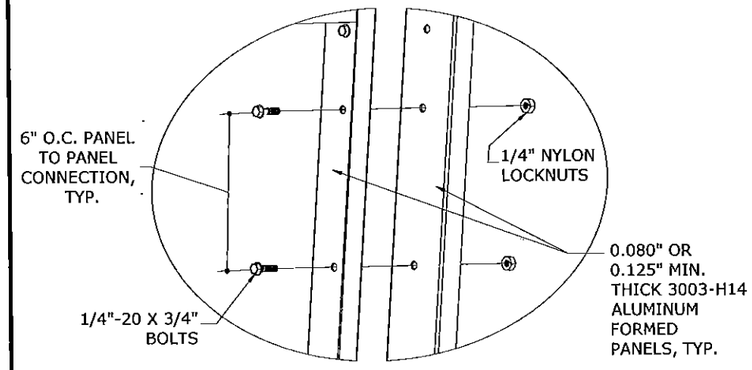

1/5 WALL PANEL TO WALL PANEL
N.T.S. ISOMETRIC

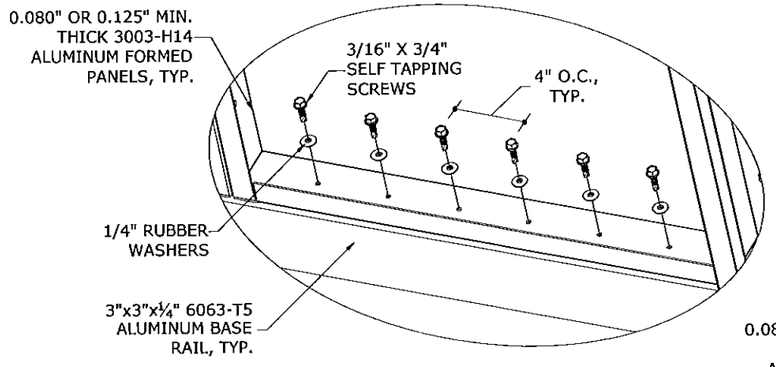

2/5 WALL PANEL TO BASE RAIL
N.T.S. ISOMETRIC

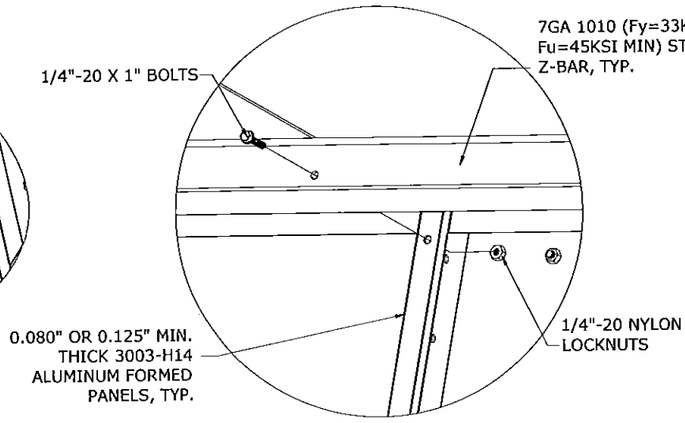

3/5 BRACKET TO PANEL
N.T.S. ISOMETRIC

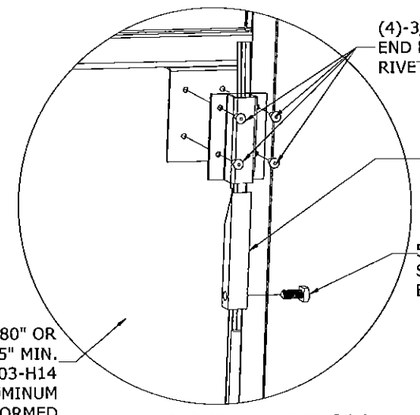

4/5 DOOR LATCH (TOP & BOTTOM)
N.T.S. INTERNAL VIEW ISOMETRIC

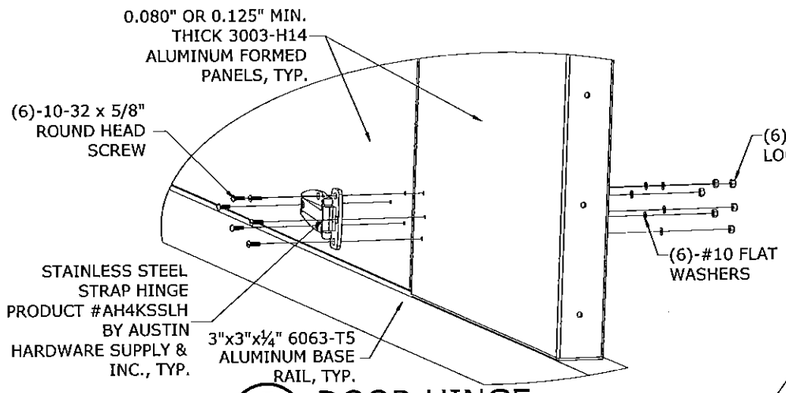

5/5 DOOR HINGE
N.T.S. ISOMETRIC

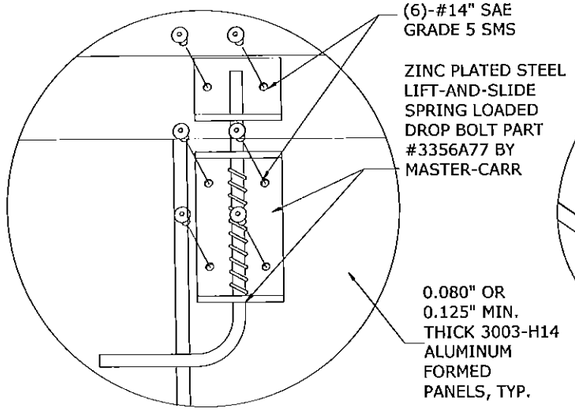

8/5 DOOR DROP BOLT (TOP & BOTTOM)
N.T.S. INTERNAL VIEW ISOMETRIC

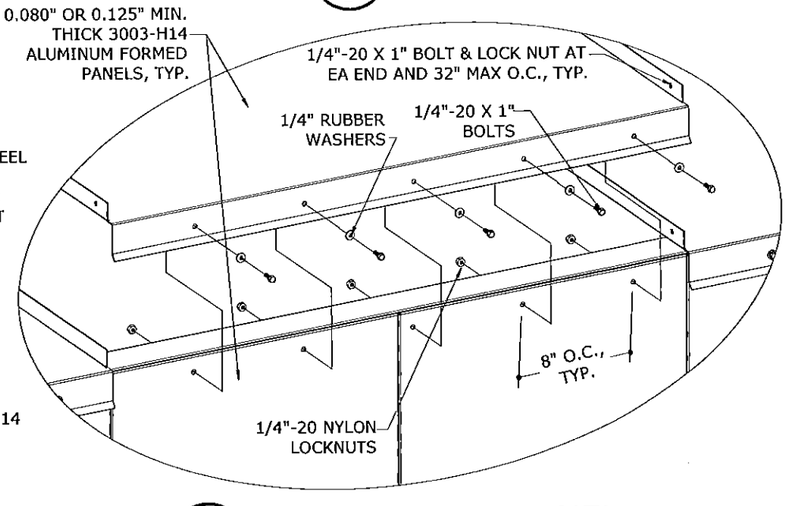

6/5 ROOF TO WALL PANEL
N.T.S. ISOMETRIC

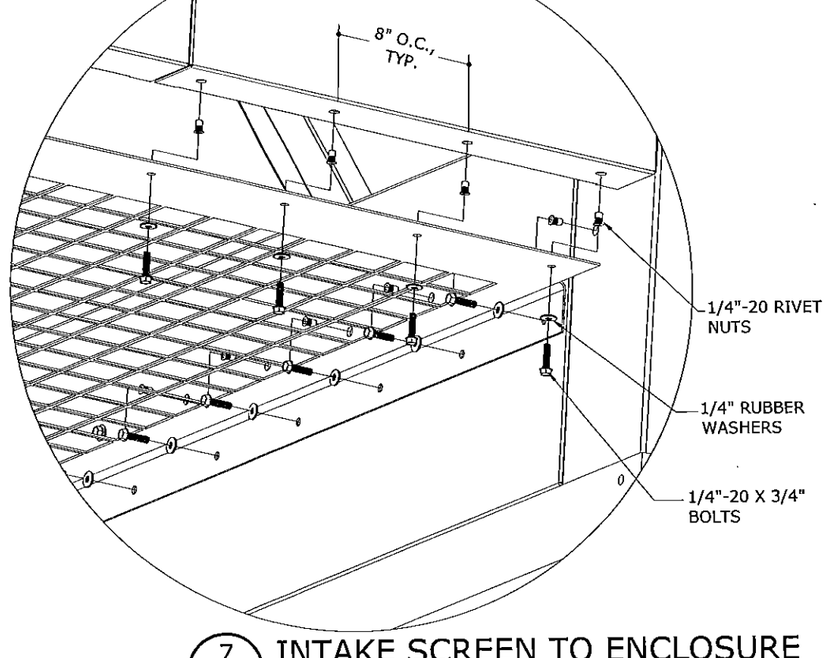

7/5 INTAKE SCREEN TO ENCLOSURE
N.T.S. ISOMETRIC

Approved as complying with the Florida Building Code
Date 12/24/15
NOA# 14-1021.06
Miami-Dade Product Control
By

FRANK L. BENNARDO, P.E.
PE0046549
11/11/2015

ENGINEERING EXPRESS®
160 SW 12th AVENUE, #106
DEERFIELD BEACH, FL 33442
PH: (954) 354-0660 FAX: (954) 354-0443
WWW.ENGEXP.COM
CERT OF AUTH #9885
A FRANK L. BENNARDO, P.E., INC. INNOVATION

BHP INC. / D.B.A. GLOBAL POWER COMPONENTS
6682 W. GREENFIELD AVE., STE. 102
WEST ALLIS, WI 53214
PH:(414) 475-3000

GLOBAL POWER COMPONENTS
GENERATOR ENCLOSURE
MIAMI DADE NOTICE OF ACCEPTANCE

REMARKS	DRWN	CHKD	DATE
INIT ISSUE	CSL	TSB	10-06-14
REV PER COMMENTS	TSB	FLB	10/26/15
-	-	-	-
-	-	-	-
-	-	-	-

THIS DOCUMENT IS THE PROPERTY OF ENGINEERING EXPRESS AND SHALL NOT BE REPRODUCED IN WHOLE OR PART WITHOUT WRITTEN CONSENT OF THE CERTIFYING ENGINEER. ALTERATIONS, ADDITIONS, NONE OTHER MARKINGS TO THIS DOCUMENT ARE NOT PERMITTED AND INVALIDATE OUR CERTIFICATION.
COPYRIGHT ENGINEERING EXPRESS

14-1692
SCALE: -
PAGE DESCRIPTION:
-
-

5 OF 13

V:\Projects\14-1692 Generator Enclosure Family - Miami-Dade NOA-Initial Submittal\WP\14-1692_I Generator Enclosure NOA.dwg
troyb
11/11/2015 - 12:55pm

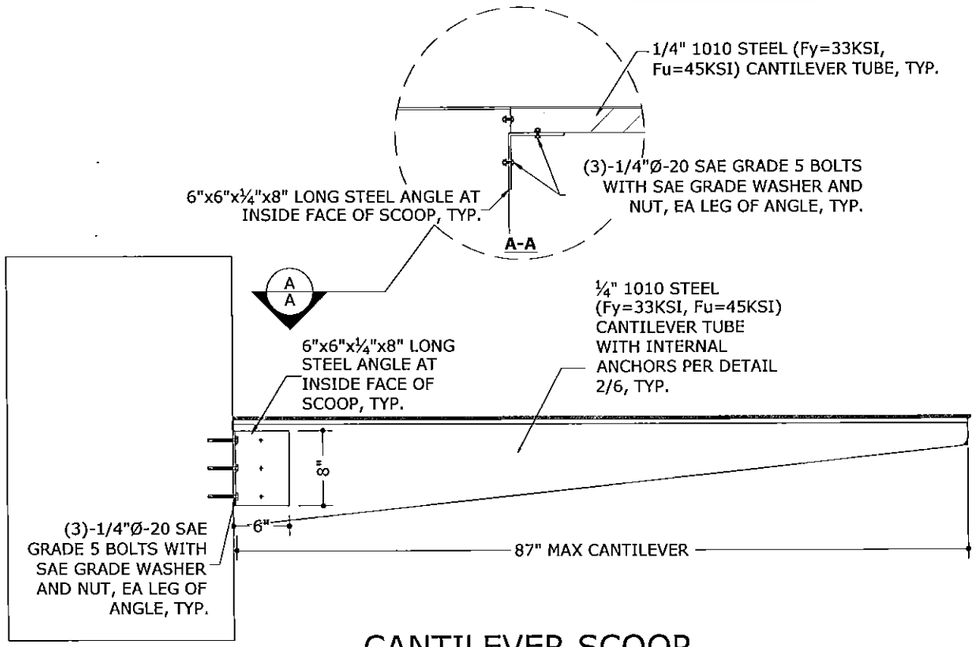

1/6 CANTILEVER SCOOP PARTIAL ELEVATION

N.T.S. PARTIAL ELEVATION

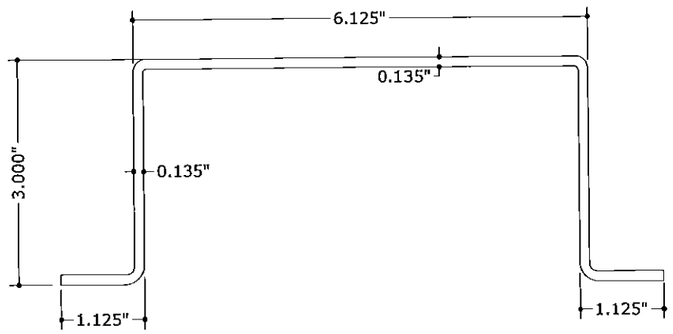

ROOF HAT CHANNEL
10 GA (Fy=33KSI, Fu=45KSI)

2/6 CANTILEVER TUBES

N.T.S. ISOMETRIC

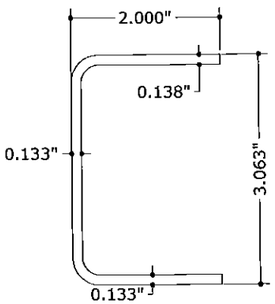

ROOF C-CHANNEL
10 GA (Fy=33KSI, Fu=45KSI)

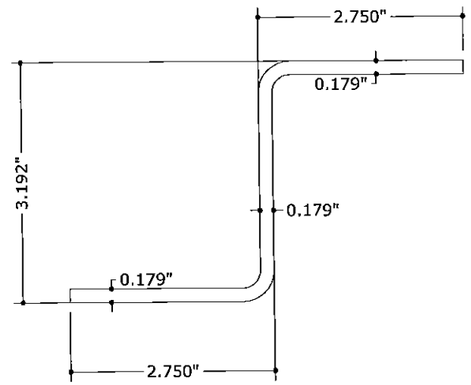

SIDE Z-BRACKET
7 GA (Fy=33KSI, Fu=45KSI)

3/6 STEEL FRAMING MEMBERS

N.T.S. DETAILS

Approved as complying with the Florida Building Code
Date 12/24/15
NOA# 14-1021.06
Miami-Dade Product Control
By

FRANK L. BENNARDO, P.E.
PE0046549
11/11/2015

ENGINEERING EXPRESS®
160 SW 12th AVENUE, #106
DEERFIELD BEACH, FL 33442
PH: (954) 354-0660 FAX: (954) 354-0443
WWW.ENGEXP.COM
CERT OF AUTH #8885
A. FRANK L. BENNARDO, P.E., INC. INNOVATION

BHP INC. / D.B.A. GLOBAL POWER COMPONENTS
6682 W. GREENFIELD AVE., STE. 102
WEST ALLIS, WI 53214
PH:(414) 475-3000

GLOBAL POWER COMPONENTS
GENERATOR ENCLOSURE
MIAMI DADE NOTICE OF ACCEPTANCE

REMARKS	DRWN	CHK'D	DATE
INIT ISSUE	CSL	TSB	10-06-14
REV PER COMMENTS	TSB	FLB	10/26/15
-	-	-	-
-	-	-	-
-	-	-	-

THIS DOCUMENT IS THE PROPERTY OF ENGINEERING EXPRESS AND SHALL NOT BE REPRODUCED IN WHOLE OR PART WITHOUT WRITTEN CONSENT OF THE CERTIFYING ENGINEERS. ALTERATIONS, ADDITIONS, HIGHLIGHTING, OR OTHER MARKINGS TO THIS DOCUMENT ARE NOT PERMITTED AND INVALIDATE SUCH CERTIFICATION.

COPYRIGHT ENGINEERING EXPRESS

14-1692

SCALE: -

PAGE DESCRIPTION:
-
-

6 OF 13

11/11/2015 - 12:56pm troyb V:\Projects\14-1692 Generator Enclosure Family - Miami-Dade NOA-Initial Submittal\WP\14-1692_I Generator Enclosure NOA.dwg

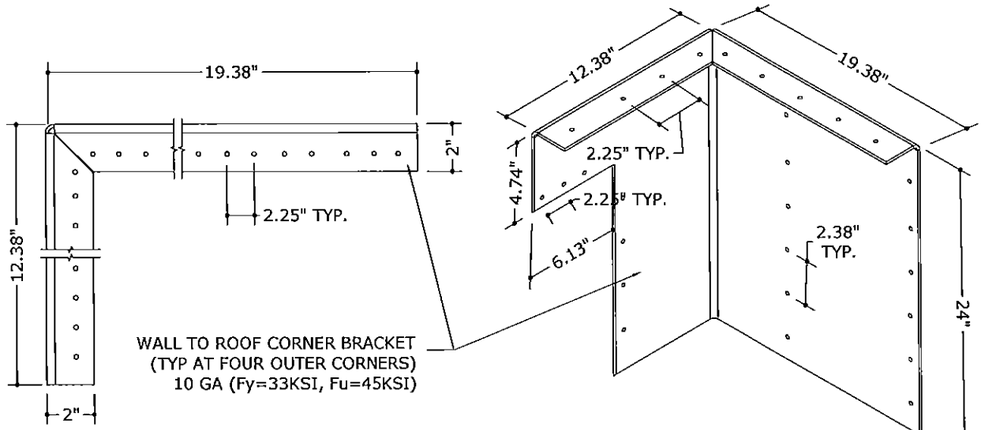

1/7 WALL TO ROOF BRACKET
N.T.S. DETAILS

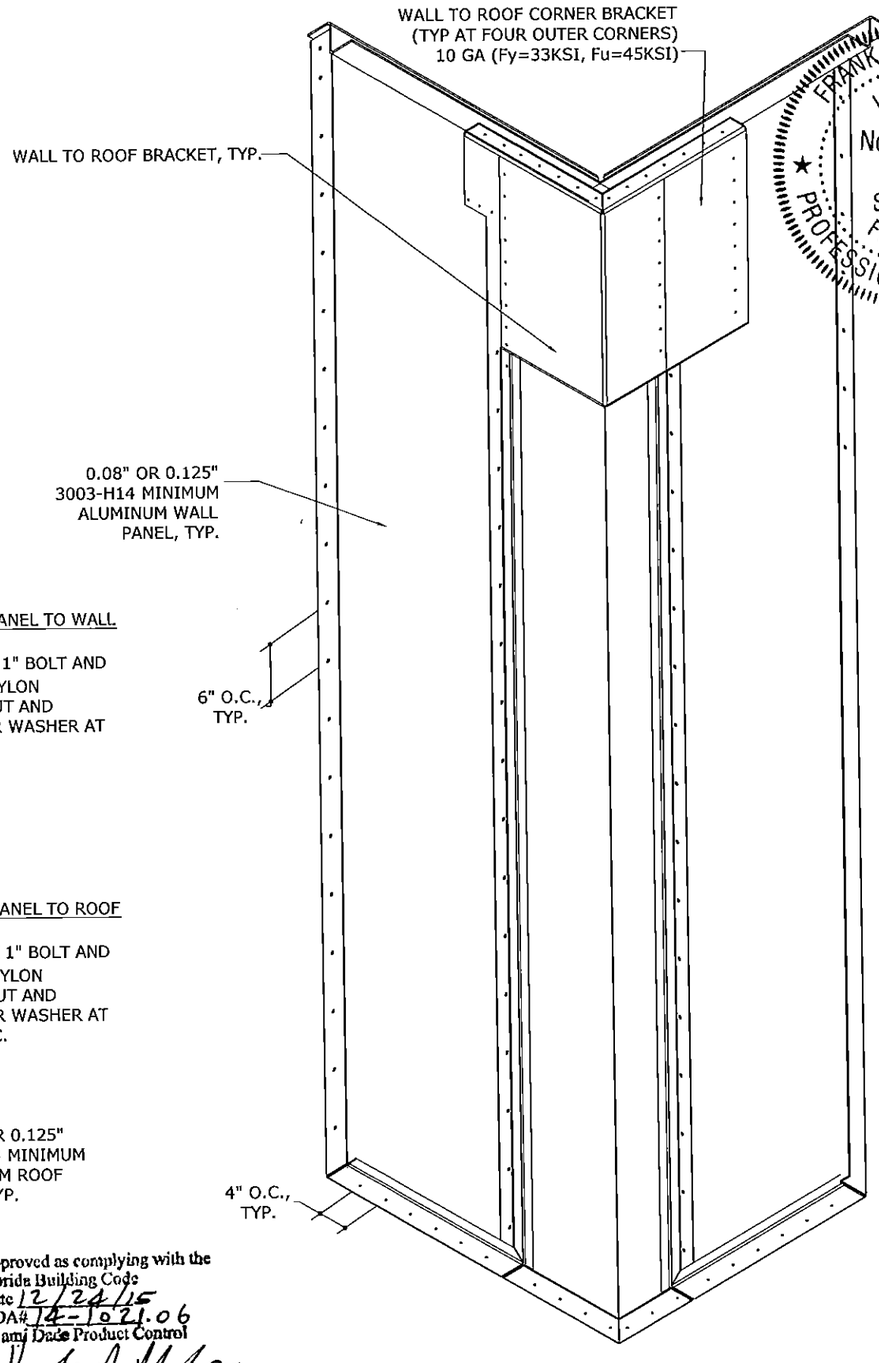

2/7 WALL TO ROOF BRACKET FRAMING
N.T.S. ISOMETRIC

3/7 TYPICAL WALL PANELS
N.T.S. DETAIL

4/7 TYPICAL ROOF PANELS
N.T.S. DETAIL

Approved as complying with the
Florida Building Code
Date 12/24/15
NOA# 14-1021.06
Miami Dade Product Control
By

FRANK L. BENNARDO, P.E.
PE0046549
11/11/2015
LICENSE No. 46549 STATE OF FLORIDA PROFESSIONAL ENGINEER

ENGINEERING EXPRESS®
160 SW 12th AVENUE, #166
DEERFIELD BEACH, FL 33442
PH: (954) 354-0660 FAX: (954) 354-0443
WWW.ENGEXP.COM
CERT OF AUTH #8885
A FRANK L. BENNARDO, P.E., INC. INNOVATION

BHP INC. / D.B.A. GLOBAL POWER COMPONENTS
6682 W. GREENFIELD AVE., STE. 102
WEST ALLIS, WI 53214
PH:(414) 475-3000

GLOBAL POWER COMPONENTS
GENERATOR ENCLOSURE
MIAMI DADE NOTICE OF ACCEPTANCE

REMARKS	DRWN	CHKD	DATE
INIT ISSUE	CSL	TSB	10-06-14
REV PER COMMENTS	TSB	FLB	10/26/15

THIS DOCUMENT IS THE PROPERTY OF ENGINEERING EXPRESS AND SHALL NOT BE REPRODUCED IN WHOLE OR PART WITHOUT WRITTEN CONSENT OF THE CERTIFYING ENGINEER. ALTERATIONS, ADDITIONS, HIGHLIGHTING, OR OTHER MARKINGS TO THIS DOCUMENT ARE NOT PERMITTED AND INVALIDATE OUR CERTIFICATION.
COPYRIGHT ENGINEERING EXPRESS

14-1692

SCALE: -

PAGE DESCRIPTION:
-
-

7 OF 13

V:\Projects\14-1692 Generator Enclosure Family - Miami-Dade NOA-Initial Submittal\WP\14-1692_I Generator Enclosure NOA.dwg
troyb
11/11/2015 - 9:18am

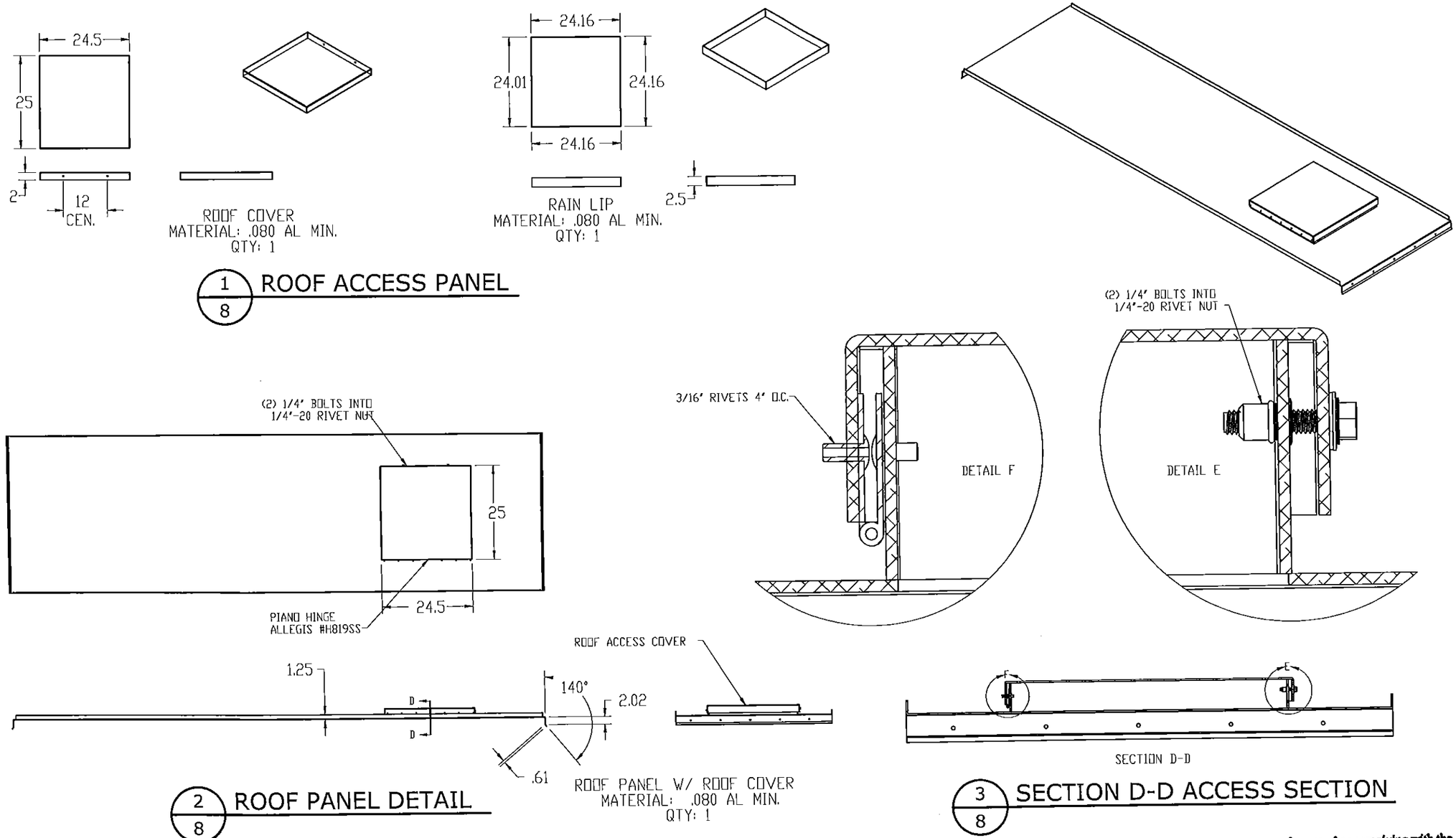

1/8 ROOF ACCESS PANEL

2/8 ROOF PANEL DETAIL

3/8 SECTION D-D ACCESS SECTION

Approved as complying with the
Florida Building Code
Date 12/24/15
NOA# 14-1021.06
Miami Dade Product Control
By [signature]

FRANK L. BENNARDO, P.E.
PE0046549

11/11/2015

ENGINEERING EXPRESS®
160 SW 12th AVENUE, #106
DEERFIELD BEACH, FL 33442
PH: (954) 354-0660 FAX: (954) 354-0443
WWW.ENGEXP.COM
CERT OF AUTH #9885
A FRANK L. BENNARDO, P.E., INC. INNOVATION

BHP INC. / D.B.A. GLOBAL POWER COMPONENTS
6682 W. GREENFIELD AVE., STE. 102
WEST ALLIS, WI 53214
PH:(414) 475-3000

GLOBAL POWER COMPONENTS
GENERATOR ENCLOSURE
MIAMI DADE NOTICE OF ACCEPTANCE

REMARKS	DRWN	CHKD	DATE
INIT ISSUE	CSL	TSB	10-06-14
REV PER COMMENTS	TSB	FLB	10/26/15
-	-	-	-
-	-	-	-
-	-	-	-

THIS DOCUMENT IS THE PROPERTY OF ENGINEERING EXPRESS AND SHALL NOT BE REPRODUCED IN WHOLE OR PART WITHOUT WRITTEN CONSENT OF THE CERTIFYING ENGINEER. ALTERATIONS, ADDITIONS, HIGHLIGHTING, OR OTHER MARKINGS TO THIS DOCUMENT ARE NOT PERMITTED AND INVALIDATE OUR CERTIFICATION.

COPYRIGHT ENGINEERING EXPRESS

14-1692

SCALE: -

PAGE DESCRIPTION:
-
-

V:\Projects\14-1692 Generator Enclosure Family - Miami-Dade NOA-Initial Submittal\WP\14-1692_I Generator Enclosure NOA.dwg
11/11/2015 - 12:56pm troyb

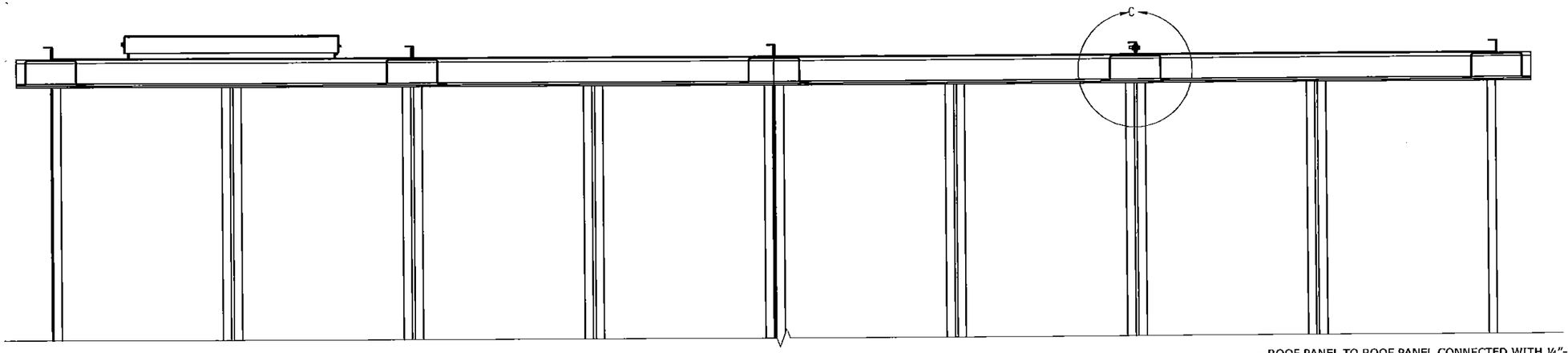

1/9 SECTION B-B WALL PANEL / ROOF SECTION

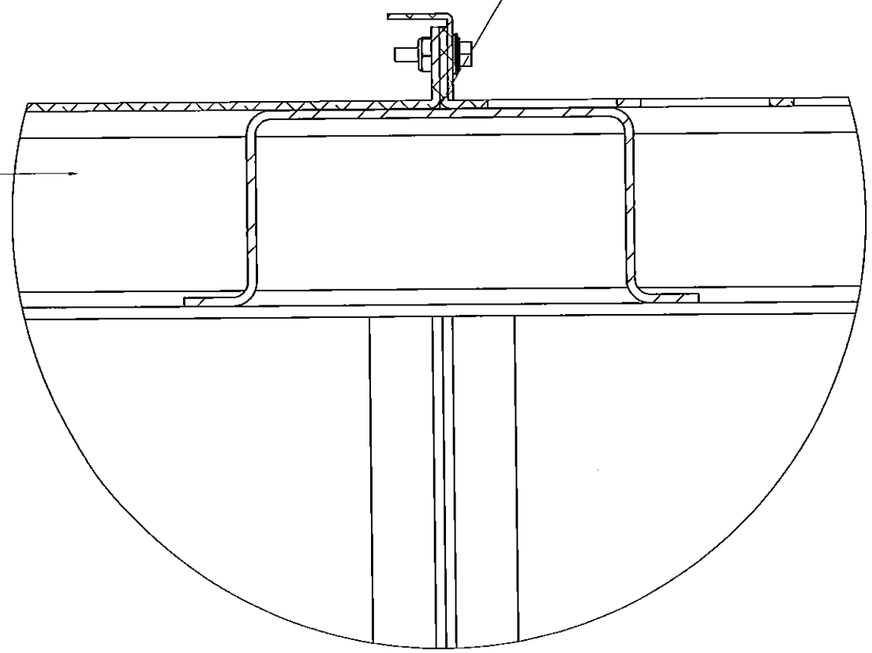

2/9 ROOF CUTAWAY DETAIL

3/9 DETAIL C - ROOF SUPPORT

Approved as complying with the Florida Building Code
Date 12/24/15
NOA# 14-1021.06
Miami-Dade Product Control
By

FRANK L. BENNARDO, P.E.
PE0046549

11/11/2015

ENGINEERING EXPRESS®
160 SW 12th AVENUE, #106
DEERFIELD BEACH, FL 33442
Ph: (954) 354-0660 Fax: (954) 354-0443
WWW.ENGEXP.COM
CERT OF AUTH #9985
A FRANK L. BENNARDO, P.E., INC. INNOVATION

BHP INC. / D.B.A. GLOBAL POWER COMPONENTS
6682 W. GREENFIELD AVE., STE. 102
WEST ALLIS, WI 53214
PH:(414) 475-3000

GLOBAL POWER COMPONENTS
GENERATOR ENCLOSURE
MIAMI DADE NOTICE OF ACCEPTANCE

REMARKS	DRWN	CHKD	DATE
INIT ISSUE	CSL	TSB	10-06-14
REV PER COMMENTS	TSB	FLB	10/26/15
-	-	-	-
-	-	-	-
-	-	-	-

THIS DOCUMENT IS THE PROPERTY OF ENGINEERING EXPRESS AND SHALL NOT BE REPRODUCED IN ANY MANNER WITHOUT THE WRITTEN CONSENT OF THE CERTIFYING BUSINESS. ALTERATIONS, ADDITIONS, HIGHLIGHTING, OR OTHER MARKINGS TO THIS DOCUMENT ARE NOT PERMITTED AND INVALIDATE OUR CERTIFICATION.

COPYRIGHT ENGINEERING EXPRESS

14-1692

SCALE: -

PAGE DESCRIPTION:
-
-

9 OF 13

11/11/2015 - 12:56pm troyb V:\Projects\14-1692 Generator Enclosure Family - Miami-Dade NOA-Initial Submittal\WP\14-1692_I Generator Enclosure NOA.dwg

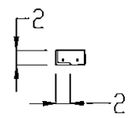

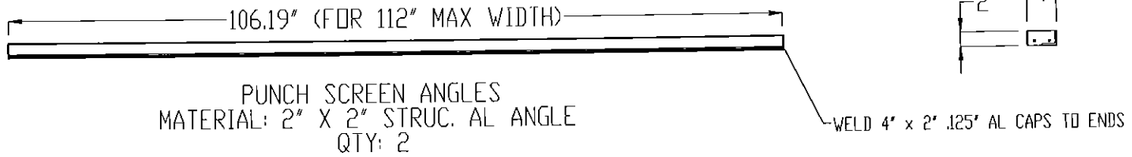

PUNCH SCREEN ANGLES
MATERIAL: 2" X 2" STRUC. AL ANGLE
QTY: 2

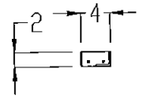

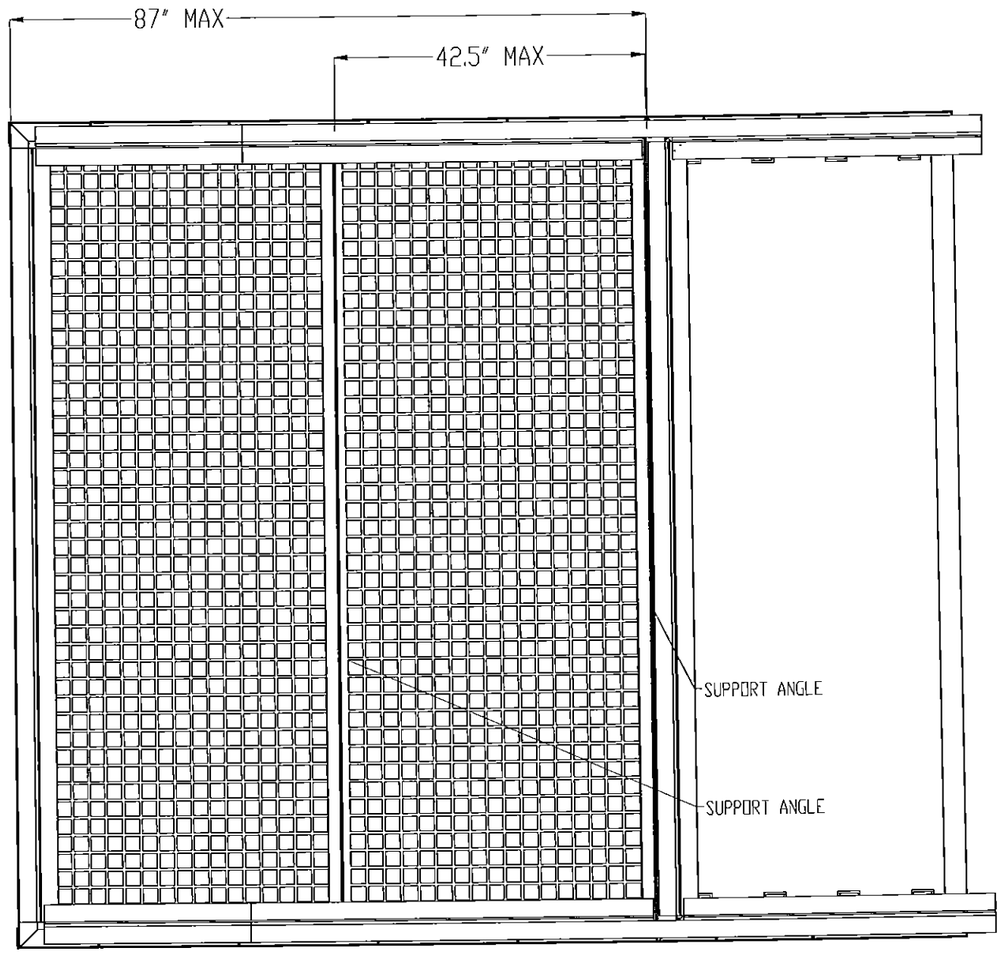

INTERIOR VIEW OF CANTILEVER INTAKE END (FROM ABOVE)

1/10 SCOOP INSTALLATION DETAIL

Approved as complying with the
Florida Building Code
Date 12/24/15
NOA# 14-1021.06
Miami Dade Product Control
By

FRANK L. BENNARDO, P.E.
PE0046549

11/11/2015

ENGINEERING EXPRESS®
160 SW 12th AVENUE, #106
DEERFIELD BEACH, FL 33442
PH: (954) 354-0660 FAX: (954) 354-0443
WWW.ENGEXP.COM
CERT OF AUTH #8985
A. FRANK L. BENNARDO, P.E., INC. INNOVATION

BHP INC. / D.B.A. GLOBAL POWER COMPONENTS
6682 W. GREENFIELD AVE., STE. 102
WEST ALLIS, WI 53214
PH:(414) 475-3000

GLOBAL POWER COMPONENTS
GENERATOR ENCLOSURE
MIAMI DADE NOTICE OF ACCEPTANCE

REMARKS	DRWN	CHKD	DATE
INIT ISSUE	CSL	TSB	10-06-14
REV PER COMMENTS	TSB	FLB	10/26/15
-	-	-	-
-	-	-	-
-	-	-	-

THIS DOCUMENT IS THE PROPERTY OF ENGINEERING EXPRESS AND SHALL NOT BE REPRODUCED IN WHOLE OR IN PART WITHOUT THE WRITTEN CONSENT OF ENGINEERING EXPRESS. ANY UNAUTHORIZED ALTERATIONS, ADDITIONS, HIGHLIGHTING, OR OTHER MARKINGS TO THIS DRAWING OR ATTACHED DOCUMENT, ARE NOT PERMITTED AND INVALIDATE OUR CERTIFICATION.
COPYRIGHT ENGINEERING EXPRESS

14-1692

SCALE: -

PAGE DESCRIPTION:
-
-

OF 13

10

11/11/2015 - 1:06pm troyb V:\Projects\14-1692 Generator Enclosure Family - Miami-Dade NOA-Initial Submittal\WP\14-1692_I Generator Enclosure NOA.dwg

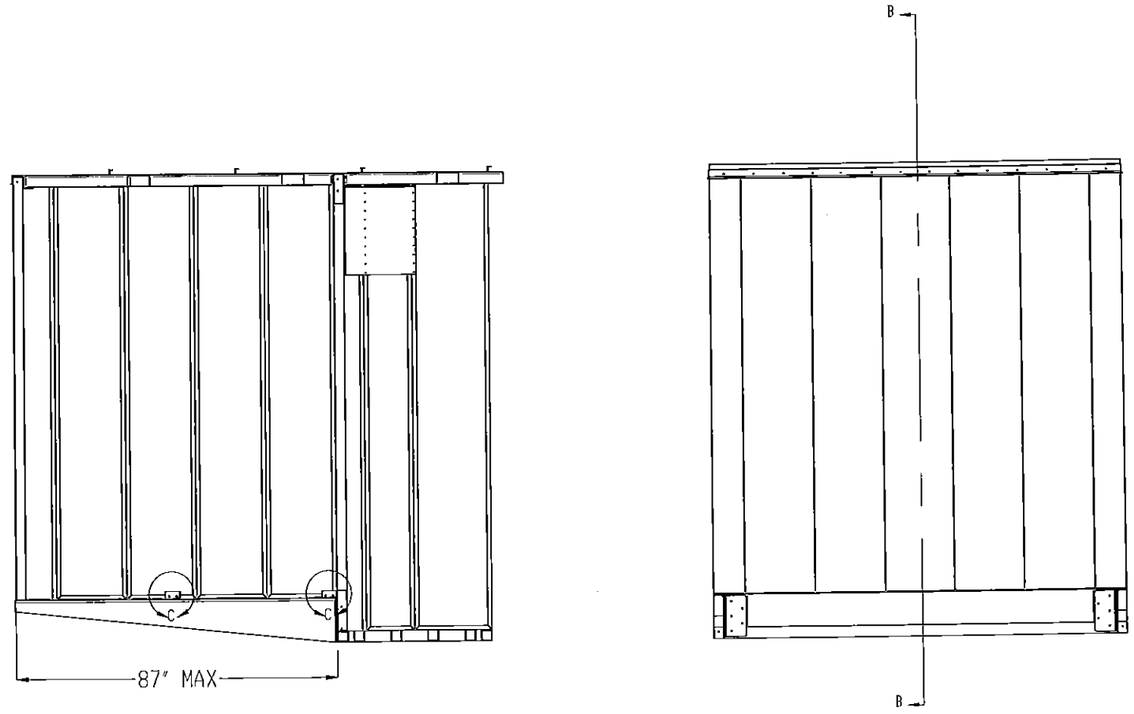

1/11 SCOOP ANGLE SUPPORT

Approved as complying with the Florida Building Code
Date 12/24/15
NOA# 14-1021.06
Miami Dade Product Control
By [signature]

FRANK L. BENNARDO, P.E.
PE0046549

11/11/2015

ENGINEERING EXPRESS®
160 SW 12th AVENUE, #106
DEERFIELD BEACH, FL 33442
PH: (954) 354-0660 FAX: (954) 354-0443
WWW.ENGEXP.COM
CERT OF AUTH #9885
A FRANK L. BENNARDO, P.E., INC. INNOVATION

BHP INC. / D.B.A. GLOBAL POWER COMPONENTS
6682 W. GREENFIELD AVE., STE. 102
WEST ALLIS, WI 53214
PH:(414) 475-3000

GLOBAL POWER COMPONENTS
GENERATOR ENCLOSURE
MIAMI DADE NOTICE OF ACCEPTANCE

REMARKS	DRWN	CHKD	DATE
INIT ISSUE	CSL	TSB	10-06-14
REV PER COMMENTS	TSB	FLB	10/26/15
-	-	-	-
-	-	-	-
-	-	-	-

THIS DOCUMENT IS THE PROPERTY OF ENGINEERING EXPRESS AND SHALL NOT BE REPRODUCED IN WHOLE OR PART WITHOUT WRITTEN CONSENT OF THE CERTIFYING ENGINEER. ALTERATIONS, ADDITIONS, HIGHLIGHTING, OR OTHER MARKINGS TO THIS DOCUMENT ARE NOT PERMITTED AND INVALIDATE OUR CERTIFICATION.

COPYRIGHT ENGINEERING EXPRESS

14-1692

SCALE: -

PAGE DESCRIPTION:

11 OF 13

11/11/2015 - 1:06pm troyb V:\Projects\14-1692 Generator Enclosure Family - Miami-Dade NOA-Initial Submittal\WP\14-1692_I Generator Enclosure NOA.dwg

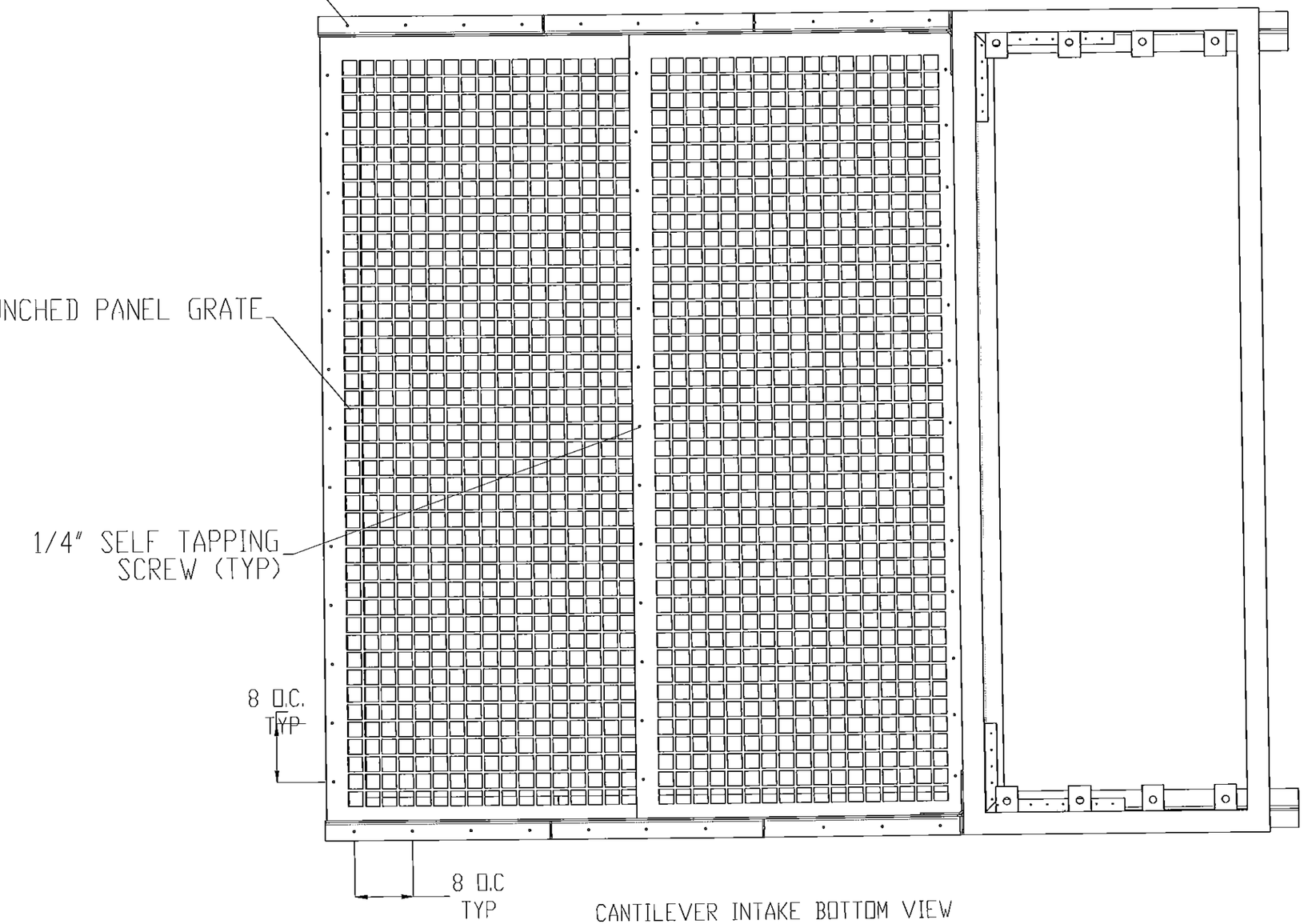

1/12 PUNCHED PANEL SCOOP

Approved as complying with the
Florida Building Code
Date 12/24/15
NOA# 14-1021.06
Miami Dade Product Control
By

FRANK L. BENNARDO, P.E.
PE0046549
11/11/2015

ENGINEERING EXPRESS®
160 SW 12th AVENUE, #106
DEERFIELD BEACH, FL 33442
PH: (954) 354-0660 FAX: (954) 354-0443
WWW.ENGEXP.COM
CERT OF AUTH #9885
A. FRANK L. BENNARDO, P.E., INC. INNOVATION

BHP INC. / D.B.A. GLOBAL POWER COMPONENTS
6682 W. GREENFIELD AVE., STE. 102
WEST ALLIS, WI 53214
PH:(414) 475-3000

GLOBAL POWER COMPONENTS
GENERATOR ENCLOSURE
MIAMI DADE NOTICE OF ACCEPTANCE

REMARKS	DRWN	CHKD	DATE
INIT ISSUE	CSL	TSB	10-06-14
REV PER COMMENTS	TSB	FLB	10/26/15
-	-	-	-
-	-	-	-
-	-	-	-

THIS DOCUMENT IS THE PROPERTY OF ENGINEERING EXPRESS AND SHALL NOT BE REPRODUCED IN WHOLE OR IN PART WITHOUT THE WRITTEN CONSENT OF THE CERTIFYING ENGINEER. ALTERATIONS, ADDITIONS, HIGHLIGHTING, OR OTHER MARKINGS TO THIS DOCUMENT ARE NOT PERMITTED AND INVALIDATE OUR CERTIFICATION.

COPYRIGHT ENGINEERING EXPRESS

14-1692

SCALE: -

PAGE DESCRIPTION:
-
-

12 OF 13

11/11/2015 - 1:06pm troyb V:\Projects\14-1692 Generator Enclosure Family - Miami-Dade NOA-Initial Submittal\WP\14-1692_I Generator Enclosure NOA.dwg

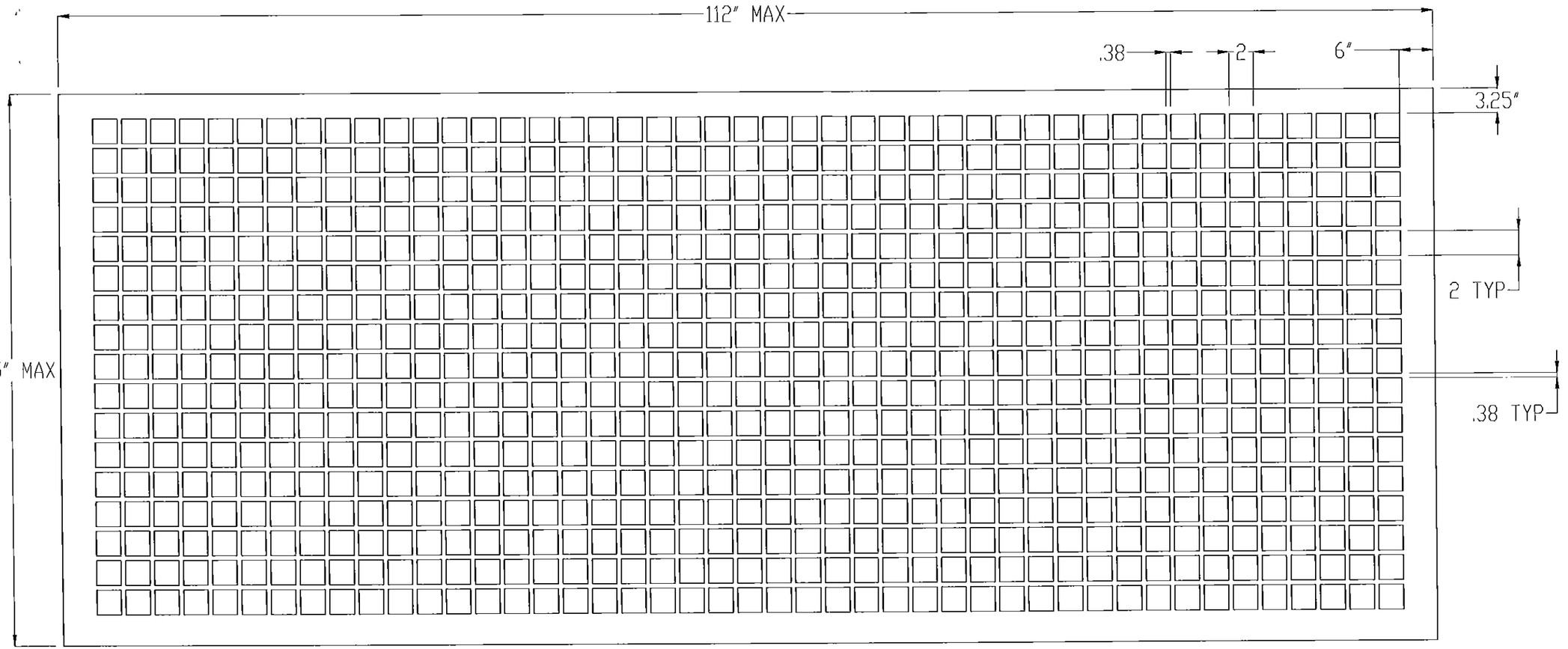

SCOOP PUNCH SCREEN
MATERIAL: 0.080" AL MIN.
QTY: 2

1/13 PUNCHED PANEL

Approved as complying with the
Florida Building Code
Date 12/24/15
NOA# 14-1021.06
Miami-Dade Product Control
By

FRANK L. BENNARDO, P.E.
PE0046549
11/11/2015

ENGINEERING EXPRESS®
160 SW 12th AVENUE, #106
DEERFIELD BEACH, FL 33442
PH: (954) 354-0660 FAX: (954) 354-0443
WWW.ENGEXP.COM
CERT OF AUTH #9885
A FRANK L. BENNARDO, P.E., INC. INNOVATION

BHP INC. / D.B.A. GLOBAL POWER COMPONENTS
6682 W. GREENFIELD AVE., STE. 102
WEST ALLIS, WI 53214
PH:(414) 475-3000

GLOBAL POWER COMPONENTS
GENERATOR ENCLOSURE
MIAMI DADE NOTICE OF ACCEPTANCE

REMARKS	DRWN	CHK'D	DATE
INIT ISSUE	CSL	TSB	10-06-14
REV PER COMMENTS	TSB	FLB	10/26/15
-	-	-	-
-	-	-	-
-	-	-	-

THIS DOCUMENT IS THE PROPERTY OF ENGINEERING EXPRESS AND SHALL NOT BE REPRODUCED IN WHOLE OR PART WITHOUT WRITTEN CONSENT OF THE CERTIFYING ENGINEER. ALTERATIONS, ADDITIONS, HIGHLIGHTING, OR OTHER MARKINGS TO THIS DOCUMENT ARE NOT PERMITTED AND INVALIDATE EOR CERTIFICATION.
COPYRIGHT ENGINEERING EXPRESS

14-1692
SCALE: -
PAGE DESCRIPTION:
-
-

11/11/2015 - 1:06pm troyb V:\Projects\14-1692 Generator Enclosure Family - Miami-Dade NOA-Initial Submittal\WP\14-1692_I Generator Enclosure NOA.dwg