MIAMI-DADE COUNTY
DEPARTMENT OF REGULATORY AND ECONOMIC RESOURCES (RER)
BOARD AND CODE ADMINISTRATION DIVISION

MIAMI-DADE COUNTY
PRODUCT CONTROL SECTION
11805 SW 26 Street, Room 208
T (786) 315-2590 F (786) 315-2599
www.miamidade.gov/economy

# NOTICE OF ACCEPTANCE (NOA)

**La Finestra, L.C.**
**2790 N.W. 104 Court**
**Miami, FL 33172**

**SCOPE:**

This NOA is being issued under the applicable rules and regulations governing the use of construction materials. The documentation submitted has been reviewed and accepted by Miami-Dade County RER - Product Control Section to be used in Miami Dade County and other areas where allowed by the Authority Having Jurisdiction (AHJ).

This NOA shall not be valid after the expiration date stated below. The Miami-Dade County Product Control Section (In Miami Dade County) and/or the AHJ (in areas other than Miami Dade County) reserve the right to have this product or material tested for quality assurance purposes. If this product or material fails to perform in the accepted manner, the manufacturer will incur the expense of such testing and the AHJ may immediately revoke, modify, or suspend the use of such product or material within their jurisdiction. RER reserves the right to revoke this acceptance, if it is determined by Miami-Dade County Product Control Section that this product or material fails to meet the requirements of the applicable building code.

This product is approved as described herein, and has been designed to comply with the Florida Building Code, including the High Velocity Hurricane Zone.

**DESCRIPTION: Series "EKU-53" Outswing Aluminum French Door - L.M.I.**

**APPROVAL DOCUMENT:** Drawing No. **FN-EKU53-FD,** titled "EKU 53 Impact Doors – High Loads", sheets 1 through 13 of 13, dated 10/16/14, with revision #3 dated 04/30/15, prepared by Bromley-Cook Engineering, Inc., signed and sealed by William D. Cook, P.E., bearing the Miami-Dade County Product Control Revision stamp with the Notice of Acceptance number and expiration date by the Miami-Dade County Product Control Section.

**MISSILE IMPACT RATING: Large and Small Missile Impact Resistant**

**LABELING:** Each unit shall bear a permanent label with the manufacturer's name or logo, city, state, model/series, and following statement: "Miami-Dade County Product Control Approved", unless otherwise noted herein.

**RENEWAL** of this NOA shall be considered after a renewal application has been filed and there has been no change in the applicable building code negatively affecting the performance of this product.

**TERMINATION** of this NOA will occur after the expiration date or if there has been a revision or change in the materials, use, and/or manufacture of the product or process. Misuse of this NOA as an endorsement of any product, for sales, advertising or any other purposes shall automatically terminate this NOA. Failure to comply with any section of this NOA shall be cause for termination and removal of NOA.

**ADVERTISEMENT:** The NOA number preceded by the words Miami-Dade County, Florida, and followed by the expiration date may be displayed in advertising literature. If any portion of the NOA is displayed, then it shall be done in its entirety.

**INSPECTION:** A copy of this entire NOA shall be provided to the user by the manufacturer or its distributors and shall be available for inspection at the job site at the request of the Building Official.

This NOA **revises NOA# 12-0503.05** and consists of this page 1 and evidence pages E-1, E-2 and E-3, as well as approval document mentioned above.

The submitted documentation was reviewed by **Manuel Perez, P.E.**

MIAMI-DADE COUNTY APPROVED

6/15/16

**La Finestra, L.C.**

## NOTICE OF ACCEPTANCE: EVIDENCE SUBMITTED

### A. DRAWINGS

1. Manufacturer's die drawings and sections.
2. Drawing No. **FN-EKU53[FD,** titled "EKU-53 Impact Doors – High Loads", sheets 1 through 13 of 13, dated 10/16/14, with revision #3 dated 04/30/15, prepared by Bromley-Cook Engineering, Inc., signed and sealed by William D. Cook, P.E.

### B. TESTS

1. Test reports on: 1) Large Missile Impact Test per FBC, TAS 201-94
   2) Cyclic Wind Pressure Loading per FBC, TAS 203-94
   along with marked-up drawings and installation diagram of a 10 ft. high, eyebrow-top aluminum outswing doors, prepared by Hurricane Engineering & Testing, Inc., Test Report No. **HETI-11-3365,** dated 05/28/13, witnessed by Rafael E. Droz-Seda, P.E.
2. Test reports on: 1) Large Missile Impact Test per FBC, TAS 201-94
   2) Cyclic Wind Pressure Loading per FBC, TAS 203-94
   along with marked-up drawings and installation diagram of a 10 ft. high, arch-top aluminum outswing doors, prepared by Hurricane Engineering & Testing, Inc., Test Report No. **HETI-10-3010,** dated 04/14/10, witnessed by Candido F. Font, P.E.
   ***(Submitted under NOA# 10-0511.03)***
3. Test reports on: 1) Air Infiltration Test, per FBC, TAS 202-94
   2) Uniform Static Air Pressure Test, Loading per FBC TAS 202-94
   3) Water Resistance Test, per FBC, TAS 202-94
   4) Forced Entry Test, per FBC 2411 3.2.1 and TAS 202-94
   along with marked-up drawings and installation diagram of a 10 ft. high, arch-top aluminum outswing doors, prepared by Hurricane Engineering & Testing, Inc., Test Report No. **HETI-10-3009,** dated 04/14/10, witnessed by Candido F. Font, P.E.
   ***(Submitted under NOA# 10-0511.03)***
4. Test reports on: 1) Large Missile Impact Test per FBC, TAS 201-94
   2) Cyclic Wind Pressure Loading per FBC, TAS 203-94
   along with marked-up drawings and installation diagram of a 10 ft. high aluminum outswing pair of doors, prepared by Hurricane Engineering & Testing, Inc., Test Report No. **HETI-10-3003,** dated 04/14/10, witnessed by Candido F. Font, P.E.
   ***(Submitted under NOA# 10-0511.03)***
5. Test reports on: 1) Air Infiltration Test, per FBC, TAS 202-94
   2) Uniform Static Air Pressure Test, Loading per FBC TAS 202-94
   3) Water Resistance Test, per FBC, TAS 202-94
   4) Forced Entry Test, per FBC 2411 3.2.1 and TAS 202-94
   along with marked-up drawings and installation diagram of a 10 ft. high aluminum outswing pair of doors, prepared by Hurricane Engineering & Testing, Inc., Test Report No. **HETI-10-3002,** dated 04/14/10, witnessed by Candido F. Font, P.E.
   ***(Submitted under NOA# 10-0511.03)***

Manuel Perez

**Manuel Perez, P.E.**
**Product Control Examiner**
**NOA No. 14-1021.07**
**Expiration Date: February 27, 2018**
**Approval Date: June 23, 2016**

## NOTICE OF ACCEPTANCE: EVIDENCE SUBMITTED

**B. TESTS** (CONTINUED)

**6.** Test reports on: 1) Large Missile Impact Test per FBC, TAS 201-94
2) Cyclic Wind Pressure Loading per FBC, TAS 203-94
along with marked-up drawings and installation diagram of a 10 ft. high aluminum outswing pair of doors, prepared by Hurricane Engineering & Testing, Inc., Test Report No. **HETI-09-2677,** dated 04/14/10, witnessed by Candido F. Font, P.E.
***(Submitted under NOA# 10-0511.03)***

**7.** Test reports on: 1) Air Infiltration Test, per FBC, TAS 202-94
2) Uniform Static Air Pressure Test, Loading per FBC TAS 202-94
3) Water Resistance Test, per FBC, TAS 202-94
4) Forced Entry Test, per FBC 2411 3.2.1 and TAS 202-94
along with marked-up drawings and installation diagram of a 10 ft. high aluminum outswing pair of doors, prepared by Hurricane Engineering & Testing, Inc., Test Report No. **HETI-09-2676,** dated 04/14/10, witnessed by Candido F. Font, P.E.
***(Submitted under NOA# 10-0511.03)***

**8.** Test reports on: 1) Air Infiltration Test, per FBC, TAS 202-94
2) Uniform Static Air Pressure Test, Loading per FBC TAS 202-94
3) Water Resistance Test, per FBC, TAS 202-94
4) Large Missile Impact Test per FBC, TAS 201-94
5) Cyclic Wind Pressure Loading per FBC, TAS 203-94
6) Forced Entry Test, per FBC 2411 3.2.1 and TAS 202-94
along with marked-up drawings and installation diagram of an aluminum outswing entrance door, prepared by Fenestration Testing Laboratory, Inc., Test Report No. **FTL-4531,** dated 06/01/05, witnessed by Edmundo Largaespada, P.E.
***(Submitted under NOA# 05-0725.03)***

**9.** Test reports on: 1) Air Infiltration Test, per FBC, TAS 202-94
2) Uniform Static Air Pressure Test, Loading per FBC, TAS 202-94
3) Water Resistance Test, per FBC, TAS 202-94
4) Forced Entry Test, per FBC 2411 3.2.1 and TAS 202-94
along with marked-up drawings and installation diagram of an outswing aluminum entrance door, prepared by Fenestration Testing Laboratory, Inc., Test Report No. **FTL-3881,** dated 08/23/04, witnessed by Edmundo Largaespada, P.E.
***(Submitted under NOA # 05-0203.02)***

**Manuel Perez, P.E.**
**Product Control Examiner**
**NOA No. 14-1021.07**
**Expiration Date: February 27, 2018**
**Approval Date: June 23, 2016**

## NOTICE OF ACCEPTANCE: EVIDENCE SUBMITTED

### C. CALCULATIONS

1. Anchor verification calculations and structural analysis, complying with FBC-2007, dated 04/27/10 and revised on 08/18/10 to comply with **FBC-2010**, prepared by Bromley-Cook Engineering, Inc., signed and sealed by William D. Cook, P.E. ***(Submitted under NOA# 12-0503.05)***
2. Glazing complies with **ASTM E1300-04**

### D. QUALITY ASSURANCE

1. Miami–Dade Department of Regulatory and Economic Resources (RER).

### E. MATERIAL CERTIFICATIONS

1. Notice of Acceptance No. **13–0129.27** issued to **E.I. DuPont DeNemours & Co., Inc.** for their **"DuPont Butacite® PVB Interlayer"** dated 04/11/13, expiring on 12/11/16.

### F. STATEMENTS

1. Statement letter of conformance, complying with **FBC-5th Edition (2014)**, dated October 16, 2014, issued by Bromley-Cook Engineering, Inc., signed and sealed by William D. Cook, P.E.
2. Statement letter of no financial interest, dated October 16, 2014, issued by Bromley-Cook Engineering, Inc., signed and sealed by William D. Cook, P.E.
3. Laboratory compliance letter for Test Report No. **FTL- 4531**, issued by Fenestration Testing Laboratory, Inc., dated July 11, 2005, signed and sealed by Edmundo Largaespada, P.E. ***(Submitted under NOA # 05-0725.03)***
4. Laboratory compliance letter for Test Report No. **FTL- 3881**, issued by Fenestration Testing Laboratory, Inc., dated October 18, 2004, signed and sealed by Edmundo Largaespada, P.E. ***(Submitted under NOA # 05-0203.02)***

### G. OTHERS

1. Notice of Acceptance No. **12-0503.05**, issued to La Finestra, L.C. for their Series "EKU-53" Outswing Aluminum French Door – L.M.I., approved on 07/26/12 and expiring on 02/27/18.

**Manuel Perez, P.E.**
**Product Control Examiner**
**NOA No. 14-1021.07**
**Expiration Date: February 27, 2018**
**Approval Date: June 23, 2016**

# LA FINESTRA, LC  SERIES: EKU 53 OUTSWING FRENCH DOOR (HIGH LOAD)

## TYPICAL UNIT ELEVATIONS

MAX. DOOR SIZES SHOWN
MULTIPLE UNITS STACKED SIDE BY SIDE
MUST HAVE APPROVED MULLIONS BETWEEN EACH WINDOW FRAME
*(SEE ALTERNATE CONFIGURATIONS ON PAGE 2)

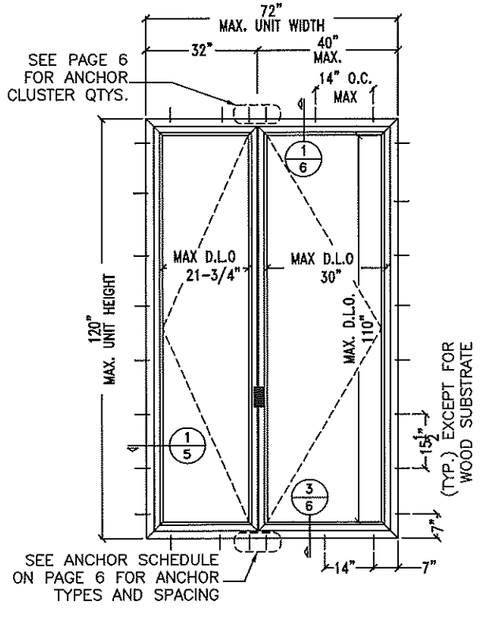


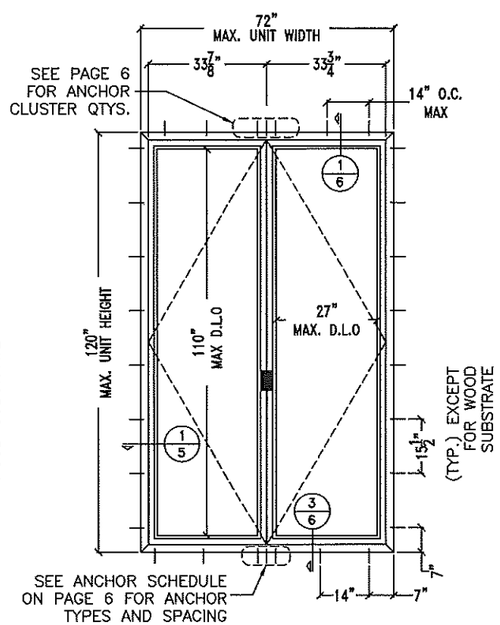


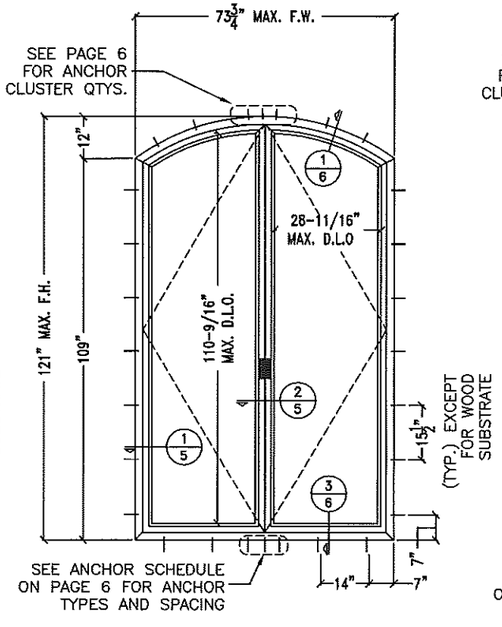


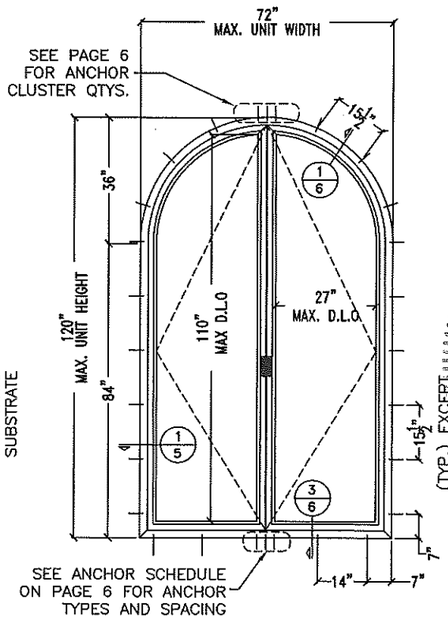


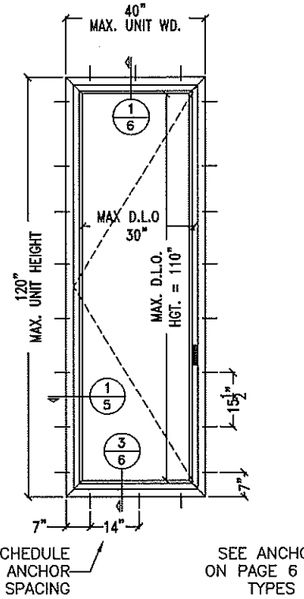


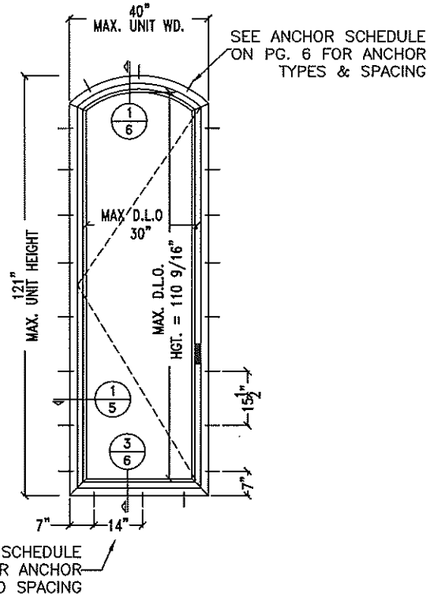


NOTES:

1. THIS SYSTEM HAS BEEN DESIGNED TO COMPLY WITH THE REQUIREMENTS OF THE HIGH VELOCITY HURRICANE ZONE AS DESCRIBED IN THE "FLORIDA BULDING CODE" 5TH EDITION (2014)
2. THIS WINDOW SYSTEM HAS BEEN TESTED, ENGINEERED AND APPROVED FOR DESIGN PRESSURES NOT TO EXCEED THOSE SHOWN IN SCHEDULE.
3. BUCK, OPENINGS & BUCK FASTENERS MUST BE DESIGNED & INSTALLED TO WITHSTAND WIND LOADS FOR EACH APPLICATION. THE DESIGN & ENGINEERING OF BUCKS SHALL BE PROVIDED BY "THE ENGINEER OF RECORD"
4. BUCK FASTENERS MAY NOT EXCEED 16" O.C. SPACING AROUND OPENINGS.
5. THE SYSTEM SHOWN HEREIN WAS TESTED FOR WATER, AIR, IMPACT, CYCLIC & UNIFORM STATIC AIR PRESSURE TESTING IN CONFORMANCE WITH DADE COUNTY PROTOCOLS TAS-201, 202 & 203.
6. ONE-THIRD INCREASE IN ALLOWABLE MATERIAL STRESS LIMITS FOR SHORT DURATION WIND LOAD NOT USED IN THE DESIGN CALCULATIONS. EXCEPT 1.6 WINDLOAD FACTOR FOR WOOD.

SEE PAGE 4 FOR ALLOWABLE WIND PRESSURES AND GLASS CHART.

PRODUCT REVISED
as complying with the Florida Building Code
Acceptance No 14-1021.07
Expiration Date Feb 27, 2018
By Manuel Perez
Miami Dade Product Control

LA FINESTRA, L.C.
ITALIAN WINDOWS & DOORS
2790 Northwest 104th Court
Miami, FL 33172-2175
Phone (305) 599-8093
Fax (305) 592-4671

BROMLEY DOOR ENGINEERING, INC.
STRUCTURAL ENGINEERING SERVICES
3440 N.W. 33RD AVENUE SUITE 106
FORT LAUDERDALE, FL 33309
William D. Cook, P.E. #49904

PRODUCT:
EKU-53
IMPACT DOORS
HIGH LOAD

| REVISIONS | | | | |
|---|---|---|---|---|
| No. | DATE | BY | DESCRIPTION | |
| 1 | 4/30/12 | MG | CODE UPGRADE | |
| 2 | 10/16/14 | MG | ADDED ALTERNATE EXTRUSIONS | |
| 3 | 04/30/15 | CD | DWG NUMBER | |

DATE: 10/16/2014
SCALE: 3/8" = 1'-0"
DWG. BY: LA FIN
CHK. BY:

DRAWING No.:
FN-EKU53-FD

SHEET: 1 OF 13

# ALTERNATE CONFIGURATIONS

UNITS MAY BE INSTALLED WITH A MIAMI-DADE COUNTY APPROVED MULLION BETWEEN EACH DOOR AND/OR FRAME. THE LOWEST DESIGN PRESSURE FOR THE DOOR, TRANSOM OR MULLION WILL CONTROL

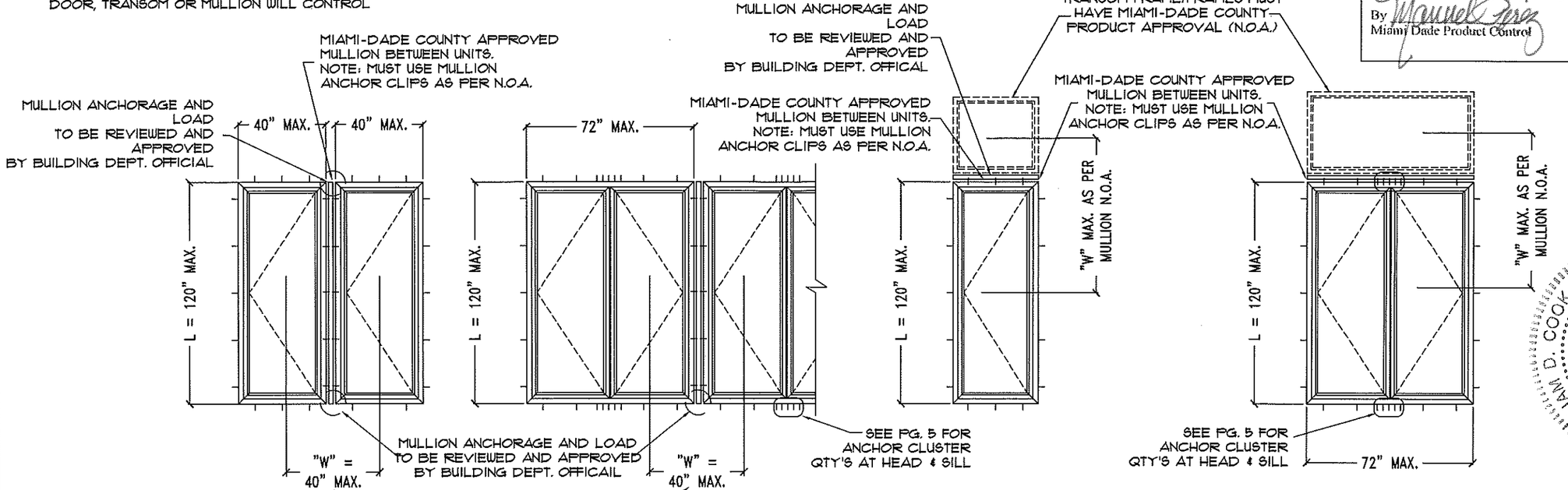


PRODUCT REVISED
as complying with the Florida Building Code
Acceptance No 14.1021.07
Expiration Date Feb. 27, 2018
By Manuel Perez
Miami Dade Product Control

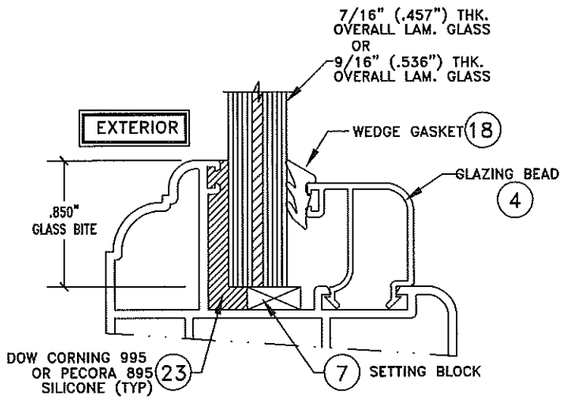


GLAZING DETAIL
GL-1, GL-3 THRU GL-8 (LAMINATED)
SCALE: N.T.S.

NOTE: SEE ALLOWABLE D.L.O. SCHEDULE ON PG. 4 FOR MAX. DESIGN PRESSURES

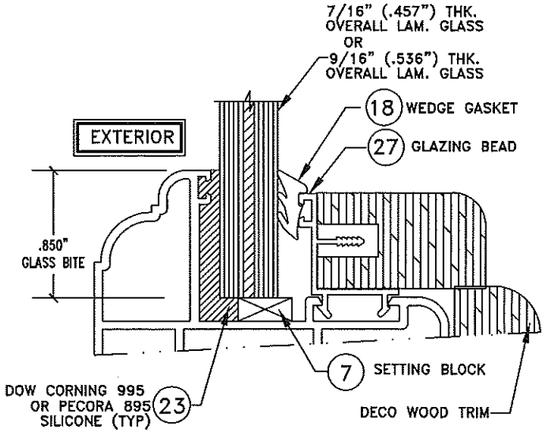


"OPTIONAL"
GLAZING DETAIL GL-1 (WITH WOOD TRIM)
SCALE: N.T.S.
NOTE: MAX. DESIGN PRESSURE = +80, -80 P.S.F.

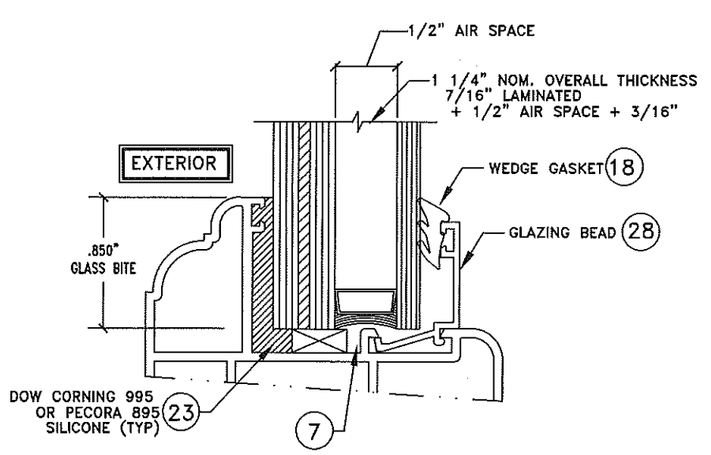


GLAZING DETAIL GL-2(LAMINATED/INSULATED)
SCALE: N.T.S.
NOTE: MAX. DESIGN PRESSURE = +80, -80 P.S.F.


LA FINESTRA, L.C.
ITALIAN WINDOWS & DOORS
2790 Northwest 104th Court
Miami, FL 33172-2175
Phone (305) 599-8093
Fax (305) 592-4671



BROMLEY-COOK ENGINEERING, INC.
STRUCTURAL ENGINEERING SERVICES
5440 N.W. 33RD AVENUE SUITE 190
FORT LAUDERDALE, FL 33309
WILLIAM D. COOK, FL P.E. #43904


WILLIAM D. COOK LICENSE NUMBER 43904 STATE OF FLORIDA PROFESSIONAL ENGINEER

PRODUCT:
EKU-53
IMPACT DOORS
HIGH LOAD

REVISIONS

| No. | DATE | BY | DESCRIPTION |
|---|---|---|---|
| 1 | 4/30/12 | MG | CODE UPGRADE |
| 2 | 10/16/14 | MG | ADDED ALTERNATE EXTRUSIONS |
| 3 | 04/30/15 | CD | DWG NUMBER |

DATE: 10/16/2014
SCALE: N/A
DWG. BY: LA FIN
CHK. BY:

DRAWING No.:
FN-EKU53-FD

SHEET: 2 OF 13

# SERIES EKU-53 ALUMINUM OUTSWING DOOR
## (UNIT ELEVATIONS VIEWED FROM EXTERIOR)

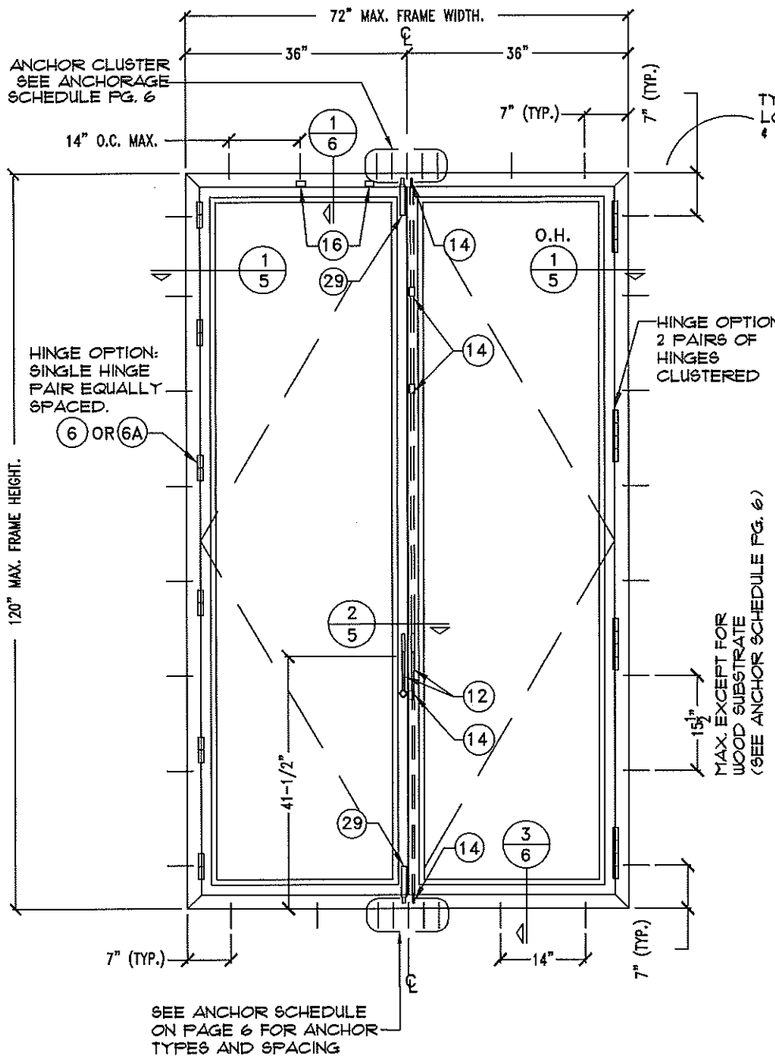


NOTE: FOR ODD NUMBER OF ANCHORS IN CLUSTER, INSTALL ONE ANCHOR IN CENTER OF INTERLOCK.

### HARDWARE

- (12) OPERATING HANDLE
- (14) 5-POINT LOCKING SYSTEM
- (16) MUSHROOM HEAD AND KEEPERS
- (29) FLUSH BOLT

### HINGE OPTIONS PER LEAF:

**(6) OR (6A)**

RECTANGULAR DOOR 120" TALL:
6 INDIVIDUAL PAIRS
OR
(4) CLUSTERS OF 2 PAIRS.

ARCH TOP DOOR 120" TALL:
5 INDIVIDUAL PAIRS
OR
(4) CLUSTERS OF 2 PAIRS.

RECTANGULAR DOOR 96" TALL:
4 INDIVIDUAL PAIRS
OR
(3) CLUSTERS OF 2 PAIRS.

ARCH TOP DOOR 96" TALL:
4 INDIVIDUAL PAIRS
OR
(3) CLUSTERS OF 2 PAIRS.

### GLAZING

SEE ALLOWABLE GLASS D.L.O. CHART ON PAGE 4

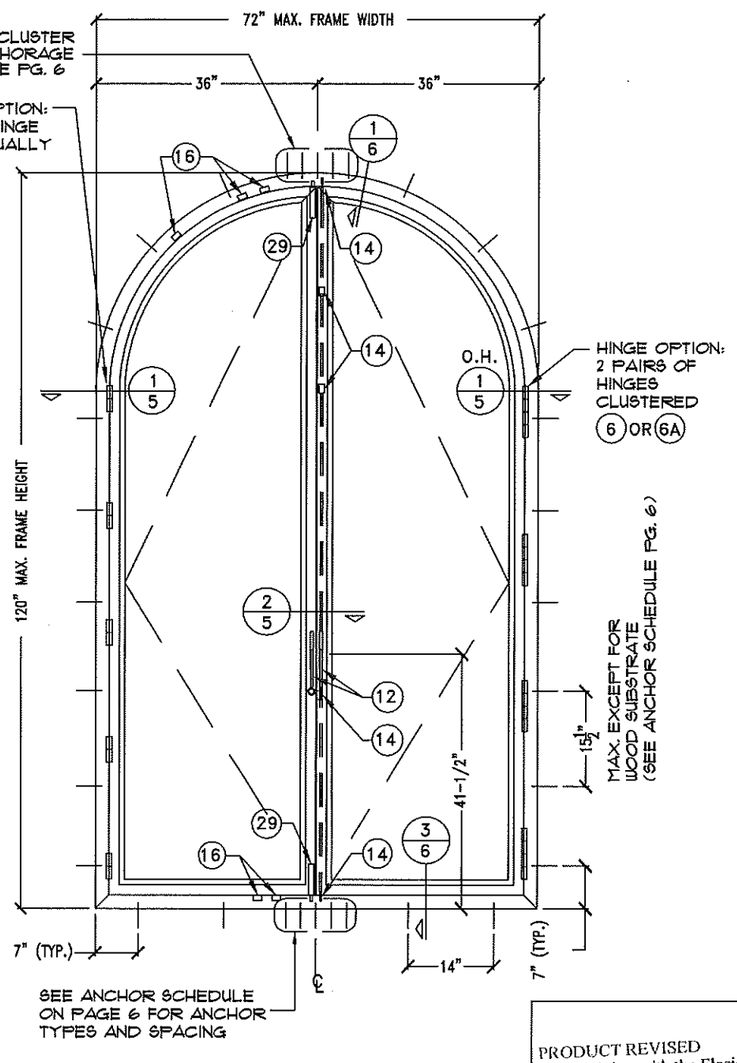


NOTE: FOR ODD NUMBER OF ANCHORS IN CLUSTER, INSTALL ONE ANCHOR IN CENTER OF INTERLOCK.

PRODUCT REVISED
as complying with the Florida Building Code
Acceptance No 14-1021.07
Expiration Date Feb. 27, 2018
By Manuel Perez
Miami Dade Product Control


LA FINESTRA, L.C.
ITALIAN WINDOWS & DOORS
2790 Northwest 104th Court
Miami, FL 33172-2175
Phone (305) 599-8093
Fax (305) 592-4671

BROWLEY COOKS ENGINEERING, INC.
STRUCTURAL ENGINEERING SERVICES
16440 N.W. 38RD AVENUE SUITE 100
FORT LAUDERDALE, FL 33309
WILLIAM D. COOK, P.E. FL#43904


PRODUCT: EKU-53 IMPACT DOORS HIGH LOAD

| REVISIONS | | | |
|---|---|---|---|
| No. | DATE | BY | DESCRIPTION |
| 1 | 4/30/12 | MG | CODE UPGRADE |
| 2 | 10/16/14 | MG | ADDED ALTERNATE EXTRUSIONS |
| 3 | 04/30/15 | CD | DWG. NUMBER |

DATE: 10/16/2014
SCALE: N/A
DWG. BY: LA FIN
CHK. BY:

DRAWING No.: FN-EKU53-FD

SHEET: 3 OF 13

## DOOR GLASS SIZE CHART
MAX. ALLOWABLE DESIGN LOADS (P.S.F.)
FOR IMPACT DOORS

| D.L.O. SIZE | | GLASS TYPE GL-1 | | GLASS TYPE GL-2 | | GLASS TYPE GL-3 | | GLASS TYPE GL-4 | | GLASS TYPE GL-5 | | GLASS TYPE GL-6 | | GLASS TYPE GL-7 | | GLASS TYPE GL-8 | |
|---|---|---|---|---|---|---|---|---|---|---|---|---|---|---|---|---|---|
| WIDTH (W) | HEIGHT (L) | EXT(+) | EXT(−) | EXT(+) | EXT(−) | EXT(+) | EXT(−) | EXT(+) | EXT(−) | EXT(+) | EXT(−) | EXT(+) | EXT(−) | EXT(+) | EXT(−) | EXT(+) | EXT(−) |
| 21 3/4" | 70 3/4" | 110 | 110 | 80 | 80 | 110 | 110 | 110 | 110 | 110 | 110 | 110 | 110 | 80 | 80 | 80 | 80 |
| 25 3/4" | | 110 | 110 | 80 | 80 | 110 | 110 | 110 | 110 | | | 110 | 110 | 80 | 80 | 80 | 80 |
| 27 1/2" | | 110 | 110 | 80 | 80 | 110 | 110 | 90 | 90 | | | 110 | 110 | 80 | 80 | 80 | 80 |
| 28 15/16" | | 110 | 110 | 80 | 80 | | | 90 | 90 | | | 110 | 110 | 80 | 80 | 80 | 80 |
| 30" | | 110 | 110 | 80 | 80 | | | 90 | 90 | | | 110 | 110 | 80 | 80 | 80 | 80 |
| 30 3/4" | | | | | | | | 90 | 90 | | | 110 | 110 | 80 | 80 | 80 | 80 |
| 42 3/8" | | | | | | | | 90 | 90 | | | | | 80 | 80 | 80 | 80 |
| 65 3/4" | | | | | | | | | | | | | | 80 | 80 | 80 | 80 |
| 21 3/4" | 80" | 110 | 110 | 80 | 80 | 110 | 110 | 110 | 110 | 110 | 110 | | | | | | |
| 25 3/4" | | 110 | 110 | 80 | 80 | 110 | 110 | 110 | 110 | | | | | | | | |
| 27 1/2" | | 110 | 110 | 80 | 80 | 110 | 110 | 90 | 90 | | | | | | | | |
| 28 15/16" | | 110 | 110 | 80 | 80 | | | 90 | 90 | | | | | | | | |
| 30" | | 110 | 110 | 80 | 80 | | | 90 | 90 | | | | | | | | |
| 42 3/8" | | | | | | | | 90 | 90 | | | | | | | | |
| 21 3/4" | 85" | 110 | 110 | 80 | 80 | 110 | 110 | 110 | 110 | 110 | 110 | | | | | | |
| 25 3/4" | | 110 | 110 | 80 | 80 | 110 | 110 | 110 | 110 | | | | | | | | |
| 27 1/2" | | 110 | 110 | 80 | 80 | 110 | 110 | 90 | 90 | | | | | | | | |
| 28 15/16" | | 110 | 110 | 80 | 80 | 98.9 | 98.9 | 90 | 90 | | | | | | | | |
| 30" | | 110 | 110 | 80 | 80 | 98.9 | 98.9 | 90 | 90 | | | | | | | | |
| 30 3/4" | | 110 | 110 | | | 98.9 | 98.9 | 90 | 90 | | | | | | | | |
| 42 3/8" | | | | | | 98.9 | 98.9 | 90 | 90 | | | | | | | | |
| 21 3/4" | 87" | 110 | 110 | 80 | 80 | | | 90 | 90 | | | | | | | | |
| 27 1/2" | | 110 | 110 | 80 | 80 | | | 90 | 90 | | | | | | | | |
| 28 15/16" | | 110 | 110 | 80 | 80 | | | 90 | 90 | | | | | | | | |
| 30 3/4" | | 110 | 110 | 80 | 80 | | | 90 | 90 | | | | | | | | |
| 42 3/8" | | | | | | | | 90 | 90 | | | | | | | | |
| 21 3/4" | 90" | 80 | 80 | 80 | 80 | | | | | | | | | | | | |
| 27 1/2" | | 80 | 80 | 80 | 80 | | | | | | | | | | | | |
| 28 15/16" | | 80 | 80 | 80 | 80 | | | | | | | | | | | | |
| 21 3/4" | 96" | 80 | 80 | 80 | 80 | | | | | | | | | | | | |
| 27 1/2" | | 80 | 80 | 80 | 80 | | | | | | | | | | | | |
| 28 15/16" | | 80 | 80 | 80 | 80 | | | | | | | | | | | | |
| 21 3/4" | 104" | 80 | 80 | 80 | 80 | | | | | | | | | | | | |
| 27 1/2" | | 80 | 80 | 80 | 80 | | | | | | | | | | | | |
| 28 15/16" | | 80 | 80 | 80 | 80 | | | | | | | | | | | | |
| 21 3/4" | 108" | 80 | 80 | 80 | 80 | | | | | | | | | | | | |
| 27 1/2" | | 80 | 80 | 80 | 80 | | | | | | | | | | | | |
| 28 15/16" | | 80 | 80 | 80 | 80 | | | | | | | | | | | | |
| 21 3/4" | 110 1/2" | 80 | 80 | 80 | 80 | | | | | | | | | | | | |
| 27 1/2" | | 80 | 80 | 80 | 80 | | | | | | | | | | | | |
| 28 15/16" | | 80 | 80 | 80 | 80 | | | | | | | | | | | | |

= NOT ALLOWABLE

**MAX. PANEL FRAME WIDTH**
D.L.O. +9" FOR DIE #16012 (#2)
D.L.O. + 7.62" FOR DIE #16013 (#2A)

**MAX. PANEL FRAME HEIGHT**
D.L.O. +9" FOR DIE #16012 (#2)
D.L.O. + 7.62" FOR DIE #16013 (#2A)

**WATER INFILTRATION TEST PRESSURE**

-DOORS UP TO 96" TALL : 16.5 PSF

-DOORS UP TO 120" TALL : 12 PSF
WITH STANDARD THRESHOLD

- ADA COMPLIANT THRESHOLD NOT APPROVED FOR WATER INFILTRATION.

## GLASS SCHEDULE
LARGE MISSILE IMPACT RESISTANT

GL-1 = 7/16" (.458") LAMINATED
3/16" (.182") H.S. –
.090" P.V.B. BUTACITE BY DUPONT INTERLAYER –
3/16" H.S.

GL-2 = 1-1/4" (1.136") INSULATED/LAMINATED
3/16" (.182") H.S. –
.090" P.V.B. BUTACITE BY DUPONT INTERLAYER –
3/16" H.S. –
1/2" AIR SPACE –
3/16" TEMPERED

GL-3 = 7/16" (.458") LAMINATED
3/16" (.182") ANN.–
.090" P.V.B. SAFLEX BY EASTMAN CHEMICAL COMPANY INTERLAYER –
3/16" ANN.

GL-4 = 7/16" (.454") LAMINATED
3/16" (.182") H.S. –
.090" P.V.B. SAFLEX BY EASTMAN CHEMICAL COMPANY INTERLAYER –
3/16" H.S.

GL-5 = 7/16" (.454") LAMINATED
3/16" (.182") ANN. –
.090" P.V.B. BUTACITE BY DUPONT INTERLAYER –
3/16" ANN.

GL-6 = 9/16" (.536") LAMINATED
1/4" (.223") H.S. –
.090" P.V.B. BUTACITE BY DUPONT INTERLAYER –
1/4" H.S.

GL-7 = 9/16" (.536") LAMINATED
1/4" (.223") H.S. –
.090" SENTRY GLASS BY DUPONT INTERLAYER –
1/4" H.S.

GL-8 = 7/16" (.454") LAMINATED
3/16" (.182") H.S. –
.090" SENTRY GLASS BY DUPONT INTERLAYER –
3/16" H.S.

## TESTED GLASS TYPES (MAX. D.L.O SIZE & PRESSURES)

| GLASS TYPE | MAXIMUM D.L.O. | MAX DESIGN PRESSURE |
|---|---|---|
| GL-1 | 30" W x 87" H<br>27" W x 110" H | +110.0/-110.0 PSF<br>+80.0/-80.0 PSF |
| GL-2 | 27 1/2" W x 110 1/2" H<br>28 15/16" W x 110" H | +80.0/-80.0 PSF<br>+80.0/-80.0 PSF |
| GL-3 | 27 1/2" W x 85" H<br>30" W x 85" H | +110.0/-110.0 PSF<br>+98.9/-98.9 PSF |
| GL-4 | 30" W x 85" H<br>28 15/16" W x 110" H | +110.0/-110.0 PSF<br>+80.0/-80.0 PSF |
| GL-5 | 21 3/4" W x 85" H | +110.0/-110.0 PSF |
| GL-6 | 30 3/4" W x 70 3/4" H | +100.0/-110.0 PSF |
| GL-7 | 65 3/4" W x 70 3/4" H | +80.0/-80.0 PSF |
| GL-8 | 65 3/4" W x 70 3/4" H | +80.0/-80.0 PSF |

PRODUCT REVISED
as complying with the Florida Building Code
Acceptance No 14-1021.07
Expiration Date Feb 27,2018
By Manuel Perez
Miami Dade Product Control


LA FINESTRA, L.C.
ITALIAN WINDOWS & DOORS
2790 Northwest 104th Court
Miami, FL 33172-2175
Phone (305) 599-8093
Fax (305) 592-4671

BROMLEY-COOK ENGINEERING, INC.
STRUCTURAL ENGINEERING SERVICES
5440 N.W. 33RD AVENUE, SUITE 100
FORT LAUDERDALE, FL 33309
WILLIAM D. COOK FL P.E. #43904


WILLIAM D. COOK LICENSE #43904 STATE OF FLORIDA PROFESSIONAL ENGINEER

PRODUCT: EKU-53 IMPACT DOORS HIGH LOAD

| REVISIONS | | | | |
|---|---|---|---|---|
| No. | DATE | BY | DESCRIPTION | |
| 1 | 4/30/12 | MG | CODE UPGRADE | |
| 2 | 10/16/14 | MG | ADDED ALTERNATE EXTRUSIONS | |
| 3 | 04/30/15 | CD | DWG NUMBER | |

DATE: 10/16/2014
SCALE: N/A
DWG. BY: LA FIN
CHK. BY:
DRAWING No.: FN-EKU53-FD
SHEET: 4 OF 13

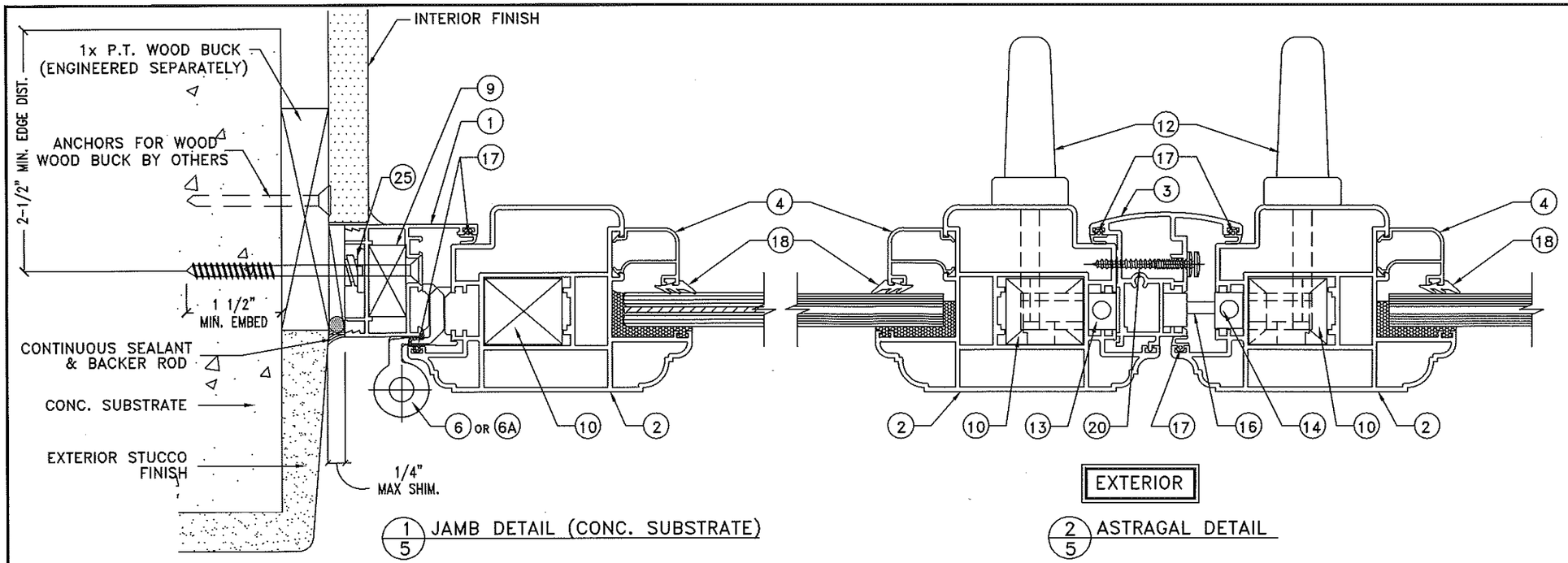


1/5 JAMB DETAIL (CONC. SUBSTRATE)

2/5 ASTRAGAL DETAIL

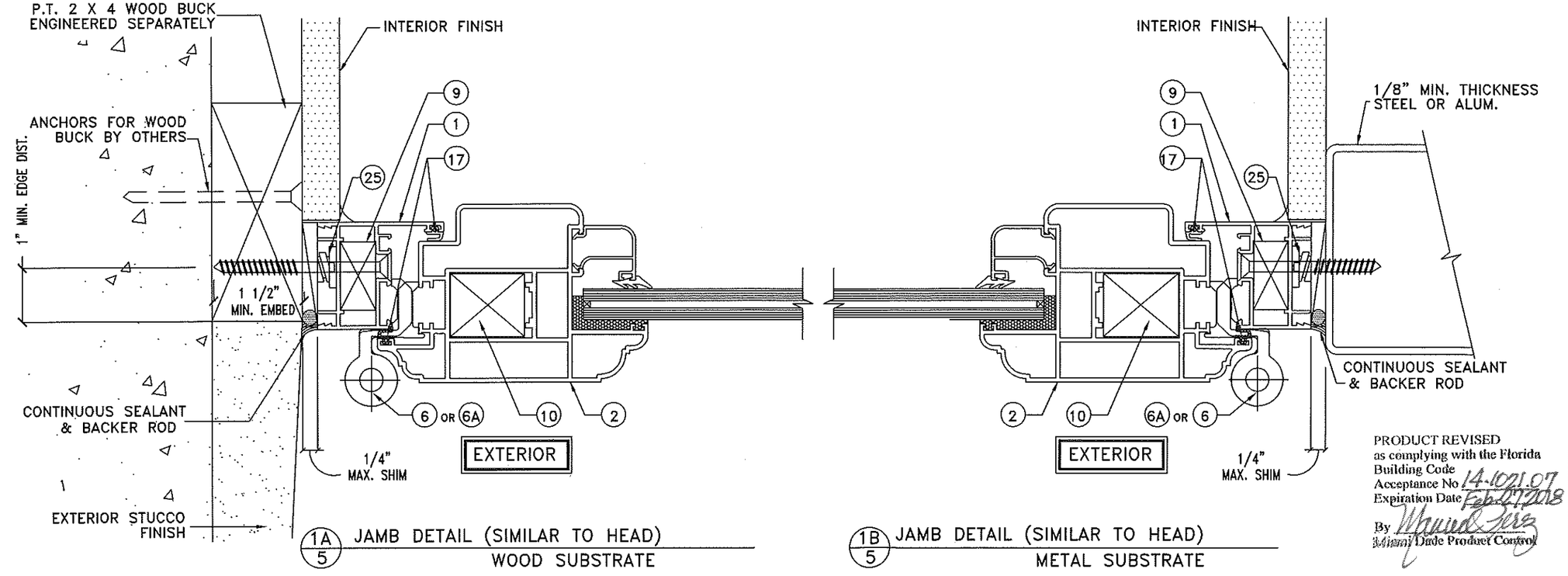


1A/5 JAMB DETAIL (SIMILAR TO HEAD) WOOD SUBSTRATE

1B/5 JAMB DETAIL (SIMILAR TO HEAD) METAL SUBSTRATE

PRODUCT REVISED
as complying with the Florida Building Code
Acceptance No 14-1021.07
Expiration Date Feb 27 2018
By
Miami-Dade Product Control

LA FINESTRA, L.C.
ITALIAN WINDOWS & DOORS
2790 Northwest 104th Court
Miami, FL 33172-2175
Phone (305) 599-8093
Fax (305) 592-4671

BROMLEY COOR ENGINEERING, INC.
STRUCTURAL ENGINEERING SERVICES
5440 N.W. 33RD AVENUE SUITE 100
FORT LAUDERDALE, FL 33309
WILLIAM B. COOR FL. P.E. #39804

PRODUCT:
EKU-53
IMPACT DOORS
HIGH LOAD

| REVISIONS | | | |
|---|---|---|---|
| No. | DATE | BY | DESCRIPTION |
| 1 | 4/30/12 | MG | CODE UPGRADE |
| 2 | 10/16/14 | MG | ADDED ALTERNATE EXTRUSIONS |
| 3 | 04/30/15 | CD | DWG NUMBER |

DATE: 10/16/2014
SCALE: AS NOTED
DWG. BY: LA FIN
CHK. BY:

DRAWING No.:
FN-EKU53-FD

SHEET: 5 OF 13

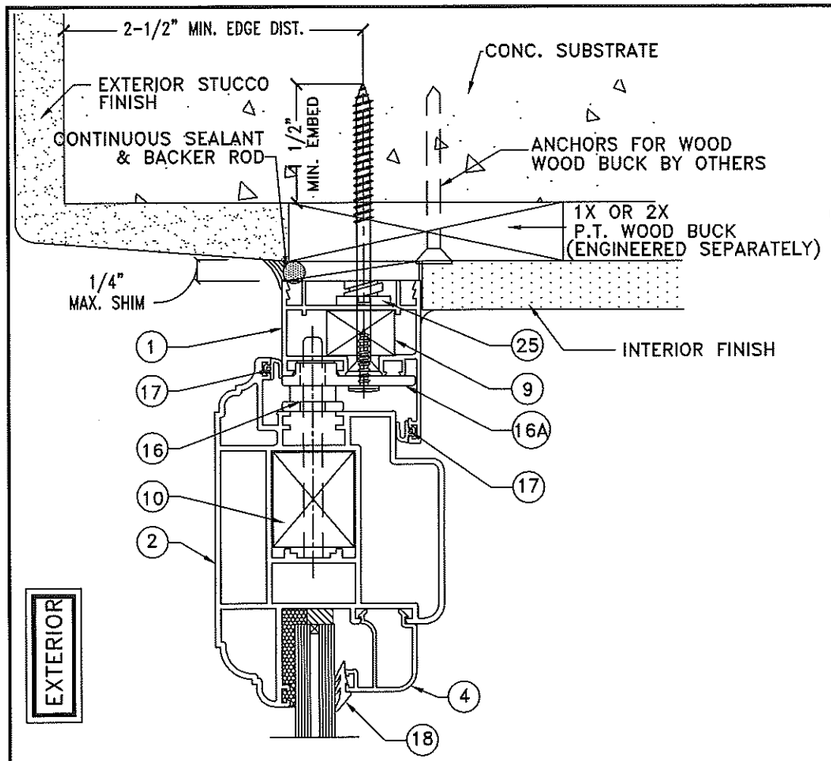


1/6 HEAD DETAIL (CONC. SUBSTRATE)

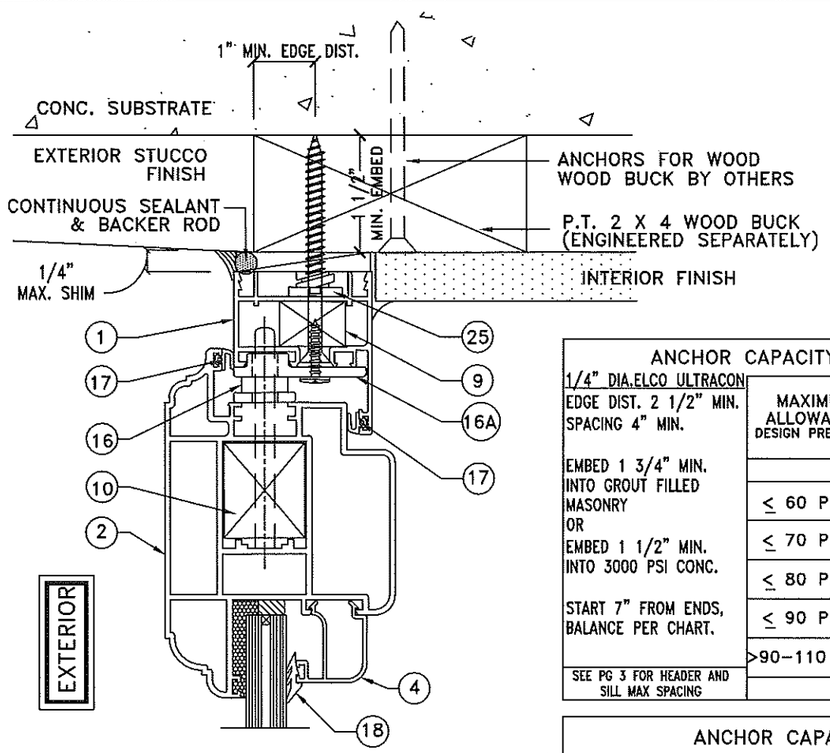


3/6 HEAD DETAIL (WOOD SUBSTRATE)

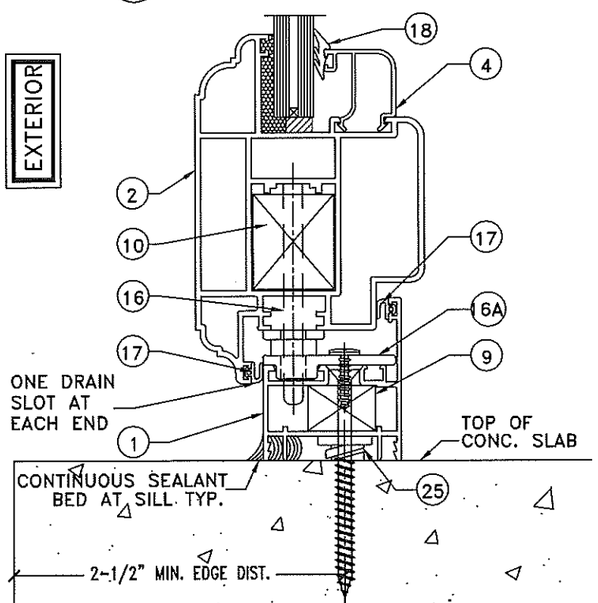


2/6 SILL DETAIL (STANDARD THRESHOLD)

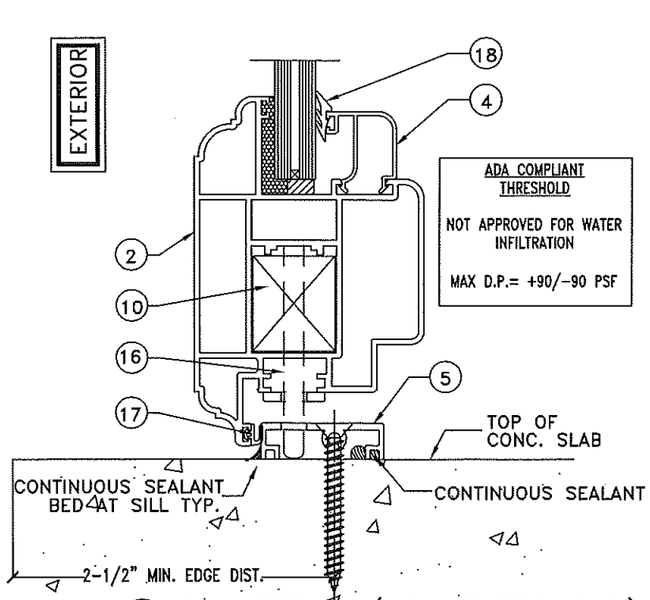


2/6 SILL DETAIL (ADA THRESHOLD)
SCALE: 1/4"= 1'-0"

PRODUCT REVISED
as complying with the Florida Building Code
Acceptance No 14-1021.07
Expiration Date Feb 27 2018
By Manuel Perez
Miami Dade Product Control

ANCHOR CAPACITY CHART (CONCRETE SUBSTRATE)

| 1/4" DIA.ELCO ULTRACON EDGE DIST. 2 1/2" MIN. SPACING 4" MIN. | MAXIMUM ALLOWABLE DESIGN PRESSURE | ANCHORS AT JAMBS | QTY. ANCHORS AT HEAD OR SILL INTERLOCK (W/ FRAME INSERT) | |
|---|---|---|---|---|
| | | | UP TO 96" | UP TO 120" |
| EMBED 1 3/4" MIN. INTO GROUT FILLED MASONRY OR EMBED 1 1/2" MIN. INTO 3000 PSI CONC. START 7" FROM ENDS, BALANCE PER CHART. | ≤ 60 P.S.F. | 15-1/2"C/C | 2 | 3 |
| | ≤ 70 P.S.F. | 15-1/2"C/C | 2 | 3 |
| | ≤ 80 P.S.F. | 15-1/2"C/C | 3 | 3 |
| | ≤ 90 P.S.F. | 15-1/2"C/C | 3 | N/A |
| | >90-110 P.S.F | 15-1/2"C/C | 3 | N/A |
| SEE PG 3 FOR HEADER AND SILL MAX SPACING | | | SPACED 4" APART | |

ANCHOR CAPACITY CHART (STEEL SUBSTRATE)

| #14 P.H.S.M.S. OR #14 SELF DRILLING INTO 1/8" THK. ASTM A36 START 7" FROM ENDS, BALANCE PER CHART. | MAXIMUM ALLOWABLE DESIGN PRESSURE | ANCHORS AT JAMBS | QTY. ANCHORS AT HEAD OR SILL INTERLOCK (W/ FRAME INSERT) | |
|---|---|---|---|---|
| | | | UP TO 96" | UP TO 120" |
| | ≤ 60 P.S.F. | 15-1/2"C/C | 2 | 3 |
| | ≤ 70 P.S.F. | 15-1/2"C/C | 2 | 3 |
| | ≤ 80 P.S.F. | 15-1/2"C/C | 3 | 3 |
| | ≤ 90 P.S.F. | 15-1/2"C/C | 3 | N/A |
| SEE PG 3 FOR HEADER AND SILL MAX SPACING | >90-110 P.S.F | 15-1/2"C/C | 3 | N/A |
| | | | SPACED 2 1/2" APART | |

ANCHOR CAPACITY CHART (WOOD SUBSTRATE)

| #14 P.H.S.M.S. OR #14 WOOD SCREW EMBED 1 1/2" MIN. INTO NO. 2 SYP. START 7" FROM ENDS, BALANCE PER CHART. | MAXIMUM ALLOWABLE DESIGN PRESSURE | ANCHORS AT JAMBS | QTY. ANCHORS AT HEAD OR SILL INTERLOCK (W/ FRAME INSERT) | |
|---|---|---|---|---|
| | | | UP TO 96" | UP TO 120" |
| | ≤ 60 P.S.F. | 12" C/C | 4 | 5 |
| | ≤ 70 P.S.F. | 12" C/C | 4 | 5 |
| | ≤ 80 P.S.F. | 12" C/C | 5 | 6 |
| | ≤ 90 P.S.F. | 12" C/C | 5 | N/A |
| SEE PG 3 FOR HEADER AND SILL MAX SPACING | >90-110 P.S.F | 12" C/C | 6 | N/A |
| | | | SPACED 2 1/2" APART | |

LA FINESTRA, L.C.
ITALIAN WINDOWS & DOORS
2790 Northwest 104th Court
Miami, FL 33172-2175
Phone (305) 599-8093
Fax (305) 592-4671

BROWLEY-COOK ENGINEERING, INC.
STRUCTURAL ENGINEERING SERVICES
5440 N.W. 33RD AVENUE SUITE 100
FORT LAUDERDALE, FL 33309
WILLIAM D. COOK FL. P.E. #43904

REVISIONS

| No. | DATE | BY | DESCRIPTION |
|---|---|---|---|
| 1 | 4/30/12 | MG | CODE UPGRADE |
| 2 | 10/16/14 | MG | ADDED ALTERNATE EXTRUSIONS |
| 3 | 04/30/15 | CD | DWG NUMBER |

PRODUCT: EKU-53 IMPACT DOORS HIGH LOAD

DATE: 10/16/2014
SCALE: 1/4" = 1'-0"
DWG. BY: LA FIN
CHK. BY:

DRAWING No.: FN-EKU53-FD

SHEET: 6 OF 13

# PROFILE COMBINATIONS

NOTE: PLEASE SEE D.P. LIMITATIONS FOR GLAZING ON SHEET 4

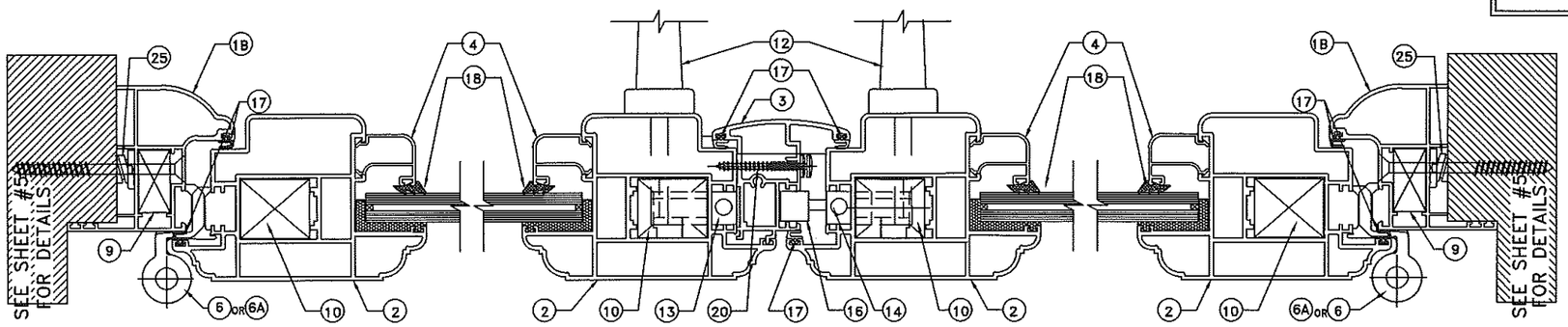


EXTERIOR

COMBINATION 1

MAXIMUM P.S.F. @ 96" +110.00 −110.00 DESIGN PRESSURE − WATER INFILTRATION TEST PRESSURE = 13.5 PSF
MAXIMUM P.S.F. @ 120" +80.00 −80.00 DESIGN PRESSURE − WATER INFILTRATION TEST PRESSURE = 12.0 PSF

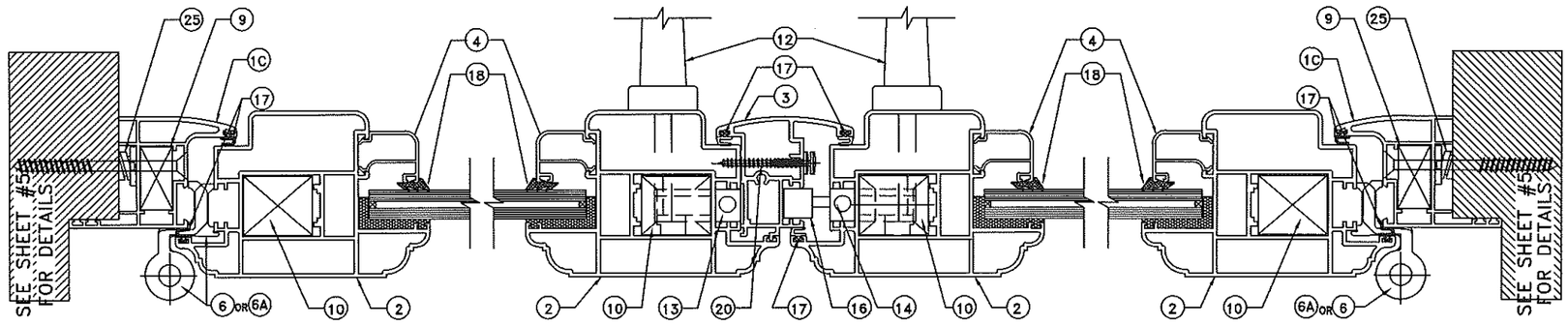


EXTERIOR

COMBINATION 2

MAXIMUM P.S.F. @ 96" +110.00 −110.00 DESIGN PRESSURE − WATER INFILTRATION TEST PRESSURE = 13.5 PSF
MAXIMUM P.S.F. @ 120" +80.00 −80.00 DESIGN PRESSURE − WATER INFILTRATION TEST PRESSURE = 12.0 PSF

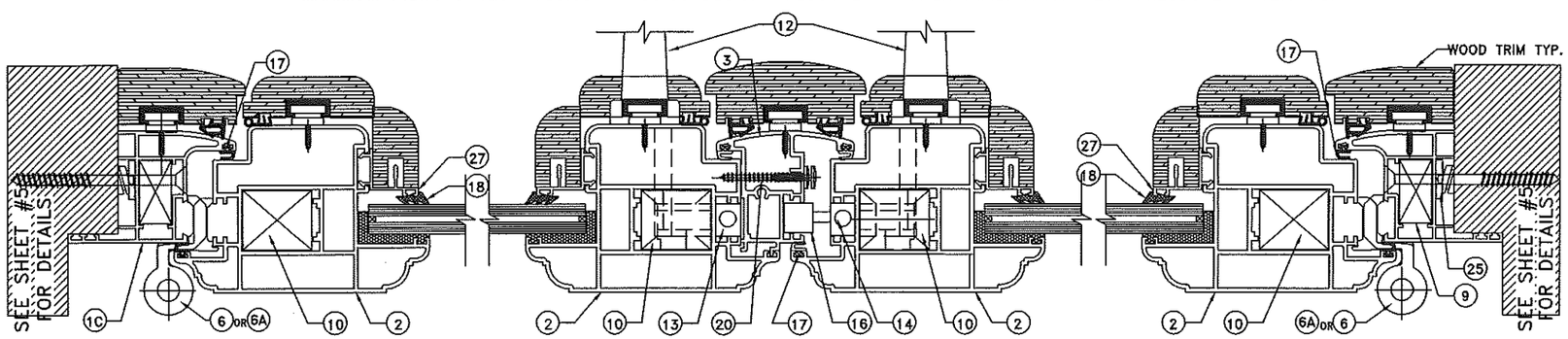


EXTERIOR

COMBINATION 2 WITH WOOD TRIM

MAXIMUM P.S.F. @ 120" +80.00 −80.00 DESIGN PRESSURE − WATER INFILTRATION TEST PRESSURE = 12.0 PSF

PRODUCT REVISED
as complying with the Florida
Building Code
Acceptance No 14-1021.07
Expiration Date Feb. 27, 2018
By Manuel Perez
Miami Dade Product Control


LA FINESTRA, L.C.
ITALIAN WINDOWS & DOORS
2790 Northwest 104th Court
Miami, FL 33172-2175
Phone (305) 599-8093
Fax (305) 592-4671



BROMLEY-COOK ENGINEERING, INC.
STRUCTURAL ENGINEERING SERVICES
5440 N.W. 33RD AVENUE SUITE 100
FORT LAUDERDALE, FL 33309
WILLIAM D. COOK
LICENSE
OF
OCT 13 2015
WILLIAM D. COOK, P.E. #43904
PROFESSIONAL ENGINEER


PRODUCT:
EKU-53
IMPACT DOORS
HIGH LOAD

REVISIONS

| No. | DATE | BY | DESCRIPTION |
|---|---|---|---|
| 1 | 4/30/12 | MG | CODE UPGRADE |
| 2 | 10/16/14 | MG | ADDED ALTERNATE EXTRUSIONS |
| 3 | 04/30/15 | CD | DWG NUMBER |

DATE: 10/16/2014
SCALE: AS NOTED
DWG. BY: LA FIN
CHK. BY:

DRAWING No.:
FN-EKU53-FD

SHEET: 7 OF 13

# PROFILE COMBINATIONS

NOTE: PLEASE SEE D.P. LIMITATIONS FOR GLAZING ON SHEET 4

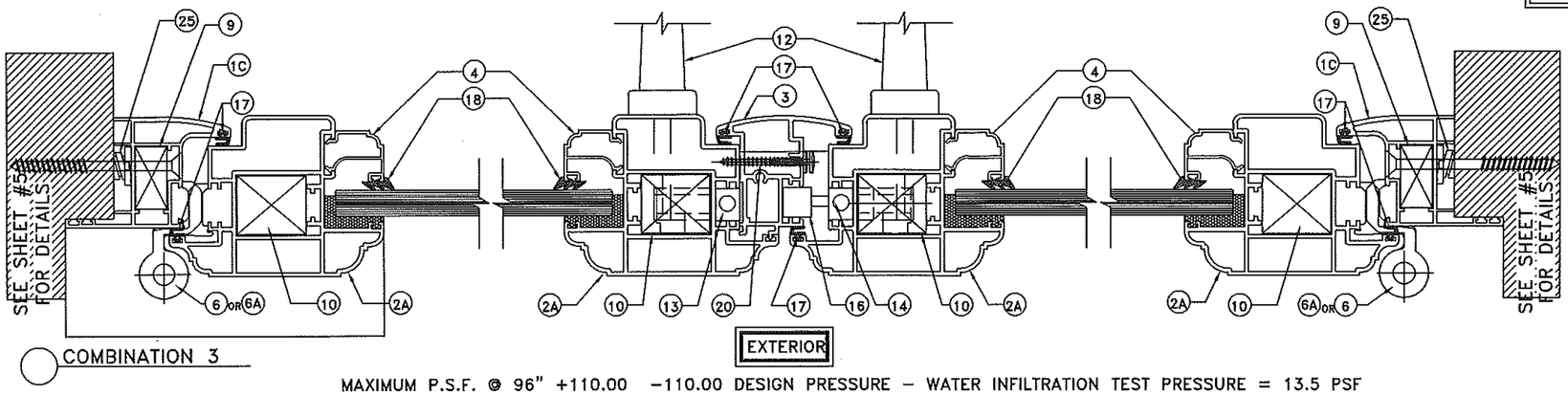


COMBINATION 3

MAXIMUM P.S.F. @ 96" +110.00 −110.00 DESIGN PRESSURE − WATER INFILTRATION TEST PRESSURE = 13.5 PSF
MAXIMUM P.S.F. @ 120" +80.00 −80.00 DESIGN PRESSURE − WATER INFILTRATION TEST PRESSURE = 12.0 PSF

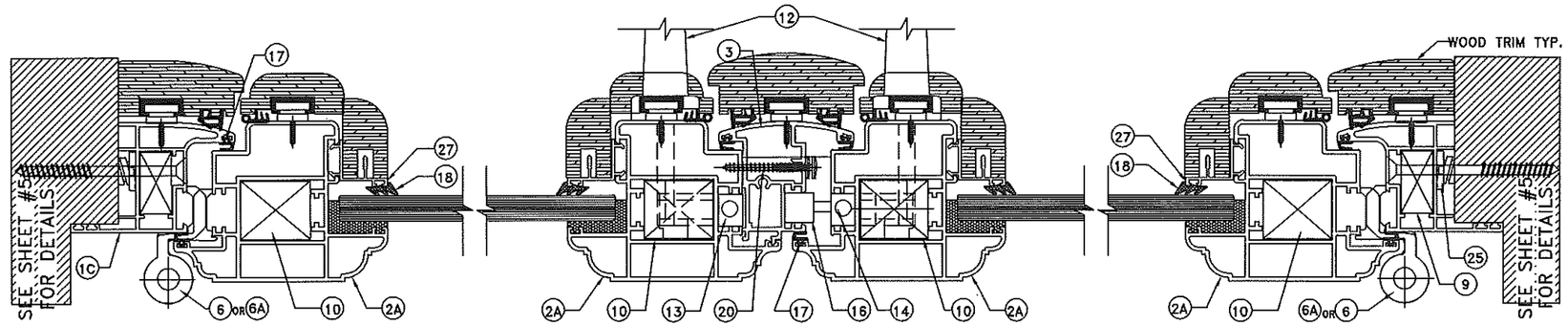


COMBINATION 3 WITH WOOD TRIM

MAXIMUM P.S.F. @ 120" +80.00 −80.00 DESIGN PRESSURE − WATER INFILTRATION TEST PRESSURE = 12.0 PSF

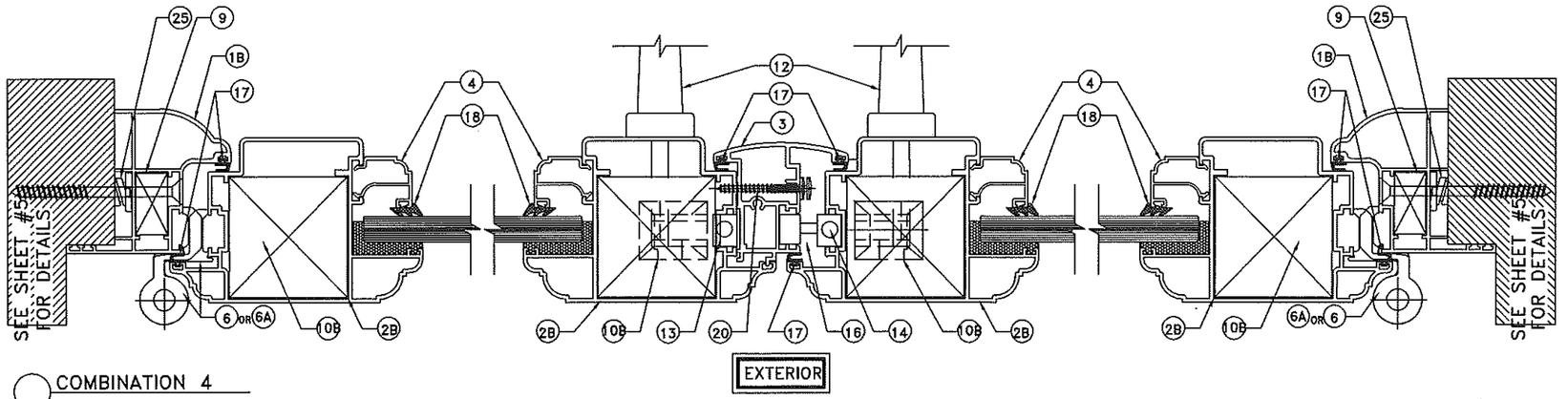


COMBINATION 4

MAXIMUM P.S.F. @ 96" +110.00 −110.00 DESIGN PRESSURE − WATER INFILTRATION TEST PRESSURE = 13.5 PSF
MAXIMUM P.S.F. @ 120" +80.00 −80.00 DESIGN PRESSURE − WATER INFILTRATION TEST PRESSURE = 12.0 PSF

PRODUCT REVISED
as complying with the Florida Building Code
Acceptance No 14-1021.07
Expiration Date Feb. 27, 2018
By Manuel Perez
Miami Dade Product Control


LA FINESTRA, L.C.
ITALIAN WINDOWS & DOORS
2790 Northwest 104th Court
Miami, FL 33172-2175
Phone (305) 599-8093
Fax (305) 592-4671

BECKLEY-COOK ENGINEERING, INC.
STRUCTURAL ENGINEERING SERVICES
5440 N.W. 33RD AVENUE, SUITE 100
FORT LAUDERDALE, FL 33309
WILLIAM D. COOK, P.E. #43904


PRODUCT:
EKU-53
IMPACT DOORS
HIGH LOAD

| No. | DATE | BY | REVISIONS DESCRIPTION |
|---|---|---|---|
| 1 | 4/30/12 | MG | CODE UPGRADE |
| 2 | 10/16/14 | MG | ADDED ALTERNATE EXTRUSIONS |
| 3 | 04/30/15 | CD | DWG NUMBER |

DATE: 10/16/2014
SCALE: AS NOTED
DWG. BY: LA FIN
CHK. BY:
DRAWING No.: FN-EKU53-FD
SHEET: 8 OF 13

# PROFILE COMBINATIONS

NOTE: PLEASE SEE D.P. LIMITATIONS FOR GLAZING ON SHEET 4

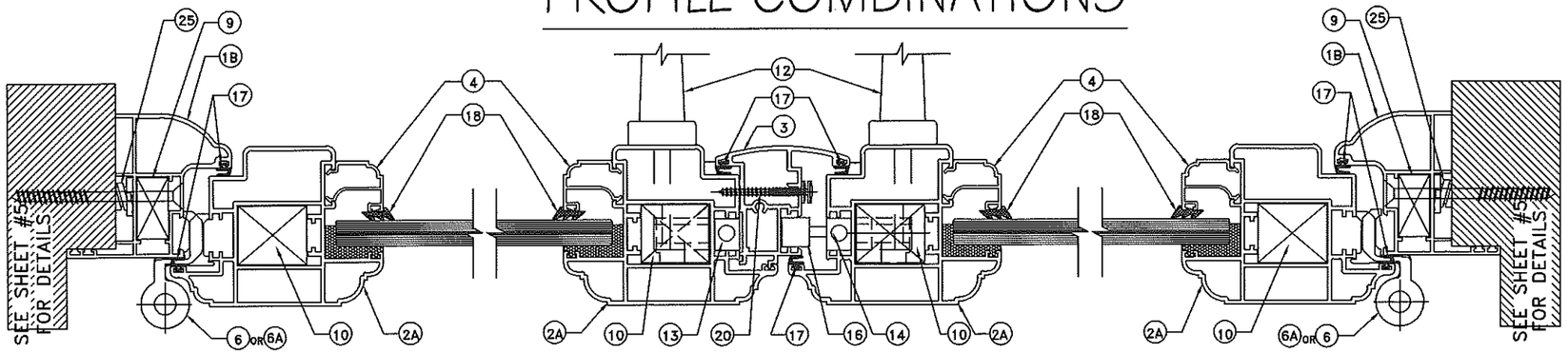


COMBINATION 5

EXTERIOR

MAXIMUM P.S.F. @ 96" +110.00 −110.00 DESIGN PRESSURE − WATER INFILTRATION TEST PRESSURE = 13.5 PSF
MAXIMUM P.S.F. @ 120" +80.00 −80.00 DESIGN PRESSURE − WATER INFILTRATION TEST PRESSURE = 12.0 PSF

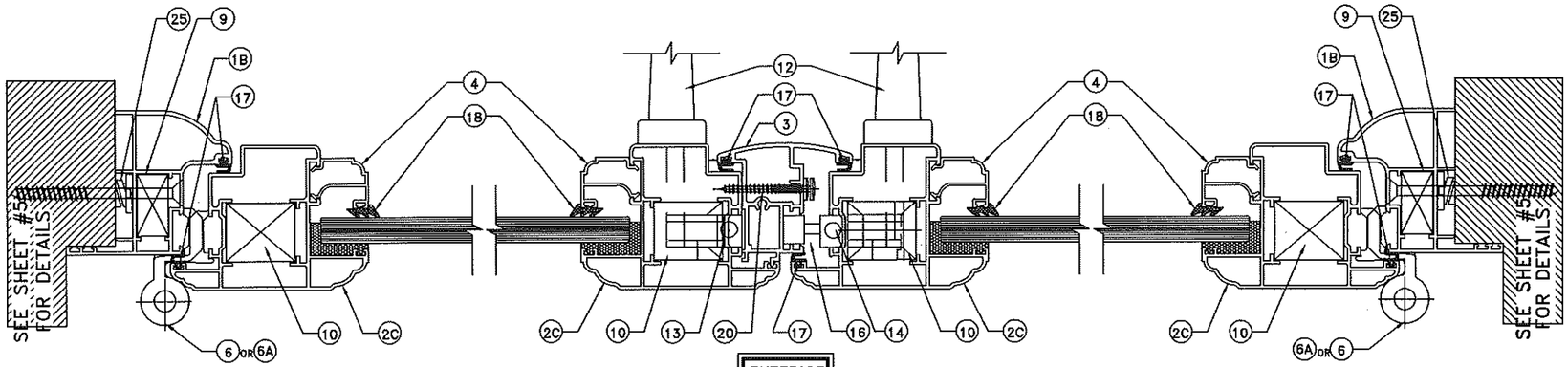


COMBINATION 6

EXTERIOR

MAXIMUM OF 96" H D.P. = +80 / −80 PSF WATER @ 12.0 PSF

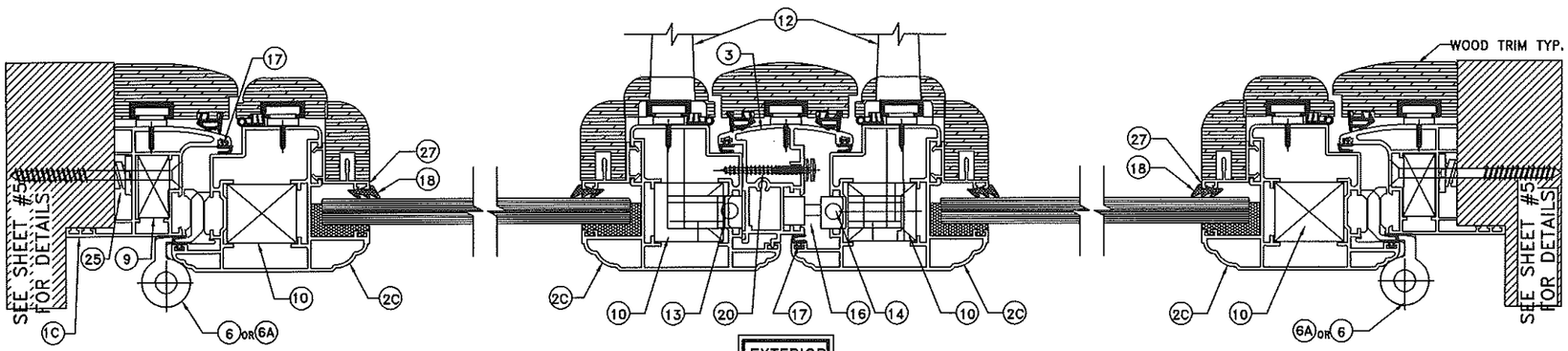


COMBINATION 7 WITH WOOD TRIM

NOTE: WOOD TRIM IS OPTIONAL

EXTERIOR

MAXIMUM OF 96" H D.P. = +80 / −80 PSF WATER @ 12.0 PSF

PRODUCT REVISED
as complying with the Florida Building Code
Acceptance No 14-1021.07
Expiration Date Feb. 27, 2018
By [signature]
Miami Dade Product Control


LA FINESTRA, L.C.
ITALIAN WINDOWS & DOORS
2790 Northwest 104th Court
Miami, FL 33172-2175
Phone (305) 599-8093
Fax (305) 592-4671



GOURLEY-COOK ENGINEERING, INC.
STRUCTURAL ENGINEERING SERVICES
5440 N.W. 33RD AVENUE, SUITE 100
FORT LAUDERDALE, FL. 33309
WILLIAM D. COOK, P.E. #43904


PRODUCT:
EKU-53
IMPACT DOORS
HIGH LOAD

| REVISIONS | | | | |
|---|---|---|---|---|
| No. | DATE | BY | DESCRIPTION | |
| 1 | 4/30/12 | MG | CODE UPGRADE | |
| 2 | 10/16/14 | MG | ADDED ALTERNATE EXTRUSIONS | |
| 3 | 04/30/15 | CD | DWG NUMBER | |

DATE: 10/16/2014
SCALE: AS NOTED
DWG. BY: LA FIN
CHK. BY:

DRAWING No.:
FN-EKU53-FD

SHEET: 9 OF 13

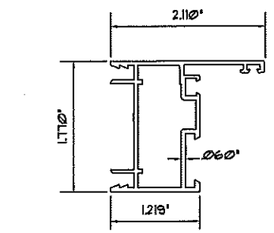


1 7011 – FRAME HEAD-JAMB-SILL
WITHOUT FLANGE

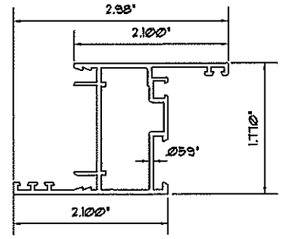


1A 7012 – FRAME HEAD-JAMB-SILL
WITH FLANGE

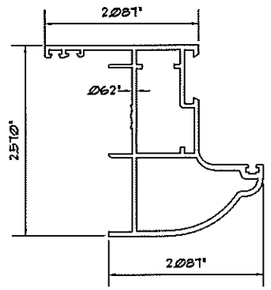


1B 17948 – FRAME HEAD

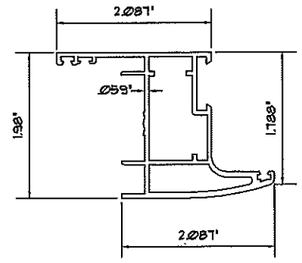


1C 17949 – FRAME HEAD

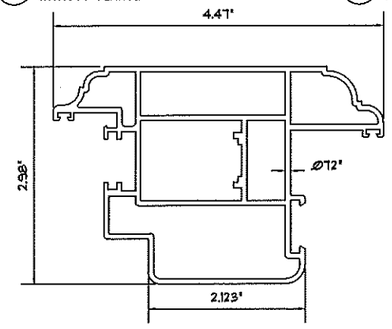


2 Z16012 – PANEL HEAD / JAMB / SILL

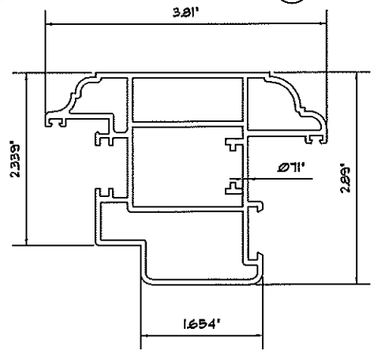


2A Z16013 – PANEL HEAD / JAMB / SILL

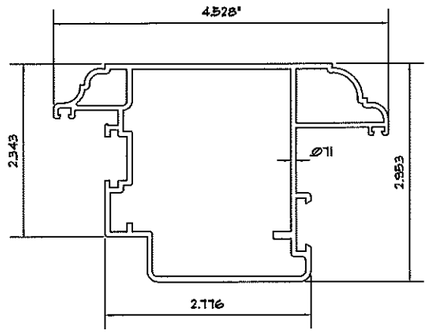


2B Z16978 – PANEL HEAD / JAMB / SILL

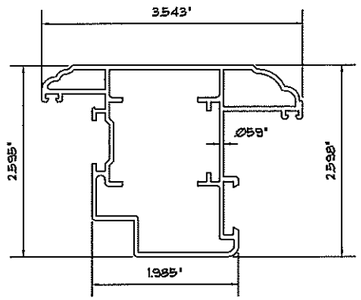


2C 18853 – PANEL HEAD / JAMB / SILL

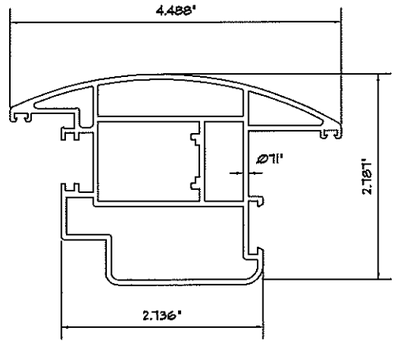


2D Z16012 – PANEL HEAD / JAMB / SILL

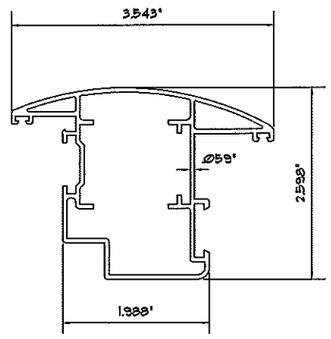


2E Z16013 – PANEL HEAD / JAMB / SILL

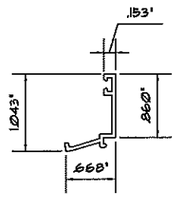


28 4293 GLAZING BEAD

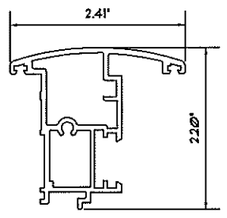


3 Z16014 – ASTRAGAL

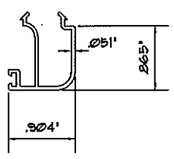


4 4195 – GLAZING BEAD

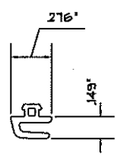


17 2666 WEATHERSTRIP GASKET

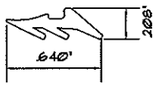


18 002/009 WEDGE GASKET

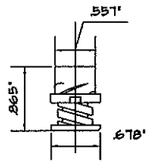


25 CD.100.BK FRAME INSERT

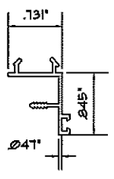


27 092109 GLAZING BEAD

PRODUCT REVISED
as complying with the Florida
Building Code
Acceptance No 14-1021.07
Expiration Date Feb 27 2018
By Manuel Perez
Miami Dade Product Control

LA FINESTRA, L.C.
ITALIAN WINDOWS & DOORS
2790 Northwest 104th Court
Miami, FL 33172-2175
Phone (305) 599-8093
Fax (305) 592-4671

BROMLEY-COOK ENGINEERING, INC.
STRUCTURAL ENGINEERING SERVICES
6440 N.W. 33RD AVENUE SUITE 100
FORT LAUDERDALE, FL 33309
WILLIAM D. COOK FL. P.E. #43808

WILLIAM D. COOK
LICENSE
STATE OF FLORIDA
PROFESSIONAL ENGINEER

PRODUCT:
EKU-53
IMPACT DOORS
HIGH LOAD

| No. | DATE | BY | DESCRIPTION |
|---|---|---|---|
| 1 | 4/30/12 | MG | CODE UPGRADE |
| 2 | 10/16/14 | MG | ADDED ALTERNATE EXTRUSIONS |
| 3 | 04/30/15 | CD | DWG NUMBER |

DATE: 10/16/2014
SCALE: AS NOTED
DWG. BY: LA FIN
CHK. BY:
DRAWING No.: FN-EKU53-FD
SHEET: 12 OF 13

# BILL OF MATERIALS

| ITEM | PART No. | QUANTITY | DESCRIPTION | MATERIAL | LOCATION | MANUFACTURER |
|---|---|---|---|---|---|---|
| 1 | 7011 | 4 | FRAME HEAD/JAMB/RESIDENTIAL SILL | AL.AL. -6060-T5 | WINDOW FRAME | PROFILATI SpA |
| 1A | 7012 | 4 | FRAME HEAD/JAMB/RESIDENTIAL SILL | AL.AL. -6060-T5 | WINDOW FRAME | PROFILATI SpA |
| 1B | 17948 | 4 | FRAME HEAD/JAMB/RESIDENTIAL SILL | AL.AL. -6063-T5 | WINDOW FRAME | PROFILATI SpA |
| 1C | 17949 | 4 | FRAME HEAD/JAMB/RESIDENTIAL SILL | AL.AL. -6063-T5 | WINDOW FRAME | PROFILATI SpA |
| 2 | Z16012 | 4 | PANEL HEAD/JAMB/SILL | AL.AL. -6060-T5 | WINDOW FRAME | PROFILATI SpA |
| 2A | Z16013 | 4 | PANEL HEAD/JAMB/SILL | AL.AL. -6063-T5 | WINDOW FRAME | PROFILATI SpA |
| 2B | Z19678 | 4 | PANEL HEAD/JAMB/SILL | AL.AL. -6063-T5 | WINDOW FRAME | PROFILATI SpA |
| 2C | Z18853 | 4 | PANEL HEAD/JAMB/SILL | AL.AL. -6063-T5 | WINDOW FRAME | PROFILATI SpA |
| 2D | Z16012 | 4 | PANEL HEAD/JAMB/SILL | AL.AL. -6063-T5 | WINDOW FRAME | PROFILATI SpA |
| 2E | Z16013 | 4 | PANEL HEAD/JAMB/SILL | AL.AL. -6063-T5 | WINDOW FRAME | PROFILATI SpA |
| 3 | Z16014 | 1 | ASTRAGAL | AL.AL. -6060-T5 | INACTIVE LEAF PANEL JAMB | PROFILATI SpA |
| 4 | 4195 | 4/VENT | GLAZING BEAD | AL.AL. -6060-T5 | PANEL PERIMETER | PROFILATI SpA |
| 5 | NOT USED | | | | | |
| 6 | A8221 | 6/VENT | 4" BUTTHINGES | AL.AL. -6060-T5 | PANEL AND FRAME JAMBS | MASTER |
| 6A | 160/12 | 6/VENT | 4" BUTTHINGES | AL.AL. -6060-T5 | PANEL AND FRAME JAMBS | CASALI |
| 7 | N/A | 2 EA. LITE OF GLASS | 1/4" X 1/2" X 3" LG. SETTING BLOCK | EXTRUDED SILICONE | @ 6" FROM ENDS | GENERIC |
| 9 | 0409 | 1 EA. CORNER | FRAME CORNER KEY | CAST ALUMINUM | FRAME CORNERS | MONTICELLI |
| 10 | 5004 | 1 EA. CORNER | PANEL CORNER KEY | CAST ALUMINUM | PANEL CORNERS | MONTICELLI |
| 10A | 001 | 1 EA. CORNER | PANEL CORNER KEY | EXT. ALUMINUM | PANEL CORNERS | PROFILATI SpA |
| 10B | 002 | 1 EA. CORNER | PANEL CORNER KEY | EXT. ALUMINUM | PANEL CORNERS | PROFILATI SpA |
| 12 | SERIES 800 | 1/VENT | OPERATING HANDLE | ALUMINUM | EACH PANEL JAMB | PASINI |
| 13 | 1025 | 2 | TRANSMISSION MOVEMENT DEVISE | ZAMA/S.S. | PANEL JAMB ASTRAGAL SIDE ONLY | GSG |
| 14 | 1286 | | 5-POINT LOCKING SYSTEM | S.S. | ACTIVE PANEL | AMESBURY |
| 15 | FB-1300-20-SS | 2 | FLUSH BOLT | S.S. | ACTIVE PANEL | SULLIVAN |
| 16 | 4031 | AS SHOWN | MUSHROOM HEAD AND KEEPERS | S.S./ALUMINUM | PANEL JAMB AT TOP & BOTTOM | GSG/LAFIN |
| 16A | CD-MPK-100-SS | | MULTIPOINT KEEPER KIT | S.S./ALUMINUM | PANEL JAMB AT TOP & BOTTOM | SULLIVAN |
| 17 | 2666 | AS REQ'D. | WEATHERSTRIP GASKET | EPDM | FRAME JAMB/ASTRAGAL/FRAME PANEL | PROFILATI SpA |
| 18 | 002/009 | AS REQ'D. | WEDGE GASKET | EPDM | PANEL GLAZING PERIM. (INTERIOR) | PROFILATI SpA |
| 19 | --- | 2/EACH | # 10 x 2 1/2" FH.SMS. (ASSEMBLY) | PLATED STEEL | FLUSHBOLT STRIKE PLATE | --- |
| 20 | --- | SEE ELEV. | # 10 x 2" FH.SMS. (ASSEMBLY) | PLATED STEEL | ASTRAGAL (SINGLE ROW) | --- |
| 22 | --- | 2 EA. CORNER | #14 X 3/4" FH. SMS. (PANEL ASS'Y) | PLATED STEEL | PANEL CORNERS | --- |
| 23 | 895/995 | CONTINUOUS | STRUCTURAL SILICONE | SILICONE | PERIMETER GLASS TO METAL | PECORA OR DOW CORNING |
| 25 | CD.100.BK | AS REQ'D. | FRAME INSERT | ALLUM/NYLON | FRAME PERIMETER (SINGLE ROW) | SULLIVAN |
| 26 | SDG.SP.316 | AS REQ'D. | STRIKE PLATE | S.S. | ALONGSIDE FRAME (WHERE LOCK MEETS) | SULLIVAN |
| 27 | 092109 | 4/VENT | GLAZING BEAD | AL.AL. -6060-T5 | PANEL PERIMETER | PROFILATI SpA |
| 28 | 4293 | 4/VENT | GLAZING BEAD | AL.AL. -6060-T5 | PANEL PERIMETER | PROFILATI SpA |
| 29 | 2167/2168 | 2 | FLUSH BOLT | ZAMA | INACTIVE PANEL | GSG |

NOT USED: (5) (8) (21) (11) (24)

PRODUCT REVISED
as complying with the Florida Building Code
Acceptance No 14-1021.07
Expiration Date Feb. 27, 2018
By Manuel Perez
Miami Dade Product Control


LA FINESTRA, L.C.
ITALIAN WINDOWS & DOORS
2790 Northwest 104th Court
Miami, FL 33172-2175
Phone (305) 599-8093
Fax (305) 592-4671



BROMLEY-COOK ENGINEERING, INC.
STRUCTURAL ENGINEERING SERVICES
3640 N.W. 43RD AVENUE SUITE 100
FORT LAUDERDALE, FL 33309


WILLIAM B. COOK FL. P.E. #39804
STATE OF FLORIDA
PROFESSIONAL ENGINEER

PRODUCT:
EKU-53
IMPACT DOORS
HIGH LOAD

REVISIONS

| No. | DATE | BY | DESCRIPTION |
|---|---|---|---|
| 1 | 4/30/12 | MG | CODE UPGRADE |
| 2 | 10/16/14 | MG | ADDED ALTERNATE EXTRUSIONS |
| 3 | 04/30/15 | CD | DWG NUMBER |

DATE: 10/16/2014
SCALE: AS NOTED
DWG. BY: LA FIN
CHK. BY:

DRAWING No.:
FN-EKU53-FD

SHEET: 13 OF 13