MIAMI-DADE COUNTY
PRODUCT CONTROL SECTION
11805 SW 26 Street, Room 208
Miami, Florida 33175-2474
T (786) 315-2590 F (786) 315-2599
www.miamidade.gov/economy

DEPARTMENT OF REGULATORY AND ECONOMIC RESOURCES (RER)
BOARD AND CODE ADMINISTRATION DIVISION

NOTICE OF ACCEPTANCE (NOA)

Construction Specialties, Inc.
49 Meeker Avenue
Cranford, NJ 07016

SCOPE:

This NOA is being issued under the applicable rules and regulations governing the use of construction materials. The documentation submitted has been reviewed and accepted by Miami-Dade County RER-Product Control Section to be used in Miami Dade County and other areas where allowed by the Authority Having Jurisdiction (AHJ).

This NOA shall not be valid after the expiration date stated below. The Miami-Dade County Product Control Section (In Miami Dade County) and/or the AHJ (in areas other than Miami Dade County) reserve the right to have this product or material tested for quality assurance purposes. If this product or material fails to perform in the accepted manner, the manufacturer will incur the expense of such testing and the AHJ may immediately revoke, modify, or suspend the use of such product or material within their jurisdiction. RER reserves the right to revoke this acceptance, if it is determined by Miami-Dade County Product Control Section that this product or material fails to meet the requirements of the applicable building code.

This product is approved as described herein, and has been designed to comply with the Florida Building Code, including the High Velocity Hurricane Zone.

DESCRIPTION: Model DC-5704 Aluminum Louver

APPROVAL DOCUMENT: Drawing No. **RD-1075**, titled "DC-5704 Layout Drawings", sheets 1 through 7 of 7, dated 10/02/2008, with revision dated 03/26/2013, prepared by Construction Specialty, Inc., signed and sealed by L. David Rice, P.E., bearing the Miami-Dade County Product Control revision stamp with the Notice of Acceptance number and expiration date by the Miami-Dade County Product Control Section.

MISSILE IMPACT RATING: Large and Small Missile Impact Resistant.

LABELING: Each unit shall bear a permanent label with the manufacturer's name or logo, Del Rio, TX, model/series, and following statement: "Miami-Dade County Product Control Approved", unless otherwise noted herein.

RENEWAL of this NOA shall be considered after a renewal application has been filed and there has been no change in the applicable building code negatively affecting the performance of this product.

TERMINATION of this NOA will occur after the expiration date or if there has been a revision or change in the materials, use, and/or manufacture of the product or process. Misuse of this NOA as an endorsement of any product, for sales, advertising or any other purposes shall automatically terminate this NOA. Failure to comply with any section of this NOA shall be cause for termination and removal of NOA.

ADVERTISEMENT: The NOA number preceded by the words Miami-Dade County, Florida, and followed by the expiration date may be displayed in advertising literature. If any portion of the NOA is displayed, then it shall be done in its entirety.

INSPECTION: A copy of this entire NOA shall be provided to the user by the manufacturer or its distributors and shall be available for inspection at the job site at the request of the Building Official.

This NOA **revises NOA # 14-0311.06** and consists of this page 1 and evidence page E-1, as well as approval document mentioned above.

The submitted documentation was reviewed by **Carlos M. Utrera, P.E.**

MIAMI-DADE COUNTY APPROVED

01/21/2015

NOA No. 14-1021.13
Expiration Date: June 03, 2019
Approval Date: January 29, 2015

NOTICE OF ACCEPTANCE: EVIDENCE SUBMITTED

A. DRAWINGS ***"Submitted under NOA # 14-0311.06"***

1. Drawing No. **RD-1075**, titled "DC-5704 Layout Drawings", sheets 1 through 7 of 7, dated 10/02/2008, with revision dated 03/26/2013, prepared by Construction Specialty, Inc., signed and sealed by L. David Rice, P.E.

B. TESTS ***"Submitted under NOA # 09-0310.06"***

1. Test report on Uniform Static Air Pressure Test per FBC, TAS 202-94, Large Missile Impact Test per FBC, TAS 201-94 and Cyclic Wind Pressure Loading per FBC, TAS 203-94 of four Series/Model DC 5704 Aluminum Louver Assemblies, prepared by Architectural Testing, Inc., Test Report No. **88285.01-109-18,** dated 02/25/2009, signed and sealed by Michael D. Stremmel, P.E.

C. CALCULATIONS ***"Submitted under NOA # 12-1231.02"***

1. Frame bending, stress and deflection calculations, prepared by Rice Engineering, dated 12/13/2012, signed and sealed by L. David Rice, P.E.

"Submitted under NOA # 09-0310.06"

2. Anchoring, stress and deflection calculations, prepared by Rice Engineering, dated 02/26/2009, signed and sealed by L. David Rice, P.E.

D. QUALITY ASSURANCE

1. Miami-Dade Department of Regulatory and Economic Resources (RER)

E. MATERIAL CERTIFICATIONS

1. None.

F. STATEMENTS

1. Statement letter of code conformance to 5th edition (2014) FBC issued by Rice Engineering, dated 09/26/2014, signed and sealed by L. David Rice, P.E.

"Submitted under NOA # 14-0311.06"

2. Statement letter of code conformance to 2010 FBC issued by Rice Engineering, dated 02/26/2014, signed and sealed by L. David Rice, P.E.

"Submitted under NOA # 09-0310.06"

3. Letter of no financial interest issued by Rice Engineering, dated 02/26/2009, signed and sealed by L. David Rice, P.E.

01/21/2015

Carlos M. Utrera, P.E.
Product Control Examiner
NOA No. 14-1021.13
Expiration Date: June 03, 2019
Approval Date: January 29, 2015

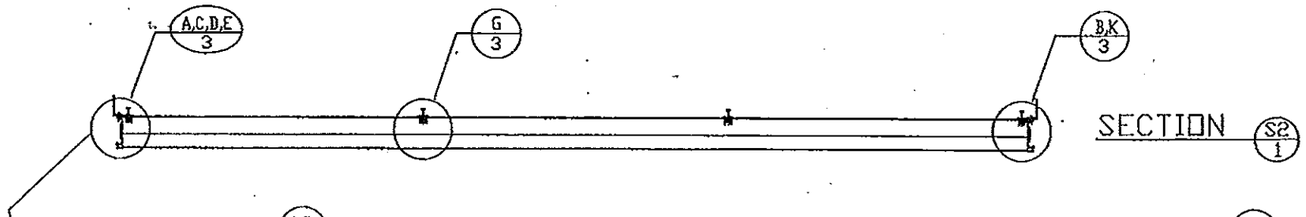

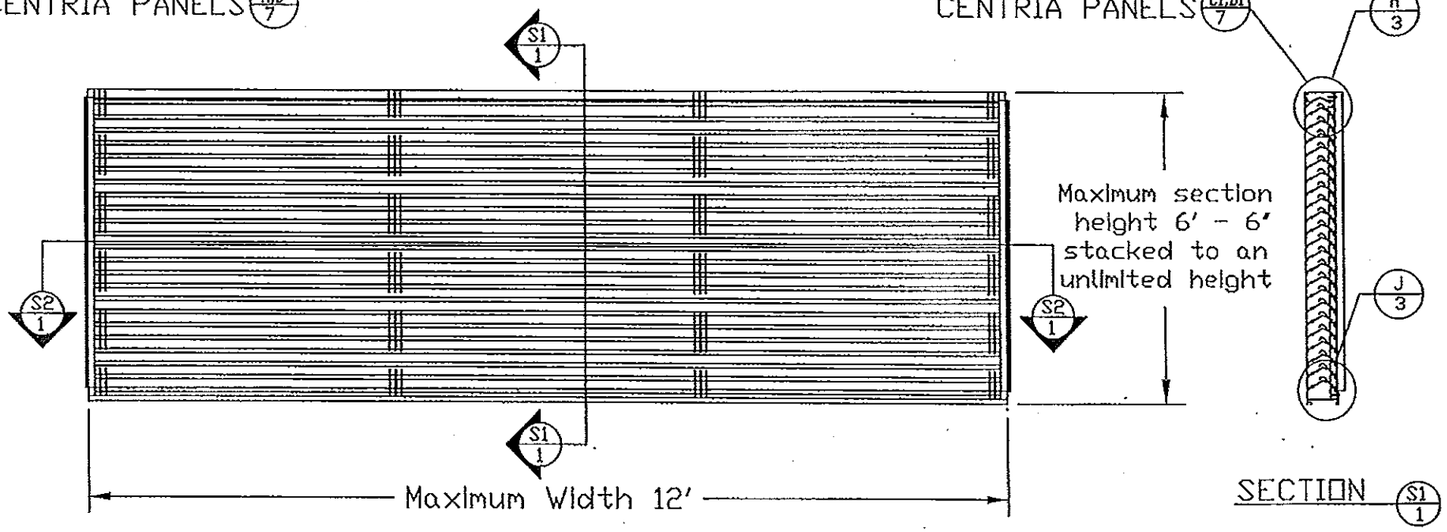

SPECIMIN 1
130 PSF

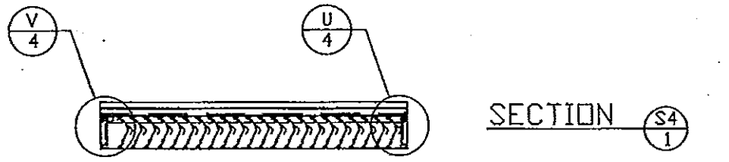

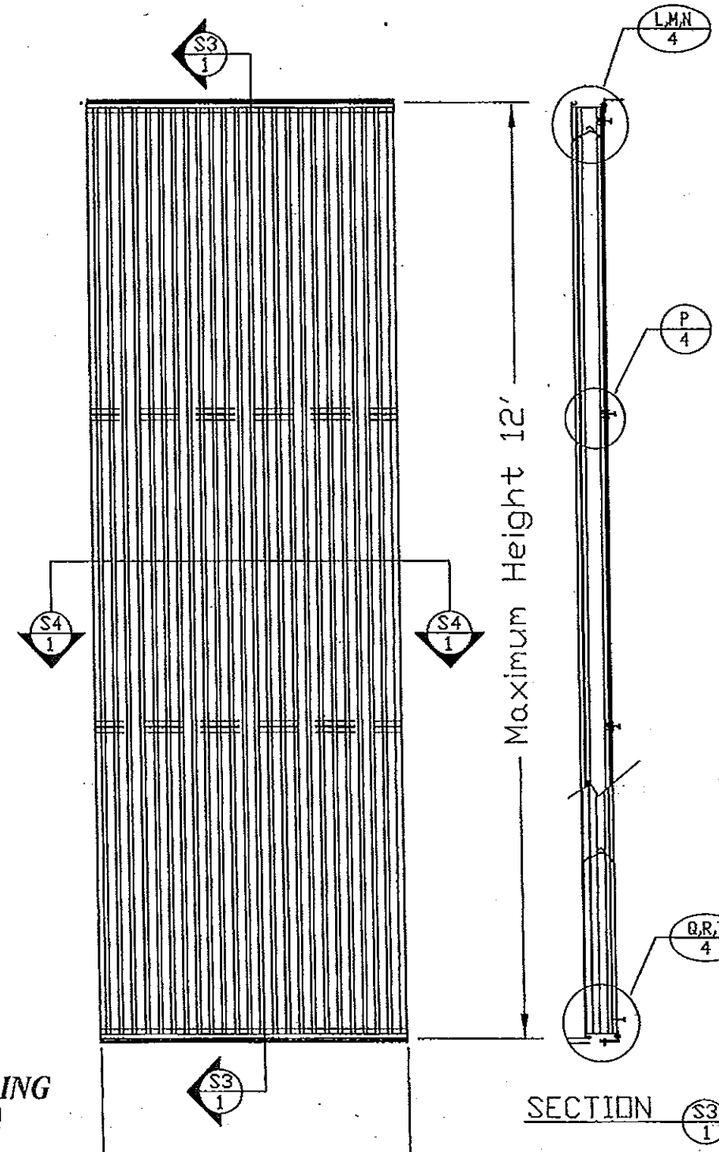

SPECIMIN 2
130 PSF

1) It shall be the responsibilityof the Structural Engineer of Record to verify the capacity of the structure to support the loads imposed by the louvers.
2) These louvers have been designed according to the Florida Building Code and the Aluminum Design Manual. Thet are tested in accordance with Dade County protocals TAS 201, TAS 202 and TAS 203,
3) All fasteners shall be stainless steel or plated steel.
4) All concrete substrate shall be a minimum of 2000 psi .
5) Panel widths and heights are limited as shown in elevations and details.
6) The louver is to be installed in a location where the room behind the louver is designed to drain water penetrating into the room and the room will house waterproof or water resistant equipment, components or supplies.
7) Jamb clip spacing may not be altered. Each clip and fastener used must be detailed on the drawing and verified on the NOA.
8) Separation of unpainted aluminum and dissimilar materials per Florida Building Code Section 2003.8.4.2 to be maintained by the installer
10) This louver system has been tested, analyzed and approved for design pressures not to exceed 150 PSF.
11) See sheet 6 of 7 for blade span table

PRODUCT REVISED
as complying with the Florida Building Code
Acceptance No 14-1021.13
Expiration Date 06/03/2019
By _____
Miami Dade Product Control

PRODUCT RENEWED
as complying with the Florida Building Code
Acceptance No 14-0311.06
Expiration Date 06/03/2019
By _____
Miami Dade Product Control

L. DAVID RICE
LICENSE
No. 50923
STATE OF FLORIDA
PROFESSIONAL ENGINEER

RICE
ENGINEERING
105 School Creek Trail
Luxemburg, WI 54217
Phone: 920.845 1042
Fax: 920.845 1048
www.rice-inc.com

Florida Firm No: F-000005061
Certificate of Authorization: #9090
L. David Rice
Registration No: 50923

REVISION: 3-26-13
DATE: 10-02-08
SHEET: 1 OF 7
DRW NO : RD-1075
PROJECT: DC-5704
TITLE: LAYOUT DRAWINGS
SCALE: 1/2" = 1'-0"
DRW BY: R. GEIST

Construction Specialties™
49 MEEKER AVENUE, CRANFORD, NEW JERSEY
PHONE: 1-800-631-7379 / FAX: 908-272-5844

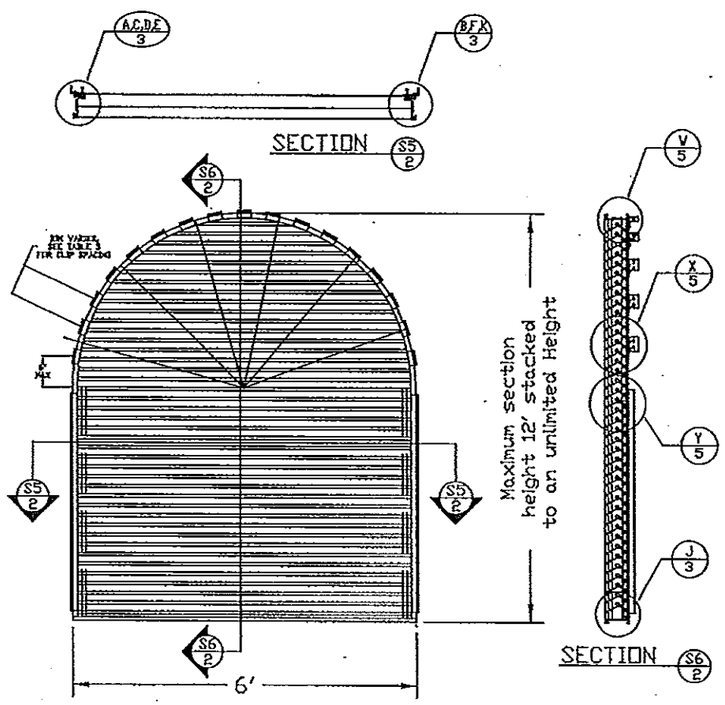

SPECIMIN 3
150 PSF

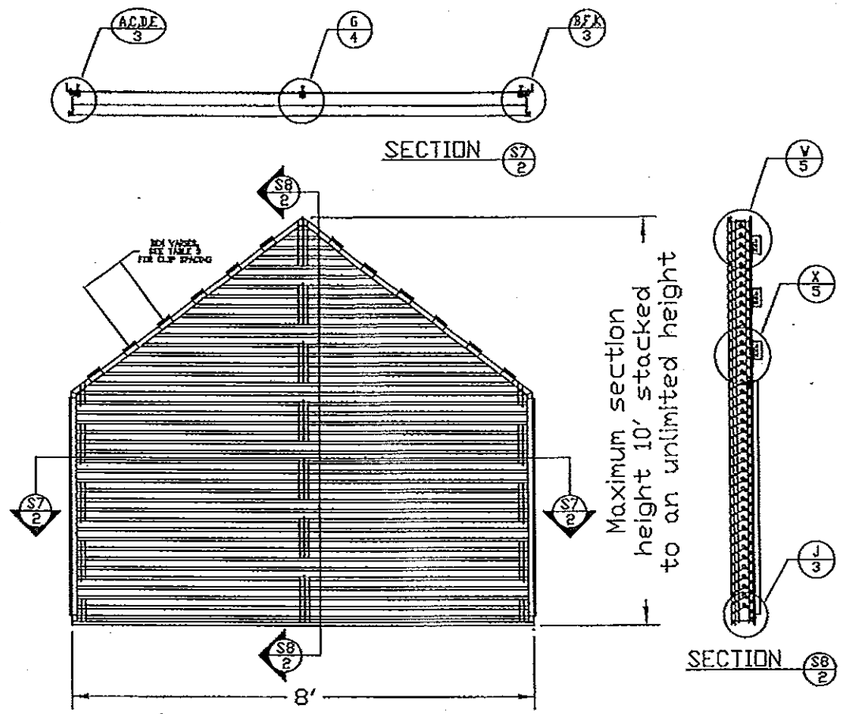

SPECIMIN 4
150 PSF

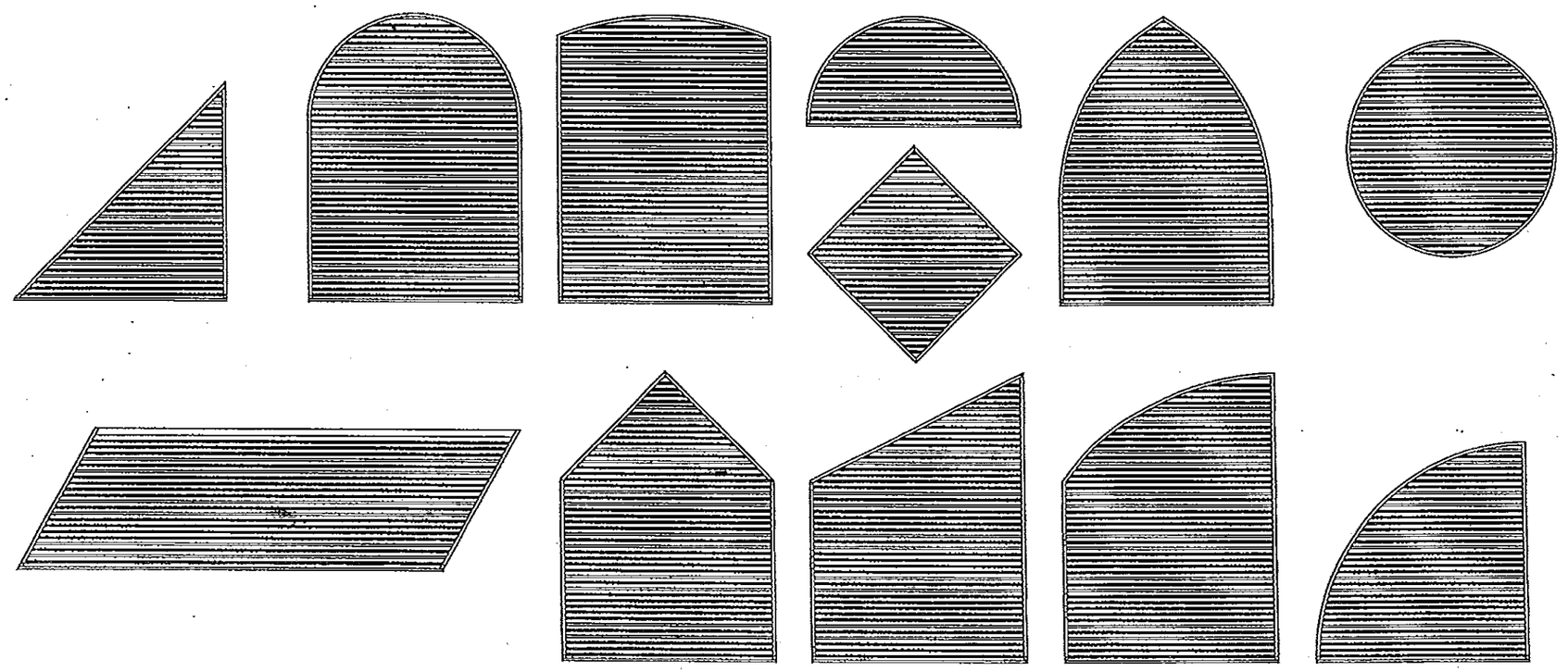

PRODUCT REVISED
as complying with the Florida
Building Code
Acceptance No 14-1021.13
Expiration Date 06/03/2019
By
Miami Dade Product Control

PRODUCT RENEWED
as complying with the Florida
Building Code
Acceptance No 14-0311.06
Expiration Date 06/03/2019
By
Miami Dade Product Control

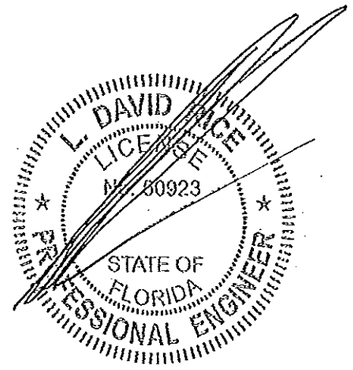

REVISION: 3-26-13	
DATE: 10-02-08	
SHEET: 2 OF 7	
DRW NO : RD-1075	
PROJECT: DC-5704	
TITLE: LAYOUT DRAWINGS	
SCALE: 3/8" = 1'-0"	
DRW BY: R. GEIST	

Construction Specialties™
49 MEEKER AVENUE, CRANFORD, NEW JERSEY
PHONE: 1-800-631-7379 / FAX: 908-272-5844

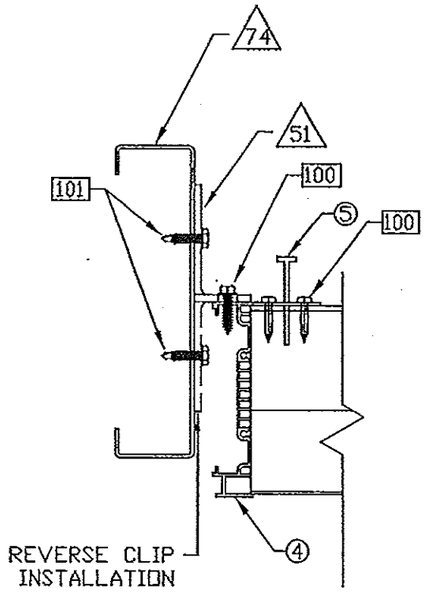

16 Ga MIN GALVANIZED STRUCTURAL STEEL STUD
Detail A/3
SCALE: NTS
SP-1,3 & 4

PRODUCT REVISED
as complying with the Florida Building Code
Acceptance No 14-1021.13
Expiration Date 06/03/2019
By
Miami Dade Product Control

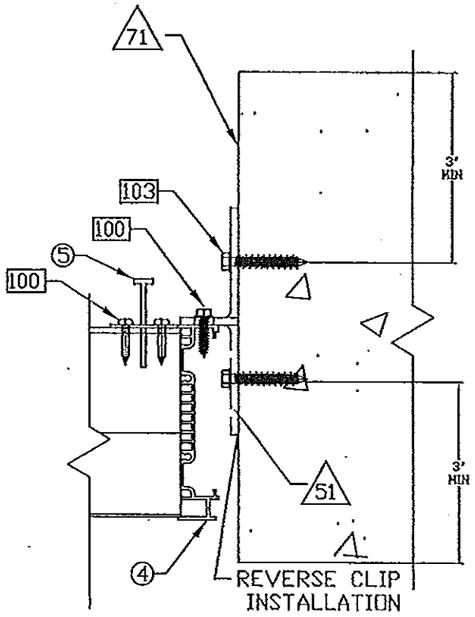

2000 LB MIN CONCRETE
Detail B/3
SCALE: NTS
SP-1,3 & 4

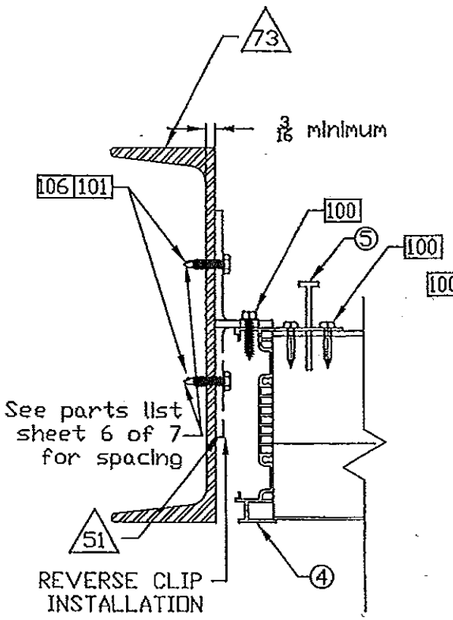

1/4" MINIMUM STRUCTURAL STEEL
Detail C/3
SCALE: NTS
SP-1,3 & 4

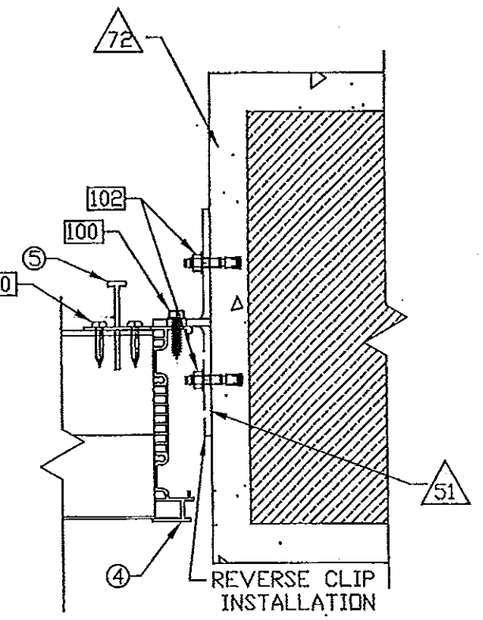

CONCRETE FILLED CMU
Detail D/3
SCALE: NTS
SP-1,3 & 4

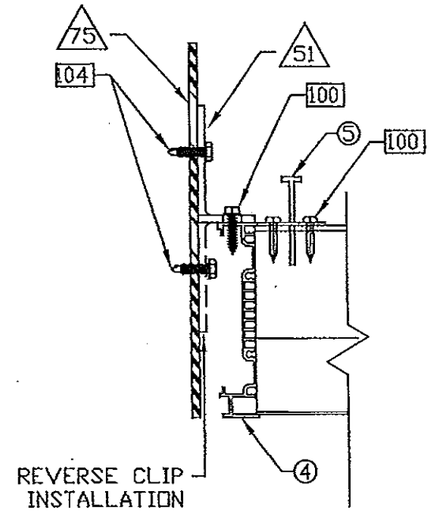

1/8" MINIMUM ALUMINUM PLATE
Detail E/3
SCALE: NTS
SP-1,3 & 4

PRODUCT RENEWED
as complying with the Florida Building Code
Acceptance No 14-0311.06
Expiration Date 06/03/2019
By
Miami Dade Product Control

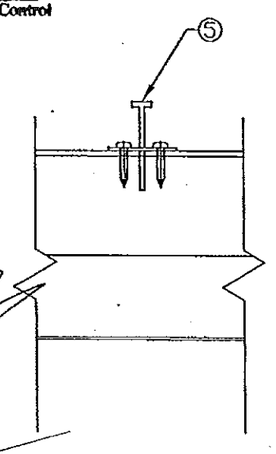

Detail G/3
SCALE: NTS
SP-1 & 4

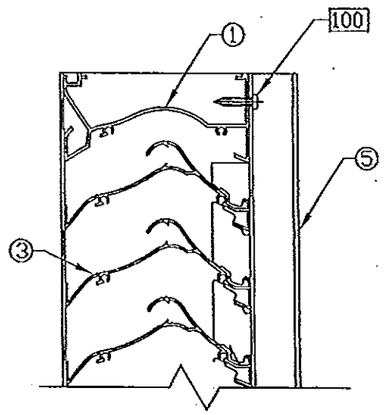

Detail H/3
SCALE: NTS
SP-1

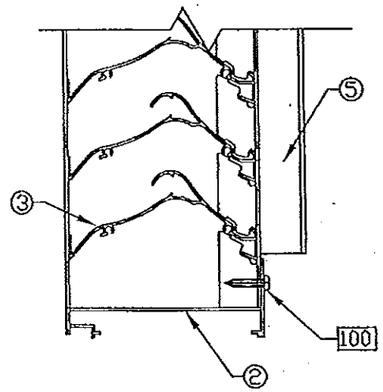

Detail J/3
SCALE: NTS
SP-1,3 &4

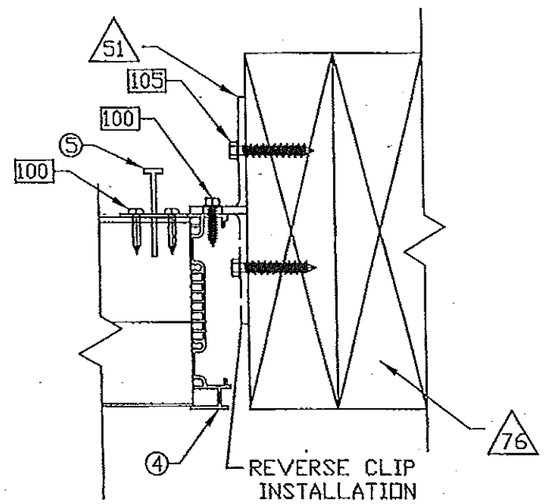

WOOD
G=0.42 MIN.
Detail K/3
SCALE: NTS
SP-1,3 &4

L. DAVID RICE
LICENSE
No. 50[illegible]3
STATE OF FLORIDA
PROFESSIONAL ENGINEER

PROJECT: DC-5704
TITLE: LAYOUT DRAWINGS
SCALE: 3"=1'-0"
DRW BY: R. GEIST
REVISION: 3-26-13
DATE: 10-02-08
SHEET: 3 OF 7
DRW NO: RD-1075

Construction Specialties™
49 MEEKER AVENUE, CRANFORD, NEW JERSEY
PHONE: 1-800-631-7379 / FAX: 908-272-5844

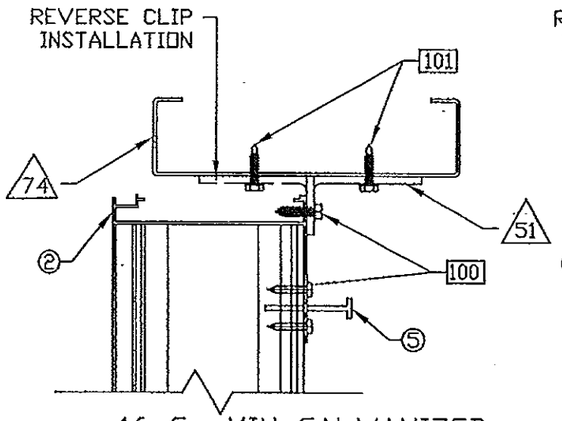

16 Ga MIN GALVANIZED STRUCTURAL STEEL STUD

Detail L/4
SCALE: NTS
SP-2

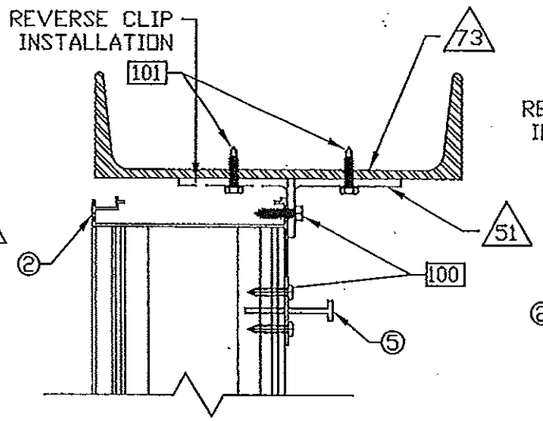

3/16" MINIMUM STRUCTURAL STEEL

Detail M/4
SCALE: NTS
SP-2

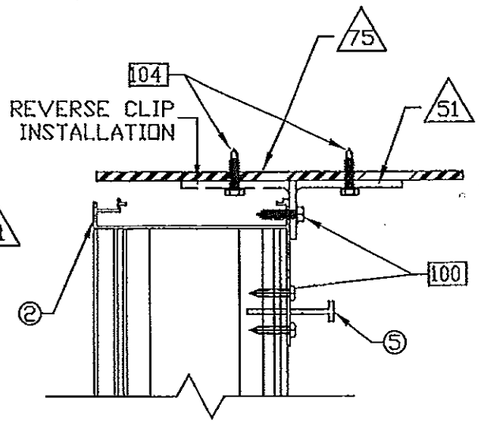

1/8" MINIMUM ALUMINUM PLATE

Detail N/4
SCALE: NTS
SP-2

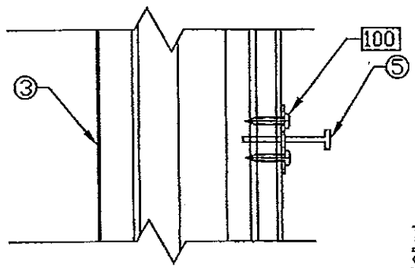

Detail P/4
SCALE: NTS
SP-2

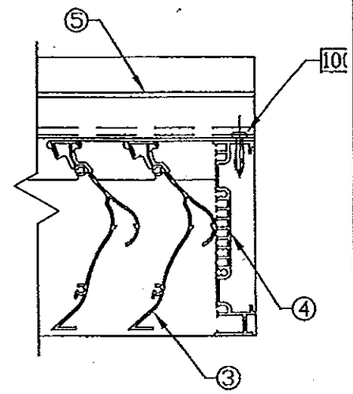

Detail U/4
SCALE: NTS
SP-2

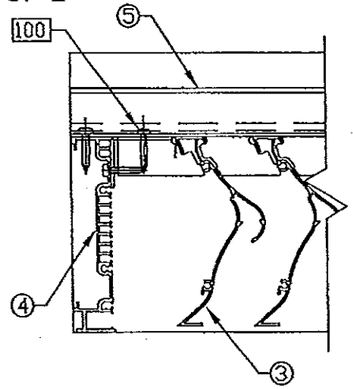

Detail V/4
SCALE: NTS
SP-2

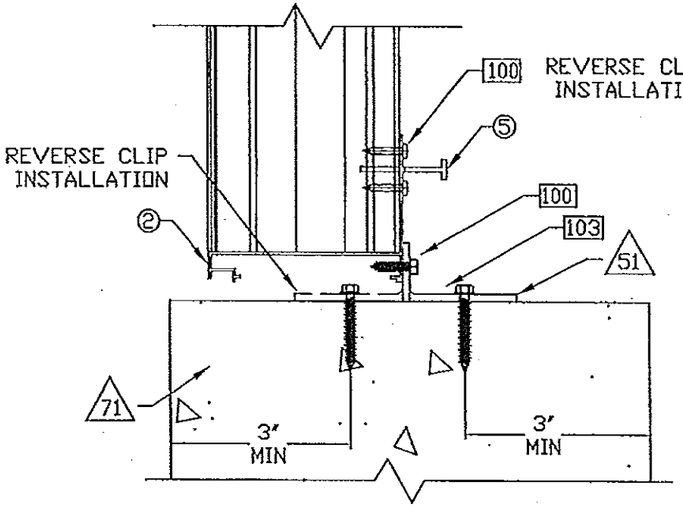

2000 LB MIN CONCRETE

Detail Q/4
SCALE: NTS
SP-2

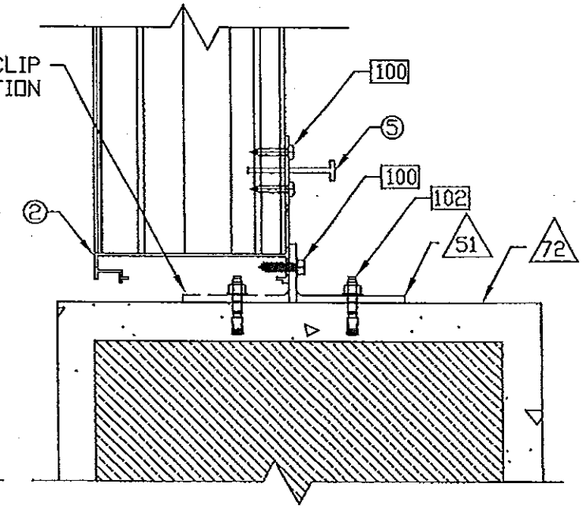

CONCRETE FILLED CMU

Detail R/4
SCALE: NTS
SP-2

PRODUCT RENEWED
as complying with the Florida Building Code
Acceptance No 14-0311.06
Expiration Date 06/03/2019
By
Miami Dade Product Control

PRODUCT REVISED
as complying with the Florida Building Code
Acceptance No 14-1021.13
Expiration Date 06/03/2019
By
Miami Dade Product Control

L. DAVID RICH
LICENSED
No. 50923
STATE OF FLORIDA
PROFESSIONAL ENGINEER

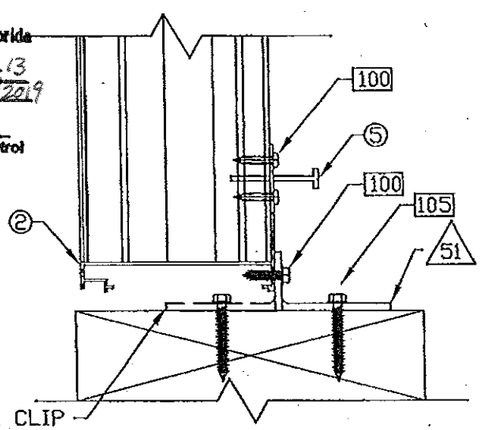

WOOD G=0,42 MIN.

Detail T/4
SCALE: NTS
SP-2

PROJECT: DC-5704
TITLE: LAYOUT DRAWINGS
SCALE: 3"=1'-0"
DRW BY: R. GEIST
REVISION: 3-26-13
DATE: 10-02-08
SHEET: 4 OF 7
DRW NO: RD-1075

Construction Specialties™
49 MEEKER AVENUE, CRANFORD, NEW JERSEY
PHONE: 1-800-631-7379 / FAX: 908-272-5844

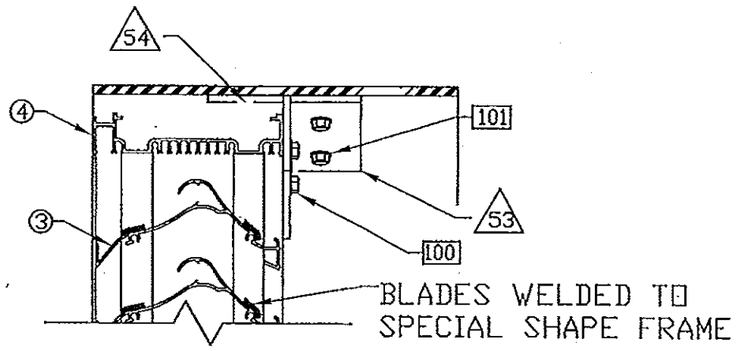

Detail W/5
SCALE: NTS
SP-3 & 4

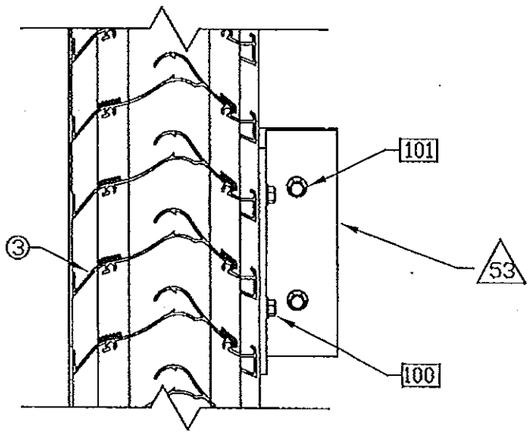

Detail X/5
SCALE: NTS
SP-3 & 4

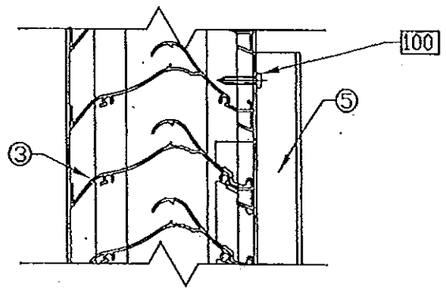

Detail Y/5
SCALE: NTS
SP-3 & 4

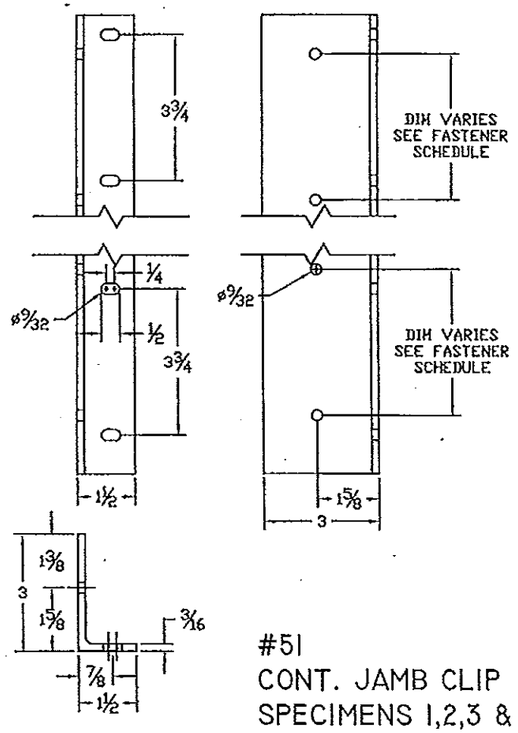

#51
CONT. JAMB CLIP
SPECIMENS 1,2,3 & 4

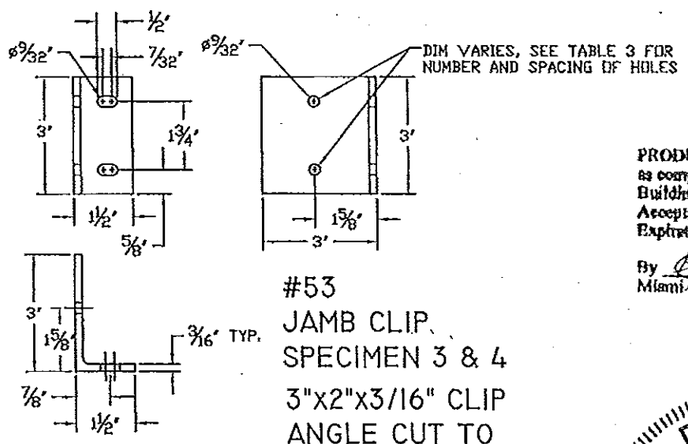

#53
JAMB CLIP,
SPECIMEN 3 & 4
3"X2"X3/16" CLIP
ANGLE CUT TO
3"XI-1/2"X3" LG

PRODUCT REVISED
as complying with the Florida
Building Code
Acceptance No 14-1021.13
Expiration Date 06/03/2019
By
Miami-Dade Product Control

PRODUCT RENEWED
as complying with the Florida
Building Code
Acceptance No 14-0311.06
Expiration Date 06/03/2019
By
Miami-Dade Product Control

L. DAVID RICE
LICENSED
No. 50923
STATE OF
FLORIDA
PROFESSIONAL ENGINEER

REVISION: 3-26-13
DATE: 10-02-08
SHEET: 5 OF 7
DRW NO : RD-1075
PROJECT: DC-5704
TITLE: LAYOUT DRAWINGS
SCALE: 3"=1'-0"
DRW BY: R. GEIST

Construction Specialties™
49 MEEKER AVENUE, CRANFORD, NEW JERSEY
PHONE 1-800-631-7379 / FAX: 908-272-5844

1 - Head

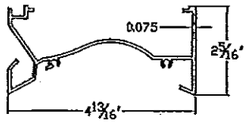

6 - CENTRIA Head

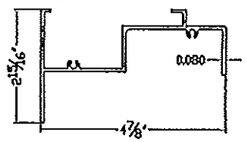

10 CENTRIA Head Extension 2" panel

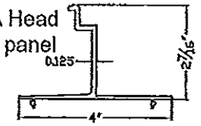

11 CENTRIA Head Extension 3" panel

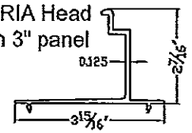

2 - Sill

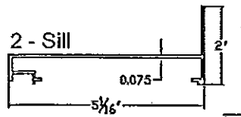

7 - CENTRIA 2" Panel Sill

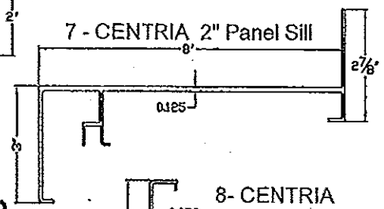

3 - Blade

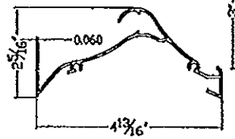

12 - 2" CENTRIA Panel Jamb Extension

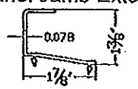

8- CENTRIA Jamb

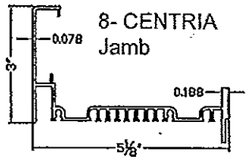

4 - Jamb

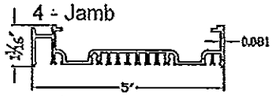

13 - 3" CENTRIA Panel Jamb Extension

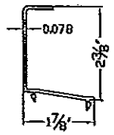

9 - CENTRIA 3" Panel Sill

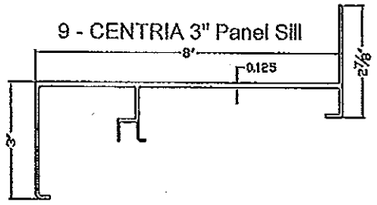

5 - Blade Brace

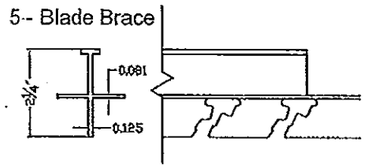

LOUVER BLADE SPAN	
Louver Width (feet & Inches)	Allowable Wind Load PSF
12' - 0"	130
11' - 6"	133
11' - 0"	135
10' - 6"	138
10' - 0"	140
9' - 6"	143
9' - 0"	145
8' - 0" and shorter	150

L. DAVID RICE LICENSED No. 50923 STATE OF FLORIDA PROFESSIONAL ENGINEER

TABLE 1 - PARTS LIST

ITEM	PART	DESCRIPTION
1	HEAD	6063-T6 ALUMINUM 0.075 THK
2	SILL	6063-T6 ALUMINUM 0.075 THK
3	BLADE	6063-T6 ALUMINUM 0.060 THK
4	JAMB	6063-T6 ALUMINUM 0.081 THK
5	BLADE BRACE	6063-T6 ALUMINUM 0.125 THK
6	CENTRIA HEAD	6063-T6 ALUMINUM 0.080 THK
7	CENTRIA 2" SILL	6063-T6 ALUMINUM 0.125 THK
8	CENTRIA JAMB	6063-T6 ALUMINUM 0.078 THK
9	CENTRIA 3" SILL	6063-T6 ALUMINUM 0.125 THK
10	CENTRIA 2" HEAD EXTENSION	6063-T6 ALUMINUM 0.125 THK AT BUILDING CONNECTION
11	CENTRIA 3" HEAD EXTENSION	6063-T6 ALUMINUM 0.125 THK AT BUILDING CONNECTION
12	CENTRIA 2" JAMB EXTENSION	6063-T6 ALUMINUM 0.078 THK
13	CENTRIA 3" JAMB EXTENSION	6063-T6 ALUMINUM 0.078 THK
51	JAMB ANGLE	1 1/2"x3"x3/16" CONT. ALUM ANGLE - 6061 T6
53	JAMB CLIP ANGLE	2"x3"x3/16"x3"LG ALUM. JAMB CLIP ANGLE - 6061 T6
54	BRACE CLIP ANGLE	2"x2"x3/16"x3"LG ALUM. JAMB CLIP ANGLE - 6061 T6
71	CONCRETE	2000# CONCRETE
72	CMU	GROUT FILLED CONCRETE MASONRY UNIT
73	STRUCTURAL STEEL 3/16" MIN	3/16" THK MIN.
74	STEEL STUD	16 GA MINIMUM
75	ALUMINUM PLATE	1/8" MINIMUM
76	WOOD	G = 0.42 MINIMUM

PRODUCT RENEWED as complying with the Florida Building Code Acceptance No 14031.06 Expiration Date 06/03/2019 By Miami Dade Product Control

PRODUCT REVISED as complying with the Florida Building Code Acceptance No 14021.13 Expiration Date 06/03/2019 By Miami Dade Product Control

REVISION: 3-26-13
DATE: 10-02-08
SHEET: 6 OF 7
DRW NO : RD-1075
PROJECT: DC-5704
TITLE: LAYOUT DRAWINGS
SCALE: HALF
DRW BY: R. GEIST

Continious Clip Building Attachment Fastener Schedule (Table 2)

Part Num.	Fastener Description	Substrate	Max Spacing	Min. Edge Dist.	Min. embed.
100	1/4" SS or coated carbon steel self drilling or self tapping Sheet metal	0.081 Aluminum Mullion	3-3/4"	3/8"	NA
101	1/4" SS or coated carbon steel self drilling or self tapping Sheet metal Screw	.060 Cold Formed Steel	4-3/4"	1/2"	NA
101	1/4" coated carbon steel self drilling or self tapping sheet metal screw	3/16" Structural Steel	7-1/2"	1/2"	NA
102	1/4" Dia Hilti KB III	Grout Filled CMU	6"	2"	4"
103	Carbon steel or stainless steel 1/4" Tapcon or equiv.	2000 lb Concrete	6"	3"	1-3/4"
104	1/4 SS or coated carbon steel self drilling or self tapping screws	Aluminum (1/8" Min)	4"	1/2"	NA
105	1/4" SS or plated carbon steel wood screw	Wood	3"	2-1/2"	2-1/2"
106	1/4" SS or plated carbon steel wood screw	3/16" Structural Steel	See Sheet 7	1/4"	NA

Special Shape Louver Fastener Schedule - Clips 1-1/2" x 3" x 3" long (Table 3)

Part Num.	Fastener Description	Substrate	Num. Screws	Screw Spacing	Min. Edge Dist.	Min. embed.	Clip Spacing
100	1/4" SS or coated carbon steel self drilling or self tapping sheet metal screw	0.081 Aluminum Mullion	2	1 3/4"	NA	3/8"	NA
101	1/4" SS or coated carbon steel self Drilling or self tapping sheet metal Screw	.060 Cold Formed Steel	2	1 3/4"	NA	1/2"	9"
101	1/4" coated carbon steel self drilling or self tapping sheet metal screw	3/16" Structural Steel	1	NA	NA	1/2"	9"
102	1/4" Dia Hilti KB III	Grout Filled CMU	1	NA	2"	4"	9"
103	Carbon steel or stainless steel 1/4" Tapcon or equiv.	2000 lb Concrete	1	NA	3"	1-3/4"	6"
104	1/4" SS or coated carbon steel self drilling or self	Aluminum (1/8" Min)	2	1 3/4"	1/2"	NA	6
105	1/4" SS or plated carbon steel wood screw	Wood	2	1 3/4"	2-1/2"	2-1/2"	6"

Construction Specialties
49 MEEKER AVENUE, CRANFORD, NEW JERSEY
PHONE: 1-800-631-7379 / FAX: 908-272-5844

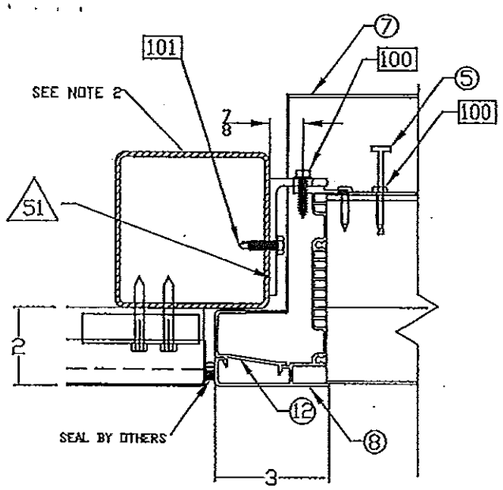

JAMB AND 2" PANEL INTERFACE

Detail A/7
SCALE: NTS
SP-1

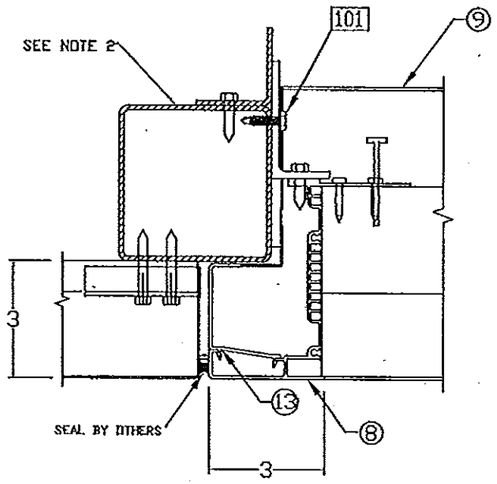

JAMB AND 3" PANEL INTERFACE

Detail B/7
SCALE: NTS
SP-1

Note 1 - Alternate frame components for DCH 5704 louvers to allow louver integration with CENTRIA horizontal panels in the Centria Formawall Dimension and Graphix systems. The details on page 7 apply to Specimen 1 only

Note 2 - Structural Supports may be 3/16" structural steel or Minimum 16 gauge galvanized cold formed steel

PRODUCT RENEWED
as complying with the Florida Building Code
Acceptance No 14-0311.06
Expiration Date 06/03/2019
By
Miami Dade Product Control

PRODUCT REVISED
as complying with the Florida Building Code
Acceptance No 14-1021.13
Expiration Date 06/03/2019
By
Miami Dade Product Control

L. DAVID RICE
LICENSE
No. 50923
STATE OF FLORIDA
PROFESSIONAL ENGINEER

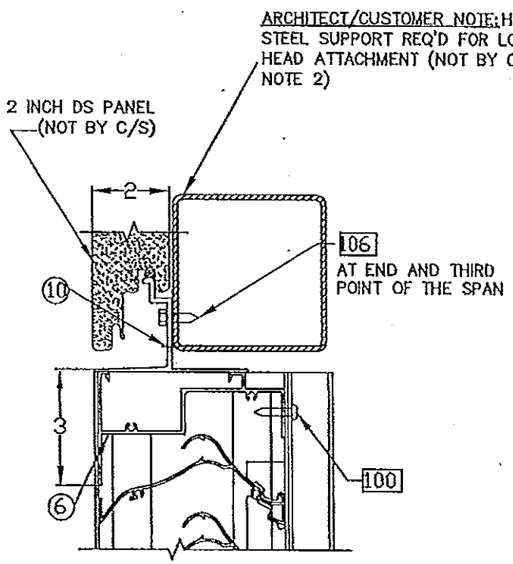

HEAD AND 2" PANEL INTERFACE

Detail C1/7
SCALE: NTS
SP-1

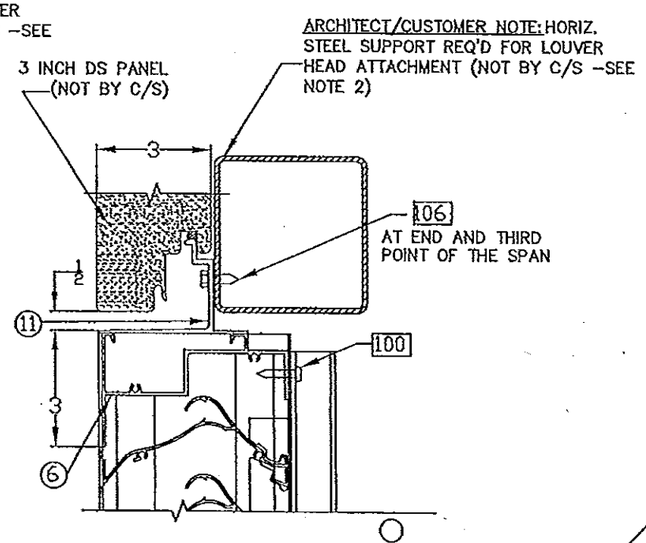

HEAD AND 3" PANEL INTERFACE

Detail D1/7
SCALE: NTS
SP-1

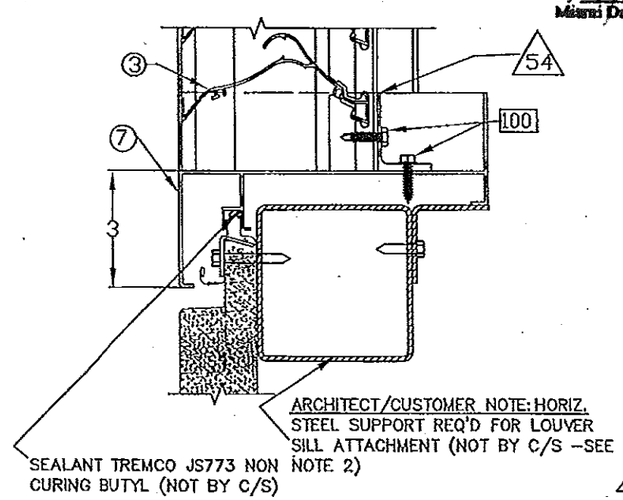

SILL AND 2" PANEL INTERFACE

Detail E1/7
SCALE: NTS
SP-1

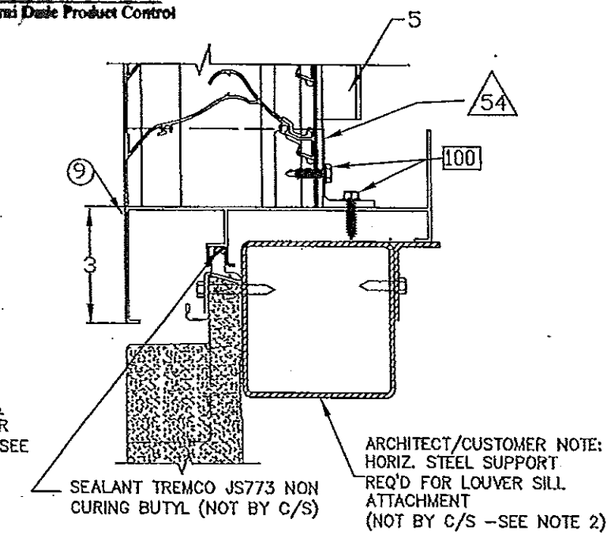

SILL AND 3" PANEL INTERFACE

Detail F1/7
SCALE: NTS
SP-1

REVISION: 3-26-13
DATE: 10-02-08
SHEET: 7 OF 7
DRW NO : RD-1075

PROJECT: DC-5704
TITLE: LAYOUT DRAWINGS
SCALE: 3"=1'-0"
DRW BY: R. GEIST

Construction Specialties™
49 MEEKER AVENUE, CRANFORD, NEW JERSEY
PHONE: 1-800-631-7379 / FAX: 908-272-5844