MIAMI-DADE COUNTY
PRODUCT CONTROL SECTION
11805 SW 26 Street, Room 208
Miami, Florida 33175-2474
T (786) 315-2590 F (786) 315-2599
www.miamidade.gov/economy

DEPARTMENT OF REGULATORY AND ECONOMIC RESOURCES (RER)
BOARD AND CODE ADMINISTRATION DIVISION

NOTICE OF ACCEPTANCE (NOA)

Plycem USA LLC
1149 ABTco Road
North Wilkesboro, NC 28697

SCOPE:

This NOA is being issued under the applicable rules and regulations governing the use of construction materials. The documentation submitted has been reviewed and accepted by Miami-Dade County RER-Product Control Section to be used in Miami Dade County and other areas where allowed by the Authority Having Jurisdiction (AHJ).

This NOA shall not be valid after the expiration date stated below. The Miami-Dade County Product Control Section (In Miami Dade County) and/or the AHJ (in areas other than Miami Dade County) reserve the right to have this product or material tested for quality assurance purposes. If this product or material fails to perform in the accepted manner, the manufacturer will incur the expense of such testing and the AHJ may immediately revoke, modify, or suspend the use of such product or material within their jurisdiction. RER reserves the right to revoke this acceptance, if it is determined by Miami-Dade County Product Control Section that this product or material fails to meet the requirements of the applicable building code.

This product is approved as described herein, and has been designed to comply with the Florida Building Code, including the High Velocity Hurricane Zone.

DESCRIPTION: Allura Fiber Cement Siding and Soffit

APPROVAL DOCUMENT: Drawing No. **10SBC00164B0000-E** through **10SBC00164B0007-E**, titled: Fiber Cement Panel/Plank, Fiber Cement Random Square Shapes and Fiber Cement Soffit Installation Details Steel/Wood Stud Construction", sheets 1 through 8 of 8, prepared by Plycem USA LLC, dated 01/24/2002, with the last revision E dated 01/19/2015, signed and sealed by Jose D. Mitrani, P.E., bearing the Miami-Dade County Product Control revision stamp with the Notice of Acceptance number and expiration date by the Miami-Dade County Product Control Section.

MISSILE IMPACT RATING: Large and Small Missile Impact Resistant

LABELING: A permanent label with the manufacturer's name or logo, North Wilkesboro, NC, model/series and the following statements: "ASTM C 1186 Type A compliant" and "Miami-Dade County Product Control Approved" is to be located on each siding unit and per FBC 1715.9.2 and 1715.9.3 on soffit units.

RENEWAL of this NOA shall be considered after a renewal application has been filed and there has been no change in the applicable building code negatively affecting the performance of this product.

TERMINATION of this NOA will occur after the expiration date or if there has been a revision or change in the materials, use, and/or manufacture of the product or process. Misuse of this NOA as an endorsement of any product, for sales, advertising or any other purposes shall automatically terminate this NOA. Failure to comply with any section of this NOA shall be cause for termination and removal of NOA.

ADVERTISEMENT: The NOA number preceded by the words Miami-Dade County, Florida, and followed by the expiration date may be displayed in advertising literature. If any portion of the NOA is displayed, then it shall be done in its entirety.

INSPECTION: A copy of this entire NOA shall be provided to the user by the manufacturer or its distributors and shall be available for inspection at the job site at the request of the Building Official.

This NOA **revises NOA # 13-0212.02** and consists of this page 1 and evidence page E-1, as well as approval document mentioned above.

The submitted documentation was reviewed by **Carlos M. Utrera, P.E.**

MIAMI-DADE COUNTY APPROVED

04/08/15

NOA No. 14-1022.03
Expiration Date: April 24, 2018
Approval Date: April 16, 2015

NOTICE OF ACCEPTANCE: EVIDENCE SUBMITTED

A. DRAWINGS

1. Drawing No. **10SBC00164B0000-E** through **10SBC00164B0007-E**, titled: Fiber Cement Panel/Plank, Fiber Cement Random Square Shapes and Fiber Cement Soffit Installation Details Steel/Wood Stud Construction", sheets 1 through 8 of 8, prepared by Plycem USA LLC, dated 01/24/2002, with the last revision E dated 01/19/2015, signed and sealed by Jose D. Mitrani, P.E.

B. TESTS *"Submitted under NOA # 02-0503.01"*

	Report	Test	Date	Signature
1.	AT-01-42883.01	ASTM C1185	03/11/03	A. N. Reeves, P.E.
2.	RT-11168-98	ASTM C1185	02/27/02	B. I. Ogawa, P.E.
3.	HETI 01-1058	TAS 202	08/28/01	H. M. Medina, P.E.
4.	HETI 01-1021	TAS 202	06/06/01	H. M. Medina, P.E.
5.	HETI 01-1000	TAS 202	06/01/01	H. M. Medina, P.E
6.	HETI 01-1036	TAS 203	06/22/01	H. M. Medina, P.E.
7.	HETI 01-1072	TAS 202	09/06/01	H. M. Medina, P.E.
8.	HETI 01-1035	TAS 202	06/22/01	H. M. Medina, P.E.
9.	HETI 01-1023	TAS 202	06/01/01	H. M. Medina, P.E.
10.	HETI 01-1060	TAS 202	08/28/01	H. M. Medina, P.E.
11.	HETI 01-1000	TAS 202	06/01/01	H. M. Medina, P.E.

C. CALCULATIONS *"Submitted under NOA # 08-0213.05"*

1. Anchor verification calculations and structural analysis, complying with FBC-2007, dated 04/11/2008, prepared, signed and sealed by Jose D. Mitrani, P.E.
2. Fasteners calculations prepared by Jose D. Mitrani, sheets 1 through 19, signed and sealed by Jose D. Mitrani, P.E. ***"Submitted under NOA # 02-0503.01"***

D. QUALITY ASSURANCE

1. Miami-Dade Department of Regulatory and Economic Resources (RER)

E. MATERIAL CERTIFICATIONS

1. None.

F. STATEMENTS

1. Bill of sale dated 02/01/2014.
2. Statement letter of code conformance to 2007 and 2010 FBC (including ASTM C1186, Type A) issued by Jose D. Mitrani, P.E., dated 12/11/2011, signed and sealed by Jose D. Mitrani, P.E. ***"Submitted under NOA # 11-1014.08"***
3. No financial interest letter issued by Jose D. Mitrani, P.E., dated 04/11/2008, signed and sealed by Jose D. Mitrani, P.E. ***"Submitted under NOA # 08-0213.05"***

04/08/15

Carlos M. Utrera, P.E.
Product Control Examiner
NOA No. 14-1022.03
Expiration Date: April 24, 2018
Approval Date: April 16, 2015

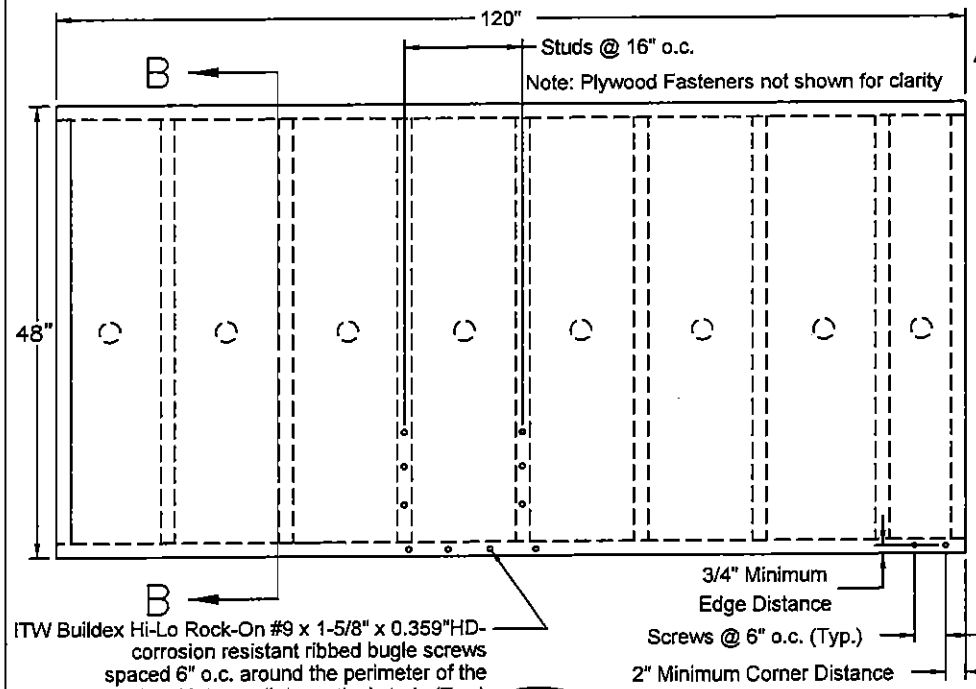

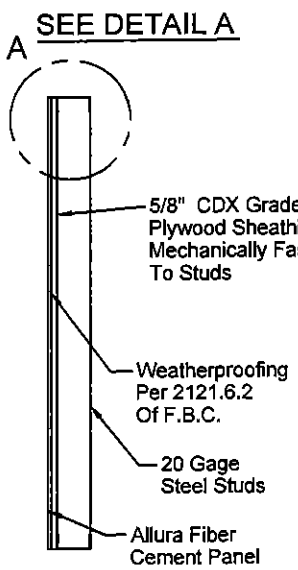

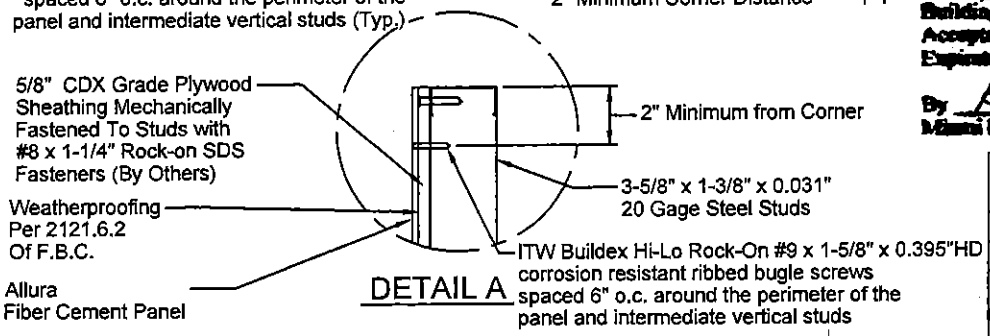

PRODUCT REVISED
as complying with the Florida Building Code
Acceptance No 14-1022.03
Expiration Date 04/29/2018
By [illegible]
Miami Dade Product Control

Product Description

Allura panel material is a non-asbestos fiber Cement product tested in accordance with ASTM C-1185 and meeting the requirements of the Florida Building Code

Panel Dimensions

Width	Length	Thickness
48"	8',9',10'	5/16"

Design Pressure Rating

Installation on:	Design Pressure:
Steel Studs	-115 PSF

Impact Resistant - Panels installed over 5/8" plywood sheathing

Installation Notes

1. All installation shall be done in conformance with this Notice of Acceptance, the manufacturer's installation recommendations and the requirements of the Florida Building Code.
2. Metal studs on to which Allura Fiber Cement Panels will be installed shall be designed by a Registered Professional Engineer or Licensed Architect per the F.B.C. and the requirements of this N.O.A.
3. Panels are to be installed vertically, avoiding horizontal joints, over 5/8" CDX grade APA rated plywood supported by 20 gage x 3-5/8" x 1-3/8" steel studs spaced a maximum of 16" o.c.
4. Allura fiber cement panels shall be fastened with ITW Buildex Hi-Lo Rock-On #9 x 1-5/8" x 0.395" HD corrosion resistant ribbed bugle screws.
5. Fasteners shall be placed 6" o.c. around the perimeter of the panel and intermediate vertical studs, driven through the plywood sheathing into the studs. All joints shall be over studs and screws shall have a minimum edge distance of 3/4" and minimum clearance of 2" from the corners.

General Notes

1. Wall receiving Fiber Cement Panels shall be checked for structural adequacy (By Others)
2. Walls shall be weather proofed with the equivalent of 15 pound felt as described in section 2121.6.2 of the F.B.C.

Jose' D. Mitrani P.E.
10643 S.W. 129 Place
Miami, Florida 33186
Fla. Reg. # PE 19643

Steve Phelps Allura Plant Engineer
1149 ABTco Road North Wilkesboro, NC 28659

02/19/15

REVISION	DATE	BY	DESCRIPTION
C	08/29/02	RA	BCCO 7/31/2002 REVIEW
D	04/01/08	NJS	Rev. 2007 FBC
E	01/19/15	SP	Name Change from CertainTeed to Allura

allura Plycem USA LLC.
15055 Woodham Drive
Houston, Texas 77073

TITLE: FIBER CEMENT PANEL INSTALLATION DETAILS
STEEL STUD CONSTRUCTION

DATE: 01/24/02
DRAWN BY: B. SHAW
SHEET: 1 OF: 8
DRAWING NUMBER: 10SBC00164B0000-E
SCALE: NONE

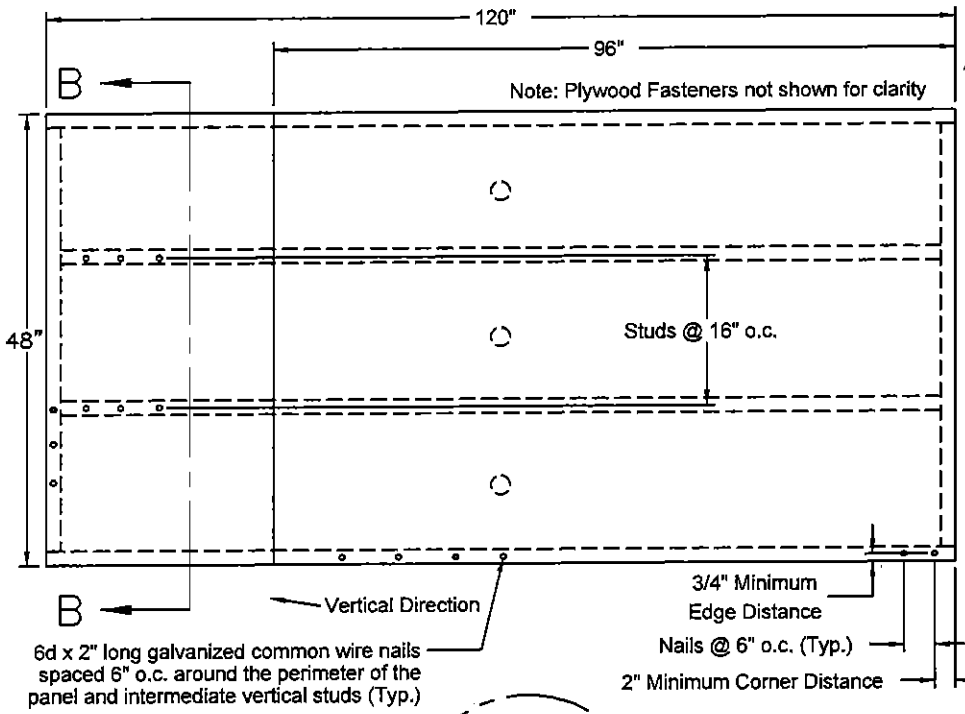

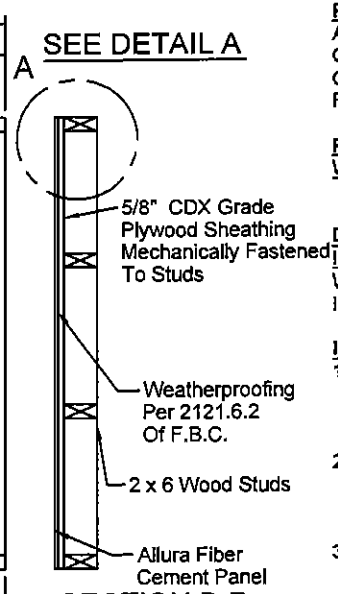

PRODUCT REVISED
as complying with the Florida Building Code
Acceptance No 14-1022.03
Expiration Date 04/24/2018
By
Miami-Dade Product Control

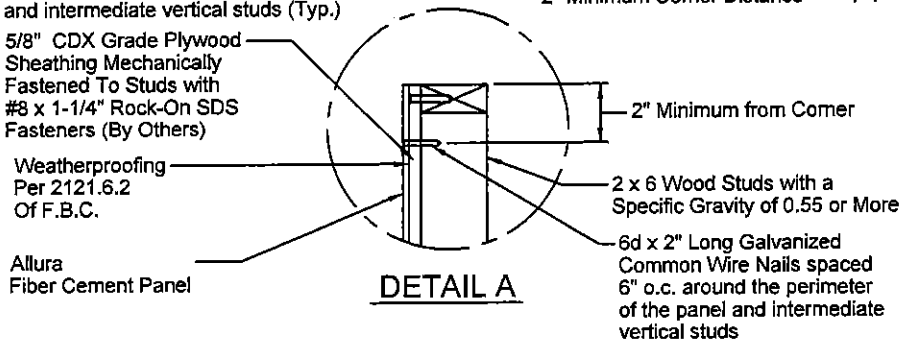

Product Description

Allura panel material is a non-asbestos Fiber Cement product tested in accordance with ASTM C-1185 and meeting the requirements of the Florida Building Code

Panel Dimensions

Width	Length	Thickness
48"	8',9',10'	5/16"

Design Pressure Rating

Installation on:	Design Pressure:
Wood Studs	-76 PSF

Impact Resistant - Panels installed over 5/8" plywood sheathing

Installation Notes

1. All installation shall be done in conformance with this Notice of Acceptance, the manufacturer's installation recommendations and the requirements of the Florida Building Code.
2. Wood studs on to which Allura Fiber Cement Panels will be installed shall be designed by a Registered Professional Engineer or Licensed Architect per the F.B.C. and the requirements of this N.O.A.
3. Panels are to be installed vertically, avoiding horizontal joints, over 5/8" CDX grade APA rated plywood supported by 2 x 6 wood studs with a specific gravity of 0.55 or more spaced a maximum of 16" o.c.
4. Allura Fiber Cement Panels shall be fastened with 6d x 2" long galvanized common wire nails.
5. Fasteners shall be placed 6" o.c. around the perimeter of the panel and intermediate vertical studs, driven through the plywood sheathing into the studs. All joints shall be over studs and nails shall have a minimum edge distance of 3/4" and minimum clearance of 2" from the corners.

General Notes

1. Wall receiving Fiber Cement Panels shall be checked for structural adequacy (By Others)
2. Walls shall be weather proofed with the equivalent of 15 pound felt as described in section 2121.6.2 of the F.B.C.

Jose' D. Mitrani P.E.
10642 S.W. 129 Place
Miami, Florida 33186
Fla. Reg. # PE 18843

REVISION	DATE	BY	DESCRIPTION
C	08/29/02	RA	BCCO 7/31/2002 REVIEW
D	04/01/08	NJS	Rev. 2007 FBC
E	2/11/15	SP	Name change from CertainTeed to Allura

Steve Phelps Allura Plant Engineer
1149 ABTco Road North Wilkesboro NC 28659

02/19/15

allura
Fiberon USA LLC.
15055 Woodham Drive
Houston, Texas 77073

TITLE: FIBER CEMENT PANEL INSTALLATION DETAILS WOOD STUD CONSTRUCTION

DATE: 01/24/02
DRAWN BY: B. SHAW
SHEET: 2 OF: 8
DRAWING NUMBER: 10SBC00164B0001-E
SCALE: NONE

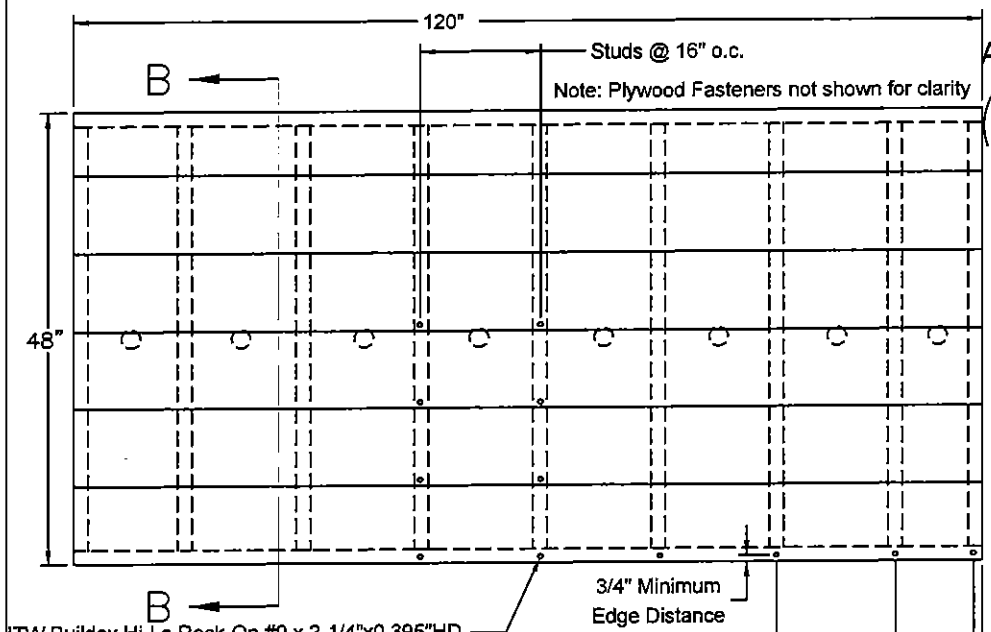

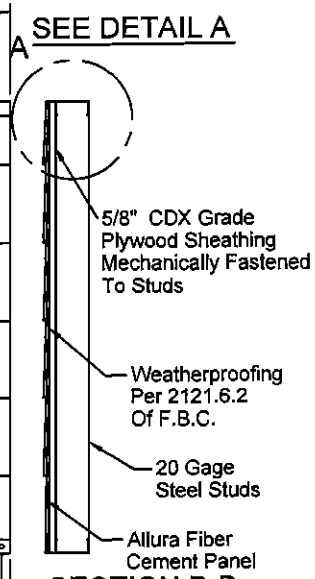

PRODUCT REVISED
as complying with the Florida Building Code
Acceptance No 14-1022.03
Expiration Date 04/24/2018
By
Miami-Dade Product Control

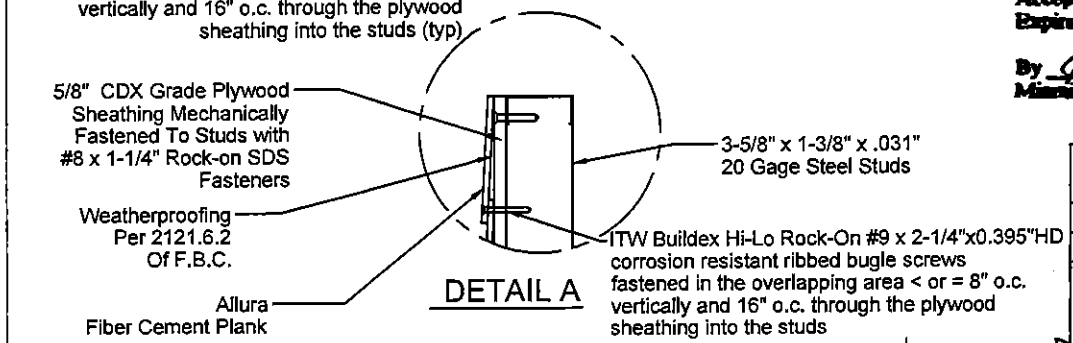

General Notes

1. Wall receiving Fiber Cement Planks shall be checked for structural adequacy (By Others)
2. Walls shall be weather proofed with the equivalent of 15 pound felt as described in section 2121.6.2 of the F.B.C.

Product Description

Allura plank material is a non-asbestos fiber Cement product tested in accordance with ASTM C-1185 and meeting the requirements of the Florida Building Code.

Plank Dimensions

Width	Length	Thickness
≤ 9-1/2"	12'	5/16"

Design Pressure Rating

Installation:	Design Pressure:
Steel Studs	-92 PSF

Impact Resistant - Planks installed over 5/8" plywood sheathing

Installation Notes

1. All installation shall be done in conformance with this Notice of Acceptance, the manufacturer's installation recommendations and the requirements of the Florida Building Code.
2. Metal studs on to which Allura Fiber Cement Planks will be installed shall be designed by a Registered Professional Engineer or Licensed Architect per the F.B.C. and the requirements of this N.O.A.
3. Planks are to be installed horizontally commencing from the bottom course of a wall with 1-1/4" wide laps at the top of the plank. The vertical joints must be over framing members. Optional PVC butt joint inserts are used for on-stud jointing.
4. Planks are to be installed over 5/8" CDX grade APA rated plywood supported by 20 gage x 3-5/8" x 1-3/8" steel studs spaced a maximum of 16" o.c.
5. Allura fiber cement planks shall be fastened through the overlapping planks with ITW Buildex Hi-Lo Rock-On #9 x 2-1/4" x 0.395 HD corrosion resistant ribbed bugle screws.
6. The fasteners shall be placed in the overlapping area ≤ 8" o.c. vertically and 16" o.c. horizontally through the plywood sheathing into the studs. Screws shall have a minimum edge distance of 3/4".

Jose' C. Mitrani P.E.
10542 S.W. 128 Place
Miami, Florida 33186
Fla. Reg. # PE 19943

Steve Phelps Allura Plant Engineer
1149 ABTco Road North Wilkesboro NC 28659

REVISION	DATE	BY	DESCRIPTION
C	08/29/02	RA	BCCO 7/31/2002 REVIEW
D	04/01/08	NJS	Rev. 2007 FBC
E	02/11/15	SP	Name Change from CertainTeed to Allura

02/19/15

allura
15055 Woodham Drive
Houston, Texas 77073

TITLE: FIBER CEMENT PLANK INSTALLATION DETAILS
STEEL STUD CONSTRUCTION

DATE: 01/24/02 | DRAWN BY: B. SHAW

SHEET: 3 OF: 8 | DRAWING NUMBER: 10SBC00164B0002-E

SCALE: NONE

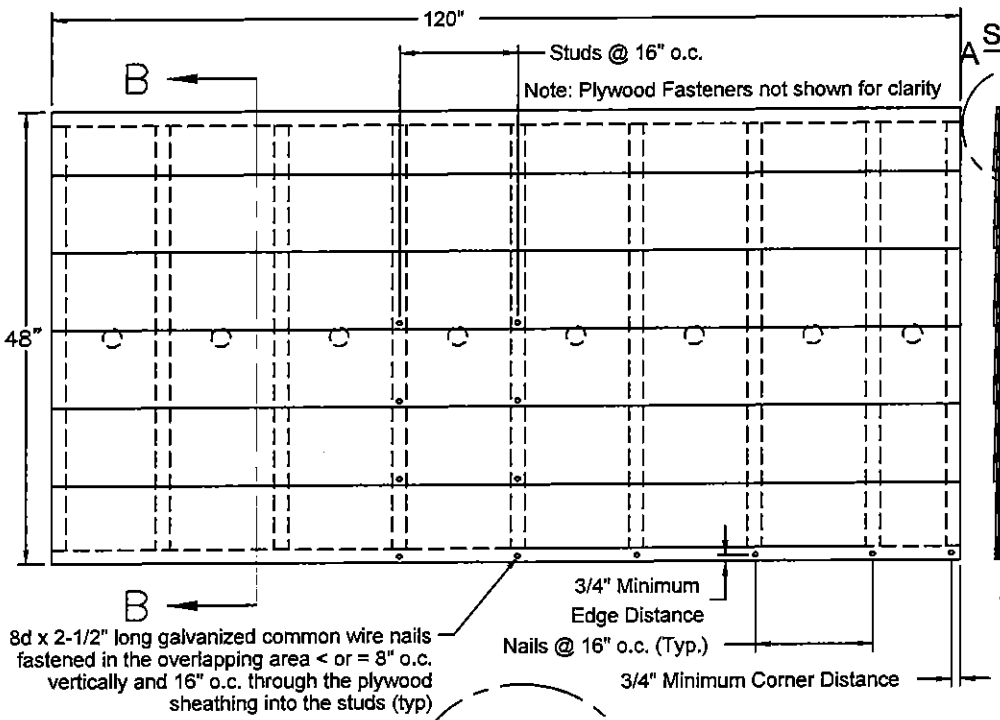

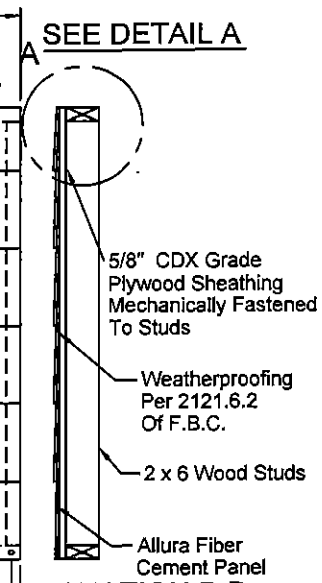

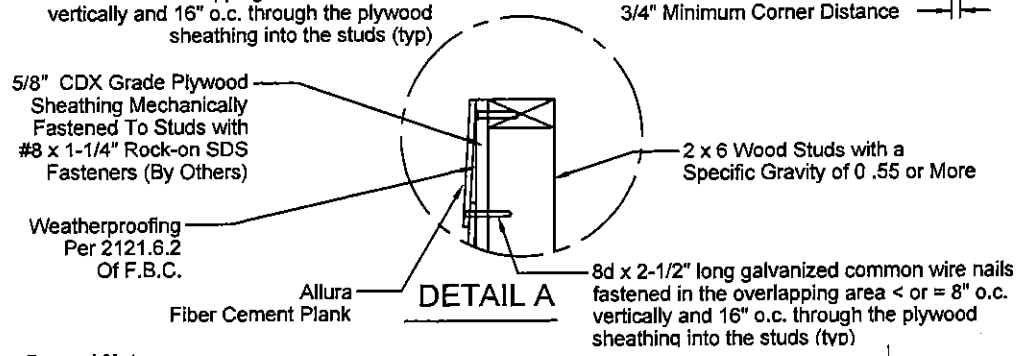

General Notes

1. Wall receiving Fiber Cement Planks shall be checked for structural adequacy (By Others)
2. Walls shall be weather proofed with the equivalent of 15 pound felt as described in section 2121.6.2 of the F.B.C.

Product Description

Allura plank material is a non-asbestos fiber Cement product tested in accordance with ASTM C-1185 and meeting the requirements of the Florida Building Code.

PRODUCT REVISED as complying with the Florida Building Code Acceptance No 14-1022.03 Expiration Date 04/24/2018 By [illegible] Miami Dade Product Control

Plank Dimensions

Width	Length	Thickness
≤ 9-1/2"	12'	5/16"

Design Pressure Rating

Installation:	Design Pressure:
Wood Studs	-91 PSF

Impact Resistant - Planks installed over 5/8" plywood sheathing

Installation Notes

1. All installation shall be done in conformance with this Notice of Acceptance, the manufacturer's installation recommendations and the requirements of the Florida Building Code.
2. Wood studs on to which Allura Fiber Cement Planks will be installed shall be designed by a Registered Professional Engineer or Licensed Architect per the F.B.C. and the requirements of this N.O.A.
3. Planks are to be installed horizontally commencing from the bottom course of a wall with 1-1/4" wide laps at the top of the plank. The vertical joints must be over framing members. Optional PVC butt joint inserts are used for on-stud jointing.
4. Planks are to be installed over 5/8" CDX grade APA rated plywood supported by 2 x 6 Wood studs with a specific gravity of 0.55 or more spaced a maximum of 16" o.c.
5. Allura fiber cement planks shall be fastened through the overlapping planks with 8d x 2-1/2" long galvanized common wire nails.
6. The fasteners shall be placed in the overlapping area ≤ 8" o.c. vertically and 16" o.c. horizontally through the plywood sheathing into the studs. Screws shall have a minimum edge distance of 3/4".

Jose' D. Mitrani P.E.
10642 S.W. 129 Place
Miami, Florida 33186
Fla. Reg. # PE 19843

Steve Phelps Allura Plant Engineer
1149 ABTco Road North Wilkesboro, NC 28659

REVISION	DATE	BY	DESCRIPTION
C	08/29/02	RA	BCCO 7/31/2002 REVIEW
D	04/01/09	NJS	Rev. 2007 FBC
	01/19/15	SP	Name Change from CertainTeed to Allura

allura Plycem USA LLC. 15055 Woodham Drive Houston, Texas 77073

TITLE: FIBER CEMENT PLANK INSTALLATION DETAILS WOOD STUD CONSTRUCTION

DATE: 01/24/02 | DRAWN BY: B. SHAW

SHEET: 4 OF: 8 | DRAWING NUMBER: 10SBC00164B0003-E

SCALE: NONE

02/19/15

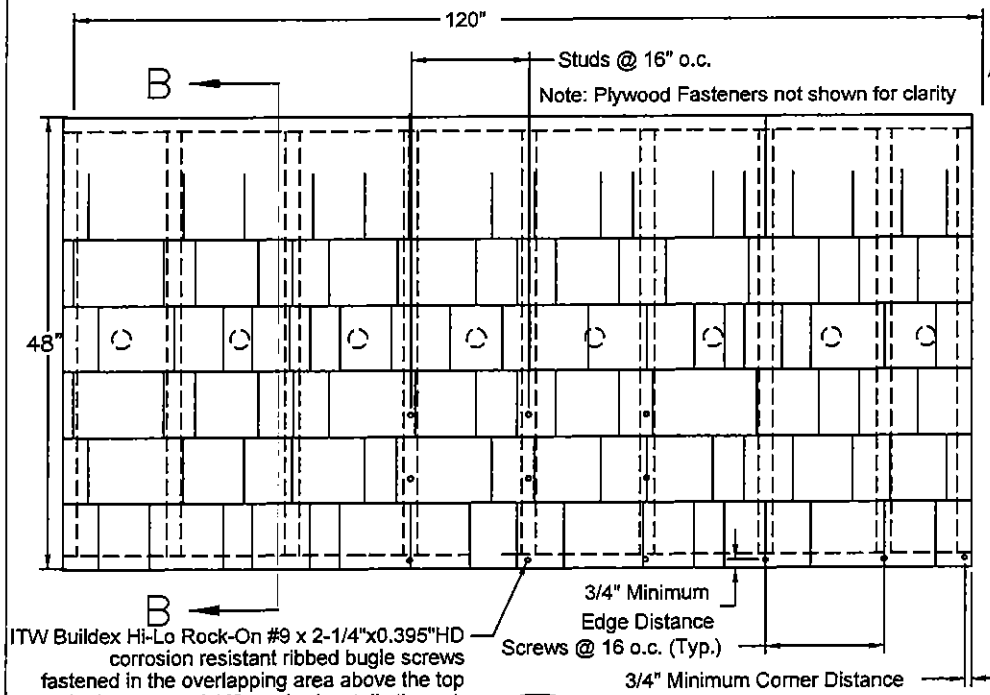

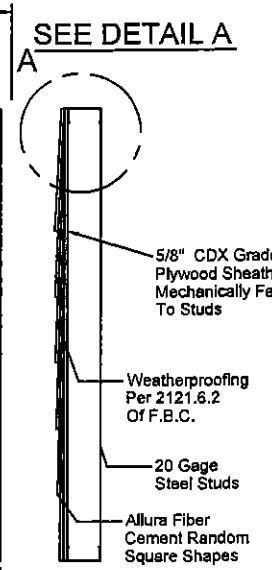

SECTION B-B

PRODUCT REVISED
as complying with the Florida Building Code
Acceptance No 14-1022.03
Expiration Date 04/24/2018
By _____
Miami-Dade Product Control

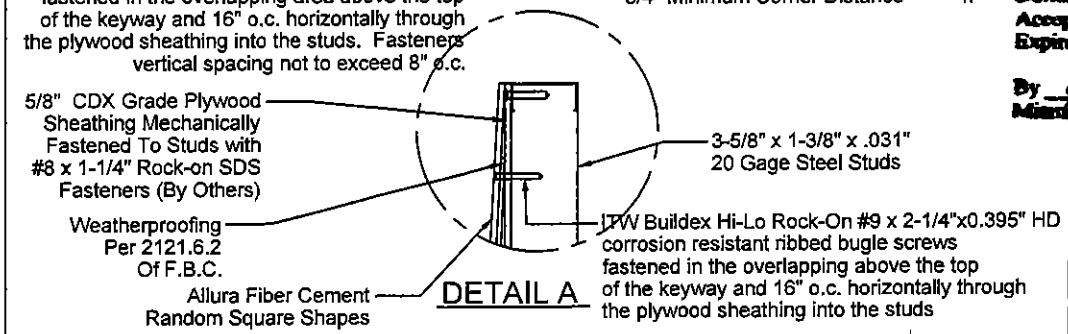

DETAIL A

Product Description

Allura random square material is a non-asbestos Fiber Cement product tested in accordance with ASTM C-1185 and meeting the requirements of the Florida Building Code.

Plank Dimensions

Width	Length	Thickness
16"	4'	5/16"

Design Pressure Rating

Installation on:	Design Pressure:
Steel Studs	-95 PSF

Impact Resistant - Planks installed over 5/8" plywood sheathing

Installation Notes

1. All installation shall be done in conformance with this Notice of Acceptance, the manufacturer's installation recommendations and the requirements of the Florida Building Code.
2. Metal studs on to which Allura Fiber Cement Random Square Shapes will be installed shall be designed by a Registered Professional Engineer or Licensed Architect per the F.B.C. and the requirements of this N.O.A.
3. Random Square Shapes are to be installed horizontally commencing from the bottom course of a wall. The vertical joints must be over framing members. Overlap dimension is 9".
4. Random Square Shapes are to be installed over 5/8" CDX grade APA rated plywood supported by 20 gage x 3-5/8" x 1-3/8" steel studs spaced a maximum of 16" o.c.
5. Allura Fiber Cement Random Shapes shall be fastened through the overlapping planks with ITW Buildex Hi-Lo Rock-On #9 x 2-1/4" x 0.395" HD corrosion resistant ribbed bugle screws.
6. The fasteners shall be placed in the overlapping area above the top of the keyway and 16" o.c. horizontally through the plywood sheathing into the studs. Screws shall have a minimum edge distance of 3/4". Vertical spacing not to exceed 8" o.c.

General Notes

1. Wall receiving Fiber Cement Random Square Shapes shall be checked for structural adequacy (By Others)
2. Walls shall be weather proofed with the equivalent of 15 pound felt as described in section 2121.6.2 of the F.B.C.

Jose' D. Mitrani P.E.
10542 S.W. 128 Place
Miami, Florida 33186
Fla. Reg. # PE 19943

Steve Phelps Allura Plant Engineer
1149 ABTco Road North Wilkesboro, NC 28659

REVISION	DATE	BY	DESCRIPTION
C	08/29/02	RA	BCCO 7/31/2002 REVIEW
D	04/01/08	NJS	Rev. 2007 FBC
E	01/19/15	SP	Name Change from CertainTeed to Allura

02/19/15

allura Plycem USA LLC.
15055 Woodham Drive
Houston, Texas 77073

TITLE: FIBER CEMENT RANDOM SQUARE SHAPES INSTALLATION DETAILS: STEEL STUD CONSTRUCTION

DATE: 01/24/02 | DRAWN BY: B. SHAW

SHEET: 5 OF: 8 | DRAWING NUMBER: 10SBC00164B0004-E

SCALE: NONE

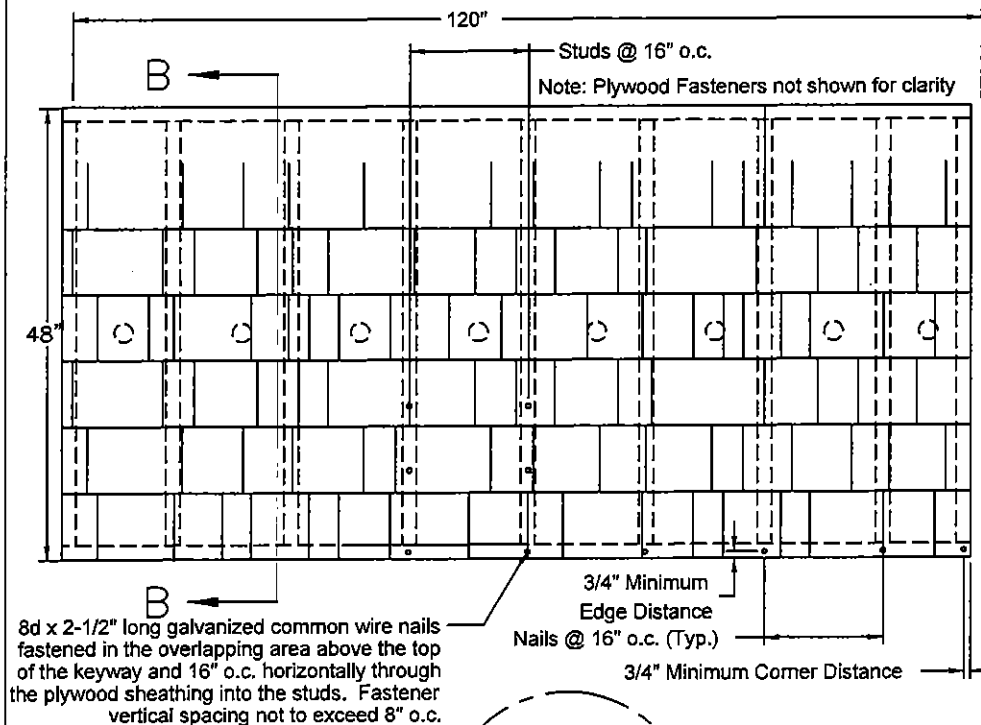

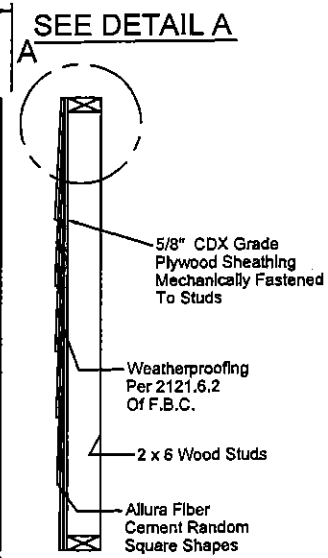

SECTION B-B

PRODUCT REVISED
as complying with the Florida Building Code
Acceptance No 14-1022.03
Expiration Date 04/24/2018
By [signature]
Miami Dade Product Control

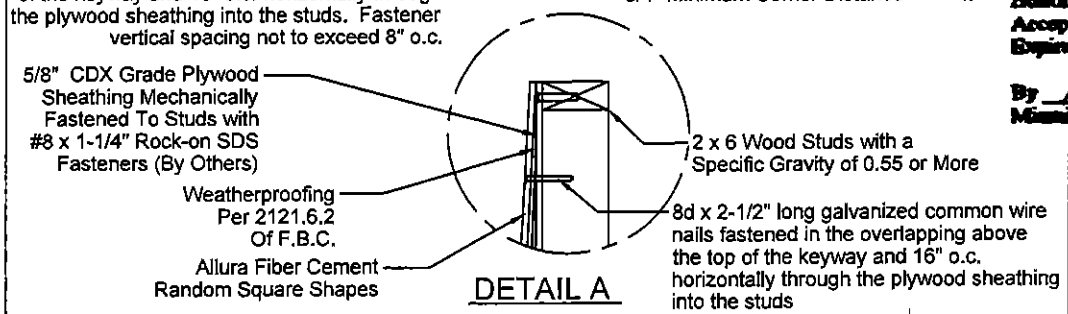

DETAIL A

Product Description

Allura random square material is a non-asbestos Fiber Cement product tested in accordance with ASTM C-1185 and meeting the requirements of the Florida Building Code.

Plank Dimensions

Width	Length	Thickness
16"	4'	5/16"

Design Pressure Rating

Installation on:	Design Pressure:
Wood Studs	-91 PSF

Impact Resistant - Planks installed over 5/8" plywood sheathing

Installation Notes

1. All installation shall be done in conformance with this Notice of Acceptance, the manufacturer's installation recommendations and the requirements of the Florida Building Code.
2. Wood studs on to which Allura Fiber Cement Random Square Shapes will be installed shall be designed by a Registered Professional Engineer or Licensed Architect per the F.B.C. and the requirements of this N.O.A.
3. Random Square Shapes are to be installed horizontally commencing from the bottom course of a wall. The vertical joints must be over framing members. Overall dimension is 9".
4. Random Square Shapes are to be installed over 5/8" CDX grade APA rated plywood supported by 2 x 6 wood studs with a specific gravity of 0.55 or more spaced a maximum of 16" o.c.
5. Random Square Shapes shall be fastened through the overlapping planks with 8d x 2-1/2" galvanized common wire nails.
6. The fasteners shall be placed in the overlapping area above the top of the keyway and 16" o.c. horizontally through the plywood sheathing into the studs. Screws shall have a minimum edge distance of 3/4". Vertical spacing not to exceed 8" o.c.

General Notes

1. Wall receiving Fiber Cement Random Square Shapes shall be checked for structural adequacy (By Others)
2. Walls shall be weather proofed with the equivalent of 15 pound felt as described in section 2121.6.2 of the F.B.C.

Jose' D. Mitrani P.E.
10842 S.W. 129 Place
Miami, Florida 33186
Fla. Reg. #PE 19843

Steve Phelps Allura Plant Engineer
1146 ABTec Road North Williamsboro, NC 28089

REVISION	DATE	BY	DESCRIPTION
C	08/29/02	RA	BCCO 7/31/2002 REVIEW
D	04/01/08	NJS	Rev. 2007 FBC
E	02/12/15	SP	Name Change from CertainTeed to Allura

02/19/15

allura Plycem USA LLC.
15055 Woodham Drive
Houston, Texas 77073

TITLE: FIBER CEMENT RANDOM SQUARE SHAPES INSTALLATION DETAILS: WOOD STUD CONSTRUCTION

DATE: 01/24/02	DRAWN BY: B. SHAW
SHEET: 6 OF: 8	DRAWING NUMBER: 10SBC00164B0005-E
SCALE: NONE	

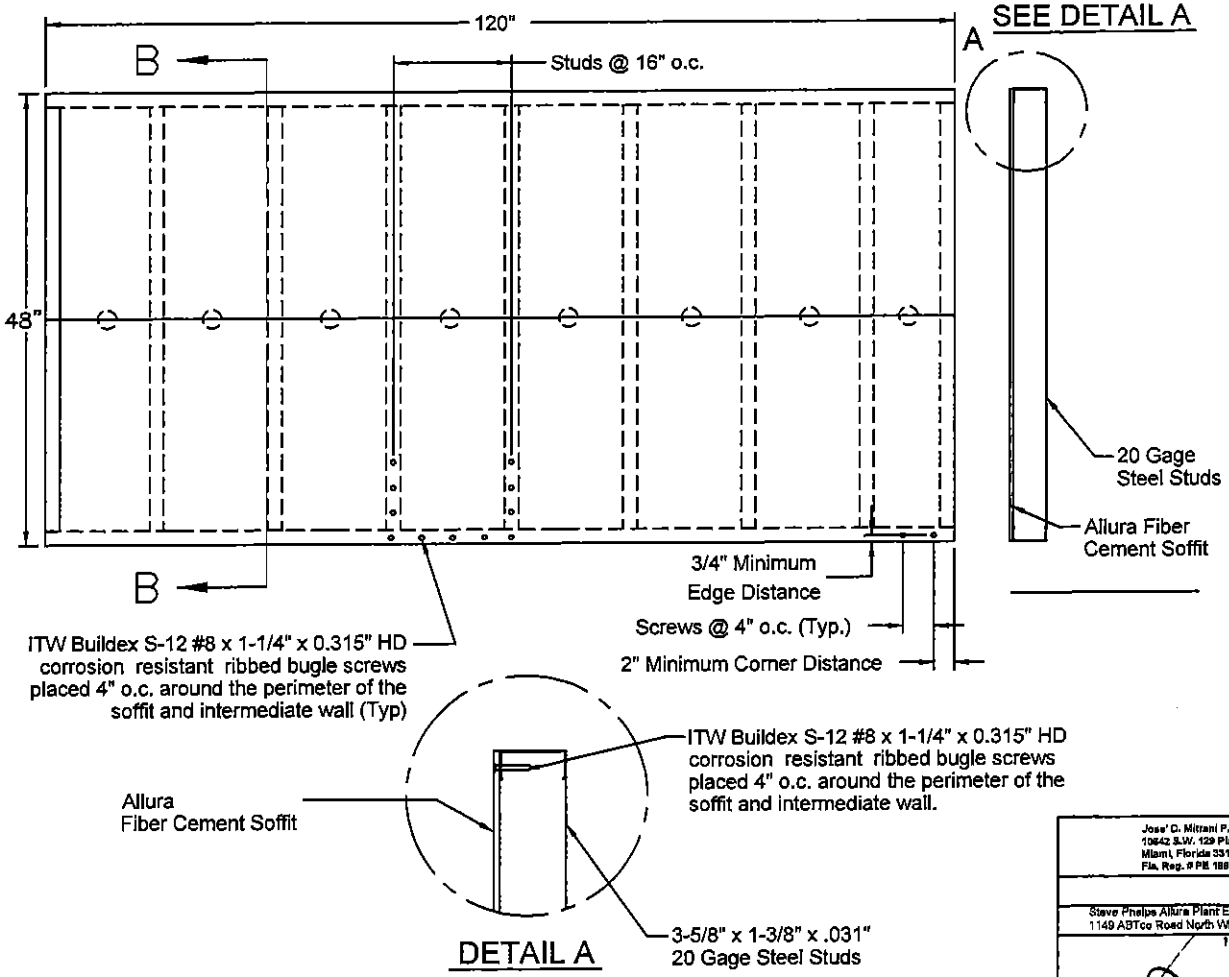

Product Description

Allura Soffit material is a non-asbestos fiber Cement product tested in accordance with ASTM C-1185 and meeting the requirements of the Florida Building Code

PRODUCT REVISED
as complying with the Florida Building Code
Acceptance No 14-1022.03
Expiration Date 04/24/2018
By [signature]
Miami Dade Product Control

Soffit Dimensions

Width	Length	Thickness
≤ 24"	12'	5/16"

Design Pressure Rating

Installation in:	Design Pressure:
Steel Studs	-70 PSF

Installation Notes

1. All installation shall be done in conformance with this Notice of Acceptance, the manufacturer's installation recommendations and the requirements of the Florida Building Code.
2. Metal studs on to which Allura Fiber Cement Soffit will be installed shall be designed by a Registered Professional Engineer or Licensed Architect per the F.B.C. and the requirements of this N.O.A.
3. Soffits are to be installed over 20 gage x 3-5/8" x 1-3/8" steel studs spaced a maximum of 16" o.c.
4. Allura Fiber Cement Soffit shall be fastened with ITW Buildex S-12 #8 x 1-1/4" x 0.315" HD corrosion resistant ribbed bugle screws.
5. Fasteners shall be placed 4" o.c. around the perimeter of the panel and intermediate wall. All joints shall be over studs, screws shall have a minimum edge distance of 3/4" and minimum clearance of 2" from the corners.

General Notes

1. Studs receiving Fiber Cement Soffit shall be checked for structural adequacy (By Others)

Jose' D. Mitrani P.E.
10642 S.W. 129 Place
Miami, Florida 33186
Fla. Reg. # PE 18643

Steve Phelps Allura Plant Engineer
1149 ABTco Road North Wilkesboro, NC 28659

REVISION	DATE	BY	DESCRIPTION
C	08/29/02	RA	BCCO 7/31/2002 REVIEW
D	04/01/08	NJS	Rev. 2007 FBC
E	02/12/15	SP	Name Change from CertainTeed to Allura

02/9/15

allura
Plycem USA LLC.
15055 Woodham Drive
Houston, Texas 77073

TITLE: FIBER CEMENT SOFFIT INSTALLATION DETAILS
STEEL STUD CONSTRUCTION

DATE: 01/24/02
DRAWN BY: B. SHAW
SHEET: 7 OF: 8
DRAWING NUMBER: 10SBC00164B0006-E
SCALE: NONE

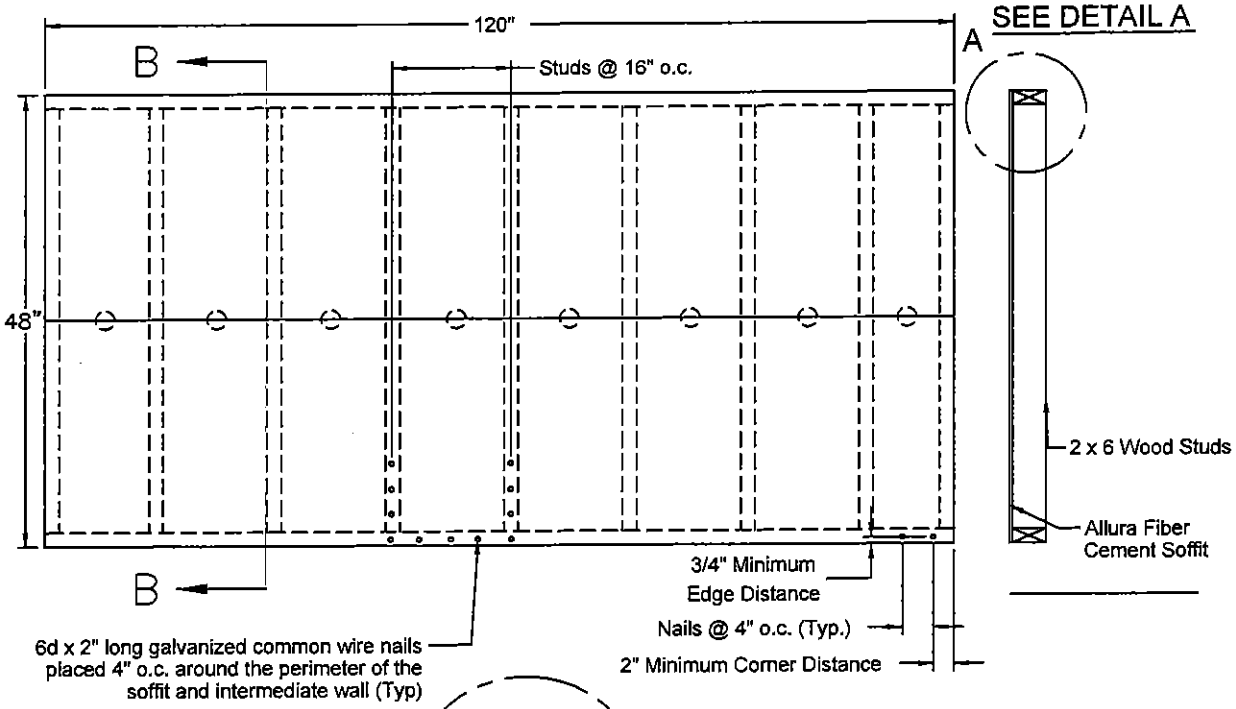

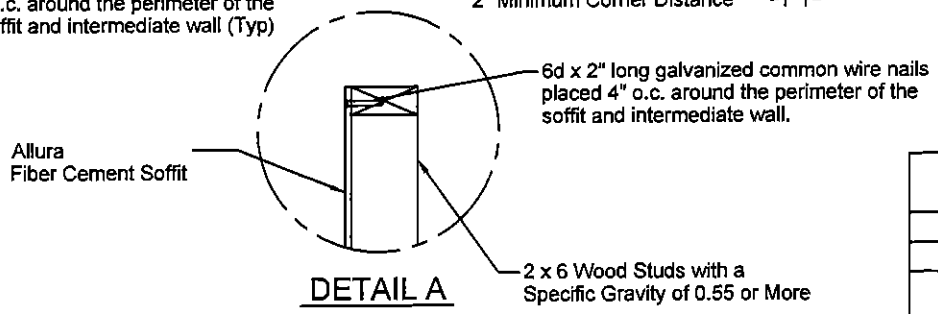

DETAIL A

Product Description

Allura Soffit material is a non-asbestos fiber Cement product tested in accordance with ASTM C-1185 and meeting the requirements of the Florida Building Code

Soffit Dimensions

Width	Length	Thickness
≤ 24"	12'	5/16"

Design Pressure Rating

Installation on:	Design Pressure:
Wood Studs	-70 PSF

PRODUCT REVISED
as complying with the Florida Building Code
Acceptance No 14-1022.03
Expiration Date 04/24/2018
By
Miami-Dade Product Control

Installation Notes

1. All installation shall be done in conformance with this Notice of Acceptance, the manufacturer's installation recommendations and the requirements of the Florida Building Code.
2. Wood studs on to which Allura Fiber Cement Soffit will be installed shall be designed by a Registered Professional Engineer or Licensed Architect per the F.B.C. and the requirements of this N.O.A.
3. Soffits are to be installed over 2 x 6 wood studs with a specific gravity of 0.55 or more spaced a maximum of 16" o.c.
4. Allura Fiber Cement Soffit shall be fastened with 6d x 2" long galvanized common wire nails.
5. Fasteners shall be placed 4" o.c. around the perimeter of the panel and intermediate wall. All joints shall be over studs, screws shall have a minimum edge distance of 3/4" and minimum clearance of 2" from the corners.

General Notes

1. Studs receiving Fiber Cement Soffit shall be checked for structural adequacy (By Others)

Jose' D. Mitrani P.E.
10642 S.W. 129 Place
Miami, Florida 33186
Fla. Reg. # PE 18943

Steve Phelps Allura Plant Engineer
1148 ABTco Road North Wilkesboro, NC 28659

02/19/15

REVISION	DATE	BY	DESCRIPTION
C	08/29/02	RA	BCCO 7/31/2002 REVIEW
D	04/01/08	NJS	Rev. 2007 FBC
E	02/12/15	SP	Name Change from CertainTeed to Allura

allura Plycem USA LLC.
15055 Woodham Drive
Houston, Texas 77073

TITLE: FIBER CEMENT SOFFIT INSTALLATION DETAILS WOOD STUD CONSTRUCTION

DATE: 01/24/02
DRAWN BY: B. SHAW
SHEET: 8 OF: 8
DRAWING NUMBER: 10SBC00164B0007-E
SCALE: NONE